INSTRUCTION MANUAL

MODEL 148A
20 MHz
AM/FM/PM GENERATOR
(with Option 001)

© - 1982 - Wavetek

THIS DOCUMENT CONTAINS INFORMATION PROPRIETARY TO WAVETEK AND IS SOLELY FOR INSTRUMENT OPERATION AND MAINTENANCE. THE INFORMATION IN THIS DOCUMENT MAY NOT BE DUPLICATED IN ANY MANNER WITHOUT THE PRIOR APPROVAL IN WRITING OF WAVETEK.

WAVETEK®

SAN DIEGO

9045 Balboa Ave., San Diego, CA 92123
P.O. Box 651, San Diego, Calif. 92112
Tel 714/279-2200 TWX 910-335-2007

Manual Revision 8/82

www.valuetronics.com

WARRANTY

All Wavetek instruments are warranted against defects in material and workmanship for a period of one year after date of manufacture. Wavetek agrees to repair or replace any assembly or component (except batteries) found to be defective, under normal use, during this period. Wavetek's obligation under this warranty is limited solely to repairing any such instrument which in Wavetek's sole opinion proves to be defective within the scope of the warranty when returned to the factory or to an authorized service center. Transportation to the factory or service center is to be prepaid by purchaser. Shipment should not be made without prior authorization by Wavetek.

This warranty does not apply to any products repaired or altered by persons not authorized by Wavetek, or not in accordance with instructions furnished by Wavetek. If the instrument is defective as a result of misuse, improper repair, or abnormal conditions or operations, repairs will be billed at cost.

Wavetek assumes no responsibility for its product being used in a hazardous or dangerous manner either alone or in conjunction with other equipment. High voltage used in some instruments may be dangerous if misused. Special disclaimers apply to these instruments. Wavetek assumes no liability for secondary charges or consequential damages and, in any event, Wavetek's liability for breach of warranty under any contract or otherwise, shall not exceed the purchase price of the specific instrument shipped and against which a claim is made.

Any recommendations made by Wavetek for use of its products are based upon tests believed to be reliable, but Wavetek makes no warranty of the results to be obtained. This warranty is in lieu of all other warranties expressed or implied, and no representative or person is authorized to represent or assume for Wavetek any liability in connection with the sale of our products other than set forth herein.

www.valuetronics.com

CONTENTS

SECTION 1 GENERAL DESCRIPTION — **Page**

1.1 THE MODEL 148A . . . 1-1
1.2 SPECIFICATIONS . . . 1-1
1.2.1 Main Generator . . . 1-1
1.2.1.1 Waveforms . . . 1-1
1.2.1.2 Operational Modes . . . 1-1
1.2.1.3 Modulation Modes . . . 1-1
1.2.1.4 Frequency Range . . . 1-2
1.2.1.5 Function Output (50Ω) . . . 1-2
1.2.1.6 Adjustable Waveform Start/Stop Point . . . 1-2
1.2.1.7 DC Output and DC Offset . . . 1-2
1.2.1.8 External Modulation Input . . . 1-2
1.2.1.9 Symmetry . . . 1-2
1.2.1.10 Sync Output (TTL) . . . 1-2
1.2.1.11 Trigger and Gate . . . 1-2
1.2.1.12 Frequency Precision . . . 1-3
1.2.1.13 Amplitude Precision . . . 1-3
1.2.1.14 Waveform Characteristics . . . 1-3
1.2.1.15 External Sync Input . . . 1-3
1.2.3 Modulation Generator . . . 1-3
1.2.2.1 Waveforms . . . 1-3
1.2.2.2 Frequency Range . . . 1-3
1.2.2.3 Output (600Ω) . . . 1-3
1.2.2.4 Frequency Modulation (FM IN) . . . 1-3
1.2.2.5 Waveform Characteristics . . . 1-3
1.2.4 General . . . 1-3
1.2.3.1 Stability (for amplitude, dc offset and frequency) . . . 1-3
1.2.3.2 Environmental . . . 1-3
1.2.3.3 Dimensions . . . 1-3
1.2.3.4 Weight . . . 1-3
1.2.3.5 Power . . . 1-3
1.3 ITEMS FURNISHED . . . 1-4
1.4 ITEMS REQUIRED . . . 1-4
1.5 TOOLS AND TEST EQUIPMENT . . . 1-3

SECTION 2 INITIAL PREPARATION

2.1 MECHANICAL INSTALLATION . . . 2-1
2.2 ELECTRICAL INSTALLATION . . . 2-1
2.2.1 Power Connection . . . 2-1
2.2.2 Signal Connections . . . 2-1
2.3 ELECTRICAL ACCEPTANCE CHECKOUT . . . 2-1
2.4 PREP FOR RESHIPMENT . . . 2-7
2-5 PREP FOR STORAGE . . . 2-7

SECTION 3 OPERATION

3.1 CONTROLS AND CONNECTORS . . . 3-1
3.1.1 Main Generator . . . 3-1
3.1.2 Modulation Generator . . . 3-3
3.1.3 Rear Panel Connector . . . 3-3

www.valuetronics.com

CONTENTS (Continued)

3.2 OPERATION 3-3
3.2.1 Continuous Operation 3-3
3.2.2 Triggered Operation 3-3
3.2.3 Gated Operation 3-4
3.2.4 Manual Triggering and Gating 3-4
3.2.5 AM Operation 3-4
3.2.6 FM Operation 3-4
3.2.7 Sweep Operation 3-5
3.2.8 PM Operation 3-5

SECTION 4 CIRCUIT DESCRIPTION

4.1 FUNCTIONAL BLOCK DIAGRAM ANALYSIS 4-1
4.2 CIRCUIT ANALYSIS 4-3
4.2.1 VCG Amplifier 4-3
4.2.2 Symmetry Control 4-3
4.2.3 Range Switching 4-3
4.2.4 Capacitance Multiplier 4-5
4.2.5 Triangle Amplifier 4-5
4.2.6 Hysteresis Switch 4-5
4.2.7 Diode Gate and Timing Capacitor 4-5
4.2.8 Triangle Buffer 4-6
4.2.9 Signal Shaper 4-6
4.2.10 Transconductance Multiplier 4-6
4.2.11 Preamplifier 4-6
4.2.12 Output Amplifier 4-6
4.2.13 Sync Amplifier/Square Amplifier 4-8
4.2.14 Trigger Signal Limiter 4-8
4.2.15 Trigger Logic/Trigger Amplifier 4-8
4.2.16 Baseline Compensation 4-9
4.2.17 Modulation Generator and Ramp Generator 4-9

SECTION 5 CALIBRATION

5.1 FACTORY REPAIR 5-1
5.2 REQUIRED TEST EQUIPMENT 5-1
5.3 REMOVING GENERATOR COVERS 5-1
5.4 CALIBRATION 5-1

SECTION 6 MAINTENANCE

6.1 ROUTINE MAINTENANCE 6-1
6.1.1 Cleaning 6-1
6.1.2 Inspection 6-1
6.2 REPAIR 6-1
6.2.1 Repair and Replacement 6-1
6.2.2 Factory Repair 6-1
6.2.3 Disassembly 6-1
6.2.4 Reassembly 6-1
6.3 TROUBLESHOOTING 6-2
6.4 TROUBLESHOOTING INDIVIDUAL COMPONENTS 6-2
6.4.1 Transistor 6-2

www.valuetronics.com

CONTENTS (Continued)

6.4.2 Diode 6-2
6.4.3 Operational Amplifier 6-2
6.4.4 FET Transistor 6-2
6.4.5 Capacitor 6-2

SECTION 7 PARTS AND SCHEMATICS

7.1 DRAWINGS 7-1
7.2 ORDERING PARTS 7-1
7.3 ADDENDA 7-1

www.valuetronics.com

LIST OF ILLUSTRATIONS

Figure		Page
2-1	Voltage Selector and Fuse	2-1
2-2	Initial Setup	2-2
3-1	Controls and Connectors	3-1
3-2	Minimum Trigger Signal	3-2
3-3	Waveform Start/Stop Examples	3-4
3-4	Frequency Modulation Nomograph	3-5
4-1	Functional Block Diagram	4-0
4-2	Basic Generator Block and Timing Diagram	4-1
4-3	VCG Simplified Schematic	4-4
4-4	Simplified Output Amplifier	4-7
5-1	Suppressed Carrier	5-4
5-2	Modulation Linearization	5-5
5-3	Carrier Balance	5-5
5-4	Auxiliary Generator Calibration Point Location	5-5
5-5	Main Generator Calibration Point Location	5-6

Drawing	
0004-00-0176	Instrument Schematic
0102-00-0903	Chassis Assembly
1101-00-0903	Chassis Parts List
0103-00-0872	Main Board Schematic
0101-00-0872	Main Board Assembly
1100-00-0872	Main Board Parts List
0102-00-0039	Switch Assemblies
1202-00-0039	Switch Assemblies Parts Lists
0103-00-0811	Auxiliary Board Schematic
0101-00-0811	Auxiliary Board Assembly
1100-00-0811	Auxiliary Board Parts List
0102-00-0040	Switch Assemblies
1202-00-0040	Switch Assemblies Parts Lists

NOTE

Drawings are in this order at the back of the manual.

www.valuetronics.com

LIST OF TABLES

Table		Page
2-1	Initial Checkout	2-2
5-1	148A Alignment	5-2
6-1	Fault Isolation	6-1
6-2	Power Supplies	6-3
6-3	Function Generator Loop	6-4
6-4	Output Amplifier	6-4
6-5	Waveform Generator	6-5
6-6	Triangle Amplifiers	6-6
6-7	Square Wave Generator	6-6
6-8	Sync Circuits	6-7
6-9	VCG Summing Amplifier	6-7
6-10	VCG Current Sources	6-7
6-11	VCG Amplifiers	6-9
6-12	Capacitance Multipliers	6-9
6-13	Trigger Circuitry	6-10
6-14	Modulation Generator	6-11
6-15	AM, FM, PM Circuits	6-12

www.valuetronics.com

SAFETY

This instrument is wired for earth grounding via the facility power wiring. Do not bypass earth grounding with two wire extension cords, plug adapters, etc.

BEFORE PLUGGING IN the instrument, comply with installation instructions.

MAINTENANCE may require power on with the instrument covers removed. This should be done only by qualified personnel aware of the electrical hazards.

The instrument power receptical is connected to the instrument safety earth terminal with a green/yellow wire. Do not alter this connection. (Reference: ⏚ or ⚠ stamped inside the rear panel near the safety earth terminal.)

WARNING notes call attention to possible injury or death hazards in subsequent operations.

CAUTION notes call attention to possible equipment damage in subsequent operations.

www.valuetronics.com

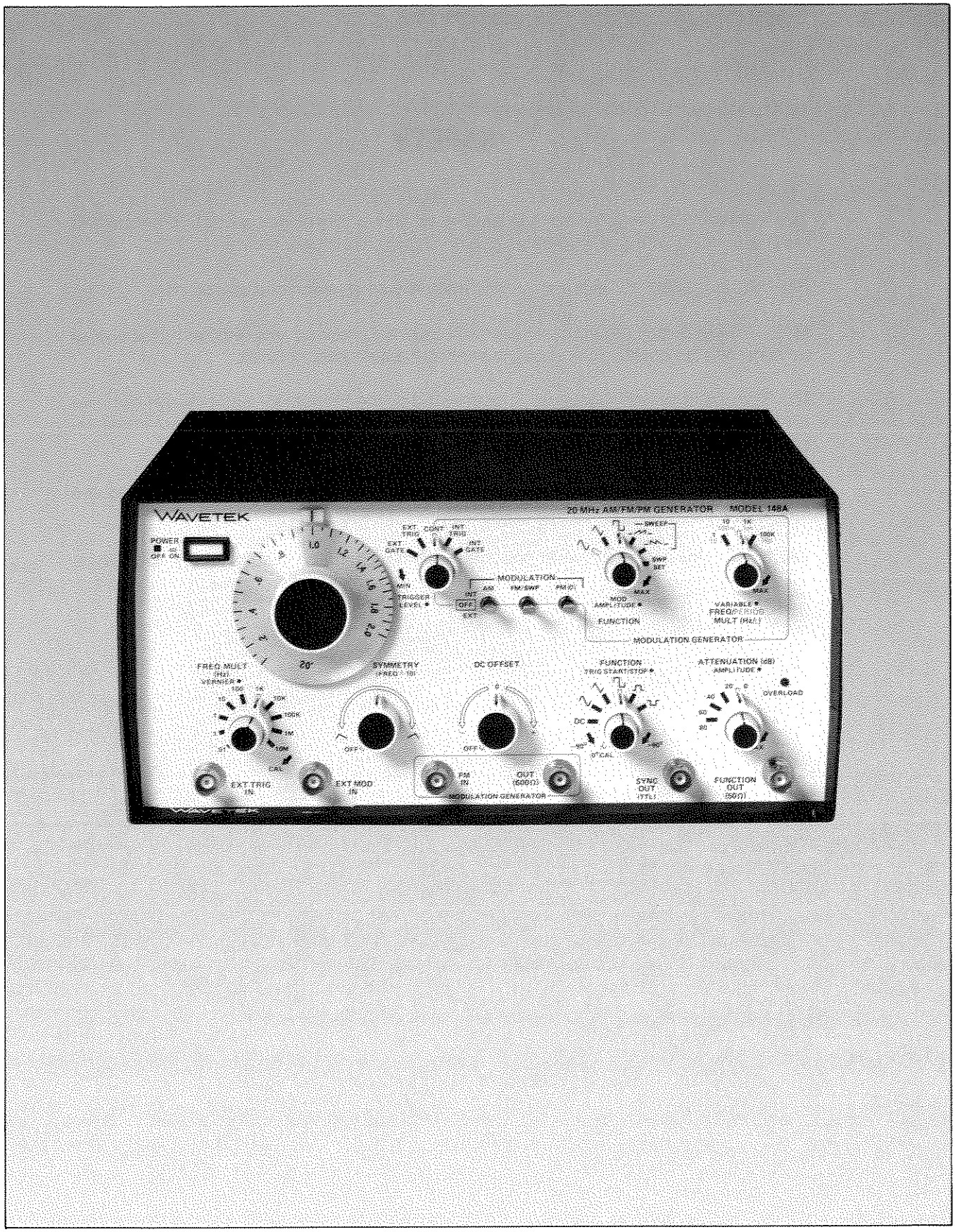

Model 148A 20MHz AM/FM/PM Generator

X

www.valuetronics.com

SECTION 1
GENERAL DESCRIPTION

1.1 THE MODEL 148A

Wavetek Model 148A, 20 MHz AM/FM/PM Generator is a precision source of sine, triangle, square, ramp and pulse waveforms plus dc voltage. The waveforms may be controlled in symmetry as well as amplitude and dc offset. A built-in modulation generator can modulate frequency, phase and amplitude or modulation may be by an external source.

The generator may be run in continuous mode or triggered for a single pulse or gated for a burst of pulses. Triggering and gating may be by the Model 148 built-in modulation generator or by an external source. The triggered and gated waveform start/stop point is selectable from −90° through +90°. Start/stop control plus dc offset control gives haverwave capability.

The main output of waveforms may be attenuated and offset. A TTL sync pulse is available at main generator frequencies, and the modulation generator waveforms are available at fixed amplitudes.

Frequency of both the main generator and the modulation generator can be manually controlled at the front panel or electrically controlled by external voltages.

An external sync input (Option 001) located on the rear panel allows the instrument to be synchronized to an external signal source.

1.2 SPECIFICATIONS

1.2.1 Main Generator

1.2.1.1 Waveforms

Selectable sine ∿, triangle ∿, square ⊓⊔, positive square ⎍, negative square ⊔⊓ and dc. A TTL sync pulse is provided on a separate output connector. All can be produced with variable symmetry, amplitude and dc offset.

1.2.1.2 Operational Modes

Continuous: Generator oscillates continuously at the selected frequency.

External Trigger: Generator is quiescent until triggered by an external signal, then generates one cycle at the selected frequency.

External Gate: Same as external trigger, except generator oscillates at the selected frequency for the duration of the positive state of the external signal plus the time to complete the last cycle.

Internal Trigger: Same as external trigger, except that the modulation generator is internally connected to the trigger input of the main generator.

Internal Gate: Same as external gate, except that the modulation generator is internally connected to the trigger input of the main generator.

1.2.1.3 Modulation Modes

Internal Modulation

Setting a front panel modulation switch in the INT position routes the selected modulation function from the modulation amplitude control to the selected modulating circuits of the main generator.

Amplitude Modulation (AM): ∿, ∿, ⊓⊔ modulation functions are used in this internal modulation mode. With modulation amplitude ccw, carrier at function output is not amplitude modulated and approximately half of normal (AM OFF) amplitude. Clockwise rotation of modulation amplitude results in increasing amplitude modulation of the carrier to at least 100% AM.

Frequency Modulation (FM) and Sweep: ⟋⟍ and ⟍⟋ modulation functions are used to linearly sweep the main generator frequency. The frequency dial sets the lower sweep limit and the modulation amplitude control determines the upper frequency limit (not to exceed 2.0 × multiplier). A sweep set mode allows precision setting of upper frequency limit. For frequency deviation, the dial determines the center frequency and modulator ∿, ∿ or ⊓⊔ varies the main generator frequency above and below center by an amount determined by the modulation amplitude.

www.valuetronics.com

Phase Modulation (PM): As in External Modulation. Amplitude of modulator ∿ , ∿ , ⊓⊔ functions varies phase up to ±50°.

External Modulation

A BNC feeds an external signal to the modulating circuits when selected by a front panel modulation toggle switch in the EXT position.

Amplitude Modulation (AM): External modulating signals with zero dc component produce suppressed carrier modulation; i.e., a carrier (at main generator function output) amplitude of zero. The function output modulated signal has an amplitude sensitivity of 3 volts peak (1.5 Vp into 50Ω) per volt peak in. A carrier signal level at the function output can be produced at a sensitivity of 3 Vp (1.5 Vp into 50Ω) per 1 Vp dc component in. Modulating the dc component modulates the carrier level. Percent modulation (AM) will be the ratio of the peak ac to peak dc of the modulating signal. Input impedance is >2.5 kΩ.

Frequency Modulation (FM) and Sweep: Sensitivity is 20% of frequency range/volt peak. Linear behavior results only when all instantaneous frequencies called for fall within the frequency range (2 × multiplier to 0.002 × multiplier). The instantaneous frequency called for is the multiplier and dial setting altered by the instantaneous voltage at the modulation input. Input impedance is 5 kΩ.

Phase Modulation (PM): Sensitivity is 10° phase shift/volt peak. Linear behavior results only when all instantaneous transition frequencies called for fall within the frequency range (2 × multiplier to 0.002 × multiplier).The instantaneous frequencies called for will depend heavily on the modulation frequency and waveform. Inoperative at frequency multiplier settings below 100. Input frequencies roll off at 6 dB/octave above one half of full range frequency and above 150 kHz. Input impedance is 10 kΩ.

1.2.1.4 Frequency Range

0.0002 Hz to 20 MHz in 10 overlapping ranges with approximately 1% vernier control.

1.2.1.5 Function Output (50Ω)

∿ , ∿ and ⊓⊔ selectable and variable to 30V p-p (15V p-p into 50Ω). ⎍ and ⎍ up to 15 Vp (7.5 Vp into 50Ω). All waveforms and dc can supply 150 mA peak current and may be attenuated to 60 dB in 20 dB steps. An additional 20 dB vernier also controls the waveform amplitudes.

1.2.1.6 Adjustable Waveform Start/Stop Point

Approximately −90° to +90° to 2 MHz (operative on sine and triangle waveforms only).

1.2.1.7 DC Output and DC Offset

Selectable through function output (50Ω). Controlled by front panel controls to a minimum of ±14.4 Vdc(±7.2 Vdc into 50Ω) with signal peak plus offset limited to ±15 Vdc (±7.5 Vdc into 50Ω). DC offset and wave form attenuated proportionately by the 60 dB output attenuator.

1.2.1.8 External Modulation Input

AM: Sensitivity of 3 Vp out/Vp (1.5V into 50Ω). Input impedance is >2.5 kΩ.
FM: Sensitivity of 20% of frequency range/Vp. Input impedance is 5 kΩ.
PM: Sensitivity of 10° phase shift/Vp. Input impedance is 10 kΩ.

1.2.1.9 Symmetry

Symmetry of all waveform outputs is continuously adjustable from 1:19 to 19:1. Varying symmetry provides variable duty-cycle pulses, sawtooth ramps and nonsymmetrical sine waves.

NOTE

When SYMMETRY control is used, indicated frequency is divided by approximately 10.

1.2.1.10 Sync Output (TTL)

TTL level pulse which will drive 10 TTL loads. Frequency and time symmetry are the same as for function output.

1.2.1.11 Trigger and Gate

Input Range: 1V p-p to ±10V.
Input Impedance: 10 kΩ, 33 pF.
Pulse Width: 25 ns minimum.
Repetition Rate: 10 MHz maximum.
Adjustable triggered signal start/stop point: approximately −90° to +90° to 2 MHz.

www.valuetronics.com

1.2.1.12 Frequency Precision

Dial Accuracy
±(1% of setting +1% of full range) on ×100 thru ×1M ranges.
±(2% of setting +2% of full range) on ×.01 thru ×10 and ×10M ranges.

Time Symmetry
±0.5% on ×100 thru ×100k ranges and from 0.2 to 2.0 on dial.
±5% on all other ranges and from 0.02 to 2.0 on dial.

1.2.1.13 Amplitude Precision

Amplitude Change With Frequency
Sine variation less than:
±0.1 dB thru ×100k ranges;
±0.5 dB on ×1M range;
±3 dB on ×10M range.

Step Attenuator Accuracy
±0.3 dB per 20 dB step at 2 kHz.

1.2.1.14 Waveform Characteristics

Sine Distortion
<0.5% on ×100 Hz to ×10 kHz.
<1.0% on ×.01 to ×10 Hz and ×100 kHz ranges.
All harmonics 30 dB below fundamental on ×1 MHz range.
All harmonics 26 dB below fundamental on ×10 MHz range.

Square Wave Rise/Fall Times
At FUNCTION OUT <25 ns for 15V p-p into a 50Ω load.

Triangle Distortion
Odd harmonics within 15% of correct value to 2 MHz.

1.2.1.15 External Sync Input (Option 001)

The external sync input requires a minimum signal level of 1 Vp-p and a maximum signal level of 20 Vp-p. Its input impedance is approximately 2 kΩ with 10 pF. The frequency of the external sync signal must be within 1% of the 148A's frequency setting.

1.2.2 Modulation Generator

1.2.2.1 Waveforms

Selectable sine ∿, triangle ∧, square ⊓, up ramp ⟋ and down ramp ⟍.

1.2.2.2 Frequency Range

∿, ∧, ⊓ 0.1 Hz to 100 kHz in three 100:1 ranges.
⟋, ⟍ Sweep: 0.2 Hz to 200 kHz (2 × setting).

1.2.2.3 Output (600Ω)

∿, ∧ and ⊓ are fixed level 10V p-p balanced about ground. ⟋ and ⟍ are fixed level 5 Vp from 0 to +5V.

1.2.2.4 Frequency Modulation (FM IN)

Voltage control of modulator frequency with sensitivity of 20% of range per volt. Input impedance is 5 kΩ.

1.2.2.5 Waveform Characteristics

Sine Distortion
<5%.

Time Symmetry
<1% from 1 Hz to 10 kHz.
<5% from 0.1 Hz to 100 kHz.

1.2.3 General

1.2.3.1 Stability (for amplitude, dc offset and frequency)

Short Term: ±0.05% for 10 minutes.
Long Term: ±0.25% for 24 hours.

1.2.3.2 Environmental

Temperature Range: 25°C ±5°C ambient for spec operation. 0°C to 50°C ambient for operation. −55°C to 75°C for storage.

Altitude sea level to 10,000 for operation. Sea level to 40,000 ft for storage.

Relative Humidity: <95% at 25°C and sea level (non-condensing).

1.2.3.3 Dimensions

28.6 cm (11¼ in.) wide; 13.3 cm (5¼ in.) high; 27.3 cm (10¾ in.) deep.

1.2.3.4 Weight

5 kg (11 lb) net; 6.6 kg (14½ lb) shipping.

www.valuetronics.com

1.2.3.5 Power

90 to 105V, 108 to 126V, 198 to 231V and 216 to 252V selectable; 48 to 400 Hz; less than 40 watts.

NOTE

Unless otherwise noted, all specifications apply from 0.1 to 2.0 on frequency dial when FUNCTION OUT is at maximum and 50Ω terminated, with SYMMETRY control at OFF. Symmetry and vernier affect frequency calibration. Maximum possible asymmetry is a function of frequency setting.

1.3 ITEMS FURNISHED

Model 148A Instruction Manual is furnished with the Model 148A.

1.4 ITEMS REQUIRED

Coaxial cables with BNC connectors are required, but not furnished, for the distribution of signals.

1.5 TEST EQUIPMENT AND TOOLS

Recommended test equipment for electrical acceptance checkout is described in paragraph 2.3

Recommended test equipment for troubleshooting and calibration is described in paragraph 5.2.

Only standard tools are required for maintenance and calibration.

www.valuetronics.com

SECTION 2
INITIAL PREPARATION

2.1 MECHANICAL INSTALLATION

After unpacking the instrument, visually inspect all external parts for possible damage to connectors, surface areas, etc. If damage is discovered, file a claim with the carrier who transported the unit. The shipping container and packing material should be saved in case reshipment is required.

2.2 ELECTRICAL INSTALLATION

2.2.1 Power Connection

NOTE

Unless otherwise specified at the time of purchase, this instrument was shipped from the factory with the power transformer connected for operation on a 120 Vac line supply and with a ½ amp fuse.

Conversion to other input voltages requires a change in rear panel fuse holder voltage card position and fuse (figure 2-1) according to the following procedure.

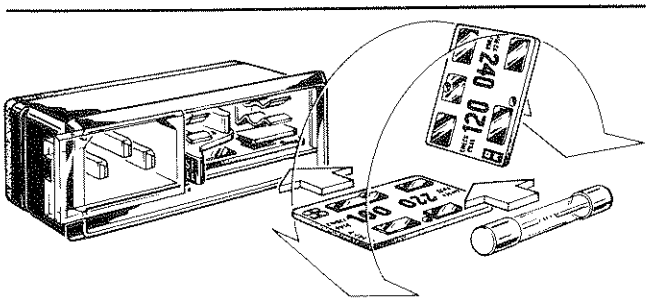

Figure 2-1. Voltage Selector and Fuse

1. Disconnect the power cord at the instrument, open fuse holder cover door and rotate fuse-pull to left to remove the fuse.
2. Remove the small printed circuit board and select operating voltage by orienting the printed circuit board to position the desired voltage to the top left side. Push the board firmly into its module slot.
3. Rotate the fuse-pull back into the normal position and insert the correct fuse into the fuse holder. Close the cover door.
4. Connect the ac line cord to the mating connector at the rear of the unit and the power source.

Card Position	Input Vac	Fuse
100	90 to 105	½ amp
120	108 to 126	½ amp
220	198 to 231	¼ amp
240	216 to 252	¼ amp

2.2.2 Signal Connections

Use RG58U 50Ω coaxial cables equipped with BNC connectors to distribute signals when connecting this instrument to associated equipment.

2.3 ELECTRICAL ACCEPTANCE CHECKOUT

This checkout procedure verifies the generator operation. If a malfunction is found, refer to the Warranty in the front of this manual. A dual trace, 150 MHz bandwidth oscilloscope with X 10 time base magnification, a 50Ω load, a coaxial tee and three 50Ω cables are required to perform this checkout.

Set up as in figure 2-2 and preset the generator front panel controls as follows.

Control	Position
Frequency Dial	2.0
FREQ MULT (bottom row of switches)	10K
VERNIER	cw
SYMMETRY	OFF
DC OFFSET	OFF
FUNCTION (bottom row of switches)	⊓
TRIG START/STOP	0° CAL
ATTENUATION	20|0
AMPLITUDE	cw
FREQ/PERIOD MULT	10|1K
FREQ/PERIOD VARIABLE	cw
FUNCTION (modulation generator)	∿

www.valuetronics.com

MOD AMPLITUDE . . . . . ccw
MODULATION Switches . . . . . OFF
Mode Switch . . . . . CONT
TRIGGER LEVEL . . . . . 10 o'clock
POWER . . . . . ON

Perform the steps in table 2-1. Only approximate values are required to verify operation.

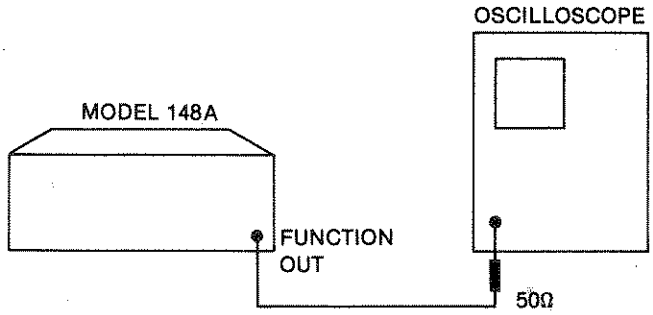

Figure 2-2. Initial Setup

2.4 PREPARATION FOR RESHIPMENT

To return the instrument to Wavetek or an authorized service center, suitable packing material should be used.

If the original packing materials were saved, pack the instrument in the same manner as it was received.

When using packing materials, other than the original packing, use the following guidelines when packing the instrument.

1. Wrap the instrument in plastic packing material.
2. Use a double-wall shipping container that is made from 350-lb test material.
3. Protect all sides with shock-absorbing material to prevent instrument movement within the container.
4. Seal the shipping container.
5. Mark FRAGILE on the shipping container.

When returning an instrument always attach a tag that states the reason the instrument is being returned (i.e., repair or calibration) and a detailed description of the specific problem.

2.5 PREPARATION FOR STORAGE

The instrument should be stored in a clean, dry environment. The following limitations apply to both storage and reshipment.

Temperature: −55°C to 75°C.

Relative Humidity: Not to exceed 95% at 25°C and sea level (non-condensing).

Altitude: Sea level to 40,000 ft.

Table 2-1. Initial Checkout

Step	Control	Position/Operation	Observation
1	FUNCTION	Rotate to all positions. Return to ∿ .	∿ , ∿ , ⊓ are 15V p-p; ⎍ , ⊔ are 7.5 Vp. DC is 0V.
2	ATTENUATION	Rotate ccw. Return to 20I0.	Waveform amplitude is successively 15, 1.5, 0.15 and 0.015V p-p.
3	AMPLITUDE	Rotate ccw. Return to 12 o'clock.	Ccw decreases amplitude.
4	DC OFFSET	Rotate cw. Return to OFF.	Ccw of 0 gives negative offset; cw of 0 gives positive offset. Clipping occurs when offset + waveform peak amplitude exceeds ±7.5V. OVERLOAD LED lights when clipping occurs.
5	SYMMETRY	Rotate cw. Return to OFF.	Frequency decreases to 2 kHz. Ccw of control midpoint gives 1:19; cw gives 19:1.
6	FREQ MULT	Rotate to all positions. Return to 10K.	Frequency is 2 × each setting.
7	FREQ VERNIER	Rotate ccw. Return cw.	Frequency decreases slightly when turned ccw (∿ 1% of range).
Set up the generator as in figure 2-3. Trigger on channel 2 and observe channel 2 (MODULATION GENERATOR OUT).			
8	MODULATION GENERATOR FUNCTION	Rotate to all positions. Return to ∿	∿ , ∿ , ⊓ are 10V p-p; ⟋⟋ , ⟍⟍ give 2 kHz, 5 Vp ramp; SWP SET gives 5 Vdc.

www.valuetronics.com

Table 2-1. Initial Checkout (Continued)

Step	Control	Position/Operation	Observation
9	FREQ/PERIOD MULT	Rotate to all positions. Return to 10I1K.	Frequency is approximately the value to the right of the detent mark.
10	FREQ/PERIOD VARIABLE	Rotate ccw. Return to 12 o'clock.	Frequency decreases to approximately 10 Hz when full ccw.
Observe both channels.			
11	Mode	INT GATE.	
12	TRIGGER LEVEL	Rotate throughout its range.	The number of waveform cycles in each gated "burst" varies with the trigger level.
13	Mode	EXT GATE.	Gated waveforms the same as with INT GATE.
14	Mode	INT TRIG.	
15	TRIGGER LEVEL	Rotate throughout its range.	The relative position of the waveform on each channel shifts (indicates the change in trigger level).
16	TRIG START/STOP	Rotate throughout its range.	The waveform start/stop point varies from −90° to +90°.
17	Mode	EXT TRIG.	Triggered waveform.
Set up the generator as in figure 2-4.			
18	Mode	CONT.	
19	AM	INT.	Ch1 waveform amplitude varies with instantaneous amplitude of Ch2 waveform.
20	MOD AMPLITUDE	Rotate throughout its range.	Amount of modulation increases through 100% when cw. If waveform clipping occurs, OVERLOAD LED will light.
21	AM	EXT; return to OFF.	Ch1 waveform is suppressed carrier type. Amplitude varies with instantaneous amplitude of Ch2 waveform.
22	FM/SWP	INT.	Ch1 frequency varies with instantaneous amplitude of Ch2 waveform.
23	MOD AMPLITUDE	Rotate throughout its range.	Amount of modulation increases when cw.
24	FM/SWP	EXT; return to OFF.	Ch1 frequency varies with instantaneous amplitude of Ch2 waveform.
25	FREQ MULT	100.	

www.valuetronics.com

Table 2-1. Initial Checkout (Continued)

Step	Control	Position/Operation	Observation
26	Dial	1.2; set scope for 2 or 3 cycles; sync scope on line and fine tune generator frequency for stable pattern.	
27	PM	INT.	
28	AMPLITUDE	cw.	
29	MOD AMPLITUDE	Rotate throughout its range.	Phase or position of Ch1 waveform varies with instantaneous amplitude of Ch2 waveform.

The following procedure verifies that the 148A with option 001 will synchronize to a master signal source. Set up as in figure 2-5, leave master signal source disconnected, and preset the generator front panel controls as follows:

Control	Position
Freq Dial	0.1
FREQ MULT	10M
FUNCTION	
Mode Selector	CONT
SYMMETRY	OFF
DC OFFSET	OFF
MODULATION:	
AM	OFF
FM/SWP	OFF
PM (0)	OFF
ATTENUATION	0dB
AMPLITUDE	As desired

30	VERNIER	Rotate as needed	Set frequency for 1 ±.001 MHz

Set master signal source to 1.0100 MHz, 1 Vp-p sine wave.

31		*Connect master signal source to EXT SYNC IN*	*Counter reading 1.0100 MHz (or stable Lissajous figure).*

If master signal source is a synthesizer, a counter may be used to verify synchronization. Otherwise, use a 1:1 Lissajous figure.

Set master signal source to 990.0 kHz.

32			Counter reading 0.9900 MHz (or stable Lissajous figure).

www.valuetronics.com

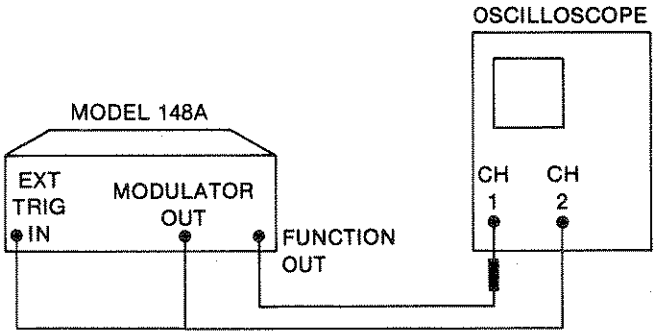

Figure 2-3. Second Setup

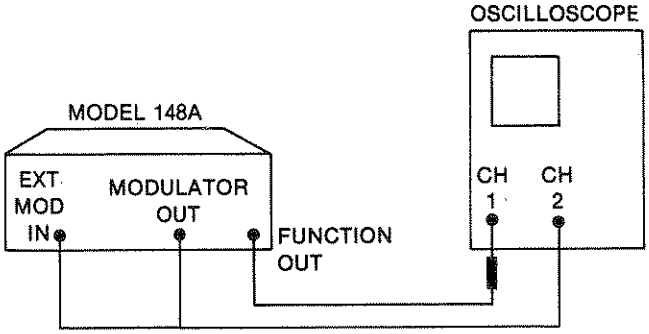

Figure 2-4. Third Setup

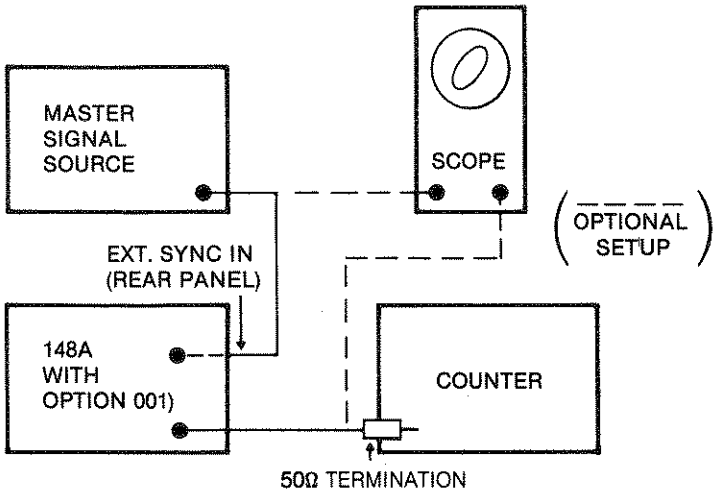

Figure 2-5. Fourth Setup

www.valuetronics.com

www.valuetronics.com

SECTION 3
OPERATION

3.1 CONTROLS AND CONNECTORS

The following item numbers are keyed to figure 3-1.

3.1.1 Main Generator

1 **Frequency Dial** — The frequency control of the main generator. The setting on this dial multiplied by the FREQ MULT **12** setting is the basic output frequency of the generator at the FUNCTION OUT **6** and SYNC OUT **7** BNCs. The FREQ VERNIER **12** and, in some cases, the modulation generator also affect the main generator frequency.

2 **Mode Switch** — This outer switch selects the operating mode of the main generator as follows:

a. **EXT GATE Mode** — The main generator is quiescent until a proper gate signal is applied at the EXT TRIG IN BNC **13** and then outputs the selected signal for the duration of the gate signal, plus the time to complete the last cycle generated.

b. **EXT TRIG Mode** — Same as for EXT GATE mode, except the main generator output is one cycle of selected signal only.

c. **CONT Mode** — The output signal is continuous.

d. **INT TRIG** — Same as for EXT TRIG mode, except the trigger signal is applied internally by the modulation generator.

e. **INT GATE** — Same as for EXT GATE, except the gate signal is applied internally by the modulation generator.

TRIGGER LEVEL Control — This inner control is a continuously variable adjustment of the trigger circuitry firing point. When full ccw, a positive going pulse at approximately −7.5V is required for triggering (see figure 3-2). In the full cw position, a positive going pulse at approximately +7.5V or more positive voltage is required for triggering. In the GATE modes, the generator will run continuously when the control is cw of 12 o'clock.

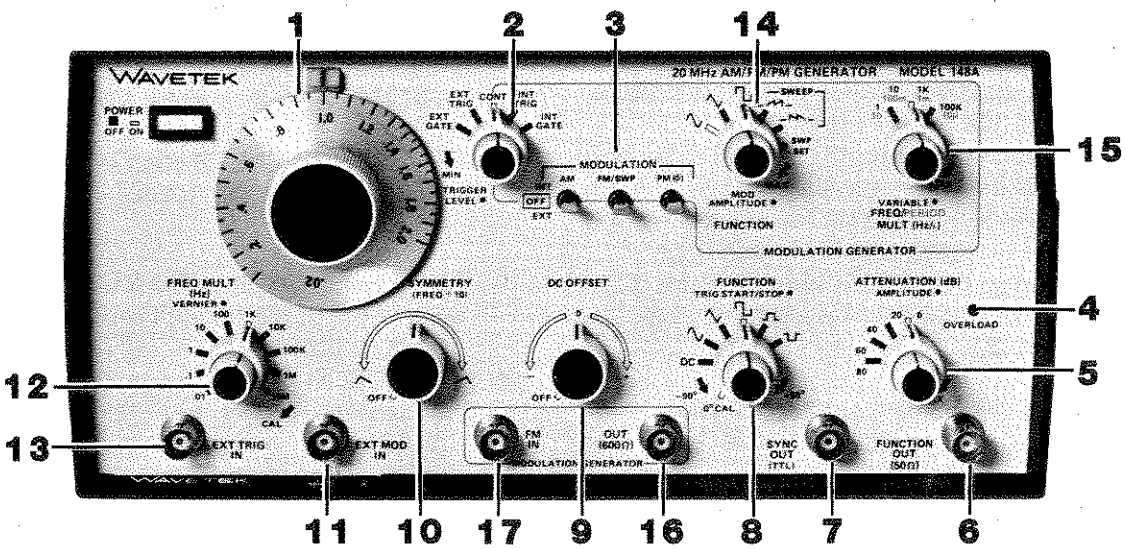

Figure 3-1. Controls and Connectors

www.valuetronics.com

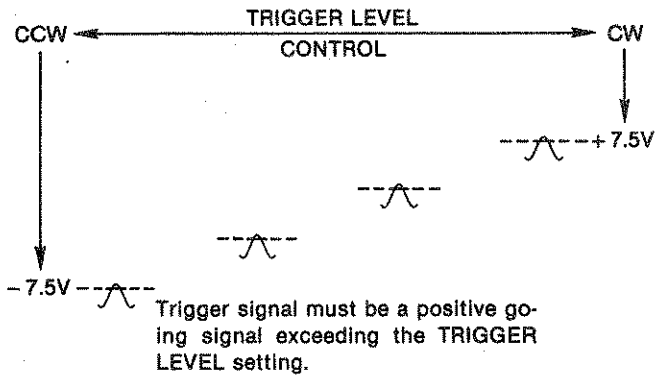

Figure 3-2. Minimum Trigger Signal

3 **MODULATION Switches** — These three switches (AM, FM/SWP and PM) set the type of modulation of the main generator (amplitude, frequency or phase) and select the source of modulation signals as either internal from the modulation generator or external at the EXT MOD IN BNC **11**. Each switch has an OFF position for no modulation. When the AM switch is set to INT, the main generator amplitude and attenuation are automatically 50% of normal to prevent overmodulation. When the AM switch is set to EXT, the main generator amplitude is automatically fixed at zero to allow suppressed carrier operation.

4 **OVERLOAD Indicator** — LED lights if ±7.5 peak voltage into 50Ω (output amplifier limits) is exceeded.

5 **ATTENUATION Switch** — This switch selects the attenuation range of the FUNCTION OUT **6** signal. The inner AMPLITUDE control is a vernier that sets the waveform amplitudes between the two values indicated by the ATTENUATION switch. The dc offset is attenuated to the value clockwise of the position selected. ∿ , ∿ and ⊓⊔ are variable to 30V p-p (15V p-p into 50Ω). ⎍ and ⊔ are variable to 15 Vp (7.5 Vp into 50Ω). Waveforms and dc can supply 150 mA peak current. When the AM MODULATION switch is set to INT or EXT, the ATTENUATION and AMPLITUDE controls are affected. (Refer to item number **3**.)

6 **FUNCTION OUT (50Ω) Connector** — This BNC is the waveform (or dc) output of the main generator.

7 **SYNC OUT (TTL) Connector** — This BNC is the output of a TTL pulse at the main generator frequency, synchronous with the FUNCTION OUT **6** signal in frequency and waveform symmetry. The TTL pulse will drive 10 TTL loads.

8 **FUNCTION Switch** — This switch selects the primary waveform (or dc) output of the main generator at the FUNCTION OUT BNC: sine (∿), triangle (∧), square (⊓⊔), positive half square(⎍) and negative half square(⊔).

TRIG START/STOP Control — This inner control sets the main generator waveform start and stop point. It applies only to the ∿ and ∿ waveforms, to the trigger and gate modes and to waveforms less than 2 MHz. Range is 0 ±90°. A 0° CAL detent ensures standard waveforms that start and stop at 0°.

9 **DC OFFSET Control** — This control offsets the main generator output waveform vertically from its normal position and, when FUNCTION switch **8** is in DC position, controls polarity and voltage of dc output. Offset range is 0 ±14.4Vdc (±7.2 Vdc into 50Ω). An OFF detent ensures zero offset. DC offset and waveform are attenuated by the ATTENUATION control **5**, but not by the AMPLITUDE control **5**. Waveform peak voltage plus dc offset is limited to ±15V (±7.5V into 50Ω).

10 **SYMMETRY Control** — This control varies the symmetry of the waveforms (normally 50% duty cycle). Symmetry range, half cycle to half cycle, is 19:1 to 1:19. An OFF detent ensures 1:1 (50%) symmetry. When SYMMETRY control is used, main generator frequency is divided by 10.

11 **EXT MOD IN Connector** — This BNC receives the external modulation signal. This signal is applied to the modulating circuits when a MODULATION switch **3** is in the EXT position.

12 **FREQUENCY MULT Switch** — This outer switch selects one of ten frequency multipliers for the dial **1** setting.

VERNIER Control — This inner control is a fine adjustment of the frequency dial **1** setting.

13 **EXT TRIG IN Connector** — This BNC receives the external trigger and gate signals. These signals are applied to the trigger and gate circuits when the mode switch **2** is in EXT TRIG or EXT GATE positions. Refer to paragraph 1.2 for trigger signal requirements. The TRIGGER LEVEL control **2** selectively accepts trigger and gate signals for the trigger and gate circuits.

www.valuetronics.com

SECTION 3
OPERATION

3.1 CONTROLS AND CONNECTORS

The following item numbers are keyed to figure 3-1.

3.1.1 Main Generator

1 **Frequency Dial** — The frequency control of the main generator. The setting on this dial multiplied by the FREQ MULT **12** setting is the basic output frequency of the generator at the FUNCTION OUT **6** and SYNC OUT **7** BNCs. The FREQ VERNIER **12** and, in some cases, the modulation generator also affect the main generator frequency.

2 **Mode Switch** — This outer switch selects the operating mode of the main generator as follows:

a. EXT GATE Mode — The main generator is quiescent until a proper gate signal is applied at the EXT TRIG IN BNC **13** and then outputs the selected signal for the duration of the gate signal, plus the time to complete the last cycle generated.

b. EXT TRIG Mode — Same as for EXT GATE mode, except the main generator output is one cycle of selected signal only.

c. CONT Mode — The output signal is continuous.

d. INT TRIG — Same as for EXT TRIG mode, except the trigger signal is applied internally by the modulation generator.

e. INT GATE — Same as for EXT GATE, except the gate signal is applied internally by the modulation generator.

TRIGGER LEVEL Control — This inner control is a continuously variable adjustment of the trigger circuitry firing point. When full ccw, a positive going pulse at approximately −7.5V is required for triggering (see figure 3-2). In the full cw position, a positive going pulse at approximately +7.5V or more positive voltage is required for triggering. In the GATE modes, the generator will run continuously when the control is cw of 12 o'clock.

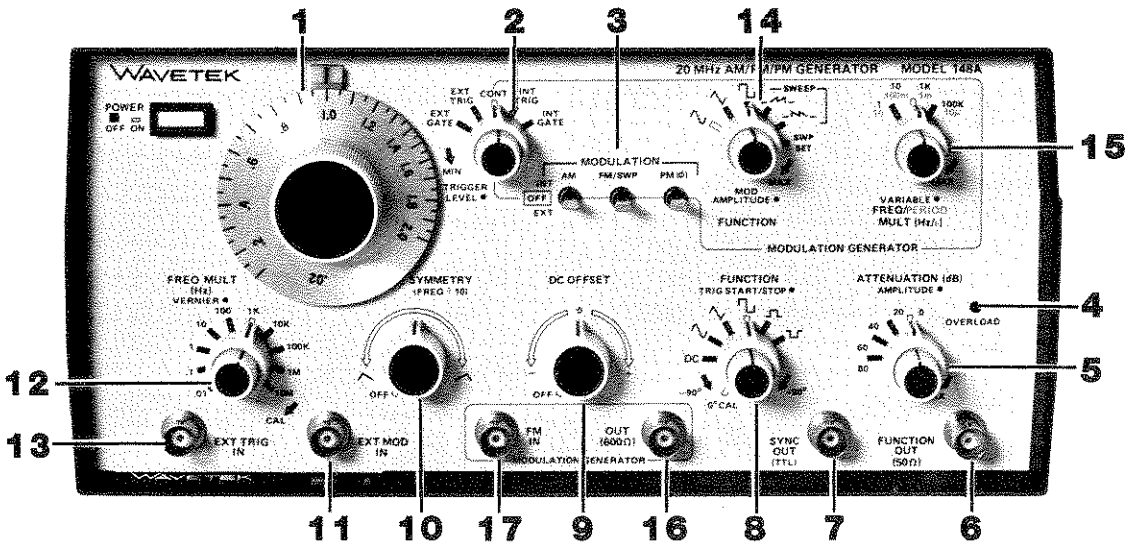

Figure 3-1. Controls and Connectors

www.valuetronics.com

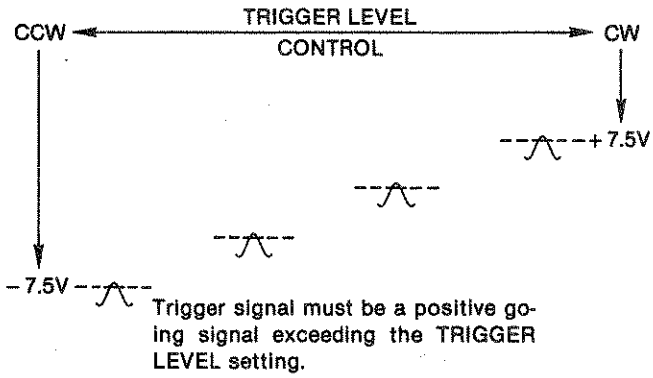

Figure 3-2. Minimum Trigger Signal

3 **MODULATION Switches** — These three switches (AM, FM/SWP and PM) set the type of modulation of the main generator (amplitude, frequency or phase) and select the source of modulation signals as either internal from the modulation generator or external at the EXT MOD IN BNC **11**. Each switch has an OFF position for no modulation. When the AM switch is set to INT, the main generator amplitude and attenuation are automatically 50% of normal to prevent overmodulation. When the AM switch is set to EXT, the main generator amplitude is automatically fixed at zero to allow suppressed carrier operation.

4 **OVERLOAD Indicator** — LED lights if ±7.5 peak voltage into 50Ω (output amplifier limits) is exceeded.

5 **ATTENUATION Switch** — This switch selects the attenuation range of the FUNCTION OUT **6** signal. The inner AMPLITUDE control is a vernier that sets the waveform amplitudes between the two values indicated by the ATTENUATION switch. The dc offset is attenuated to the value clockwise of the position selected. ∿ , ∿ and ⊓ are variable to 30V p-p (15V p-p into 50Ω). ⎍ and ⎍ are variable to 15 Vp (7.5 Vp into 50Ω). Waveforms and dc can supply 150 mA peak current. When the AM MODULATION switch is set to INT or EXT, the ATTENUATION and AMPLITUDE controls are affected. (Refer to item number **3**.)

6 **FUNCTION OUT (50Ω) Connector** — This BNC is the waveform (or dc) output of the main generator.

7 **SYNC OUT (TTL) Connector** — This BNC is the output of a TTL pulse at the main generator frequency, synchronous with the FUNCTION OUT **6** signal in frequency and waveform symmetry. The TTL pulse will drive 10 TTL loads.

8 **FUNCTION Switch** — This switch selects the primary waveform (or dc) output of the main generator at the FUNCTION OUT BNC: sine (∿), triangle (∿), square (⊓), positive half square(⎍)and negative half square(⎍).

TRIG START/STOP Control — This inner control sets the main generator waveform start and stop point. It applies only to the ∿ and ∿ waveforms, to the trigger and gate modes and to waveforms less than 2 MHz. Range is 0 ±90°. A 0° CAL detent ensures standard waveforms that start and stop at 0°.

9 **DC OFFSET Control** — This control offsets the main generator output waveform vertically from its normal position and, when FUNCTION switch **8** is in DC position, controls polarity and voltage of dc output. Offset range is 0 ±14.4Vdc (±7.2 Vdc into 50Ω). An OFF detent ensures zero offset. DC offset and waveform are attenuated by the ATTENUATION control **5**, but not by the AMPLITUDE control **5**. Waveform peak voltage plus dc offset is limited to ±15V (±7.5V into 50Ω).

10 **SYMMETRY Control** — This control varies the symmetry of the waveforms (normally 50% duty cycle). Symmetry range, half cycle to half cycle, is 19:1 to 1:19. An OFF detent ensures 1:1 (50%) symmetry. When SYMMETRY control is used, main generator frequency is divided by 10.

11 **EXT MOD IN Connector** — This BNC receives the external modulation signal. This signal is applied to the modulating circuits when a MODULATION switch **3** is in the EXT position.

12 **FREQUENCY MULT Switch** — This outer switch selects one of ten frequency multipliers for the dial **1** setting.

VERNIER Control — This inner control is a fine adjustment of the frequency dial **1** setting.

13 **EXT TRIG IN Connector** — This BNC receives the external trigger and gate signals. These signals are applied to the trigger and gate circuits when the mode switch **2** is in EXT TRIG or EXT GATE positions. Refer to paragraph 1.2 for trigger signal requirements. The TRIGGER LEVEL control **2** selectively accepts trigger and gate signals for the trigger and gate circuits.

www.valuetronics.com

3.1.2 Modulation Generator

14 **FUNCTION Switch** — This switch selects the waveform output of the modulation generator. Output is at the OUT BNC connector **16** and is also available internally to the main generator. Waveforms are sine (∿), triangle (∧), square (⊓), ramp up (⟋) and ramp down (⟍). A SWP SET detent holds the OUT BNC at AMPLITUDE control **14** level; used to set upper sweep frequency.

MOD AMPLITUDE Control — This inner control attenuates the modulation generator signal that is internally fed to the main generator when modulating. It has no effect during internal triggering or gating and it has no effect on the OUT **16** signal.

15 **FREQ/PERIOD MULT Switch** — This outer switch (with ranges given in both frequency and period) selects the modulation generator frequency/period range.

VARIABLE Control — This inner control sets the frequency/period within a range.

16 **OUT (600Ω) Connector** — This BNC is the modulation generator waveform output: sine (∿), triangle (∧) and square (⊓) fixed level 10V p-p (5V p-p into 600Ω) waveforms balanced about ground and ramp (⟋, ⟍) fixed level 0 to +5 Vp waveform.

17 **FM IN (5 kΩ) Connector** — This BNC is the input for frequency modulation of the modulation generator. Sensitivity is 20% of frequency range per volt in.

3.1.3 Rear Panel

EXT SYNC IN (Option 001) — This BNC (not illustrated) requires a minimum signal level of 1 Vp-p and a maximum signal level of 20 Vp-p. Its input impedance is approximately 2 kΩ with 10 pF. The frequency of the external sync signal must be within 1% of the 148A's frequency setting.

3.2 OPERATION

For convenience, the generator operation has been grouped in seven basic modes, from which many variations and combinations are possible. The following paragraphs give basic switch positions for each mode and requirements and suggestions for operation.

The basic modes of operation are:

a. **Continuous** — A continuous output signal.

b. **Triggered** — One cycle of waveform for each trigger signal.

c. **Gated** — A "burst" of waveforms for the duration of each gate signal.

d. **AM** — The instantaneous amplitude of the output signal varies with the instantaneous amplitude of the modulation signal.

e. **FM** — The instantaneous frequency of the output signal varies with the instantaneous amplitude of the modulation signal.

f. **PM** — The instantaneous phase of the output signal varies with the instantaneous amplitude of the modulation signal.

g. **DC** — The dc output can be set from +15 Vdc to −15 Vdc (+7.5 Vdc to −7.5 Vdc into 50Ω).

3.2.1 Continuous Operation

When setting up the generator, it is advisable to observe the output on an oscilloscope. Connect FUNCTION OUT to the scope input using a 50Ω cable and a 50Ω load. For continuous waveform output, select a basic waveform at the desired frequency. Ensure the modulation switches are set to OFF and the mode is set to CONT. The output amplitude can be as great as 15V p-p; attenuate as desired.

NOTE

For best waveform quality, use the ATTENUATION SWITCH for gross attenuation; then use the AMPLITUDE control for fine attenuation.

The waveform may be skewed to the left or right using the SYMMETRY control; e.g., making a ramp (⟋) from a triangle (∧) waveform.

NOTE

The output frequency is divided by 10 when the SYMMETRY control is switched from the OFF position.

The dc level of the waveform may be varied with the DC OFFSET control, but waveform clipping can occur.

NOTE

Waveform clipping will occur (OVERLOAD LED will light), unless waveform amplitude is decreased so that waveform plus offset is less than 7.5 volts at the waveform peak.

3.2.2 Triggered Operation

In triggered operation, there is one cycle of output for each trigger signal input. For triggered operation, first

www.valuetronics.com

set up the generator for continuous operation (refer to paragraph 3.2.1). The main generator may be triggered internally by the modulation generator or triggered by an external source. If an unmodulated waveform is being output, the modulation generator is free to give the desired triggering frequency and should be selected as the trigger source. Use any modulation generator waveform as the trigger. Set the modulation generator frequency for the desired trigger frequency and sync on the modulation generator output.

NOTE

1. *Trigger frequency must be slower than the output waveform frequency.*
2. *The MOD AMPLITUDE control has no effect in INT TRIG and INT GATE modes.*

Rotate the TRIGGER LEVEL control to obtain a good trigger. If the waveform start/stop point is to be other than zero degrees, set the TRIG START/STOP control as required. (See figure 3-3.) Haverwaves can be set up using start/stop control and dc offset control.

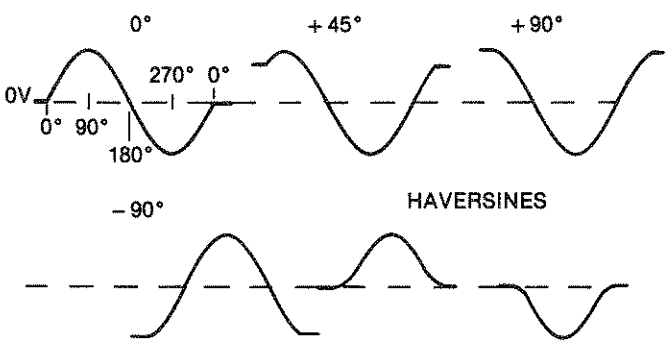

Figure 3-3. Waveform Start/Stop Examples

If external triggering is to be used, connect a repetitive signal with a positive going transition of greater than one volt to EXT TRIG IN using a 50Ω cable. Adjust the TRIGGER LEVEL control for proper triggering.

3.2.3 Gated Operation

In gated operation there is a "burst" of waveforms lasting the duration of the gate pulse plus the time required to complete the last cycle of waveform started. Set up as for triggered operation (refer to paragraph 3.2.2) and select a "trigger" signal whose duty time gives the desired waveform burst.

3.2.4 Manual Triggering and Gating

The TRIGGER LEVEL control can also be used for manually triggering or gating the generator. For manually triggering (single cycles), the generator mode should be EXT TRIG with no external signal input at the EXT TRIG IN connector. Each time TRIGGER LEVEL is rotated cw through mid-position, one triggered cycle will be generated. In EXT GATE mode, the generator runs continuously as long as the TRIGGER LEVEL is cw of mid-position.

3.2.5 AM Operation

In amplitude modulation, the instantaneous amplitude of the output signal varies with the instantaneous amplitude of the modulation signal.

NOTE

The output waveform will be clipped (OVERLOAD LED will light) if any instantaneous amplitude greater than ±15 volts (±7.5 volts into 50Ω) is produced.

Set up the generator as for continuous operation (refer to paragraph 3.2.1). Switch to internal or external amplitude modulation. If internal, note that the carrier (main generator waveform) mean amplitude is decreased to half. This is to prevent clipping (overdriving the output amplifier) when the carrier amplitude is modulated (increased and decreased) by another signal. Set the modulation generator frequency to a lower frequency than the main generator and sync the scope to the modulation generator output. Set the modulator amplitude for a desired percentage of amplitude modulation (0 to greater than 100% range) and set the main generator ATTENUATION and AMPLITUDE controls for a desired amplitude of modulated waveform. If external modulation is selected, observe that the carrier (main generator waveform) amplitude drops to zero (null). This is for suppressed carrier mode of amplitude modulation. Connect the modulator OUT (600Ω) to the EXT MOD IN with a coaxial cable. Set the main generator ATTENUATION and AMPLITUDE controls for a desired amplitude of suppressed carrier waveform. For best results when using an external modulation signal at EXT MOD IN, maintain as near as convenient a 5 Vp amplitude (which does not exceed 5 Vp); then use the main generator ATTENUATION and AMPLITUDE controls. An external source may also be used for regular AM operation, rather than suppressed carrier operation, by supplying a dc component along with the ac

www.valuetronics.com

modulating signal (observing 5 Vp limit) to set the carrier level.

3.2.6 FM Operation

In FM operation, the instantaneous frequency of the output signal varies with the instantaneous amplitude of the modulating signal.

NOTE

The output frequency modulation will not be linear when the instantaneous modulated frequency exceeds these range limits.

Upper Limit: 2.0 × FREQ MULT
Lower Limit: 0.001 × Upper Limit

Set up the generator as for continuous operation (refer to paragraph 3.2.1). The frequency setting will be the center frequency from which the modulated signal will vary. Switch to internal or external FM modulation. If internal, set the modulation generator frequency as desired and sync on the modulation generator signal. Set the modulation amplitude for the amount of modulation desired. Because the main generator is limited in frequency range (limited to approximately the dial range for any given multiplier setting), the main generator frequency dial and the modulation amplitude control must be balanced to stay within that range. The range is shown in figure 3-4 as the OUTPUT FREQUENCY FACTOR, which, when multiplied by the FREQ MULT setting, gives the actual output frequency. Example 1 shows the output being swept over the full frequency range when the main generator frequency dial is set at midpoint (1.0), the MOD AMPLITUDE control set at midrange and the modulation signal is a balanced waveform (∿ , ∿ or ⊓⊔); that is, the modulation generator voltage swings both positive and negative. If the MOD AMPLITUDE control is rotated toward ccw, the voltage swing decreases and the angle subtended in the nomograph decreases. If the MOD AMPLITUDE control is rotated toward MAX, the angle subtended would overshoot the OUTPUT FREQUENCY FACTOR range, indicating that saturation is likely.

3.2.7 Sweep Operation

For sweep operation, set up the generator for continuous operation (refer to paragraph 3.2.1). The frequency setting will be the lower frequency of the continuously varying (or swept) frequency. Switch FM/SWP to internal or external modulation as desired. If internal set the modulation generator FUNCTION

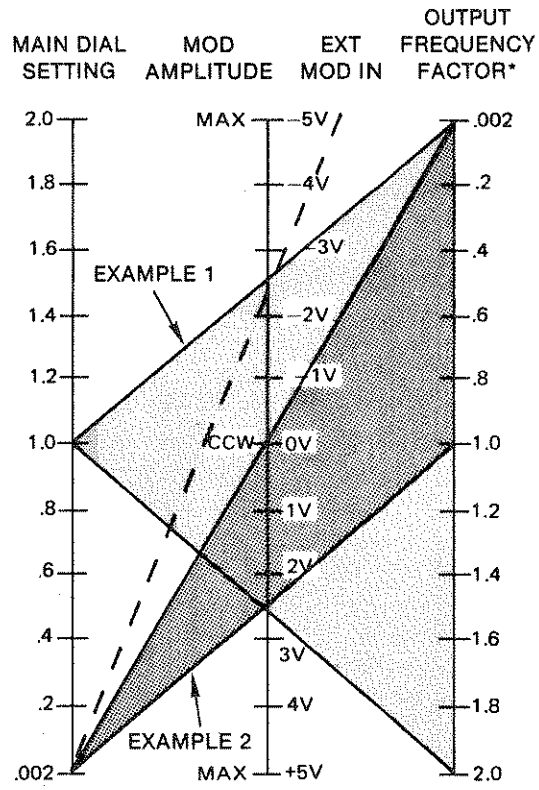

*Multiply by FREQ MULT for actual output.

Figure 3-4. Frequency Modulation Nomograph

switch to SWP SET, monitor the FUNCTION OUT with a counter or oscilloscope and vary the MOD AMPLITUDE control for exactly the upper frequency desired. Note that the main generator is limited in frequency range (limited to approximately the dial range for any given multiplier setting). Select either /\/\ for sweep up or \/\/ for sweep down. Select the sweep rate desired. Keep in mind the /\/\ and \/\/ frequencies are double the indicated frequencies on the FREQ/PERIOD control.

Example 2 shows the output being swept from the bottom of the range to midrange by setting the main dial fully cw and the VERNIER fully ccw for absolute bottom of the range. The MOD AMPLITUDE control was left at midrange and the ramp (/\/\ ) waveform used as the modulator. The ramp is a positive going only waveform. Had a balanced waveform been used, the angle subtended would have included the dotted line and resulted in saturation. If an external modulation signal is to be used, the EXT MOD IN values in the nomograph indicate the signal level required for the desired results.

www.valuetronics.com

3.2.8 PM Operation

In PM operation, the instantaneous phase of the output signal varies with the instantaneous change in amplitude of the modulating signal. The change in phase is made by changing the frequency of the generator until the correct phase angle change is made. The modulation circuit differentiates the modulation signal; that is, its output is proportional to the rate of change of modulation signal amplitude. This voltage is fed to the main generator in exactly the same manner as the FM voltage is. The voltage effects a change in frequency and, in the case of a step function modulation, for example, exists only long enough to cause the desired phase shift. Typically, less than one cycle is required to change the phase. When the phase angle is increased, the frequency increases to achieve it. When the phase angle is decreased, the frequency decreases to achieve it. The frequency required to change the phase also depends upon the modulation frequency and waveform.

NOTE

The output phase will not be linearly modulated when the instantaneous transition frequencies required to effect the phase change exceed these range limits.

Upper Limit: 2.0 × FREQ MULT
Lower Limit: 0.001 × Upper Limit

Nominally, the phase of the main generator is shifted ten degrees for each volt of instantaneous modulation signal. When the main generator is set above a range midpoint, the modulation signal begins to lose its effectiveness. The effect is that the input signal is rolling off at 6 dB/octave due to form factor limitations of the input differentiator. This effect also occurs for modulation signal frequencies above 150 kHz.

Set up the generator as for continuous operation (refer to paragraph 3.2.1). Select a range so that the frequency dial can be set at midpoint or below (for linear operation) and switch to internal or external phase modulation.

NOTE

There is no PM operation for frequency multipliers of 100 or less.

If internal, set the modulation frequency as desired. (If other than sine waveform is selected, greater than 150 kHz modulation frequencies are possible and the effective roll off must be considered.) Set the modulation amplitude as desired. Full range is 5 Vp and phase shift is 10° per 1 Vp.

NOTE

Because the initial phase reference no longer exists when the phase shifts, phase shift measurement will not be possible with an oscilloscope alone. To measure the phase shift, an additional circuit such as a phase modulator will be necessary to establish a phase angle baseline.

www.valuetronics.com

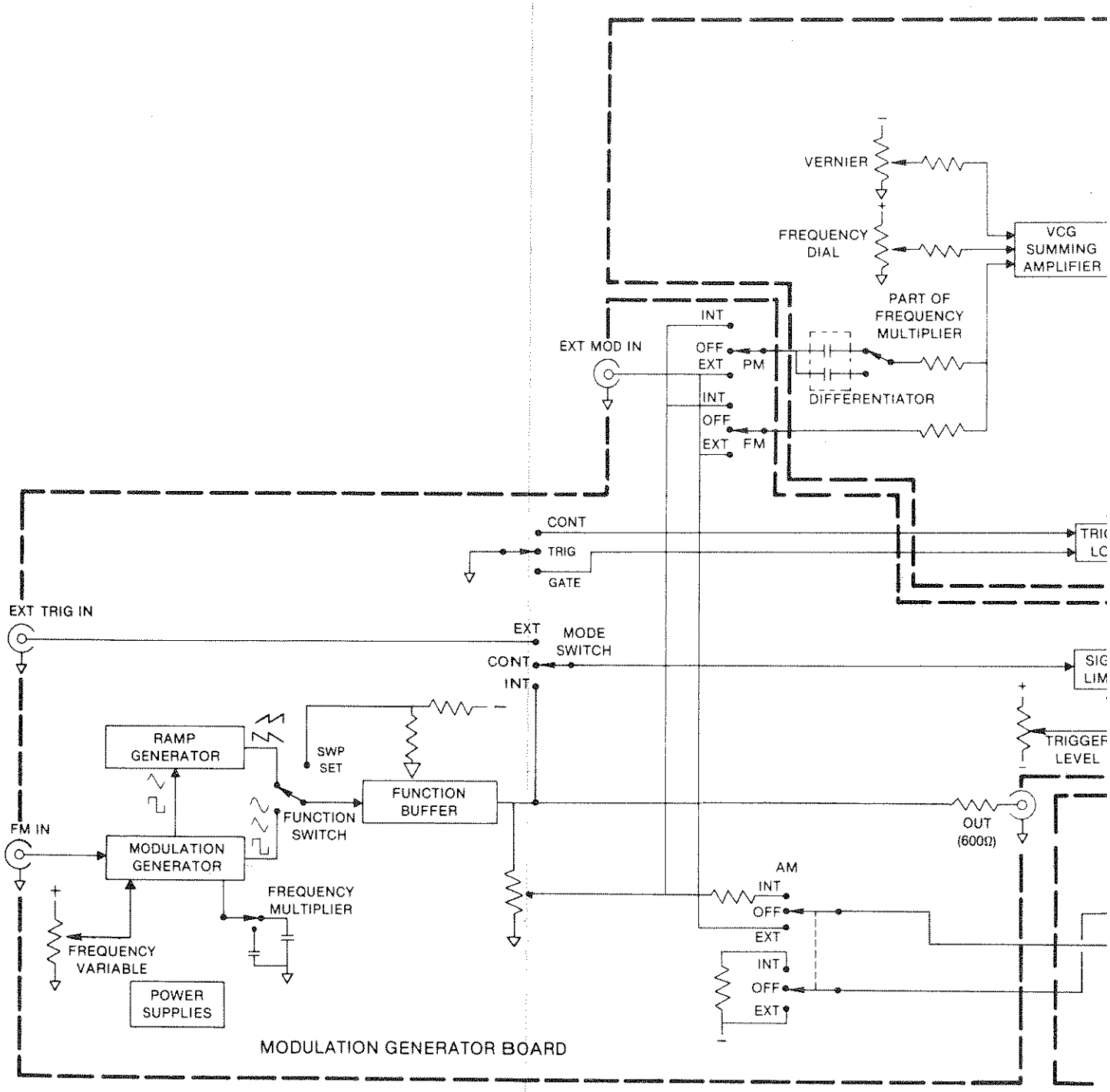

Figure 4-1. Functional Block Diagram

www.valuetronics.com

SECTION 4
CIRCUIT DESCRIPTION

4.1 FUNCTIONAL BLOCK DIAGRAM ANALYSIS

This section describes the functions of major circuit elements and their relationship to one another as shown in figure 4-1, functional block diagram, and figure 4-2, basic generator and timing diagram. Paragraph 4.2 provides further descriptions relating circuit blocks to schematics in section 7.

As shown in figure 4-1, the main generator VCG (Voltage Control of Generator frequency) summing amplifier receives inputs from the frequency dial, vernier, FM and PM switches which produce a sum current. The PM input is provided with a passive differentiator which produces a voltage proportional to the rate of change of the instantaneous voltage of the modulating signal.

The VCG summing amplifier is an inverting amplifier whose output voltage is used to control a complementary current source and current sink. For symmetrical output waveforms, the currents are equal and directly proportional to the algebraic sum of the VCG inputs. The diode gate, controlled by the hysteresis switch, switches either the current source or sink to the timing capacitor selected by the frequency multiplier control. When the current source is switched in, the charge on the capacitor will rise linearly producing the positive-going triangle slope. Likewise, the current sink produces the negative-going triangle slope.

The triangle amplifier is a unity gain amplifier whose output is fed to the hysteresis switch and to the triangle buffer. The hysteresis switch is a bistable device operating as a window detector with limit points set to the triangle peaks. When the hysteresis switch output is +2V, the triangle rises to the +1.25V limit, and the hysteresis switch goes to −2V. This switches currents at the diode gate and the negative-going triangle slope is started. When the triangle reaches the −1.25V limit, the hysteresis switch will switch back to positive, repeating the process. As shown in figure 4-2, this repetitive process results in the simultaneous generation of a square wave and a triangle wave at the same frequency.

The output frequency is determined by the magnitude of the capacitor selected by the frequency multiplier selector and by the magnitude of the currents supplied to and removed from it. Since the currents are linearly proportional to the sum of VCG inputs, so will be the output frequency. The capacitance multiplier provides the bottom four frequency ranges.

When the variable symmetry control is rotated, it first reduces the current sink by a factor of 19, making the negative-going triangle slope 19 times longer than normal. This results in an unsymmetrical waveform output and a frequency division by 10. Continued rotation gradually increases the current sink and reduces the current source in such a way that the period for the triangle to complete one cycle remains constant. This action produces continuously variable symmetry of the output waveforms over a 1:19 to 19:1 range while frequency remains constant at one-tenth of dial and multiplier settings.

The inverted square from the hysteresis switch is fed to the sync amplifier, where it is buffered and converted to a TTL level output, and to the square amplifier, where (if square or pulse functions are selected) a buffered square is sent to the signal shaper for conditioning.

The triangle buffer provides the ±1.25 triangle sufficient drive for the signal shaper and presents a small, constant load on the triangle amplifier.

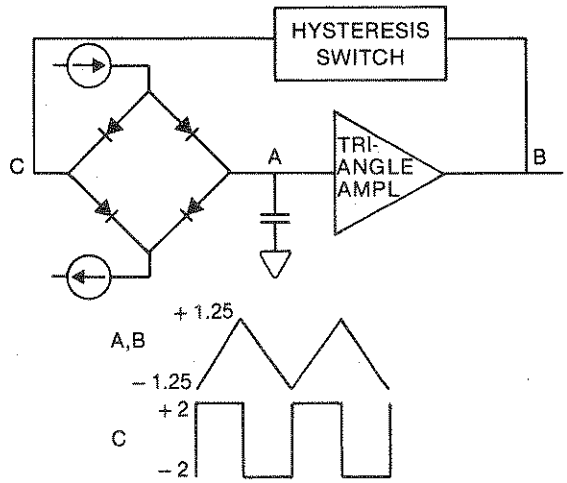

Figure 4-2. Basic Generator Block and Timing Diagram

www.valuetronics.com

The signal shaper contains switching elements and a diode array for signal conditioning the buffered triangle and square inputs into the various waveforms controlled by the function switch. The selected waveform is the carrier (+Y) input to the transconductance multiplier, an integrated circuit, four-quadrant multiplier.

The modulation (+X) input is a positive dc from the control amplifier when the AM switch is off, providing a fixed gain reference for the multiplier. Output currents from the multiplier are applied to the summing node of the preamplifier for conversion to an inverted voltage signal.

The preamplifier output is then attenuated by the front panel amplitude control and fed to the output amplifier summing node along with the dc offset control. The output amplifier is an inverting amplifier whose output is fed into step attenuator and then to the function output connector. The attenuator consists of a distributed network having 50Ω output impedance. This network provides attenuation in 20 dB (1/10) steps to 60 dB.

For continuous operation of the basic function generator loop (bold path in figure 4-1), the trigger amplifier must maintain a positive level above the most positive charge on the integrating capacitor in order to reverse bias the start/stop diode. Thus, in continuous mode the trigger logic senses the continuous control line from the front panel mode selector and holds the inverting trigger amplifier input low.

In triggered and gated modes the trigger amplifier outputs some level below the positive peak charging level, and the start/stop diode is forward biased to sink the current source and prevent the timing capacitor from charging to the positive peak. This stops waveform generation and holds the triangle output at some dc level called the trigger baseline. The trigger baseline is the level where a triangle, and thus sine, waveform starts and stops when triggered or gated.

The normal trigger baseline is zero volts, analogous to 0° phase of a sine or triangle waveform. The trigger start/stop control offsets the trigger amplifier output and can change the baseline for starting and stopping a sine or triangle waveform from its negative peak (−90°) to its positive peak (+90°). At the extreme positive peak level setting though, the diode is again reverse biased and generator operation goes continuous, independent of generator mode.

While the integrating capacitor is being held from charging, the start/stop diode must sink the current source, which has a magnitude variable with VCG inputs. Therefore, a compensation is necessary to the voltage level output by the trigger amplifier in order to maintain a constant baseline level as VCG inputs, current source magnitude and forward voltage drop by the start/stop diode are varied. The baseline compensation circuit measures the forward voltage across a diode placed in the current source and injects an offsetting current into the trigger amplifier to maintain an equal voltage differential between the baseline level and trigger amplifier output.

The trigger logic determines that after a waveform starts, it always stops at a complete cycle and at the same phase angle at which it started. The trigger logic receives a trigger stimulus from the signal limiter and latches the trigger amplifier output positive, allowing the generator loop to run. When the negative peak of the last cycle is reached (just one cycle in trigger mode), the square from the hysteresis switch latches the trigger amplifier back to its previous level. The integrating capacitor will charge back to the trigger baseline where the start/stop diode once again forward biases.

The generator mode switch sets the gated control line to determine whether the trigger logic is to latch the generator on for one cycle of for the duration of the trigger stimulus.

The modulation generator board contains the power supplies, the modulation generator and various switching elements to control the source and type of modulation and triggering signals to the main generator.

The modulation generator is an integrated circuit source of sine, triangle and square waveforms, whose frequency is controllable by front panel multiplier switch, variable control, and external voltage at the FM IN input. The triangle and square are applied to a ramp generator consisting of a balanced modulator and buffer amplifier to produce ramp waveforms. A modulation waveform or a SWP SET dc level is sent to the function buffer via the front panel function selector.

The function buffer output is sent to the modulation output (600Ω) connector, the generator mode switch for an internal trigger and gate stimulus, and the amplitude buffer after being attenuated by the front panel amplitude control. The amplitude buffer output goes to the AM, FM and PM switches "internal" positions. The EXT MOD IN connector provides a connec-

www.valuetronics.com

tion for an external signal to the switches "external" positions.

The FM and PM switches provide VCG inputs. The AM switch controls the control amplifier and thus the transconductance multiplier. When AM is off, the control amplifier produces a positive dc level giving the multiplier a fixed gain. With internal AM, the dc component from the control amplifier is cut in half, halving the output amplitude to prevent output clipping when modulating. The selected modulation waveform rides on the dc. The ac (modulation signal) has a peak value equal in magnitude to the dc level when the modulation amplitude control is maximum, making the sum of modulator and carrier signals equal to the maximum output capability of the output amplifier, and the difference equal to the zero output level, which is 100% modulation. Then, by varying the modulation signal, a variable 0 to 100% AM of the carrier (main generator) signal is produced. With external AM, the dc component is switched to 0 Vdc, resulting in zero amplitude output, and bipolar signal inputs at the EXT MOD IN connector will produce suppressed carrier (4-quadrant) modulation.

4.2 CIRCUIT ANALYSIS

4.2.1 VCG Amplifier

Figure 4-3 is a simplified schematic of the VCG circuitry. The value of a resistor "R" is 5 kΩ and supplies are ±15 Vdc. U1 is connected as a summing amplifier to sum the VCG inputs. A top of range input produces 1 mA through the feedback resistor resulting in −5 Vdc at the output of U1.

The negative input of U4 is held at the output level of U1 by controlling the current through Q2 as a feedback. One half the output of U1 is buffered by U3 and applied to the wiper of the variable symmetry control. The negative input of U2 is held at 0 Vdc by controlling the current through Q1 as a feedback. As long as the variable symmetry control is off, the two R/2 resistors have equal voltage across them and an equal current through them as through U1 feedback and there is no current at the output of U3. Since an equal current exists in the entire resistor string from + to − supply, the result is a positive control voltage relative to the negative supply at U6 + input and a negative control voltage with respect to the positive supply at U5 + input, each of which is proportional to the sum of the inputs to U1.

Similarly, U5 and U6 establish feedback by regulating current through FETs, producing a voltage drop across series resistors to the supplies equal to the control voltages. The FET currents will be switched at the diode gate into a timing capacitor to produce the triangle waveform.

4.2.2 Symmetry Control

Let the source of Q2 be −5 Vdc, the wiper of the symmetry control, −2.5 Vdc, and the source of Q1, 0 Vdc. The output of U3 will have no current, each R/2 resistor will have 1 mA, and generator frequency will be at maximum of the range. Open the symmetry switch and set the potentiometer to its electrical center. The output of U3 is still at an equipotential point, but now the total resistance with 5 Vdc across it has changed from R to 10R. Thus, current will drop to 100 μA and output frequency will drop to one-tenth of range. If the potentiometer is rotated, current will flow in U3 output to maintain the wiper at −2.5 Vdc. When the potentiometer is ccw, the wiper is at the positive direction and the upper R/2 will have 2.5V across it with a current source of 1 mA. But the lower R/2 is in series with 9R, which puts 2.5V across 19 × the normal resistance. Now the current sink will have one-nineteenth the magnitude of the current source. The output waveform for this condition is shown in figure 4-3.

4.2.3 Range Switching

For frequency ranges associated with multiplier positions of 100 and 1K, main board schematic, sheet 1, the value of the current source and current sink setting resistors R326, R38, R48 and R330 is 5 kΩ, which provides integrating current sensitivity of 200 μA per volt of external FM input. With the timing capacitors of 1 and 0.1 μF, plus the bulk of the top range timing capacitor and the stray capacitance of the multiplier switch, the generator produces the calibrated output frequency for these ranges. In the top range (multiplier position of 10M), the current setting resistors are paralleled with resistors of one-ninth the value, causing both current sources to run at ten times the usual current, resulting in 2 mA per volt of external FM input. When this current is used with the nominal ~90 pF timing capacitor (fixed value plus strays), the top range of frequencies result. For the next three ranges down (multiplier positions 1M, 100K, 10K), the nominal timing capacitor is the fixed top range capacitor plus strays (i.e., ~90 pF) plus the switched values (11 pF, 910 pF, 0.01 μF). These result in joint timing capacitors of 101 pF, 1010 pF and 0.0101 μF. In these three ranges the positive and negative current sources are boosted by 1% over the next range down

www.valuetronics.com

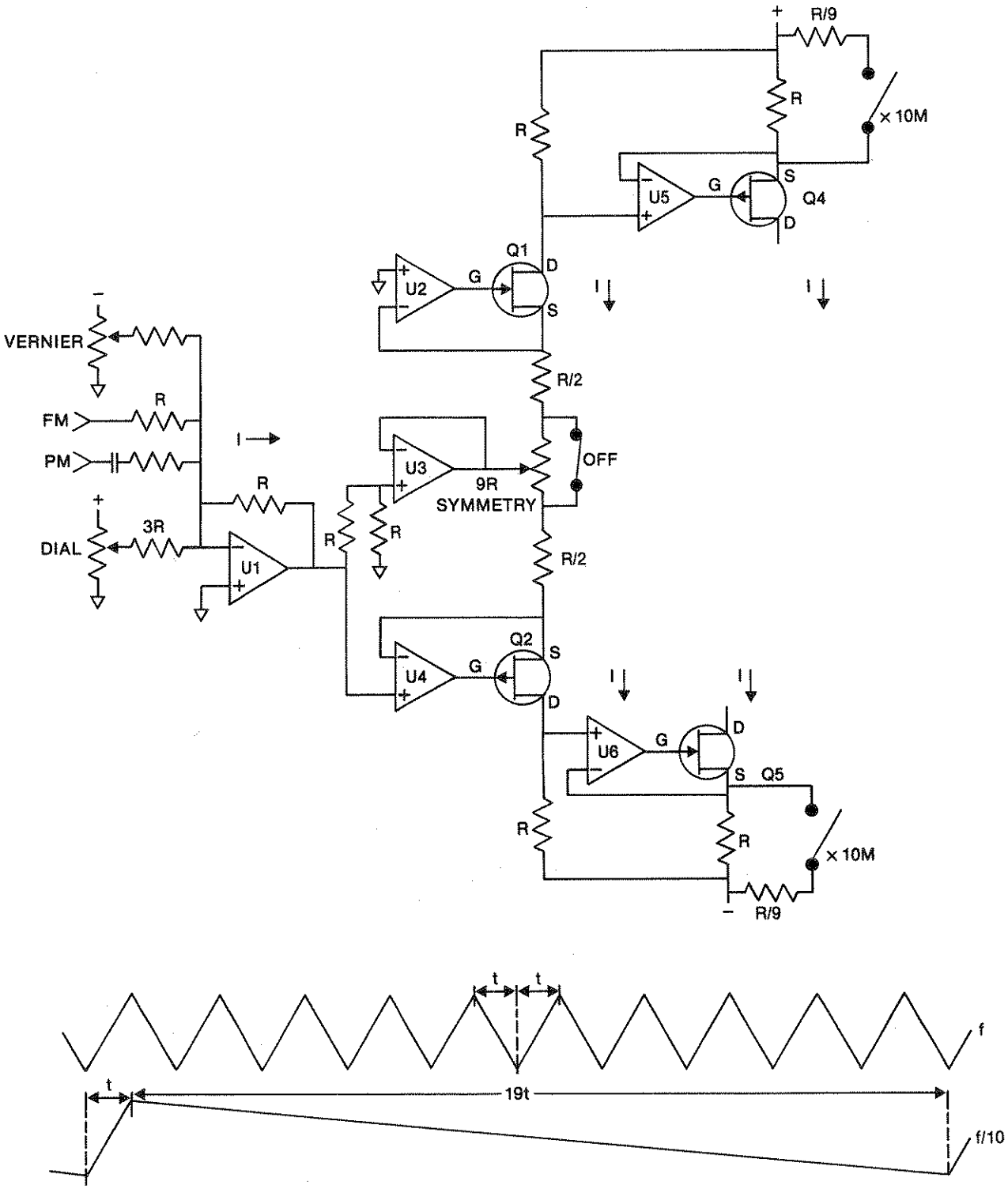

Figure 4-3. VCG Simplified Schematic

www.valuetronics.com

(multiplier 1K) by switching 500 kΩ resistors in parallel with the 5 kΩ basic current setting resistors R326, R38, R48 and R330 producing the output frequencies for these ranges. The four ranges below multiplier setting 100 all have the same integrating current and timing capacitor as the 100 multiplier range, but for each of these ranges, 90%, 99%, 99.9% and 99.99% of the integrating current is subtracted by the capacitance multiplier circuit.

4.2.4 Capacitance Multiplier

For the frequency ranges associated with multiplier positions of 10 through 0.01, a capacitance multiplier circuit (main board schematic, sheet 1), senses the timing capacitor charging current and subtracts the appropriate amount so that the effective charging current is a fraction of that delivered by the current sources. This is accomplished by the connection of the capacitance multiplier to the timing capacitor with one input-output terminal through a section of the frequency multiplier switch. The + terminals of U7 and U8 serve as potentiometric input to these amplifiers. U7 has a fixed resistive feedback network, giving it a fixed gain. Capacitor C26 is forced to comply to the triangle voltage wave being generated, because the R54 side is driven at the potential of the input/output terminal and the other side has the same waveform with some fixed gain from U7. Since the side driven at the input/output signal is a summing node, it is fed the necessary current by the feedback resistors R58, R59, R60 and R61. The feedback resistors are selected by the frequency multiplier control, taking on values which give the correct amplitude to the output of U8. This output with respect to common is the input/output waveform with a square wave superimposed; TP1 is the test point where this output can be picked up for signal tracing. The input/output waveform is a triangle wave so the differential across R62 and R63 is a square wave with the correct amplitude to subtract part of the timing capacitor charging current. Since this square wave amplitude is controlled in decades by the frequency multiplier control via R58, R59, R60 and R61, the instrument frequency is divided in decades even though the current sources and timing capacitor remain the same.

4.2.5 Triangle Amplifier

The main board schematic, sheet 2, shows the triangle amplifier; it uses Q8, an FET source follower, to drive Q10, a bipolar emitter follower, for an open loop gain of one. It is a fast, very high input impedance circuit with output impedance low enough to drive the hysteresis switch and the triangle buffer. In series with Q8 is a matched duplicate FET, Q9. Q9 has the identical drain current as Q8 and, therefore, the same gate-to-source voltage. In series with Q10 is a duplicate emitter follower, Q13. Q13 has the identical collector current as Q10; therefore, it has the same emitter-to-base voltage. Since the gate of the dummy FET, Q9, is connected to the emitter of the dummy emitter follower, Q13, the two terminals have the same voltage. Therefore, within the tolerances of the part parameters and some unaccounted error for base current, the active emitter follower output voltage will be at the value of the input gate. The remaining transistor, Q11, is a second emitter follower for driving the dynamic lead networks at the input of the hysteresis switch. In this role, it needs no dc integrity, as the output is not directly coupled.

4.2.6 Hysteresis Switch

The hysteresis switch (main board schematic, sheet 2) consists mainly of U14, a double input comparator, and Q14/Q15, an output flip-flop. Each differential pair of U14 compares an input voltage to common. The input network provides a positive bias to one and a negative bias to the other; therefore, when the input terminal (output of the triangle amplifier) is at ± 1.25V, the flip-flop changes state. The flip-flop selects which input comparator of the hysteresis switch will be activated in preparation for the next change of state. When the timing capacitor is integrating positively, the positive biased comparator is activated. When the timing capacitor voltage reaches + 1.25V, the flip-flop changes state, the negative comparator is activated and the direction of integration is reversed, so that when the timing capacitor signal reaches − 1.25V, the flip-flop switches back and the cycle starts over. In addition to the positive and negative biases at the comparator inputs, there is a dynamic lead network on each one. These lead networks are driven by Q11, a separate emitter follower, from the triangle amplifier. They provide the necessary lead to compensate for the inherent delays of the hysteresis switch, thereby keeping the higher frequency dial nonlinearity and sine distortion to a minimum.

4.2.7 Diode Gate and Timing Capacitor

The diode gate (current switch) and the timing capacitor circuits are shown in the main board schematic, sheet 2. The current source and sink are switched to the timing capacitor by the hysteresis switch via a diode bridge arrangement called the diode gate. Actually, the hysteresis switch is linked to the bridge network by two emitter followers, Q24 and Q25, with independent outputs biased to be at the

www.valuetronics.com

same voltage. The simplified timing diagram illustrated in figure 4-2 shows these points as one terminal at C. When the hysteresis switch output is positive, CR16 is forward biased, so that the current sink is sourced by the drive circuit and is ineffective. CR13 and CR15 are reverse biased, providing isolation between the drive circuit and the timing capacitor. This leaves CR14 forward biased and free to conduct the current source output to the timing capacitor. When the timing capacitor voltage rises to the hysteresis switch point (+1.25V), the hysteresis switch output switches low, forward biasing CR13 which back biases CR14 and CR16 and allows the source to be isolated and the sink to discharge the timing capacitor through CR15. This state continues until the negative switch point is reached and reverts to the previous state.

4.2.8 Triangle Buffer

The triangle buffer (main board schematic, sheet 2) is a wide band dc amplifier providing a closed loop gain of one in potentiometric connection. The input differential stage, Q17/Q18, is a monolithic pair. The emitters are fed from a current sink Q19. The active collector load, Q20, is a current source providing greater open loop gain than a resistive load. Following this is an emitter follower, Q21, a zener diode level shifter, CR12, and another emitter follower, Q22, for the output stage. The gain is set to one by the 100% feedback to the input pair feedback side, base of Q18.

4.2.9 Signal Shaper

The signal shaper circuit (main board schematic, sheet 3) is uniquely set up for each different waveform by four wafers of the function selector switch. The ±15 volt power is switched off in the triangle wave mode and there is virtually no effect on the triangle wave fed to the circuit. In the positive pulse mode, the square wave, rather than the triangle wave, is fed to the circuit and the −15 volt power is switched off. As a result, the negative swing of the input square wave is clipped off. The negative pulse is formed, when selected by the function switch, in a similar manner. When the square or sine wave is selected, both plus and minus 15 volt power is applied to the circuit. The difference in circuit setup for sine and square is the resistive load at the circuit output and the shape of the signal fed to the input. For the sine wave mode, the matched set of diodes soft clip the input triangle at three different levels. These signals are resistively summed to produce a sine wave voltage input to the multiplier. For the square wave mode, the input square wave is symmetrically hard-clipped by the diode network presenting a square wave input voltage to the multiplier.

4.2.10 Transconductance Multiplier

After the main generator signal passes through the function selector switch and the signal shaper circuit, it enters a transconductance multiplier, U15 (main board schematic, sheet 3), where the amplitude is set by dc from the control amplifier or modulated by ac from the modulation generator via the AM switch. Currents in the open collectors of this IC are worked into a current mirror for optimum gain and fed to the preamplifier summing node for conversion to a voltage signal at TP7.

4.2.11 Preamplifier

The preamplifier (main board schematic, sheet 3), like the output (power) amplifier, is comprised of a high frequency ac amplifier combined with a low frequency dc amplifier. It converts the current from the multiplier to a voltage signal which is attenuated by the front panel amplitude control and amplified by the output amplifier. The U17 circuit is the dc amplifier and the remaining circuitry is the high frequency amplifier. Again, like the output amplifier, the ac amplifier is symmetrically arranged from the R240/R238summing node to R246 and R249 at the output stage of the preamplifier. If the input current goes into the node, the voltage at the summing node will rise by a certain amount. By capacitive coupling via C92 and C93, the base voltage of Q40 rises closer to +15 volts and the base voltage of Q41 rises further away from −15 volts. Thus, the emitter base junction of Q40 will be less forward biased, thereby reducing the emitter current, while the Q41 emitter current increases. The result is an increase in current in Q42 and a decrease in current in Q43, causing a decreased voltage output in R246/R249.The feedback path through R240 to the summing node tends to cancel the rise in voltage there, causing the output voltage to stabilize. The amount of negative voltage at the output required to pull the summing node back to zero is determined by the value of R240.

4.2.12 Output Amplifier

The output amplifier is comprised of a low frequency dc amplifier and a high frequency ac amplifier. Refer to the simplified circuit of figure 4-4. The U19, Q37 and Q38 circuit is the dc amplifier and the remaining circuitry is the ac amplifier. The ac amplifier is symmetrically arranged, top and bottom. The upper por-

www.valuetronics.com

signal at CR24 is held low, and the trigger amplifier output is held high for the trigger duration. The last triangle cycle started is completed through the action explained in trigger mode.

4.2.16 Baseline Compensation

CR2 (main board schematic, sheet 1) is in series with the current supplied by the VCG current source. U9-3 is connected to CR2 anode and, since it is a voltage follower, it will have the same potential at its pin 6. U10-3 is connected to CR2 cathode and will regulate the current through Q7 to make the same potential at its pin 2; therefore, R64 will have the same voltage across it as the drop across CR2. The current leaving Q7 enters the trigger amplifier summing node, and becomes a voltage offset equal to the drop across CR2, because R64 and the feedback resistor for the trigger amplifier have the same value. Since CR2 and the start/stop diode are matched and carry equal currents, the trigger baseline will be stable with varying VCG inputs.

4.2.17 Modulation Generator and Ramp Generator

The function generator used as a modulation source in the instrument is the Intersil 8038 (U2 on the auxiliary generator board schematic). It is fitted with an auxiliary current balancing circuit (U1) to extend its useful dynamic range. The ramp output which is not built into the chip is developed by amplitude modulating the triangle function with the square function in a balanced modulator (U5). The output signals (∿ , ∿ , ⊓⊔ , ⟋⟍, ⟍⟋) are selected in a function selector switch and fed to the modulation switches where modulation type is selected. The ramp signals have a fundamental frequency of two times that of the other waveforms.

www.valuetronics.com

SECTION 5
CALIBRATION

5.1 FACTORY REPAIR

Wavetek maintains a factory repair department for those customers not possessing the necessary personnel or test equipment to maintain the instrument. If an instrument is returned to the factory for calibration or repair, a detailed description of the specific problem should be attached to minimize turnaround time.

5.2 REQUIRED TEST EQUIPMENT

Voltmeter . Millivolt dc measurement (0.1% accuracy)
Oscilloscope, Dual Channel . . . . 200 MHz bandwidth
Counter . . . . . 20 MHz (0.01% accuracy)
50Ω Feedthru . . . . . ±0.1% accuracy, 2W
Distortion Analyzer . . . . . To 200 kHz
RG58U Coax Cable . . . 3 ft length BNC male contacts
BNC Tee . . . . . 1 male, 2 female connectors

5.3 REMOVING GENERATOR COVERS

NOTE

Before removing the covers, disconnect the instrument from the ac power source.

1. Invert the instrument and remove the four screws in the bottom cover. Remove the bottom cover and the four screws in the printed circuit board that attaches the top cover. Replace the bottom cover.

2. Turn the instrument upright; remove the top cover for access to power supply and modulation generator calibration points.

3. For access to main generator calibration points, replace the top cover, invert the instrument and remove the bottom cover.

4. When calibration is complete, secure the top cover with four screws before securing the bottom cover.

NOTE

Remove the covers only when it is necessary to make adjustments or measurements.

5.4 CALIBRATION

After referring to the following preliminary data, perform calibration, as necessary, per table 5-1. If performing partial calibration, check previous settings and adjustments for applicability.

1. All measurements made at the FUNCTION OUT connector must be terminated into a 50Ω (±0.1%) load.

WARNING

With the covers removed, several dangerous voltage points are exposed. Contact with any of these points could cause serious injury or death.

2. Start the calibration by removing covers as described in paragraph 5.3, connecting the unit to an ac source and setting the front panel switches as follows.

Set all outer controls to the open marker position.
Frequency Dial 2.0
MODULATION Switches . . . . . OFF
SYMMETRY . . . . . OFF
DC OFFSET . . . . . OFF
TRIG START/STOP . . . . . 0° CAL
All other inner controls . . . . . cw

3. Allow the unit to warm up at least 30 minutes for final calibration. Keep the instrument covers on to maintain heat. Remove covers only to make adjustments or measurements.

www.valuetronics.com

Table 5-1. Model 148A Alignment

Note: Open columns indicate previous entries are applicable.

Step	Check	Tester	Test Point	Control Setting	Adjust	Result	Remark
Note: Steps 1 through 17 are modulation generator adjustments (see figure 5-4)-instrument upright.							
1	Power Supply Regulators	DC Voltmeter	C26 +	Paragraph 5.4, step 2		+24V ±1.2V	Verify. See figure 5-4 for for locations.
2			C29 −			−24V ±1.2V	
3			C33 +		R64	+15V ±30 mV	
4			C34 −		R70	−15V ±30 mV	
5	Top of Scale Frequency	Scope	Mod Gen OUT	FREQ/PERIOD MULT: 1K I 100K FREQ/PERIOD VARIABLE: cw	R48	100 (+0.4/−0)kHz	By scope face.
6	Bottom of Scale Frequency			FREQ/PERIOD VARIABLE: ccw	R93	1kHz (+0/−40Hz)	
7	Hi Freq Symmetry			FUNCTION: ⟋⟍ FREQ/PERIOD MULT: 10 I 1K FREQ/PERIOD VARIABLE: cw	R14	Falling edges coincide	Trigger on negative going edge, not auto trigger. Display two cycles. Out of adjustment 148A and adjusted scope will give double falling edges on each ramp.
8	Lo Freq Symmetry			FREQ/PERIOD VARIABLE: ccw	R17		Steps 7 and 8 interact; repeat if necessary.
9	Lo Freq Hi Range Symmetry			FREQ/PERIOD MULT: 1K I 00K	R75		
10	Top of Scale Frequency	Counter		FREQ VARIABLE FUNCTION: ⊓⊔	R48	100 (+0.4/−0) kHz	
11	Bottom of Scale Frequency			FREQ/PERIOD VARIABLE: ccw	R93	1kHz (−40/+0Hz)	
12	∿ Zero Adjustment	DC Voltmeter		FUNCTION: ∿ FREQ/PERIOD MULT: 10I1K FREQ/PERIOD VARIABLE: cw	R34	0V ± 10mV	
13	⊓⊔ Zero Adjustment			FUNCTION: ⊓⊔	R33		
14	∿ Distortion	Distortion Analyzer		FUNCTION: ∿	R11 R12	Minimum distortion	0.5% typical
15	∿ Zero Adjustment	DC Voltmeter			R76	0V ± 10mV	
16	Ramp Gain	Scope		FUNCTION: ⟋⟍	R46	Slopes coincide	Trigger on negative going edge, not auto trigger. Display two cycles. Out of adjustment 148A and adjusted scope will give double rising edges on each ramp.

www.valuetronics.com

Table 5-1. Model 148A Alignment (Continued)

Step	Check	Tester	Test Point	Control Setting	Adjust	Result	Remark
17	Ramp Balance	Scope	Mod Gen OUT	FUNCTION: ⋀⋀	R30	Remove ± error	Steps 16 and 17 interact; repeat if necessary.
18	Ramp Zero				R81	Negative peaks on 0 Vdc	
NOTE: Steps 19 through 35 are main generator adjustments (see figure 5-5)							
19	Top of Dial Symmetry	Scope	FUNCTION OUT (terminate with 50Ω)	Paragraph 5.4, step2	R36	Equalize + and − half cycles	
20	1000:1 Symmetry			Dial: .02 FREQ MULT: 100K Adjust FREQ VERNIER for 200 Hz	R23		
21	VCG Null			FREQ VERNIER: cw FM:EXT	R14	Minimum frequency shift	Set scope for one or two cycles. Observe shift in trailing edge of cycle as EXT MOD BNC is alternately shorted and opened. Disregard jitter in cycle midpoint
22	Distortion	Distortion Analyzer		Dial: 2.0 FREQ MULT: 1K FUNCTION: ∿ FM: OFF	R87 R90	Minimum Distortion	0.15% typical
23	Top of Dial Frequency	Counter		FREQ MULT: 10K	R10	20kHz ± 400Hz	If necessary, trim frequency with:
24	100:1 Frequency			Dial: .02	R8	200 ± 4Hz	
25	X10 MHz Frequency			Dial: 2.0 FREQ MULT: 10M	C68	20 ± 0.8 MHz	C127
26	X1 MHz Frequency			FREQ MULT: 1M	C125	2MHz ± 40 kHz	C133
27	X100K Frequency			FREQ MULT: 100K	C62	200 ± 4kHz	C126
28	Capacitance Multiplier Zero	DC Voltmeter	TP1	FREQ MULT: 1K	R56	0 Vdc ± 1mV	TP2 ground
29	Capacitance Multiplier Frequency	Counter	FUNCTION OUT (terminate with50Ω)	FREQ MULT: 10	R51	Period of 0.05s ± 2ms	
30	Output Amplifier Zero	DC Voltmeter		FUNCTION: DC AMPLITUDE: ccw FREQ MULT: 10K	R347	0Vdc ± 20mV	
31	Modulator Balance	Scope		FUNCTION: ⊓⊔ AMPLITUDE: cw Modulator FUNCTION: ∿ AM: EXT	R210	Merge both traces to coincide (not necessarily at 0V).	Scope sensitivity 0.1 V/div, sweep 0.1ms/div, sync internally. 0V)

www.valuetronics.com

Table 5-1. Model 148A Alignment (Continued)

Step	Check	Tester	Test Point	Control Setting	Adjust	Result	Remark
32	Modulation Linearization	Scope	FUNCTION OUT (terminate with 50Ω)	FREQ MULT: 100K Modulator FREQ/PERIOD MULT: 10|1K	R343	See Figure 5-2	Scope sensitivity 2V/div. Connect modulation generator OUT to EXT MOD IN. Set scope display per figure 5-1.
33	Carrier balance			Modulator FUNCTION: ∧∨ and ∿	R226	See figure 5-3	
34	Multiplier Zero	DC Voltmeter		FUNCTION: ∧∨ FREQ/MULT: 1K AM: OFF	R218	0Vdc ±20mV	A low pass filter may be necessary if the dc meter is affected by the large ac signal.
35	Multiplier Gain	Scope		FUNCTION: ⊓⊔	R324	15V p-p	Sync scope to INT. Steps 30 through 35 interact; repeat if necessary.
36	Baseline Zero	DC Voltmeter		FUNCTION: ∧∨ Mode: INT TRIG	R159	0Vdc ±100mV	Rotate dial from 2.0 to.1

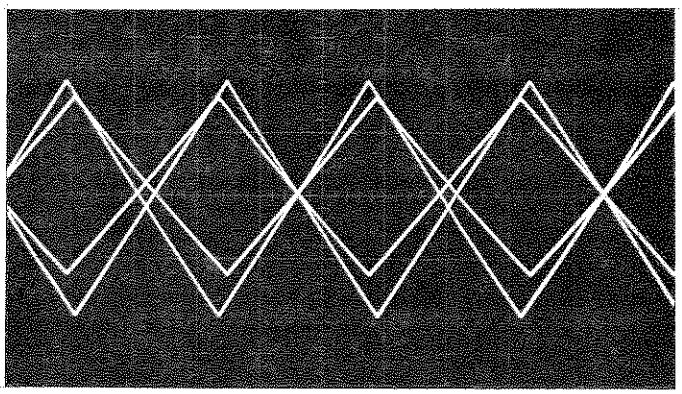

ADJUST SCOPE FOR INTERNAL TRIGGERING ON ALTERNATE CYCLES TO DISPLAY UNBALANCE IN SUPPRESSED CARRIER ENVELOPE.

Figure 5-1. Suppressed Carrier

www.valuetronics.com

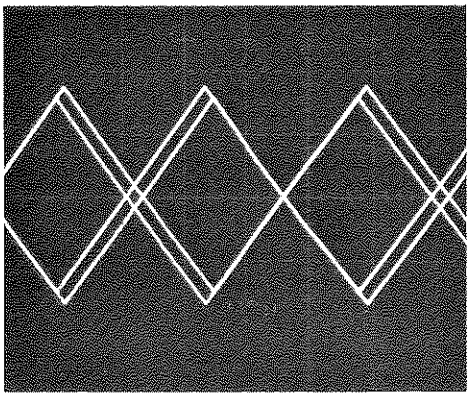

ADJUST R343 FOR SYMMETRY
BETWEEN PLUS AND MINUS PEAKS.

Figure 5-2. Modulation Linearization

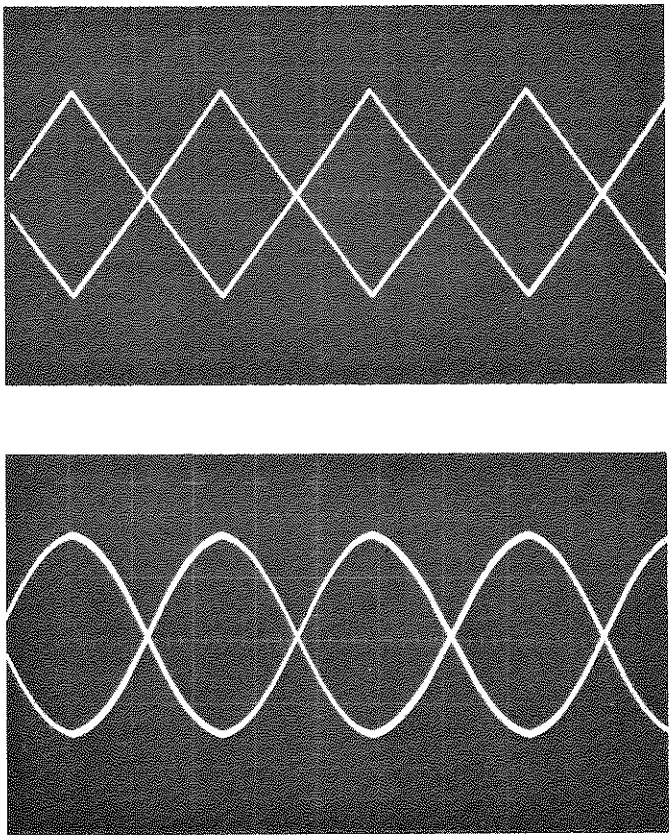

ADJUST R226 SO THAT ALTERNATE
ENVELOPE TRACES COINCIDE. ADJUST
FOR BEST COMPROMISE BETWEEN TRI-
ANGLE AND SINE MODULATION.

Figure 5-3. Carrier Balance

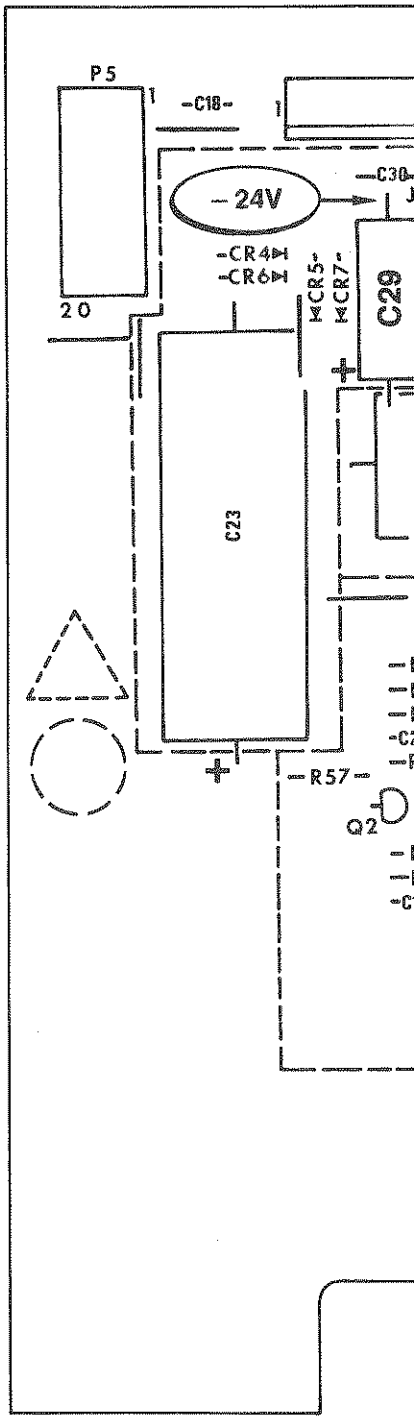

www.valuetronics.com

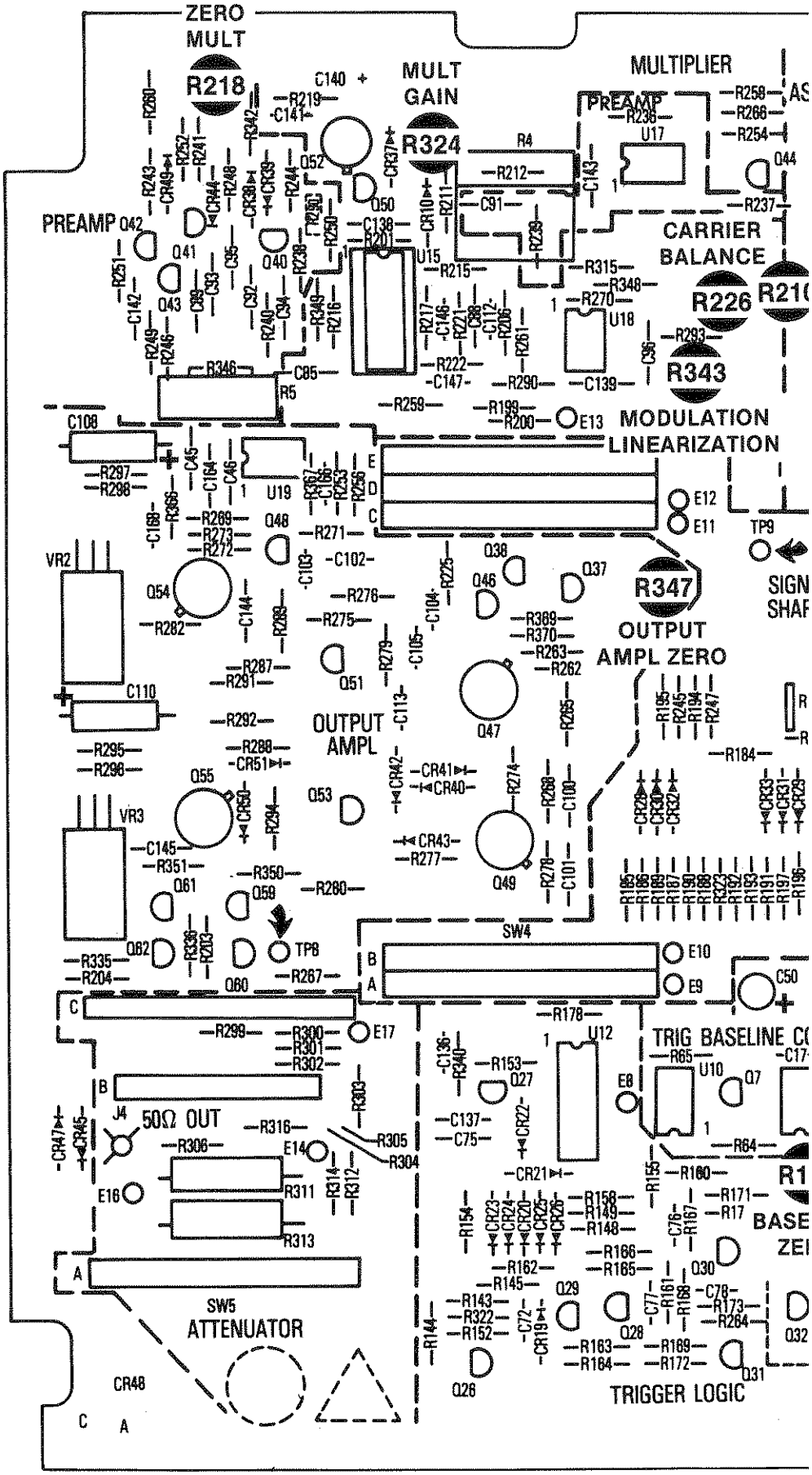

www.valuetronics.com

SECTION 6
MAINTENANCE

6.1 ROUTINE MAINTENANCE

Routine maintenance is the systematic cleaning and inspection of the instrument to prevent the occurance of trouble, to reduce downtime, and to maintain the equipment in serviceable condition.

6.1.1 Cleaning

Clean the exterior of the instrument with Windex or an equivalent cleaner when needed.

6.1.2 Inspection

Before using the instrument, inspect for physical damage. Check all knobs and BNCs for tightness. Verify that every switch will select each position.

6.2 REPAIR

The following sections discuss repair, replacement, and instrument disassembly and reassembly.

6.2.1 Repair and Replacement

Repair of the instrument is a process of defining the problem, isolating the problem, and replacing the defective component.

Before repairing the instrument review paragraph 6.5. Then, if needed, remove the covers, as described in paragraph 6.3.1. Next, isolate the problem to a circuit using table 6-1. Finally, use the tables listed in table 6-1, the information in paragraphs 6.5 and 6.4, and the drawings in section 7 to locate the defective component.

Replacement of defective components requires further disassembly of the instrument, as described in paragraph 6.3. Use best standard commercial Practices when replacing components. No special tools are required.

Reassemble the instrument as described in paragraph 6.4. Then verify the instrument operation using table 2-1.

6.2.2 Factory Repair

Wavetek maintains a factory repair department for those customers not possessing the necessary personnel or test equipment to maintain the instrument. If an instrument is returned to the factory for calibration or repair, a detailed description of the specific problem should be attached to minimize turnaround time. See paragraph 2.4 to prepare the instrument for reshipment.

6.3 DISASSEMBLY

Use the following procedure to disassemble the instrument to the extent required. Also, refer to the chassis assembly drawing 0102-00-0903, located in the rear of this manual.

6.3.1 Cover Removal

NOTE

Before disassembly, disconnect the instrument from the ac power source.

1. Invert the instrument.
2. Remove the four screws.
3. Lift off the bottom cover.
4. Remove the four screws, located in each corner of the main board, that secures the top cover to the main board.
5. Invert the instrument; lift off the cover.

6.3.2 Auxiliary Board Removal

1. Disconnect the following connectors on the auxiliary board.

Connector	Designation	Location
P6	Power Supply Cable	Right Rear
P7	Power Supply Cable	Left Rear
P8	Indicator Lamp Cable	Left Rear
P9	MOD GEN OUT coaxial	Left Front
P10	MOD GEN FM IN coaxial	Right Front
P11	EXT MOD IN coaxial	Center Front
P12	EXT TRIG IN coaxial	Center Front

www.valuetronics.com

2. Disconnect P5 at the main board.
3. Remove the following knobs from the front panel:
   MODE Selector and TRIGGER LEVEL
   FUNCTION (MODULATION GENERATOR), and MOD AMPLITUDE
   FREQ/PERIOD MULT and VARIABLE
4. Remove the four screws, located in each corner of the auxiliary board to the main board.
5. Lift out the auxiliary board.
6. Remove the two screws that secures the POWER switch to the bracket.
7. Lift out the POWER switch.
8. Remove the shield.

6.3.3 Rear Panel Removal

1. Remove the screw on the front panel that secures the green/yellow wire.
2. Set aside the rear panel.

6.3.4 Main Board Front Panel Removal

1. Invert the instrument.
2. Disconnect the following connectors.

Connector	Designation	Location
P14	50Ω OUT coaxial	Left Front
P5	SYNC coaxial	Center Rear
P1	Frequency Dial Cable	Center Front

3. Remove the following knobs from the front panel.

   FREQ MULT and VERNIER
   SYMMETRY
   DC OFFSET
   FUNCTION and TRIG START/STOP
   ATTENUATOR and AMPLITUDE
4. Separate the main board and the front panel.

The instrument is now disassembled.

6.4 REASSEMBLY

Use the following procedures to reassemble the instrument. Also, refer to the Chassis Assembly drawing 0102-00-0903, located in the rear of this manual.

6.4.1 Main Board and Front Panel Reassembly

1. Invert the front panel.
2. Install the main board, component side up, to the front panel. Align switch and control shafts with the holes in the front panel.

   Before sliding the main board on to the front panel, route the 50Ω OUT and SYNC coaxial cables, and the frequency dial cable through the notches in the main board.
3. Replace the following knobs on the front panel.
   FREQ MULT and VERNIER
   SYMMETRY
   DC OFFSET
   FUNCTION and TRIG START/STOP
   ATTENUATOR and AMPLITUDE

   NOTE

   Verify the alignment of the switches and controls after the knobs are installed.
4. Plug the following connectors into the main board.

Connector	Designator	Location
P14	50Ω OUT coaxial	Left Front
P5	SYNC coaxial	Center Rear
P1	Frequency Dial cable	Center Front

6.4.2 Rear Panel Reassembly

1. Invert the rear panel.
2. Align the rear panel and the main board.

   NOTE

   The rear panelis free floating; it does not attach to the main board.
3. Connect the green/yellow wire to the front panel.

6.4.3 Auxiliary Board Reassembly

1. Install the shield on the bottom of the auxiliary board.
2. Invert the instrument.
3. Install the auxiliary board with component side up. Align switch and control shafts with the holes in the front panel.
4. Secure the auxiliary board to the main board with four screws.

   NOTE

   Route the four coaxial cables through the notch in the auxiliary board.
5. Install the power switch to the mounting bracket.

www.valuetronics.com

6. Replace the following knobs:
   MODE Selector and TRIGGER LEVEL
   FUNCTION (MODULATION GENERATOR) and MOD AMPLITUDE
   FREQ/PERIOD MULT and VERNIER
7. Connect P5 to the main board.
8. Connect the following connectors to the auxiliary board.

Connector	Designation	Location
P6	Power Supply cable	Right Rear
P7	Power Supply cable	Left Rear
P8	Indicator Lamp cable	Left Rear
P9	MOD GEN OUT coaxial	Left Front
P10	MOD GEN FM IN coaxial	Right Front
P11	EXT MOD IN coaxial	Center Front
P12	EXT TRIG IN coaxial	Center Front

6.4.4 Cover Reassembly

1. Place the instrument in the bottom cover. This allows alignment of the front and rear panels.
2. Place the top cover on the instrument.
3. Invert the instrument.
4. Remove the bottom cover.
5. Install the four screws, located in each corner of the main board, that screws the top cover to the main board.
6. Install the bottom cover.
7. Install the four screws.
8. Invert the instrument.

Reassembly is now complete.

6.5 TROUBLESHOOTING

Table 6-1 gives an index of the troubleshooting tables by indications of common problems. The tables do not cover every possible trouble, but, when used in conjunction with circuit descriptions and schematics, will be an aid in systematically isolating faulty components.

Recommended test equipment is described in paragraph 5.2.

When encountering a problem, it is advisable to return as many of the front panel controls as possible to their initial settings and still retain the problem. The troubleshooting tables in this section generally begin at these initial settings and specify all subsequent setups. Preset the front panel controls as follows.

Control	Position
Frequency Dial	2.0
FREQ MULT (main)	1K
VERNIER	cw
SYMMETRY	OFF
DC OFFSET	OFF
FUNCTION (main)	
ATTENUATION	20I0
AMPLITUDE	cw
FREQ/PERIOD MULT (modulator)	10I1K
VARIABLE	cw
FUNCTION (modulator)	
AMPLITUDE (modulator)	MAX
MODULATION Switches	OFF
Mode Switch	CONT
TRIGGER LEVEL	MIN

WARNING

With the covers removed, several dangerous voltage points are exponsed. Contact with any of these points could cause serious injury or death.

CAUTION

To prevent damage to components, turn unit off while removing or replacing components, connectors or pc boards.

The suspected malfunctioning condition should be double checked to eliminate the possibility of improper settings or connections. Before attempting fault isolation, the unit should be checked for proper line voltage selection (refer to section 2) and that the power supplies are correct up to the main generator board. A good visual inspection of the boards and chassis wires for damage or overheating often saves much time.

Once the malfunction is defined, begin the isolation procedure by selecting an indication in table 6-1 which best describes the malfunction and proceed to the referenced troubleshooting table. Check points and circuitry mentioned in the tables will either be obviously restricted to one of the two generator boards, or the board will be named.

Follow through the checks in the troubleshooting table, using schematics and assemblies as a guide. When positive results are not obtained, perform the indicated corrective procedure.

www.valuetronics.com

Table 6-1. Fault Isolation

Indication	Table
1. Fuse blows, no dial lamp, or no outputs.	6-2
2. Main generator has no function output.	6-3
3. Main generator waveforms offset or clipped, overload indicator on, or function outputs missing when TTL sync output OK.	6-4
4. Main generator waveforms distorted.	6-5
5. Main generator sine and triangle waveform problem.	6-6
6. Main generator square and pulse waveforms bad, sine and triangle OK.	6-7
7. Main generator sync out problem.	6-8
8. Main generator frequency does not respond correctly to dial and FM modulation.	6-9
9. Main generator fixed symmetry problem.	6-10
10. Main generator variable symmetry problem.	6-11
11. Main generator problem in bottom four frequency ranges only.	6-12
12. Main generator trigger and gate problem, EXT and INT.	6-13
13. Modulation generator OUT (600Ω) bad.	6-14
14. Modulation problem: AM, FM, PM.	6-15

6.6 TROUBLESHOOTING INDIVIDUAL COMPONENTS

6.6.1 Transistor

1. A transistor is defective if more than one volt is measured across its base-emitter junction in the forward direction.
2. A transistor when used as a switch may have a few volts reverse bias voltage across base-emitter junction.
3. If the collector and emitter voltages are the same, but the base emitter voltage is less than 500 mV forward voltage (or reversed bias), the transistor is defective.
4. A transistor is defective if its base current is larger than 10% of its emitter current (calculate currents from voltage across the base and emitter series resistors).
5. In a transistor differential pair (common emitter stages), either their base voltages are the same in normal operating condition, or the one with less forward voltage across its base emitter junction should be off (no collector current); otherwise,one of the transistors is defective.

6.6.2 Diode

A diode is defective if there is greater than one volt (typically 0.7 volt) forward voltage across it.

6.6.3 Operational Amplifier

1. The "+" and "−" inputs of an operational amplifier will have less than 15 mV voltage difference when operating under normal conditions.
2. When the output of the amplifier is connected to the "−" input (voltage follower connection), the output should be the same voltage as the "+" input voltage; otherwise, the operational amplifier is defective.
3. If the output voltage stays at maximum positive, the "+" input voltage should be more positive than the "−" input voltage, or vice versa; otherwise, the operational amplifier is defective.

6.6.4 FET Transistor

1. No gate current should be drawn by the gate of an FET transistor. If so, the transistor is defective.
2. The gate-to-source voltage is always reverse biased under a normal operating condition; e.g., the source voltage is more positive than the gate voltage for 2N5485, and the source voltage is more negative than gate voltage for a 2N5462. Otherwise, the FET is defective.
3. If the device supplying gate voltage is an FET saturates, the FET has too large a Vgs (pinch off) for the circuit and should be replaced.

6.6.5 Capacitor

1. Shorted capacitors have zero volts across their terminals.
2. Opened capacitor can be located (but not always) by using a good capacitor connected in parallel with the capacitor under test and observing the resulting effect.

www.valuetronics.com

Table 6-2. Power Supplies

Indication: Fuse Blows, no dial lamp, or no outputs.

Check	Corrective Procedure
1. Check that fuse is good. Ensure line selector card in power connector matches line voltage.	Replace fuse; check for normal operation.
2. Turn unit off while removing or replacing connectors. Remove P6, P7 molex connectors on auxiliary generator board. Determine that fuse holds up. Reconnect P6.	a. Power connector. b. Primary wiring. c. Transformer.
3. Remove P1, P2, P3, P4 connectors to regulators on rear panel. Check + end of C24 for +28.0 Vdc ±10% and − end of C21 for −26.5 Vdc ±10%.	a. CR8 - CR11. b. C21, C24. c. Transformer secondary.
4. Reconnect P7. Check + end of C22 for +40.5 Vdc ±10% and − end of C23 for −40.5 Vdc ±10%.	a. CR4 - CR7. b. C22, C23. c. Transformer secondary.
5. Disconnect P5 and reconnect P4 to VR4 (7824). Check + end of C26 for +24 Vdc ±5%.	VR4 circuit.
6. Reconnect P1 to VR1 (7924). Check − end of C29 for −24 Vdc ±5%.	VR1 circuit.
7. Reconnect P3 to VR3 (7812). Check + end of C33 for +15 Vdc.	a. R64 adjustment. b. VR3, U7 circuit. c. Excessive loading by auxiliary generator board. Look for overheated components and use jumpers to aid in isolation.
8. Reconnect P2 to VR2 (7912). Check − end of C34 for −15 Vdc.	a. R70 adjustment. b. VR2, U7 circuit. c. Excessive loading by auxiliary generator board. Look for overheated components and use jumpers to aid in isolation.
9. Reconnect P5. Check the +24 Vdc and ±15 Vdc supplies.	Excessive loading by main generator board. Look for overheated components.

www.valuetronics.com

Table 6-3. Function Generator Loop

Indication: Main generator has no function output.

Check	Corrective Procedure
1. Set all controls in their initial positions (refer to paragraph 6.5).	
2. Check TP3 for a ±1.25V, 2 kHz triangle. If good, proceed to table 6-4.	
3. Check J5-13 for +15 Vdc, J5-5 for −15 Vdc, J5-3 for +24 Vdc, and J5-1 for −24 Vdc.	Table 6-2.
4. Check cathode CR27 for approximately +1.25 Vdc. Check CR27.	Table 6-13.
5. Check U5-2 for +10 Vdc and U6-2 for −10 Vdc. Use oscilloscope and high impedance probe with dial at 2.0.	Table 6-9.
6. Check for same dc level at FB1 and TP3, limited by saturation of triangle amplifier.	Troubleshoot triangle amplifier.
7. Check for + or −2.5 Vdc at the junction of CR17 and CR18, with the opposite polarity of the voltage at TP3.	a. CR6, CR7. b. U14 circuitry. c. Current switch circuit. d. Q26, CR19.
8. Check that voltages at cathode CR13 and anode CR16 are the same as voltages at junction of CR17 and CR18.	a. Current switch circuit. b. Q26, CR19.
9. Check diodes CR13 - CR16.	Replace faulty diode.
10. Lift one end of R74 (10Ω) so that a ±1.25V, 2 kHz triangular waveform from an external source can be injected into the triangle amplifier. Check TP3 for a +1.25V triangle.	Troubleshoot triangle amplifier.
11. Adjust amplitude and offset of external signal slightly until a ±2V square appears at junction CR17, CR18.	Troubleshoot the hysteresis switch.
12. Check for ±2V square at cathode CR13 and anode CR16. Remove external signal and replace R74.	a. Current switch. b. Q26, CR19.

Table 6-4. Output Amplifier

Indication: Main generator waveforms offset or clipped, overload indicator on, or function outputs missing when TTL sync output OK.

Check	Corrective Procedure
1. Set all controls in their initial positions (refer to paragraph 6.5).	
2. Check R246/R249 for function waveforms at 2.0V peak amplitude from ground.	Table 6-5.

www.valuetronics.com

Table 6-4. Output Amplifier (Continued)

Indication: *Main generator waveforms offset or clipped, overload indicator on, or function outputs missing when TTL sync output OK.*

Check	Corrective Procedure
3. Check J5-3 for +24 Vdc ±5% and J5-1 for −24 Vdc ±5%.	Table 6-2.
4. Check for <5 Vdc across R297 and R295.	a. 5 Vdc indicates Q54 and Q55 shorted. b. >5 Vdc indicates VR2, VR3 also failed.
5. Check waveforms at TP8.	Troubleshoot output amplifier and dc offset circuitry.
6. Check attenuator switches and coax J4 to J6.	

Table 6-5. Waveform Generation

Indication: *Main generator waveforms distorted.*

Check	Corrective Procedure
1. Set all controls in their initial positions (refer to paragraph 6.5).	
2. Check ±1.25V, 2 kHz triangle at TP4.	Table 6-6.
3. Check 2.0 Vpp square at collector Q57.	Table 6-7.
4. Check all waveforms at the U15-9. Amplitudes should be ±0.50V for bipolar waveforms.	a. SW4-A,B,C,D. b. CR28 - CR37 signal shaper circuitry.
5. Check U15-8 for −2.4 Vdc	U8 circuit on auxiliary generator board.
6. Check waveforms at emitters of Q52 for 0.53V peak amplitude around +13.4 Vdc.	a. Calibration of R210, R218, R226, R324. b. U15, Q50, Q52 circuit.
7. Check R246/R249 for ±2.2V waveforms with no significant offset.	Final preamplifier Q40 - Q43 and U17.
8. Go to table 6-4.	

www.valuetronics.com

Table 6-6. Triangle Amplifiers

Indication: Main generator sine and triangle waveform problem.

Check	Corrective Procedure
1. Set all controls in their initial positions (refer to paragraph 6.5).	
2. Check triangle at FB1 with oscilloscope and high impedance probe. If waveform has a problem here (especially at lowered dial settings), yet has no significant offset and is identical to waveform at TP3, go to table 6-10, step 14.	
3. Check if waveform at TP3 is identical to waveform at FB1.	Troubleshoot triangle amplifier Q8 - Q11.
4. Check for an amplitude of ±1.25V at TP3.	a. R83, R84, R87 - R90, CR6, CR7. b. U14 circuit.
5. Waveform at TP4 should be identical to waveform at TP3.	Troubleshoot triangle buffer circuitry Q17 - Q22.
6. Verify that square disable signal is defeating square at collector Q57 when function selector is in dc, sine and triangle.	SW4-B.
7. Go to table 6-5.	

Table 6-7. Square Wave Generation

Indication: Main generator square and pulse waveforms bad, sine and triangle OK.

Check	Corrective Procedure
1. Set all controls in their initial positions (refer to paragraph 6.5).	
2. Check base of Q58 for a 2.5V square wave, offset by −1.75V.	U14, Q15, CR8, CR9.
3. Verify square disable signal at R151 is not grounded.	SW4-B.
4. Check collector Q57 for a ±1.0V square.	Q57, Q58 circuit.
5. Go to table 6-5.	

www.valuetronics.com

Table 6-8. Sync Circuits

Indication: Main generator sync out problem.

Check	Corrective Procedure
1. Set all controls in their initial positions (refer to paragraph 6.5).	
2. Check base of Q16 for a 2.5V square wave, offset by −1.75V.	U14, Q15, CR8, CR9.
3. Check collector Q23 for a TTL level square.	Q16, Q23 circuit.
4. Check wiring J3 to J5.	

Table 6-9. VCG Summing Amplifier

Indication: Main generator frequency does not respond correctly to dial and FM modulation.

Check	Corrective Procedure
1. Set all controls at their initial positions (refer to paragraph 6.5).	
2. Check for +15 Vdc at J5-13 and −15 Vdc at J5-5.	Table 6-2.
3. Check for approximately +15 Vdc to +150 mV dc at J1-2 as dial is rotated from 2.0 to .02.	a. Wiring J1 to dial. b. Dial potentiometer R1.
4. Check for 0 Vdc ±5 mV at U1-2 as dial is rotated. Use oscilloscope and high impedance probe for this and other VCG measurements.	U1 circuit.
5. Check for approximately −5 to 0 Vdc at anode of CR1 as dial is rotated from 2.0 to .02.	U1 circuit.
6. Proceed to table 6-10.	

Table 6-10. VCG Current Sources

Indication: Main generator fixed symmetry problem.

Check	Corrective Procedure
1. Set all controls in their initial positions (refer to paragraph 6.5).	
2. Ensure anode of CR1 does not attempt to go positive with dial at .02 and frequency vernier ccw. Use oscilloscope and high impedance probe for this and other VCG measurements.	a. Calibration of R8 and R14. b. U1 input offset.
3. Check U4-2 for −5 to 0 Vdc as dial is rotated from 2.0 to .02.	U4, Q2.
4. Check U3-2 for −2.5 to 0 Vdc as dial is rotated from 2.0 to .02.	U3.
5. Check U2-2 for 0 Vdc as dial is rotated.	U2, Q1.

www.valuetronics.com

Table 6-10. VCG Current Sources (Continued)

Indication: Main generator fixed symmetry problem.

Check	Corrective Procedure
6. Ensure gate voltage of Q1 and Q2 are not saturating and that there is no voltage across R25 and R27 as dial is rotated to .02 with frequency vernier ccw.	a. R23 adjustment. b. Q1, Q2. c. U2 - U4 input offset.
7. Check U5-3 for +10 to +15 Vdc and U6-3 for −10 to −15 Vdc as dial is rotated from 2.0 to .02.	a. R36 adjustment. b. U5, U6 input bias. c. SW2 not closed.
8. Check J5-3 for +24 Vdc ±5% and J5-1 for −24 Vdc ±5%.	Table 6-2.
9. Check U5-2 for +10 to +15 Vdc as dial is rotated from 2.0 to .02.	Q3, Q4, U5.
10. Check U6-2 for −10 to −15 Vdc as dial is rotated from 2.0 to .02.	Q5, Q6, CR2, U6.
11. Ensure gate voltages of Q4 and Q5 are not saturating and that there is no voltage across R42 and R44 as dial is rotated to .02 with frequency vernier ccw.	a. Q4, Q5. b. Loading from U9, U10.
12. Verify operation of SW1-C,D on upper four frequency ranges.	
13. VCG circuit is good; investigate triangle waveshape as a source of symmetry problem. If triangle has significantly different waveshape and/or dc offset at TP3 as it does at FB1, go to table 6-6, step 3.	
14. Check if problem is cleared up by lifting out of circuit one end of CR27.	a. CR27 leaking. b. CR27 not reverse biased; go to table 6-13.
15. Determine if triangle is nonlinear on a particular frequency range.	C61 - C65, C125, C126, C133 leaky.
16. Determine if triangle is nonlinear toward the bottom of all frequency ranges.	C32, C34, C67, C68, C127, Q8, CR13 - CR16 leaky.
17. If triangle is discontinuous at the peaks, the current switch may be operating significantly off from ±2V levels, or it may be switching slowly.	a. Hysteresis switch. b .Current switch. c. CR19, Q26. d. CR6 - CR9.

www.valuetronics.com

Table 6-11. VCG Amplifiers

Indication: Main generator variable symmetry problem.

Check	Corrective Procedure
1. Verify checks in table 6-10, steps 1 through 6.	
2. Set SYMMETRY control to midposition. Verify function output is roughly symmetrical and has a frequency of approximately 200 Hz.	a. R2, SW2 control. b. Wiring to E21, E22.
3. Check that waveform symmetry varies from approximately 1:19 to 19:1 as the SYMMETRY control is rotated.	a. Value of R2 with trim is too far from optimum value of 45K. b. Q1, Q2.
4. SYMMETRY control is OK.	

Table 6-12. Capacitance Multiplier

Indication: Main generator problem in bottom four frequency ranges only.

Check	Corrective Procedure
1. Set all controls in their initial positions (refer to paragraph 6.5).	
2. Check U7-3 and U8-3 for 0 Vdc.	a. SW1-B. b. U7, U8 input bias.
3. Check U7-6 for 0 Vdc ±100 mV.	U7 circuit.
4. Check U8-6 for 0 Vdc ±1 mV.	a. R56 adjustment. b. U8 circuit.
5. Set frequency multiplier to ×10. Verify that U7-6 amplifies the signal at U7-3 within saturation limits.	a. U7 circuit. b. SW1-B.
6. Check U8-6 for a composite square-triangle waveform whose square component is reduced as the dial setting is reduced. Check for high frequency oscillations.	a. U8, SW1-A circuit. b. C26. c. C29.
7. Check linearity of ±1.25V triangle at FB1.	a. U7, U8. b. C26.
8. Check frequency accuracy.	a. R51 adjustment. b. R58, SW1-A. c. C26. d. R62, R63.

www.valuetronics.com

Table 6-12. Capacitance Multiplier (Continued)

Indication: Main generator problem in bottom four frequency ranges only.

Check	Corrective Procedure
9. Check frequency agreement of lowest three ranges with ×10.	a. R59 - R61, SW1-A. b. C26, U7, U8. c. Extremely small drain on integrating current; refer to table 6-10, steps 13 through 17.
10. Verify symmetry at .1 on dial on ×10 range.	a. R56 adjustment. b. U8 circuit.

Table 6-13. Trigger Circuitry

Indication: Main generator trigger and gate problem, EXT and INT.

Check	Corrective Procedure
1. Set all controls in their initial positions (refer to paragraph 6.5).	
2. Go to external gate mode and triangle function on main generator. The following measurements should be taken with a scope and high impedance probe. Unless otherwise indicated, reference designations used apply to the main generator board.	
3. Check TRIG OUT signal at J5-9 for a TTL high to low transition as TRIGGER LEVEL control is brought cw through midposition.	Q1 - Q3 circuit on auxiliary generator board.
4. Check U13-14 for +5 Vdc ±5%.	VR1.
5. Check U13-8 for a TTL high to low transition as TRIGGER LEVEL control is brought cw through midposition. Check U13-8 for a TTL high when in external trigger mode and a TTL low when in continuous mode. Leave in continuous mode.	a. U13. b. SW1-A on auxiliary generator board.
6. Check U12-3 for a TTL low.	U12.
7. Check CR21 cathode for approximately −0.25 Vdc.	a. Q27, CR20 - CR26. b. U9, U10, Q7, CR2. c. Q28 - Q32 amplifier.
8. Check cathode CR27 for +1.25 Vdc.	a. R159 adjustment. b. U9, U10, Q7, CR2. c. Q28 - Q32 amplifier.
9. Ensure ±1.25V triangle at TP3.	a. CR27. b. Table 6-3.

www.valuetronics.com

Table 6-13. Trigger Circuitry (Continued)

Indication: Main generator trigger and gate problem, EXT and INT.

Check	Corrective Procedure
10. Go to external gate mode and verify ±1.25V triangle at TP3 with TRIGGER LEVEL control cw. With TRIGGER LEVEL control ccw, CR27 should have −0.7 Vdc on its cathode and TP3 should be near 0 Vdc.	a. R159 adjustment. b. Q28 - Q32 amplifier. c. Q26, U12. d. U9, U10, Q7, CR2.
11. TP3 should remain near 0 Vdc as dial is rotated to .02 and back to 2.0.	U9, U10, Q7, CR2.
12. Rotate TRIG START/STOP control cw. TP3 should immediately go to −1.25 Vdc, then move positive to near +1.25 Vdc, where the ±1.25V triangle will appear. Return control to 0° CAL.	R4-SW6 control.
13. Set main generator to 2 MHz frequency and external trigger mode. Apply an approximate 1 MHz square from an external generator to the EXT TRIG IN connector. Check that as TRIGGER LEVEL control is brought to mid-position, an approximate 20 ns negative pulse appears at U13-8 following the positive-going edge of the external square.	a. J1 to J12 wiring on auxiliary generator board. b. SW1-A,B on auxiliary generator board. c. Q1 - Q3 circuit on auxiliary generator board. d. U13, C74.
14. Check function output for one triangle cycle followed by a 0 Vdc baseline for each externally triggered cycle.	a. Q28 - Q32 amplifier. b. Q26, Q27 circuits.
15. Remove external generator; check modulator OUT (600Ω) for a 10V p-p (open circuit), 1 kHz sine.	Table 6-14.
16. Set modulation generator for a 100 kHz triangle and select internal trigger mode. Connect scope to display both the modulator output and function output. Check for proper triggering of the function output along the positive-going slope of the modulator triangle as trigger level is adjusted.	a. SW1-B on auxiliary generator board. b. R1, CR1, CR2 on auxiliary generator board.
17. Go to internal gate mode and check for proper gating action as TRIGGER LEVEL control is rotated.	SW1-B on auxiliary generator board.

Table 6-14. Modulation Generator

Indication: Modulation generator OUT (600Ω) bad.

Check	Corrective Procedure
1. Set all controls at their initial positions (refer to paragraph 6.5).	
2. Check that main generator is functioning properly.	Indicated table.
3. The following checks should be taken on the auxiliary generator board with an oscilloscope and high impedance probe. Check that U1-7 varies from −3 to 0 Vdc as modulation frequency VARIABLE is rotated from maximum to minimum.	R6, U1 circuit.

www.valuetronics.com

Table 6-14. Modulation Generator (Continued)

Indication: Modulation generator OUT (600Ω) bad.

Check	Corrective Procedure
4. Ensure U1-7 varies with a signal applied to modulator FM IN connector. Remove signal.	J3 to J10 wiring.
5. Check that U1-1 varies from −3.25 to 0 Vdc as frequency VARIABLE is rotated from maximum to minimum.	a. U1 circuit. b. U2 circuit.
6. Check U2-2,3,9 for −5.6 to −8.8V sine, −4.8 to −9.6V triangle, and −9.6 to −14.4V square.	U2 circuit.
7. Check modulation OUT (600Ω) for ±5V (open circuit) sine, triangle and square.	a. SW5-C. b. U3 circuit. c. J9 to J4 wiring.
8. Check modulation frequency multiplier switch frequencies and 100:1 VARIABLE control.	a. SW6-A. b. C1 - C4, U2.
9. Check modulation sweep functions for +5V peak at twice modulation frequency.	a. R30, R33, R46, R81 adjustments. b. U5, U6 circuits. c. SW5-A,B.

Table 6-15. AM, FM, PM Circuits

Indication: Modulation problem: AM, FM, PM.

Check	Corrective Procedure
1. Set all controls in their initial positions (refer to paragraph 6.5).	
2. Check modulator OUT (600Ω) for 5V peak (open circuit) on all modulator waveforms.	Table 6-14.
3. Set AM MODULATION switch to INT. Check TP-6 on main generator board for 2.5V peak waveforms, variable with modulation amplitude control.	J2/P2 or R5 on auxiliary generator board.
4. Set main generator for a 200 kHz sine and the modulator for an approximate 1 kHz sine. Set the AM MODULATION switch to internal. Check U15-8 on the main generator board for an amplitude variable (3Vp-p max) 1 kHz sine offset around −1.2Vdc.	a. U18 circuit on main generator board. b. SW2 on auxiliary generator board.
5. Check function output for 0 to 100% AM, variable with modulation amplitude control	a. R210, R218, R226, R324 adjustments on main generator board. b. U15 circuit on main generator board.

www.valuetronics.com

Table 6-15. AM, FM, PM Circuits (Continued)

Indication: Modulation problem: AM, FM, PM.

	Check	Corrective Procedure
6.	Set AM switch to external and connect modulator OUT (600Ω) to EXT MOD IN. Check U15-8 on main generator for a 1 kHz ±3V sine, offset by +0.2 Vdc	J2 to J11 wiring on SW2 on auxiliary generator board.
7.	Check function output for suppressed carrier modulation signal.	U15 circuit on main generator board.
8.	Set AM switch to OFF. Leave modulator OUT (600Ω) connected to EXT MOD IN. Set modulator amplitude to maximum.	
9.	Verify that main generator frequency follows dial settings.	Table 6-9.
10.	Set modulator FUNCTION to positive-going ramp, modulator frequency to .1 I 10 Hz range, VARIABLE to midposition. Set main generator frequency to .02X10 kHz. check for a sweeping frequency at function output with FM switch in both INT and EXT.	SW3 on auxiliary generator board.
11.	Turn FM switch OFF. Set modulator for a 1 kHz square. Check for a differentiated signal at the wiper of SW1-F on main gnerator board. The signal should be present on upper six main generator frequency ranges when the PM switch is in INT and EXT.	a. SW4 on auxiliary generator board. b. SW1-F,C3 - C7, C131 on main generator board.

www.valuetronics.com

www.valuetronics.com

SECTION 7
PARTS AND SCHEMATICS

7.1 DRAWINGS

The following assembly drawings (with parts lists) and schematics are in the arrangement shown below.

7.2 ADDENDA

Under Wavetek's product improvement program, the latest electronic designs and circuits are incorporated into each WAvetek instrument as quickly as development and testing permit. Because of the time needed to compose and print instruction manuals, it is not always possible to include the most recent changes in the initial printing. Whenever this occurs, addendum pages are prepared to sumarize the changes made and are inserted immediately inside the rear cover. If no such pages exist, the manual is correct as printed.

7.3 ORDERING PARTS

When ordering spare parts, please specify part number, circuit reference, board, serial number of unit, and, if applicable, the function performed.

NOTE

An assembly drawing number is not necessarily the assembly part number. However, the assembly parts list number is the assembly part number.

Drawing	Drawing No.
Instrument Schematic	0004-00-0176
Chassis Assembly	0102-00-0903
Chassis Parts List	1101-00-0903
Main Board Schematic	0103-00-0872
Main Board Assembly	0101-000872
Main Board Parts List	1100-00-0872
Switch Assemblies	0102-00-0039
Switch Assemblies Parts List	1202-00-0039
Auxiliary Board Schematic	0103-00-0811
Auxiliary Board Assembly	0101-00-0811
Auxiliary Board Parts List	1100-00-0811
Switch Assemblies	0102-00-0040
Switch Assemblies Parts List	1202-00-0040

www.valuetronics.com

THIS DOCUMENT CONTAINS PROPRIETARY INFORMATION AND DESIGN RIGHTS BELONGING TO WAVETEK AND MAY NOT BE REPRODUCED FOR ANY REASON EXCEPT CALIBRATION, OPERATION, AND MAINTENANCE WITHOUT WRITTEN AUTHORIZATION.

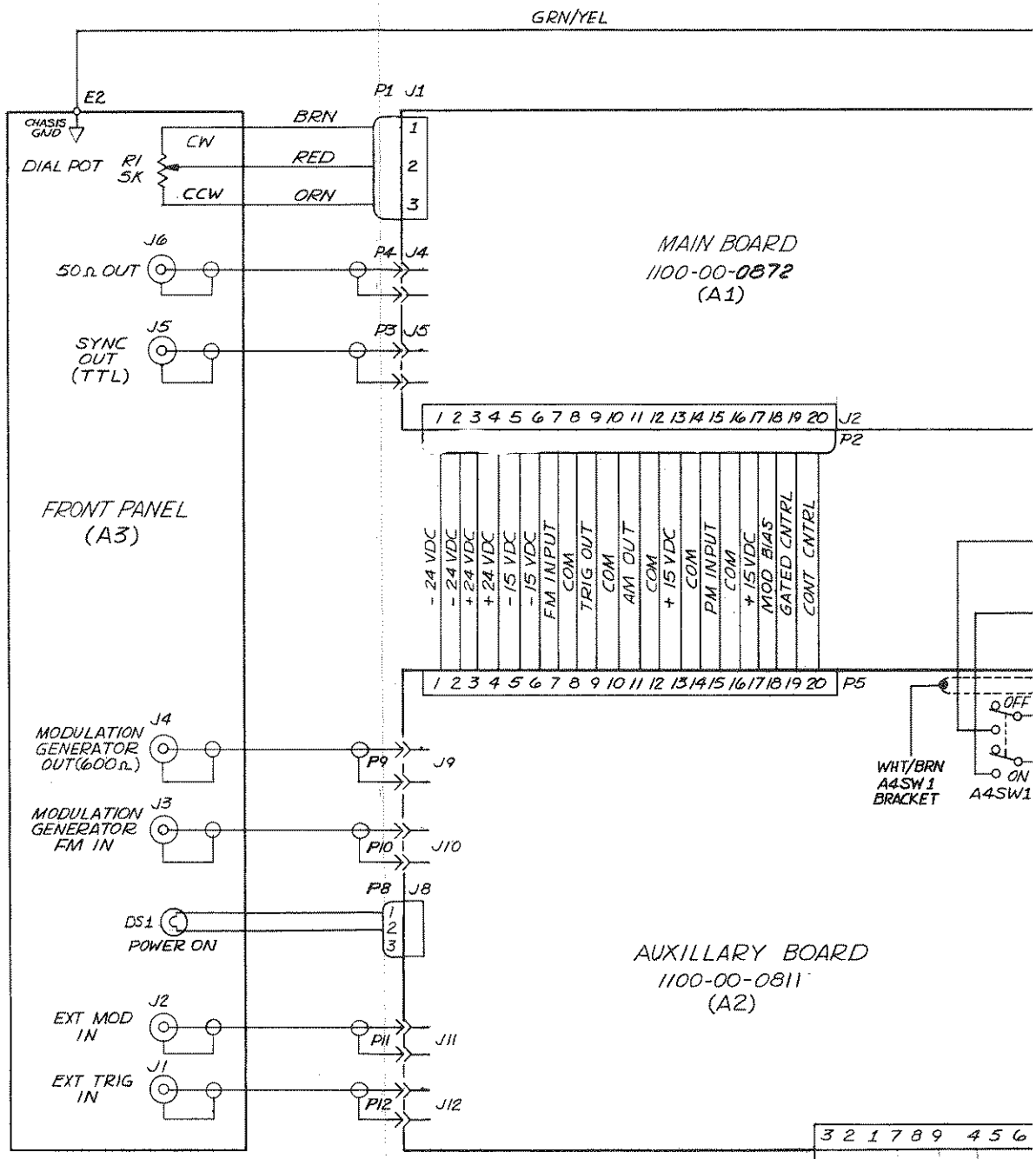

LAST REF. DES. USED

R1	E1	F1
P12	T1	VR4
J12	SW1	

NOTE: UNLESS OTHERWISE SPECIFIED

www.valuetronics.com

THIS DOCUMENT CONTAINS PROPRIETARY INFORMATION AND DESIGN RIGHTS BELONGING TO WAVETEK AND MAY NOT BE REPRODUCED FOR ANY REASON EXCEPT CALIBRATION, OPERATION, AND MAINTENANCE WITHOUT WRITTEN AUTHORIZATION.

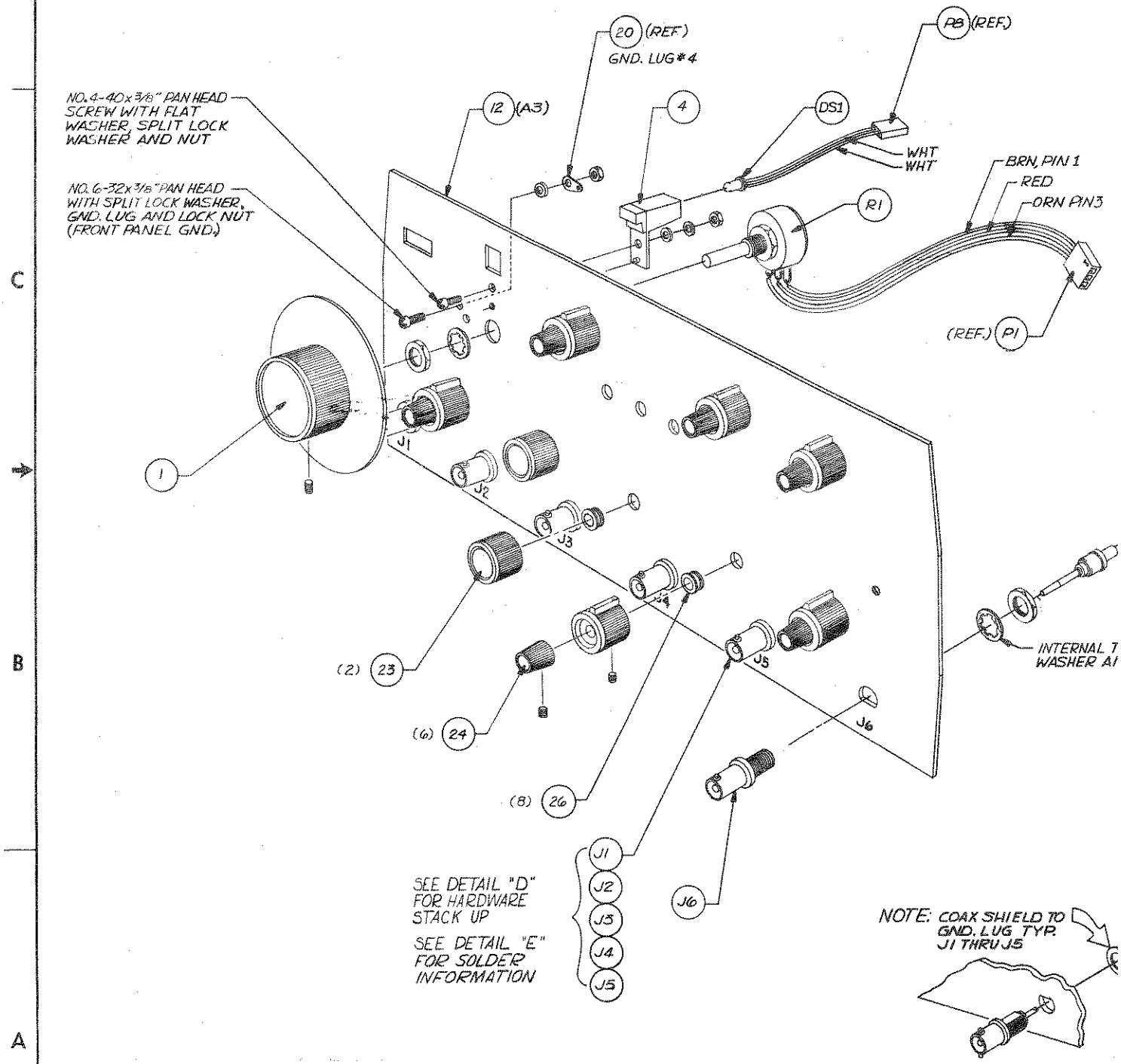

DETAIL "D"
TYP. HARDWARE STA

NOTE UNLESS OTHERWISE SPECIFIED

www.valuetronics.com

THIS DOCUMENT CONTAINS PROPRIETARY INFORMATION AND DESIGN RIGHTS BELONGING TO WAVETEK AND MAY NOT BE REPRODUCED FOR ANY REASON EXCEPT CALIBRATION, OPERATION, AND MAINTENANCE WITHOUT WRITTEN AUTHORIZATION.

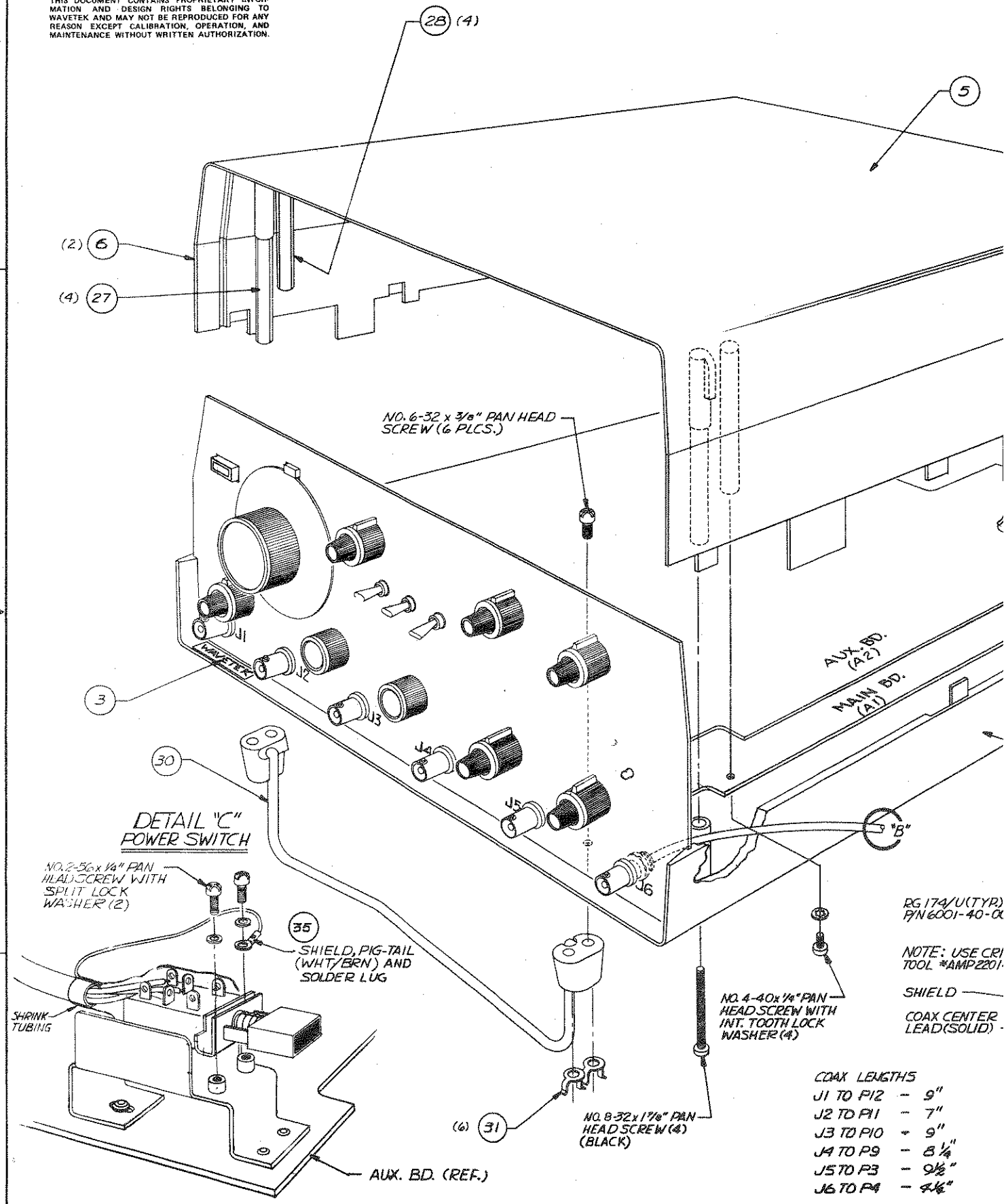

NOTE: UNLESS OTHERWISE SPECIFIED

www.valuetronics.com

THIS DOCUMENT CONTAINS PROPRIETARY INFORMATION AND DESIGN RIGHTS BELONGING TO WAVETEK AND MAY NOT BE REPRODUCED FOR ANY REASON EXCEPT CALIBRATION, OPERATION, AND MAINTENANCE WITHOUT WRITTEN AUTHORIZATION.

REFERENCE DESIGNATORS	PART DESCRIPTION	ORIG-MFGR-PART-NO	MFGR	WAVETEK NO.	QTY/PT
NONE	ASSY DRWG,MAIN BD	0101-00-08712	WVTK	0101-00-0872	1
NONE	SCHEMATIC,MAIN BD	0103-00-0872	WVTK	0103-00-0872	1
NONE	ASSY,SWITCHES MAINBOARD	148-0039	WVTK	1202-00-0039	1
NONE	SPACER	8480	WVTK	1400-00-0653	3
C104 C105 C131 C135T C166 C56 C78 C79	CAP,CER,5PF,1KV	DD-050	CRL	1500-00-5011	8
C113 C118 C51	CAP,CER,10PF,1KV	DD-100	CRL	1500-01-0011	3
C33	CAP,CER,100PF,1KV	DD-101	CRL	1500-01-0111	1
C115 C116 C120 C20 C23 C29 C55	CAP,CER,.001MF,1KV	DD-102	ARCO	1500-01-0211	7
C1 C102 C103 C136 C139 C142 C164 C165 C17 C2 C30 C31 C35 C37 C38 C47 C48 C52 C54 C57 C59 C69 C70 C71 C72 C76 C77 C81 C88 C89 C92 C93 C96 C97	CAP,CER,MN,.01MF,50V	CAC0225U1032100A	CORNG	1500-01-0310	34
C100 C101 C135 C137 C138 C143 C144 C145 C169 C24 C25 C27 C28 C45 C46 C53 C58 C75 C80 C85 C91 C94 C95	CAP,CER,MON,.1MF,50V	CAC032U1042050A	CORNG	1500-01-0405	23
C8	CAP,CER,150PF,1KV	DD-151	ARCO	1500-01-5111	1

WAVETEK PARTS LIST — TITLE: PCA,MAINBOARD — ASSEMBLY NO. 1100-00-0872 — PAGE: 1 — REV F

REFERENCE DESIGNATORS	PART DESCRIPTIO
C5	CAP,MYLAR,.01MF
C6	CAP,MYLAR,.1MF,
C26 C7	CAP,MYLAR,100V,
C125 C68	VARI,3.5-13PF,2
C62	VARI,15-60PF,20
C134 C18 C19	CAP,TANT,1MF,35
C140 C167 C170 C50 C73	CAP,TANT,22MF,2
	CAP SET,POLYC MIXED MATCHED 8
C63	CAP,POLYC,.01MF PART OF 1509-80 QTY(1)
C64	CAP,POLYC,.1MF, PART OF 1509-80 QTY(1)
C65	CAP,POLYC,1MF,1 PART OF 1509-80 QTY(1)
NA	MAINBOARD
U15A	SKT,IC,14PIN

WAVETEK PARTS LIST — TITLE: PCA,MAINBOARD

REFERENCE DESIGNATORS	PART DESCRIPTION	ORIG-MFGR-PART-NO	MFGR	WAVETEK NO.	QTY/PT
C146	CAP,CER,22PF,1KV	DD-220	ARCO	1500-02-2011	1
C34 C36	CAP,CER,220PF,1KV	DD-221	ARCO	1500-02-2111	2
C141	CAP,CER,.0022,1KV	DD-222 LONG LEAD	CRL	1500-02-2201	1
C21 C22	CAP,CER,330PF,1KV	DD-331	ARCO	1500-03-3111	2
C168	CAP,CER,560PF,1KV	DD-561 LONG LEAD	ARCO	1500-05-6101	1
C147	CAP,CER,68PF,1KV	DD-680	CRL	1500-06-8001	1
C112	CAP,CER,680PF,1KV	DD-681	ARCO	1500-06-8111	1
C3	CAP,MICA,100PF,500V	DM15-101J	ARCO	1500-11-0100	1
C32	CAP,MICA,15PF,500V	DM15-150J	ARCO	1500-11-5000	1
C67	CAP,MICA,20PF,500V	DM15-200J	ARCO	1500-12-0000	1
C74	CAP,MICA,220PF,500V	DM15-221J	ARCO	1500-12-2100	1
C126I	CAP,MICA,30PF,500V	DM15-300J	ARCO	1500-13-0000	1
C40 C43	CAP,MICA,47PF,500V	DM15-470J	ARCO	1500-14-7000	2
C41 C42	CAP,MICA,68PF,500V	DM15-680J	ARCO	1500-16-8000	2
C61	CAP,MICA,820PF,300V	DM15-821F	ARCO	1500-18-2101	1
C108 C110	CAP,ELECT,5MF,25V	LMT-5-25	CDE	1500-30-5020	2
C4	CAP,MYLAR,.001MF100V	225P10291WD3	SPRAG	1500-41-0204	1

WAVETEK PARTS LIST — TITLE: PCA,MAINBOARD — ASSEMBLY NO. 1100-00-0872 — PAGE: 2 — REV F

REFERENCE DESIGNATORS	PART DESCRIPTIO
J4 J5	COAX SOCKET
NONE	SPRING SOCKET
J1	3 POS HEADER
NONE	TERM
NONE	TERM
NONE	PIN,MALE
J2	HEADER,20 PIN
NONE	HEAT SINK
NONE	TRANSIPAD
NONE	HEATSINK
FB1	FERRITE BEAD
R10	POT,TRIM,1K
R159 R210 R226 R56	POT,TRIM,10K
R14 R23 R343 R347 R8	POT,TRIM,100K
R218 R36	POT,TRIM,200
R324 R51	POT,TRIM,2K
R87 R90	POT,TRIM,500

WAVETEK PARTS LIST — TITLE: PCA,MAINBOARD

NOTE: UNLESS OTHERWISE SPECIFIED

BISHOP GRAPHICS/ACCUPRESS REORDER NO. A-5884

www.valuetronics.com

THIS DOCUMENT CONTAINS PROPRIETARY INFORMATION AND DESIGN RIGHTS BELONGING TO WAVETEK AND MAY NOT BE REPRODUCED FOR ANY REASON EXCEPT CALIBRATION, OPERATION, AND MAINTENANCE WITHOUT WRITTEN AUTHORIZATION.

REFERENCE DESIGNATORS	PART DESCRIPTION	ORIG-MFGR-PART-NO	MFGR	WAVETEK NO.	QTY/PT
R236	RES,MF,1/8W,1%,19.6K	RN55D-1962F	TRW	4701-03-1962	1
R187 R193 R224 R237 R239 R253 R302 R316	RES,MF,1/8W,1%,200	RN55D-2000F	TRW	4701-03-2000	8
R21 R215 R22 R26 R326 R330	RES,MF,1/8W,1%,2K	RN55D-2001F	TRW	4701-03-2001	6
R290T	RES,MF,1/8W,1%,20.5K	RN55D-2052F	TRW	4701-03-2052	1
R199	RES,MF,1/8W,1%,215	RN55D-2150F	TRW	4701-03-2150	1
R171 R184 R268T R278T R291 R292	RES,MF,1/8W,1%,21.5	RN55D-21R5F	TRW	4701-03-2159	6
R105	RES,MF,1/8W,1%,221	RN55D-2210F	TRW	4701-03-2210	1
R258	RES,MF,1/8W,1%,2.21K	RN55D-2211F	TRW	4701-03-2211	1
R250 R261	RES,MF,1/8W,1%,2.37K	RN55D-2371F	TRW	4701-03-2371	2
R129 R165 R179 R201 R303 R306 R42 R44	RES,MF,1/8W,1%,249	RN55D-2490F	TRW	4701-03-2490	8
R148 R149 R164 R174 R270 R30 R34 R371 R65	RES,MF,1/8W,1%,2.49K	RN55D-2491F	TRW	4701-03-2491	9
R185 R196 R333 R345	RES,MF,1/8W,1%,24.9K	RN55D-2492F	TRW	4701-03-2492	4
R246T	RES,MF,1/8W,1%,27.4	RN55D-27R4F	TRW	4701-03-2749	1
R120	RES,MF,1/8W,1%,2.87K	RN55D-2871F	TRW	4701-03-2871	1
R154 R212 R244 R248	RES,MF,1/8W,1%,3.01K	RN55D-3011F	TRW	4701-03-3011	6

WAVETEK PARTS LIST — TITLE: PCA,MAINBOARD — ASSEMBLY NO. 1100-00-0872 — REV F

REFERENCE DESIGNATORS	PART DESCRIPTION
R241 R243 R254 R276 R9	
R160 R225	RES,MF,1/8W,1%,49.9K
R202	RES,MF,1/8W,1%,511
R249T R265	RES,MF,1/8W,1%,51.1
R189 R191	RES,MF,1/8W,1%,523
R81 R86	RES,MF,1/8W,1%,54.9
R147	RES,MF,1/8W,1%,576
R348	RES,MF,1/8W,1%,5.76K
R269 R82 R85	RES,MF,1/8W,1%,604
R150	RES,MF,1/8W,1%,619
R315 R50	RES,MF,1/8W,1%,6.19K
R211 R222	RES,MF,1/8W,1%,61.9
R264	RES,MF,1/8W,1%,68.1
R259 R62	RES,MF,1/8W,1%,6.98K
R121 R173 R219 R220 R336T R64 R78	RES,MF,1/8W,1%,750
R128 R130 R135 R136 R167 R169	RES,MF,1/8W,1%,7.5K

WAVETEK PARTS LIST — TITLE: PCA,MAINBOARD

REFERENCE DESIGNATORS	PART DESCRIPTION	ORIG-MFGR-PART-NO	MFGR	WAVETEK NO.	QTY/PT
R38 R48					
R271	RES,MF,1/8W,1%,30.1K	RN55D-3012F	TRW	4701-03-3012	1
R122 R217 R70 R75 R83 R84	RES,MF,1/8W,1%,316	RN55D-3160F	TRW	4701-03-3160	6
R260	RES,MF,1/8W,1%,33.2K	RN55D-3322F	TRW	4701-03-3322	1
R101 R102 R111 R118 R126 R127 R133 R134 R137 R138 R263 R275 R293 R322 R390 R71 R72 R73 R76 R80 R96 R97	RES,MF,1/8W,1%,33.2	RN55D-33R2F	TRW	4701-03-3329	22
R140 R141 R88T R89T	RES,MF,1/8W,1%,3.65K	RN55D-3651F	TRW	4701-03-3651	4
R325 R329 R95	RES,MF,1/8W,1%,392	RN55D-3920F	TRW	4701-03-3920	3
R245 R247	RES,MF,1/8W,1%,42.2	RN55D-42R2F	TRW	4701-03-4229	2
R91 R99	RES,MF,1/8W,1%,464	RN55D-4640F	TRW	4701-03-4640	2
R35	RES,MF,1/8W,1%,4.64K	RN55D-4641F	TRW	4701-03-4641	1
R146 R346	RES,MF,1.8W,1%,46.4	RN55D-46R4F	TRW	4701-03-4649	2
R28	RES,MF,1/8W,1%,4.75K	RN55D-4751F	TRW	4701-03-4751	1
R299 R63	RES,MF,1/8,1%,499	RN55D-4990F	TRW	4701-03-4990	2
R12 R15 R162 R176 R177 R178 R19 R20	RES,MF,1/8W,1%,4.99K	RN55D-4991F	TRW	4701-03-4991	13

WAVETEK PARTS LIST — TITLE: PCA,MAINBOARD — ASSEMBLY NO. 1100-00-0872 — REV F

REFERENCE DESIGNATORS	PART DESCRIPTION
R119 R221	RES,MF,1/8W,1%,7.87
R117	RES,MF,1/8W,1%,825
R151	RES,MF,1/8W,1%,82.5
R200T	RES,MF,1/8W,1%,9.09
R280	RES,MF,1/8W,1%,90.9
R107	RES,MF,1/8W,1%,976
R6	RES,MF,1/4W,1%,1M
R37 R46	RES,MF,1/4W,1%,499K
R207	RES,MF,1/4W,1%,698K
R108 R109	RES,MF,1/2W,1%,121
R311 R313	RES,MF,1W,1%,100
	RES,MF,MIXED SET
R58	RES,MF,1/8W,1%,10K PART OF 4789-00-004 QTY(1)
R59	RES,MF,1/8W,1%,100K PART OF 4789-00-004 QTY(1)

WAVETEK PARTS LIST — TITLE: PCA,MAINBOARD

NOTE: UNLESS OTHERWISE SPECIFIED

DIENOP GRAPHICS/ACCUPRESS RECORDER NO. A-3804

www.valuetronics.com

THIS DOCUMENT CONTAINS PROPRIETARY INFORMATION AND DESIGN RIGHTS BELONGING TO WAVETEK AND MAY NOT BE REPRODUCED FOR ANY REASON EXCEPT CALIBRATION, OPERATION, AND MAINTENANCE WITHOUT WRITTEN AUTHORIZATION.

NOTE: UNLESS OTHERWISE SPECIFIED

BISHOP GRAPHICS/ACCUPRESS
REORDER NO. A-5624

www.valuetronics.com

THIS DOCUMENT CONTAINS PROPRIETARY INFORMATION AND DESIGN RIGHTS BELONGING TO WAVETEK AND MAY NOT BE REPRODUCED FOR ANY REASON EXCEPT CALIBRATION, OPERATION, AND MAINTENANCE WITHOUT WRITTEN AUTHORIZATION.

TYPICAL HARDWARE STACK-UP

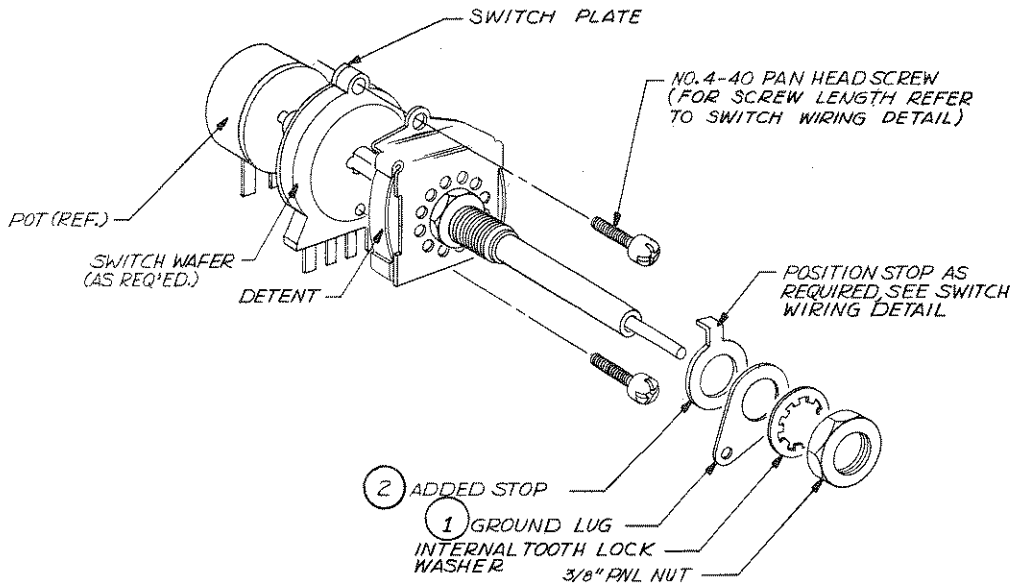

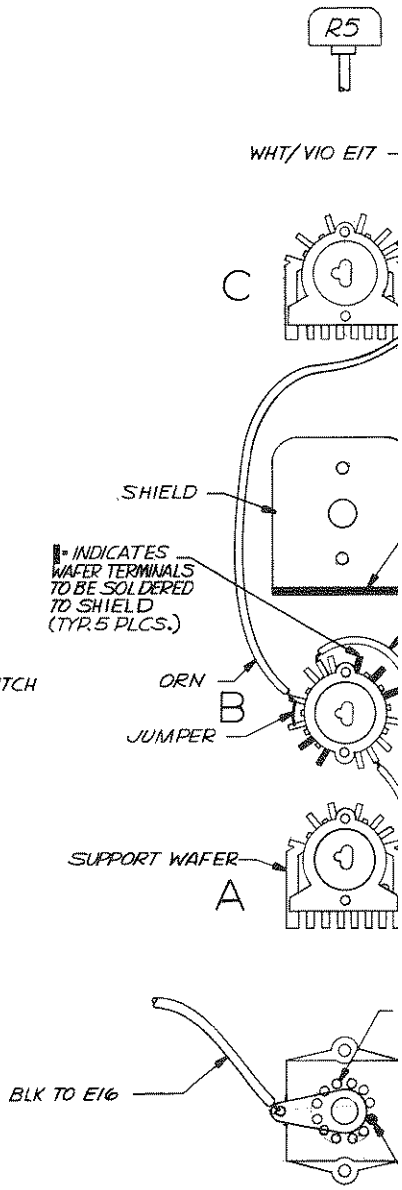

SW5
WIRING DETAI

WAFER A AND B # 4 SPACER
WAFER B AND C # 4 SPACER
NO. 4-40x2" P. WITH LOCK WASH AND NUT.
WAFER A & B 4-4 SCREW

1. ALL DETENTS SHOWN FROM FRONT VIEW IN FULL COUNTER CLOCKWISE POSITION.

NOTE: UNLESS OTHERWISE SPECIFIED

www.valuetronics.com

THIS DOCUMENT CONTAINS PROPRIETARY INFORMATION AND DESIGN RIGHTS BELONGING TO WAVETEK AND MAY NOT BE REPRODUCED FOR ANY REASON EXCEPT CALIBRATION, OPERATION, AND MAINTENANCE WITHOUT WRITTEN AUTHORIZATION.

NOTE: UNLESS OTHERWISE SPECIFIED

BISHOP GRAPHICS/ACCUPRESS
RECORDER NO. A-3384

www.valuetronics.com