R&S®ZN-Z86 | R&S®ZN-Z86X SWITCH MATRIX

Specifications

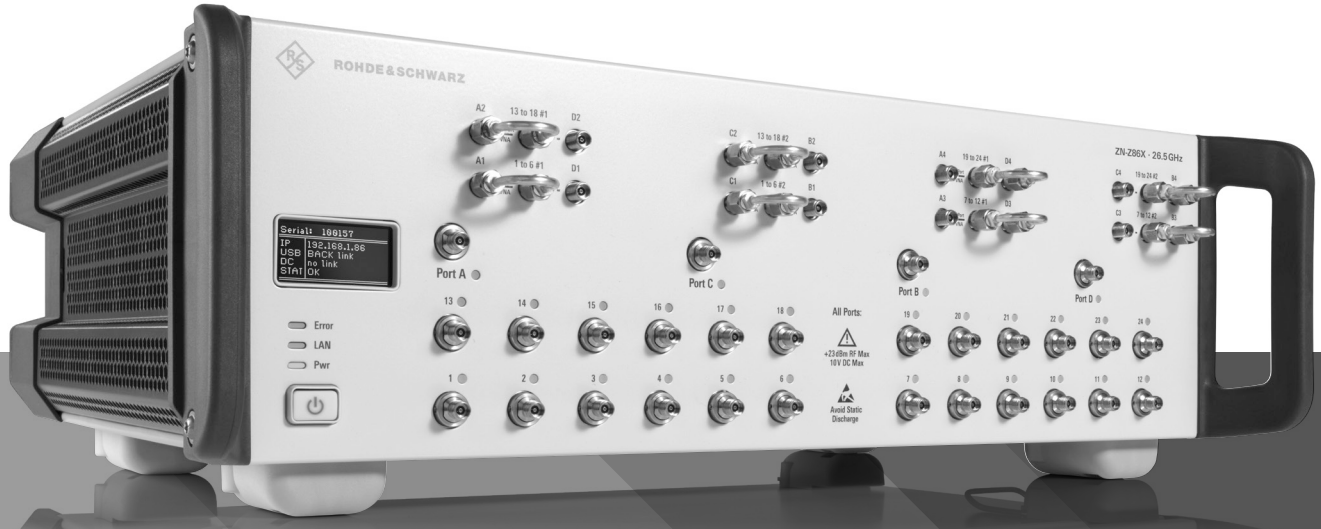

Specifications
Version 04.00

ROHDE&SCHWARZ
Make ideas real

CONTENTS

Definitions **3**

Switching configurations **4**

R&S®ZN-Z86 switch matrix 4

R&S®ZN-Z86X switch matrix 10

Specifications **12**

General features 12

R&S®ZN-Z86 performance data 12

R&S®ZN-Z86X performance data 13

Remote control 13

Switching times 13

General data 14

Mechanical extensions **15**

R&S®ZN-ZTBE mechanical matrix extension for the R&S®ZN-Z86 15

R&S®ZN-ZTXBE mechanical matrix extension for the R&S®ZN-Z86X 15

Ordering information **16**

Warranty and service **17**

Definitions

General
Product data applies under the following conditions:

- Three hours storage at ambient temperature followed by 30 minutes warm-up operation
- Specified environmental conditions met
- Recommended calibration interval adhered to
- All internal automatic adjustments performed, if applicable

Specifications with limits
Represent warranted product performance by means of a range of values for the specified parameter. These specifications are marked with limiting symbols such as <, ≤, >, ≥, ±, or descriptions such as maximum, limit of, minimum. Compliance is ensured by testing or is derived from the design. Test limits are narrowed by guard bands to take into account measurement uncertainties, drift and aging, if applicable.

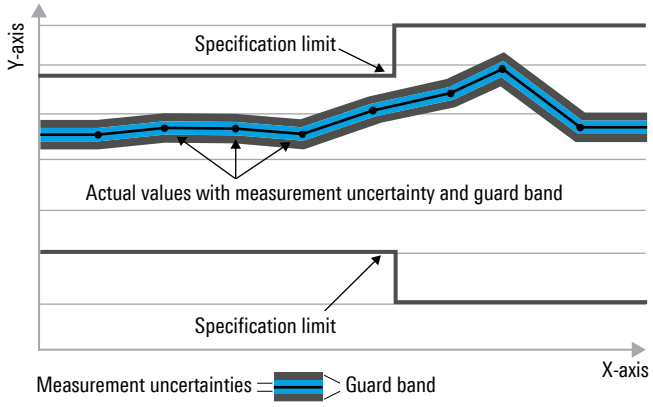

Non-traceable specifications with limits (n. trc.)
Represent product performance that is specified and tested as described under “Specifications with limits” above. However, product performance in this case cannot be warranted due to the lack of measuring equipment traceable to national metrology standards. In this case, measurements are referenced to standards used in the Rohde & Schwarz laboratories.

Specifications without limits
Represent warranted product performance for the specified parameter. These specifications are not specially marked and represent values with no or negligible deviations from the given value (e.g. dimensions or resolution of a setting parameter). Compliance is ensured by design.

Typical data (typ.)
Characterizes product performance by means of representative information for the given parameter. When marked with <, > or as a range, it represents the performance met by approximately 80 % of the instruments at production time. Otherwise, it represents the mean value.

Nominal values (nom.)
Characterize product performance by means of a representative value for the given parameter (e.g. nominal impedance). In contrast to typical data, a statistical evaluation does not take place and the parameter is not tested during production.

Measured values (meas.)
Characterize expected product performance by means of measurement results gained from individual samples.

Uncertainties
Represent limits of measurement uncertainty for a given measurand. Uncertainty is defined with a coverage factor of 2 and has been calculated in line with the rules of the Guide to the Expression of Uncertainty in Measurement (GUM), taking into account environmental conditions, aging, wear and tear.

Device settings and GUI parameters are designated with the format “parameter: value”.

Non-traceable specifications with limits, typical data as well as nominal and measured values are not warranted by Rohde & Schwarz.

In line with the 3GPP standard, chip rates are specified in million chips per second (Mcps), whereas bit rates and symbol rates are specified in billion bit per second (Gbps), million bit per second (Mbps), thousand bit per second (kbps), million symbols per second (Msps) or thousand symbols per second (ksps), and sample rates are specified in million samples per second (Msample/s). Gbps, Mcps, Mbps, Msps, kbps, ksps and Msample/s are not SI units.

Switching configurations

R&S®ZN-Z86 switch matrix

2 × 6 ports

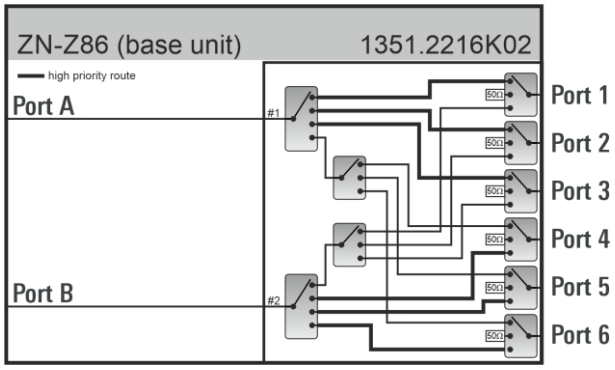

R&S®ZN-Z86 base unit

2 × 12 ports

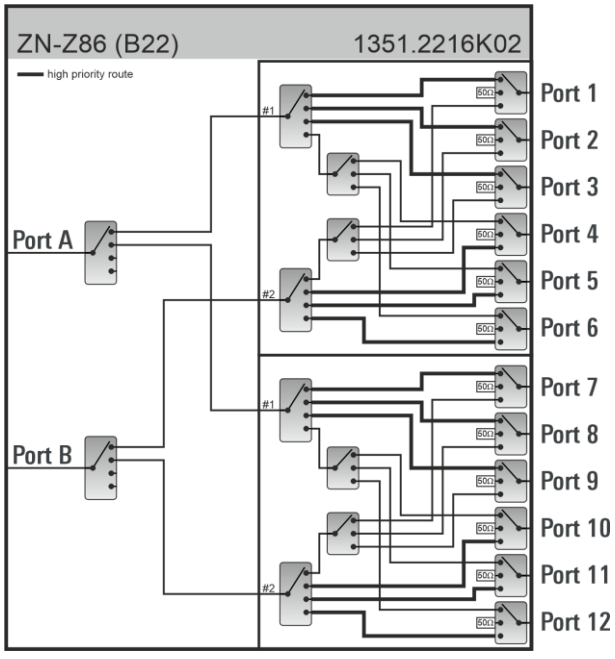

R&S®ZN-Z86 base unit with
R&S®ZN-Z86-B22 option

2 × 18 ports

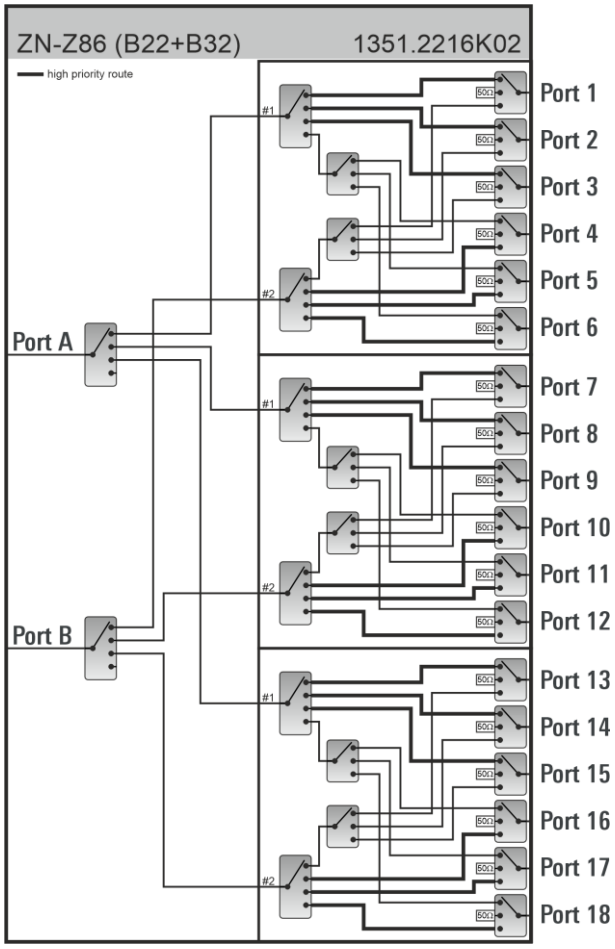

R&S®ZN-Z86 base unit with
R&S®ZN-Z86-B22 and R&S®ZN-Z86-B32 options

2 × 24 ports

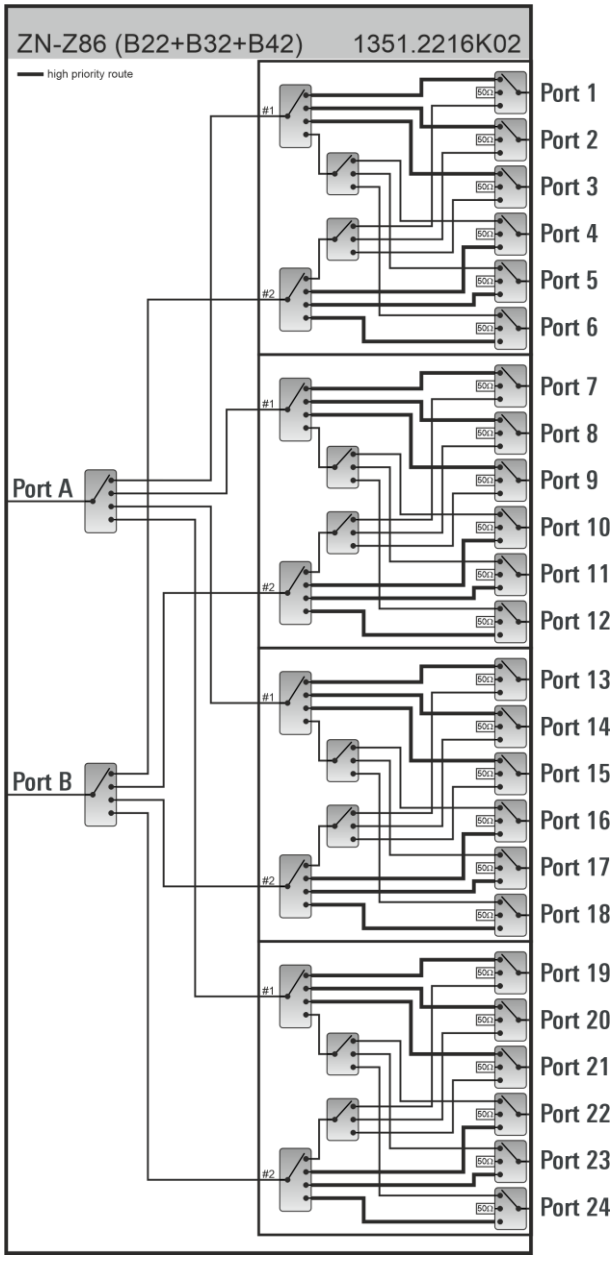

R&S®ZN-Z86 base unit with
R&S®ZN-Z86-B22, R&S®ZN-Z86-B32 and R&S®ZN-Z86-B42 options

4 × 12 ports

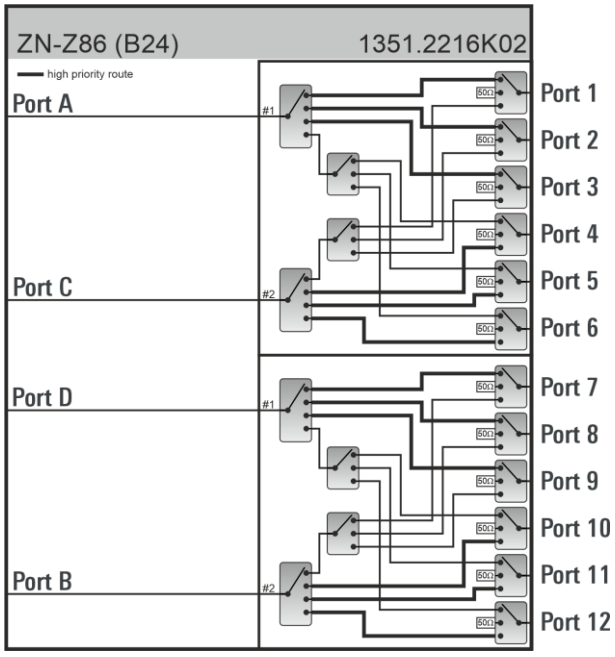

R&S®ZN-Z86 base unit with
R&S®ZN-Z86-B24 option

4 × 18 ports

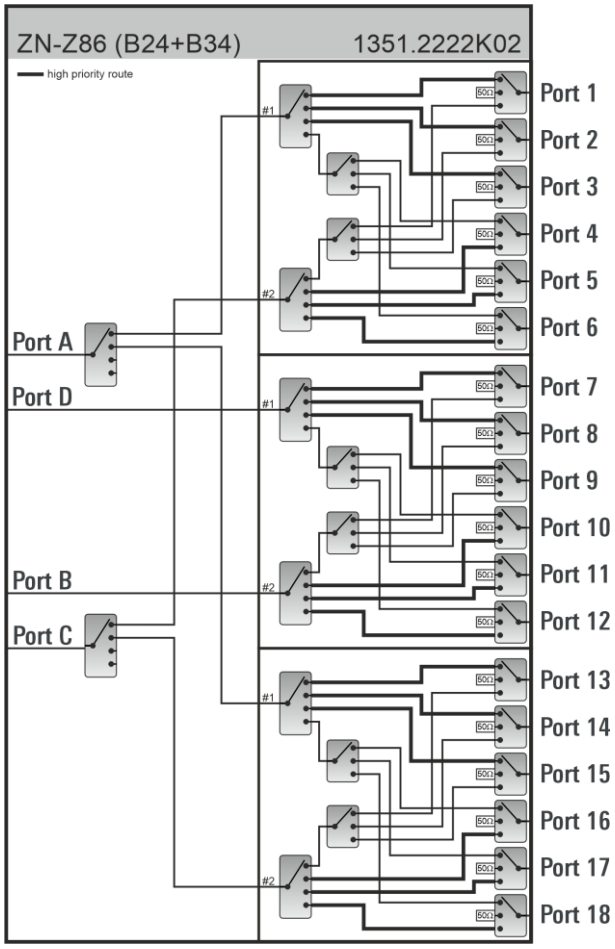

R&S®ZN-Z86 base unit with
R&S®ZN-Z86-B24 and R&S®ZN-Z86-B34 options

4 × 24 ports

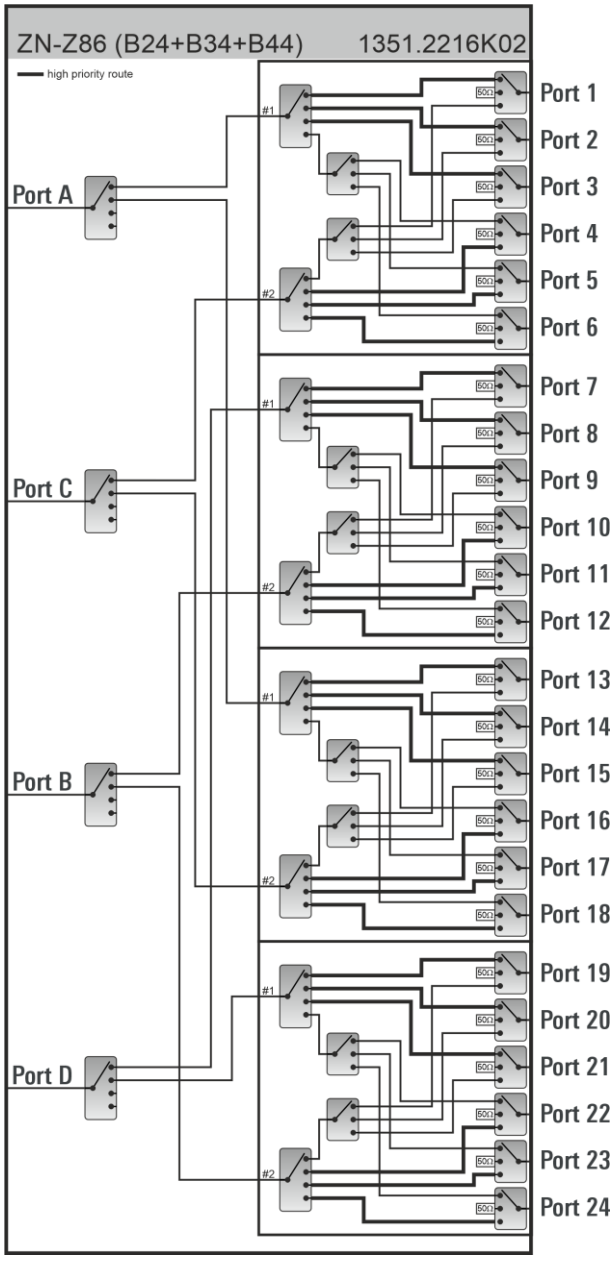

R&S®ZN-Z86 base unit with
R&S®ZN-Z86-B24, R&S®ZN-Z86-B34 and R&S®ZN-Z86-B44 options

R&S®ZN-Z86X switch matrix

2 or 4 × 12 ports

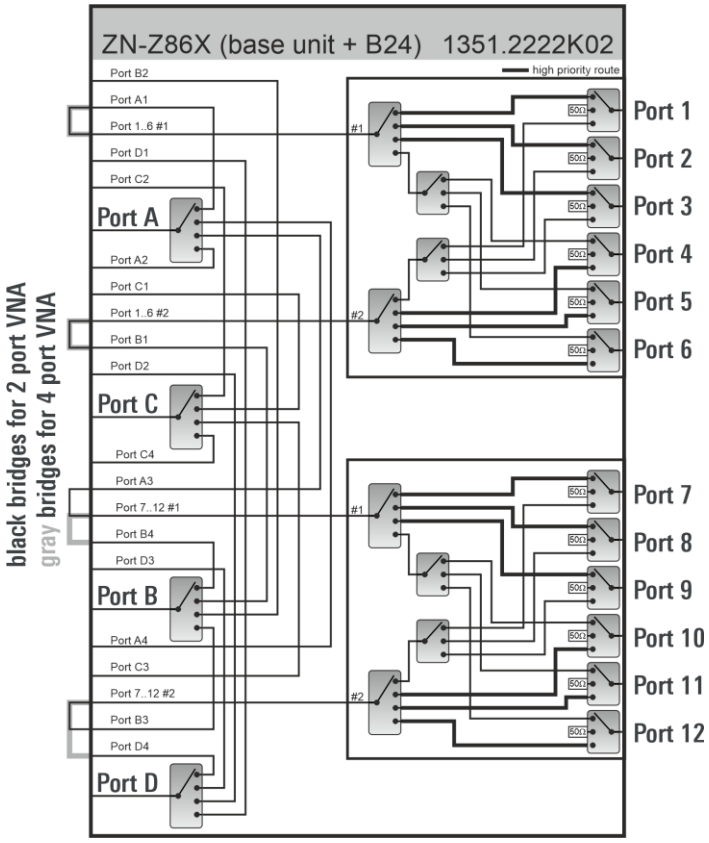

R&S®ZN-Z86X base unit with
R&S®ZNZ86X-B24 option

2 or 4 × 24 ports

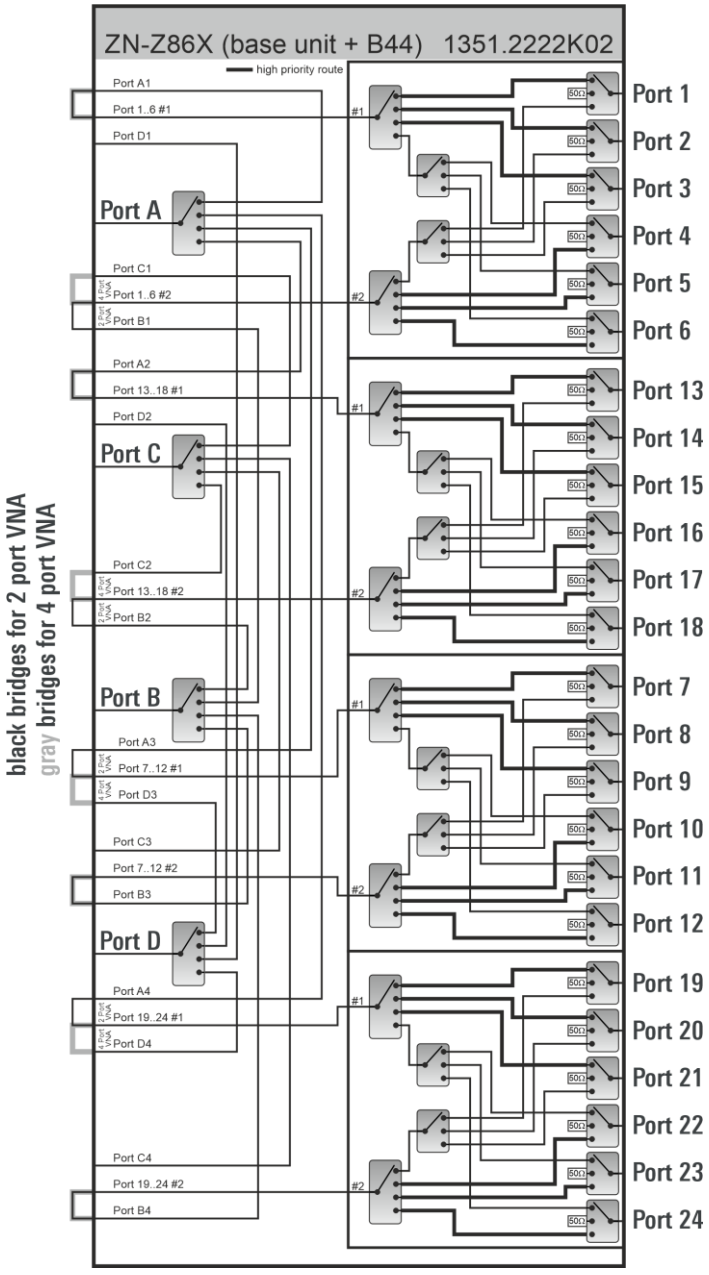

R&S®ZN-Z86X base unit with
R&S®ZNZ86X-B44 option

Specifications

General features

Supported vector network analyzers (VNA)		R&S®ZNA, R&S®ZNB, R&S®ZNBT
Frequency range		300 kHz to 26.5 GHz
Impedance		50 Ω
R&S®ZN-Z86		
Number of VNA ports	R&S®ZN-Z86	2 or 4
Test port connector type		2.92 mm, female
Number of test ports		6, 12, 18, 24
Switching configuration	R&S®ZN-Z86 base unit	full crossbar
	R&S®ZN-Z86 base unit with R&S®ZN-Z86-B22, R&S®ZN-Z86-B32, R&S®ZN-Z86-B42 options	full crossbar
	R&S®ZN-Z86 base unit with R&S®ZN-Z86-B24, R&S®ZN-Z86-B34, R&S®ZN-Z86-B44 options	• VNA ports A and C to test ports 1 to 6 and to test ports 13 to 18, full crossbar • VNA ports B and D to test ports 7 to 12 and to test ports 19 to 24, full crossbar
R&S®ZN-Z86X		
Number of VNA ports	R&S®ZN-Z86X, all models	4
Test port connector type		2.92 mm, female
Number of test ports		12 or 24
Switching configuration	R&S®ZN-Z86X base unit with R&S®ZNZ86X-B24 option, 2-port VNA	full crossbar
	R&S®ZN-Z86X base unit with R&S®ZNZ86X-B24 option, 4-port VNA	• VNA ports A and C to test ports 1 to 6, full crossbar • VNA ports B and D to test ports 7 to 12, full crossbar
	R&S®ZN-Z86X base unit with R&S®ZNZ86X-B44 option, 2-port VNA	full crossbar
	R&S®ZN-Z86X base unit with R&S®ZNZ86X-B44 option, 4-port VNA	• VNA ports A and C to test ports 1 to 6 and to test ports 13 to 18, full crossbar • VNA ports B and D to test ports 7 to 12 and to test ports 19 to 24, full crossbar
Damage level	for frequencies ≥ 100 MHz	+23 dBm
	for frequencies < 100 MHz	+11 dBm
Damage DC voltage		10 V

R&S®ZN-Z86 performance data

		300 kHz to 10 MHz (in dB)	**10 MHz to 8 GHz (in dB)**	**8 GHz to 18 GHz (in dB)**	**18 GHz to 26.5 GHz (in dB)**
Insertion loss	R&S®ZN-Z86-B22, R&S®ZN-Z86-B32, R&S®ZN-Z86-B42, R&S®ZN-Z86-B34, R&S®ZN-Z86-B44				
	any VNA port to any test port	< 9 (meas.)	< 9	< 13	< 18
Insertion loss (high priority path)	R&S®ZN-Z86-B22 (R&S®ZN-Z86-B32, R&S®ZN-Z86-B42)				
	VNA ports A and B to test ports 1 to 3 and to test ports 7 to 9	< 7 (meas.)	< 7	< 10	< 12
	VNA ports A and B to test ports 4 to 6 and to test ports 10 to 12	< 7 (meas.)	< 7	< 10	< 12
	VNA ports C and D to test ports 1 to 3 and to test ports 7 to 9	< 7 (meas.)	< 7	< 10	< 12
	VNA ports C and D to test ports 4 to 6 and to test ports 10 to 12	< 7 (meas.)	< 7	< 10	< 12

		300 kHz to 10 MHz (in dB)	10 MHz to 8 GHz (in dB)	8 GHz to 18 GHz (in dB)	18 GHz to 26.5 GHz (in dB)
Insertion loss	R&S®ZN-Z86 base unit with R&S®ZN-Z86-B24 option				
	VNA ports A and B to test ports 1 to 3 and to test ports 7 to 9	< 7 (meas.)	< 7	< 10	< 12
	VNA ports A and B to test ports 4 to 6 and to test ports 10 to 12	< 7 (meas.)	< 7	< 10	< 12
	VNA port C and D to test ports 1 to 3 and to test ports 7 to 9	< 7 (meas.)	< 7	< 10	< 12
	VNA port C and D to test ports 4 to 6 and to test ports10 to 12	< 7 (meas.)	< 7	< 10	< 12
Raw load port match	any selected test port (active)	> 10 (meas.)	> 10, 12 (typ.)	> 9, 11 (typ.)	> 6, 10 (typ.)
	any unselected test port (passive)	> 14 (meas.)	> 14, 16 (typ.)	> 11, 13 (typ.)	> 9, 11 (typ.)
Isolation	any unselected test port to any VNA port	> 70 (meas.)	> 70	> 70	> 70

R&S®ZN-Z86X performance data

		300 kHz to 10 MHz (in dB)	10 MHz to 8 GHz (in dB)	8 GHz to 18 GHz (in dB)	18 GHz to 26.5 GHz (in dB)
Insertion loss	R&S®ZN-Z86X base unit (12 ports)				
	any VNA port to any test port	< 9 (meas.)	< 9	< 13	< 18
	high priority path (3 ports of 6-port group)	< 7 (meas.)	< 7	< 10	< 12
	R&S®ZNZ86X-B44 (24 ports)				
	any VNA port to any test port	< 9 (meas.)	< 9	< 13	< 18
	high priority path (3 ports of 6-port group)	< 7 (meas.)	< 7	< 10	< 12
Raw load port match	any selected test port (active)	> 10 (meas.)	> 10, 12 (typ.)	> 8, 10 (typ.)	> 6, 10 (typ.)
	any unselected test port (passive)	> 14 (meas.)	> 14, 16 (typ.)	> 11, 13 (typ.)	> 9, 11 (typ.)
Isolation	any unselected test port to any VNA port	> 70 (meas.)	> 70	> 70	> 70

Remote control

USB		universal serial bus socket, type B
LAN		10/100BASE-T, RJ-45
Direct control	R&S®ZNB-B12 device control option required for R&S®ZNB; R&S®ZNBT-B12 device control option required for R&S®ZNBT	direct connection to internal VNA measurement bus

Switching times

USB	with software handshake turned on	typ. 4 ms (nom.)
LAN	with software handshake turned on	typ. 5 ms (nom.)
Direct control		< 200 µs (nom.)
BNC trigger		< 10 µs

General data

Temperature loading	operating temperature range	+18 °C to +28 °C
	permissible temperature range	+5 °C to +40 °C
	storage temperature range	–20 °C to +60 °C
		in line with IEC 60068-2-1 and IEC 60068-2-2
Damp heat		+40 °C at 85 % relative humidity, in line with IEC 60068-2-30
Mechanical resistance		
Vibration	sinusoidal	5 Hz to 150 Hz, in line with IEC 60068-2-6
	random	8 Hz to 500 Hz, in line with IEC 60068-2-64
Shock		40 g shock spectrum, in line with IEC 60068-2-27, MIL-STD-810
Power rating		
Power supply	AC input voltage range	100 V to 240 V (AC) ± 10 %
	AC supply frequency	50 Hz to 60 Hz/400 Hz ± 5 %
	maximum input current	< 1.7 A
	safety	safety class I to VDE 411
Power consumption		≤ 130 VA
Product conformity		
Electromagnetic compatibility	RF emission	in line with CISPR 11/EN 55011 group 1, class B (for a shielded test setup)
	other emissions	in line with IEC/EN 61326-1, class B
	immunity	industrial environment (excluding operating frequency)
Electrical safety		in line with IEC 61010-1 and EN 61010-1, C22.2 No. 61010-1 and UL61010-1
International safety approvals		VDE, $_{C}$CSA$_{US}$, CE
EU legislation	for details, see user documentation	EU: in line with Data Act – Regulation (EU) 2023/2854
Calibration interval		1 year
Dimensions (W × H × D)	R&S®ZN-Z86	459.2 mm × 104.7 mm × 352.2 mm (18.08 in × 4.12 in × 13.87 in)
	R&S®ZN-Z86X	459.2 mm × 149.2 mm × 352.2 mm (18.08 in × 5.87 in × 13.87 in)
Weight	R&S®ZN-Z86	4 kg to 6 kg (8.8 lb to 13.2 lb)
	R&S®ZN-Z86X	5 kg to 7 kg (11 lb to 15.4 lb)

Mechanical extensions

R&S®ZN-ZTBE mechanical matrix extension for the R&S®ZN-Z86

To place the R&S®ZNA or R&S®ZNBT vector network analyzer on top of the R&S®ZN-Z86 switch matrix the R&S®ZN-ZTBE mechanical matrix extension is used.

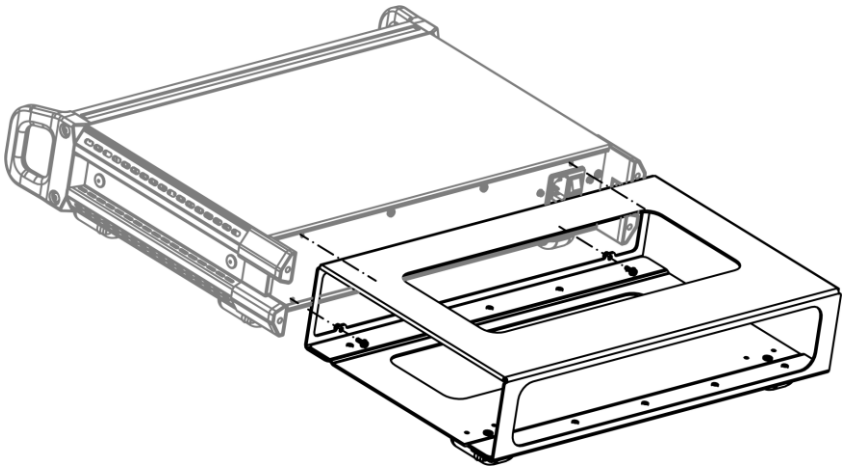

R&S®ZN-ZTBE mechanical matrix extension for the R&S®ZN-Z86

Maximum load	for fully equipped R&S®ZNBT	45 kg
Dimensions	W × H × D	410 mm × 103 mm × 255 mm (16.1 in × 4.1 in × 10.0 in)
Weight		400 g (0.9 lb)

R&S®ZN-ZTXBE mechanical matrix extension for the R&S®ZN-Z86X

To place the R&S®ZNA or R&S®ZNBT vector network analyzer on top of the R&S®ZN-Z86X switch matrix the R&S®ZN-ZTXBE mechanical matrix extension is used.

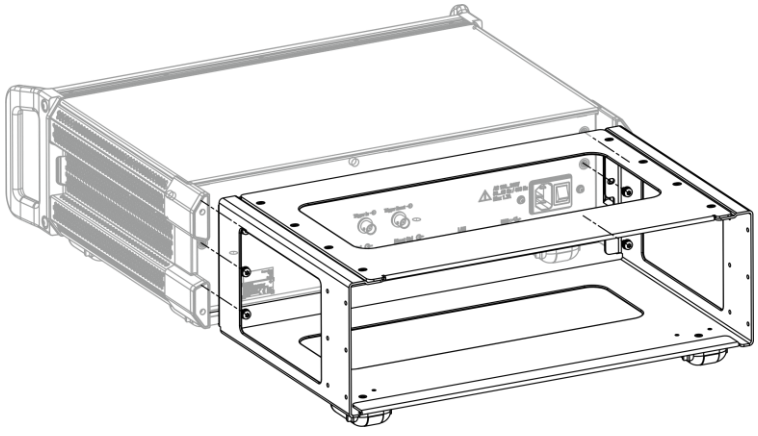

R&S®ZN-ZTXBE mechanical matrix extension for the R&S®ZN-Z86X

Maximum load	for fully equipped R&S®ZNBT	45 kg
Dimensions	W × H × D	410 mm × 150 mm × 257 mm (16.1 in × 5.9 in × 10.1 in)
Weight		600 g (1.3 lb)

Ordering information

Designation	Type	Order No.
Base units (including accessories supplied such as power cable, manual)		
Switch matrix, 26.5 GHz, 2 VNA ports to 6 test ports	R&S®ZN-Z86	1351.2216.02
Switch matrix, 26.5 GHz, with additional RF access	R&S®ZN-Z86X	1351.2222.02
Options for R&S®ZN-Z86 (prerequisite: R&S®ZN-Z86 base unit)		
Additional test ports 7 to 12, 2 VNA ports to 12 test ports	R&S®ZN-Z86-B22	1351.2900.22
Additional test ports 13 to 18, 2 VNA ports to 18 test ports [1]	R&S®ZN-Z86-B32	1351.2900.32
Additional test ports 19 to 24, 2 VNA ports to 24 test ports [2]	R&S®ZN-Z86-B42	1351.2900.42
Additional test ports 7 to 12, 4 VNA ports to 12 test ports	R&S®ZN-Z86-B24	1351.2900.24
Additional test ports 13 to 18, 4 VNA ports to 18 test ports [3]	R&S®ZN-Z86-B34	1351.2900.34
Additional test ports 19 to 24, 4 VNA ports to 24 test ports [4]	R&S®ZN-Z86-B44	1351.2900.44
Options for R&S®ZN-Z86X (prerequisite: R&S®ZN-Z86X base unit)		
Additional test ports 1 to 12, 2 or 4 VNA ports	R&S®ZNZ86X-B24	1351.2222.24
Additional test ports 1 to 24, 2 or 4 VNA ports	R&S®ZNZ86X-B44	1351.2222.44
RF cable sets		
Semi-rigid cable set for R&S®ZNA, 2.92 mm (f) to 2.92 mm (m), 2 or 4 R&S®ZNA ports to R&S®ZN-Z86, benchtop operation	R&S®ZN-ZA26	1328.8905.02
Semi-rigid cable set for R&S®ZNA, 2.92 mm (f) to 2.92 mm (m), 2 or 4 R&S®ZNA ports to R&S®ZN-Z86X, benchtop operation	R&S®ZN-ZA26	1328.8905.03
Semi-rigid cable set for R&S®ZNB, 2.92 mm (f) to 2.92 mm (m), 2 or 4 R&S®ZNB ports to R&S®ZN-Z86, benchtop operation	R&S®ZN-ZB26	1328.8911.02
Semi-rigid cable set for R&S®ZNB, 2.92 mm (f) to 2.92 mm (m), 2 or 4 R&S®ZNB ports to R&S®ZN-Z86X, benchtop operation	R&S®ZN-ZB26	1328.8911.03
Semi-rigid cable set for R&S®ZNB, 2.92 mm (f) to 2.92 mm (m), 4 R&S®ZNB ports to 2 units of R&S®ZN-Z86, benchtop operation	R&S®ZN-ZB26	1328.8911.05
Semi-rigid cable set for R&S®ZNBT, 2.92 mm (f) to 2.92 mm (m), R&S®ZNBT port 1/2/3/4 to R&S®ZN-Z86	R&S®ZN-ZT26	1328.8928.02
Semi-rigid cable set for R&S®ZNBT, 2.92 mm (f) to 2.92 mm (m), R&S®ZNBT port 1/2/3/4 to R&S®ZN-Z86X	R&S®ZN-ZT26	1328.8928.03
Semi-rigid cable set for R&S®ZNBT, 2.92 mm (f) to 2.92 mm (m), R&S®ZNBT port 1/2/3/4/5/6/7/8 to R&S®ZN-Z86X	R&S®ZN-ZT26	1328.8928.04
Control cable		
Direct control cable	R&S®ZN-B121	1323.9290.00
Mechanical extensions for usage with R&S®ZNA or R&S®ZNBT vector network analyzer		
Mechanical matrix extension, 2 HU, for R&S®ZN-Z86, benchtop operation	R&S®ZN-ZTBE	1351.3906.02
Mechanical matrix extension, 3 HU, for R&S®ZN-Z86X, benchtop operation	R&S®ZN-ZTXBE	1351.3906.03
Rack adapter		
19" rack adapter for R&S®ZN-Z86	R&S®ZZA-KNP21	1177.8803.00
19" rack adapter for R&S®ZN-Z86X	R&S®ZZA-KNP31	1177.8810.00
Tools		
Torque wrench, SMA/PC 3.5/PC 2.92, 90 Ncm	R&S®ZN-ZTW	1328.8534.35
8 mm wrench extension for close connectors	R&S®SMA-WRENCH	1528.1590.02
Documentation		
Documentation of calibration values	R&S®DCV-2	0240.2193.22
Documentation of calibration values, printout	R&S®DCV-ZP	1173.6506.02

[1] Requires R&S®ZN-Z86-B22.
[2] Requires R&S®ZN-Z86-B32.
[3] Requires R&S®ZN-Z86-B24.
[4] Requires R&S®ZN-Z86-B34.

Warranty and service

Warranty		
Base unit		1 year
All other items		1 year
Service options		
	Service plans	**On demand**
Calibration	up to five years [5]	pay per calibration
Warranty and repair	up to five years [5]	standard price repair
Contact your Rohde & Schwarz sales office for further details.		

[5] For extended periods, contact your Rohde & Schwarz sales office.

Service at Rohde&Schwarz
You're in great hands

- ► Worldwide
- ► Local and personalized
- ► Customized and flexible
- ► Uncompromising quality
- ► Long-term dependability

Rohde&Schwarz

The Rohde&Schwarz technology group is among the trailblazers when it comes to paving the way for a safer and connected world with its leading solutions in test&measurement, technology systems and networks&cybersecurity. Founded more than 90 years ago, the group is a reliable partner for industry and government customers around the globe. The independent company is headquartered in Munich, Germany and has an extensive sales and service network with locations in more than 70 countries.

www.rohde-schwarz.com

Sustainable product design

- ▶ Environmental compatibility and eco-footprint
- ▶ Energy efficiency and low emissions
- ▶ Longevity and optimized total cost of ownership

Certified Quality Management
ISO 9001

Certified Environmental Management
ISO 14001

More certificates of Rohde&Schwarz

Rohde&Schwarz training

www.training.rohde-schwarz.com

Rohde&Schwarz customer support

www.rohde-schwarz.com/support

R&S® is a registered trademark of Rohde&Schwarz GmbH&Co. KG
Trade names are trademarks of the owners
PD 3683.8844.22 | Version 04.00 | December 2025 (ch)
R&S®ZN-Z86 | R&S®ZN-Z86X Switch Matrix
Data without tolerance limits is not binding | Subject to change
© 2022 - 2025 Rohde&Schwarz | 81671 Munich, Germany