Pomona®

Model 4723
Minigrabber® With Banana Jack

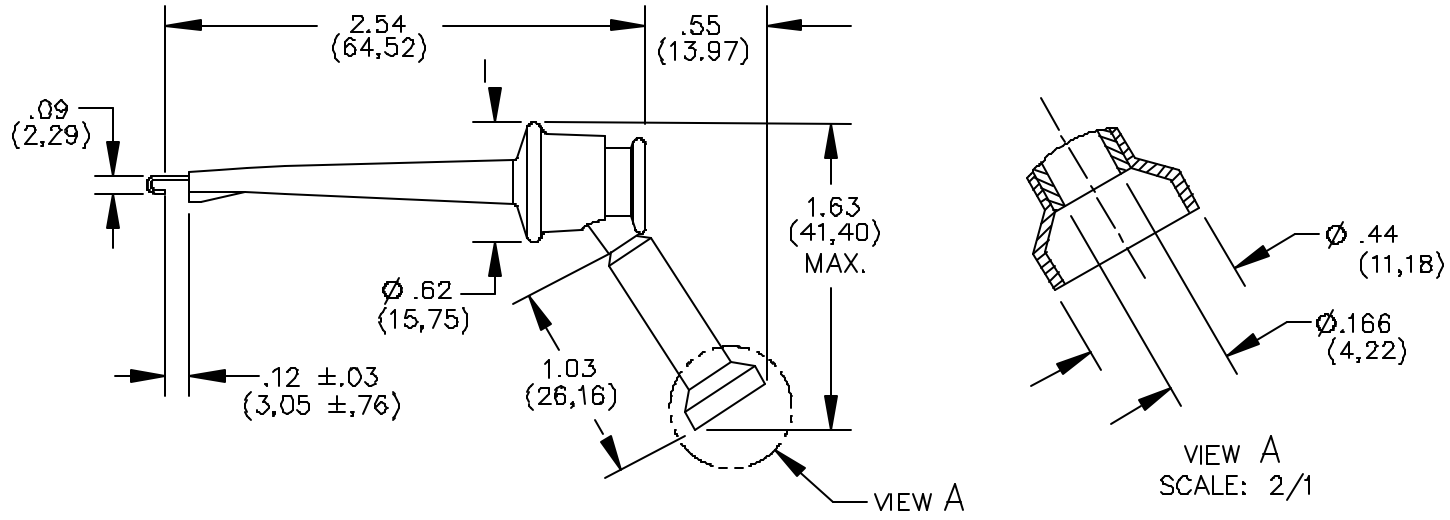

FEATURES:

- This Minigrabber test clip has a standard banana jack built right into the plunger.
- Excellent for attaching the Grabber test clip directly to the end of a banana plug patch cord.

MATERIALS:

Contact: Beryllium Copper per QQ-C-533, Alloy 165, ¼ HM.
Spring Stainless steel #302
Banana Jack: Brass per QQ-B-626, Alloy 360, ½ Hard.
Finish:
Contact: Gold plated per MIL-G-45204, Type I, Class 00
Banana Jack: Nickel plated per QQ-N-290, Class 1, 200/300 microinches.
Insulation:
Glass filled Nylon.
Marking: "POMONA ELECTRONICS, CALIF." "4723" "MINIGRABBER®".

RATINGS:

Operating Temperature: +102°C. (+216°F.) Max.
Operating Voltage: Hand-held testing: 30VAC/60VDC Max.
Current: 5 Amperes

ORDERING INFORMATION: Model 4723-*
*=Color, -0 Black, -2 Red, -1 Brown, -3 Orange, -4 Yellow, -5 Green, -6 Blue, -7 Violet, -8 Gray, -9 White
Ordering Example: 4723-2 Adapter Color is Red.

All dimensions are in inches. Tolerances (except noted): .xx = ±.02" (,51 mm), .xxx = ± .005" (,127 mm).
All specifications are to the latest revisions. Specifications are subject to change without notice.
Registered trademarks are the property of their respective companies. Made in USA

Sales: 800-490-2361 Fax: 888-403-3360
Technical Assistance: 800-241-2060

Pomona*ACCESS* **90603** (800) 444-6785 or (425) 446-6010
More drawings available at www.pomonaelectronics.com

www.valuetronics.com