# Pomona®

# Model 3782 Minigrabber® Test Clip To Stacking Banana Plug

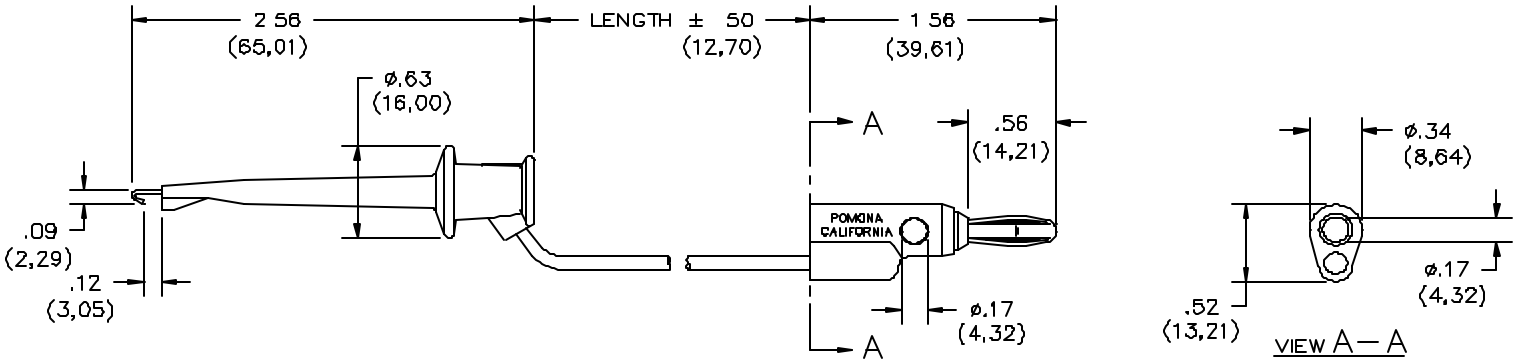


**FEATURES:**

- Provides a Minigrabber output from a Banana Jack.
- Banana plug is capable of vertical and cross stacking.
- Mates to Model 1581 or any standard Banana Jack.

**MATERIALS:**

Conn: 1st End - Minigrabber®

Material: Contact – Beryllium Copper
Spring – Stainless Steel
Finish: Contact – Gold Plated
Insulation: Glass filled nylon. Color matches color of wire.
Marking: "POMONA ELECTRONICS" "MINIGRABBER®"
Wire: 20 AWG , stranding 41 x 36 t.c., PVC insulated 2.21 (.087) O.D.
Color: See Ordering Information Marking: "POMONA 3782-*"

Conn: 2nd End – Stacking Banana Plug

Material: Spring – Beryllium Copper
Plug Body – Brass
Finish: Nickel Plated
Insulation: Polypropylene molded to plug body and wire. Color matches color of wire.

**RATINGS:**

Operating Temperature: +55ºC. (+131ºF.) Max.
Operating Voltage: Hand-held testing: 30VAC/60VDC Max.
Hands free testing in controlled voltage environments: 300 WVDC
Current: 5 Amperes Cont.

**ORDERING INFORMATION:** Model 3782-XX-*

XX = Cable Lengths, Standard Lengths: 12" (305), 24" (610), 36" (914), 48" (1219) & 60" (1524). Additional lengths can be quoted upon request.

*= Color, -0 Black, -1 Brown, -2 Red, -3 Orange, -4 Yellow, -5 Green, -6 Blue, -7 Violet, -8 Gray, -9 White

Ordering Example: 3782-60-2 Indicates 60" in length, Color is Red

All dimensions are in inches and metric. All specifications are to the latest revisions. Specifications are subject to change without notice.
Registered trademarks are the property of their respective companies. Made in USA



**Sales: 800-490-2361 Fax: 888-403-3360**
**Technical Assistance: 800-241-2060**

Pomona*ACCESS* **90582** (800) 444-6785 or (425) 446-6010
More drawings available at www.pomonaelectronics.com



www.valuetronics.com