4-8 GHz

Calibrated Variable Attenuators

- **Flat Frequency Response**
- **Accurate Calibration**
- **Direct Reading 0 to 20 dB and 0 to 40 dB**

Specifications

FREQUENCY RANGE GHz	MODEL	ATTENUATION dB	POWER INPUT AVG. W (max)	POWER INPUT PEAK kW (max)	VSWR (max) 4-8	INSERTION LOSS dB (max)	ACCURACY dB	WEIGHT (Max) oz	WEIGHT (Max) kg
4-8	793FM	0-20	10	5	1.25	0.5	±1.0	43.2	1.23
	794FM	0-30	10	5	1.25	0.5	±2.0	90.7	3.20
		30-40	10	5	1.25	0.5	±2.5		

Connectors are Type N stainless steel. All units are supplied with a female input connector and a male output connector.

Outline Drawings

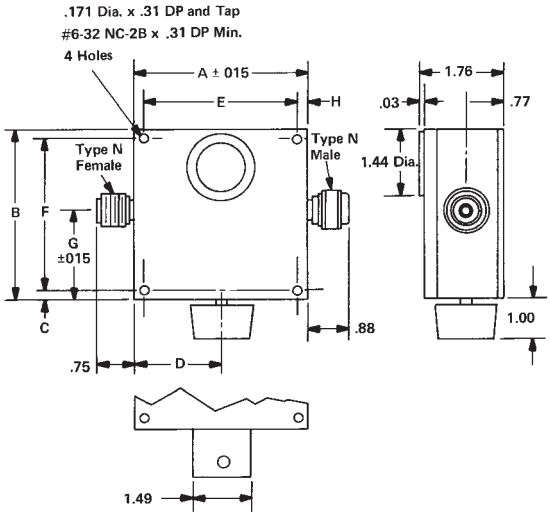

Model No.	A	B	C	D	E ±.015	F ±.015	G	H
793	4.83	4.29	.16	2.42	4.500	3.968	2.23	.16
794	8.51	5.24	.16	4.26	6.937	4.937	2.71	.79

All dimensions are max. unless otherwise specified.

narda
an L3 communications company

435 MORELAND ROAD • HAUPPAUGE, NY 11788
USA TEL: (1) 631 231-1700 • INT'L TEL: (1) 631 231-1390 • FAX (1) 631 231-1711
E-MAIL: nardaeast@L-3COM.com • www.nardamicrowave.com

www.valuetronics.com