Model 2001-TCSCAN
Scanner Card
Instruction Manual

Contains Operating and Servicing Information

KEITHLEY

WARRANTY

Keithley Instruments, Inc. warrants this product to be free from defects in material and workmanship for a period of 1 year from date of shipment.

Keithley Instruments, Inc. warrants the following items for 90 days from the date of shipment: probes, cables, rechargeable batteries, diskettes, and documentation.

During the warranty period, we will, at our option, either repair or replace any product that proves to be defective.

To exercise this warranty, write or call your local Keithley representative, or contact Keithley headquarters in Cleveland, Ohio. You will be given prompt assistance and return instructions. Send the product, transportation prepaid, to the indicated service facility. Repairs will be made and the product returned, transportation prepaid. Repaired or replaced products are warranted for the balance of the original warranty period, or at least 90 days.

LIMITATION OF WARRANTY

This warranty does not apply to defects resulting from product modification without Keithley's express written consent, or misuse of any product or part. This warranty also does not apply to fuses, software, non-rechargeable batteries, damage from battery leakage, or problems arising from normal wear or failure to follow instructions.

THIS WARRANTY IS IN LIEU OF ALL OTHER WARRANTIES, EXPRESSED OR IMPLIED, INCLUDING ANY IMPLIED WARRANTY OF MERCHANTABILITY OR FITNESS FOR A PARTICULAR USE. THE REMEDIES PROVIDED HEREIN ARE BUYER'S SOLE AND EXCLUSIVE REMEDIES.

NEITHER KEITHLEY INSTRUMENTS, INC. NOR ANY OF ITS EMPLOYEES SHALL BE LIABLE FOR ANY DIRECT, INDIRECT, SPECIAL, INCIDENTAL OR CONSEQUENTIAL DAMAGES ARISING OUT OF THE USE OF ITS INSTRUMENTS AND SOFTWARE EVEN IF KEITHLEY INSTRUMENTS, INC., HAS BEEN ADVISED IN ADVANCE OF THE POSSIBILITY OF SUCH DAMAGES. SUCH EXCLUDED DAMAGES SHALL INCLUDE, BUT ARE NOT LIMITED TO: COSTS OF REMOVAL AND INSTALLATION, LOSSES SUSTAINED AS THE RESULT OF INJURY TO ANY PERSON, OR DAMAGE TO PROPERTY.

KEITHLEY

Keithley Instruments, Inc. • 28775 Aurora Road • Cleveland, OH 44139 • 440-248-0400 • Fax: 440-248-6168 • http://www.keithley.com

CHINA: **Keithley Instruments China** • Yuan Chen Xin Building, Room 705 • 12 Yumin Road, Dewai, Madian • Beijing 100029 • 8610-62022886 • Fax: 8610-62022892
FRANCE: **Keithley Instruments SARL** • BP 60 • 3 Allée des Garays • 91122 Palaiseau Cédex • 33-1-60-11-51-55 • Fax: 33-1-60-11-77-26
GERMANY: **Keithley Instruments GmbH** • Landsberger Strasse 65 • D-82110 Germering, Munich • 49-89-8493070 • Fax: 49-89-84930759
GREAT BRITAIN: **Keithley Instruments, Ltd.** • The Minster • 58 Portman Road • Reading, Berkshire, England RG3 1EA • 44-1189-596469 • Fax: 44-1189-575666
ITALY: **Keithley Instruments SRL** • Viale S. Gimignano 38 • 20146 Milano • 39-2-48303008 • Fax: 39-2-48302274
NETHERLANDS: **Keithley Instruments BV** • Avelingen West 49 • 4202 MS Gorinchem • 31-(0)183-635333 • Fax: 31-(0)183-630821
SWITZERLAND: **Keithley Instruments SA** • Kriesbachstrasse 4 • 8600 Dübendorf • 41-1-8219444 • Fax: 41-1-8203081
TAIWAN: **Keithley Instruments Taiwan** • 1FL., 85 Po Ai Street • Hsinchu, Taiwan • 886-3-572-9077 • Fax: 886-3-572-9031

1/99

Model 2001-TCSCAN
Instruction Manual

©1993, Keithley Instruments, Inc.
All rights reserved.
Cleveland, Ohio, U.S.A.
Second Printing, January 1997
Document Number: 2001-TCSC-901-01 Rev. B

Manual Print History

The print history shown below lists the printing dates of all Revisions and Addenda created for this manual. The Revision Level letter increases alphabetically as the manual undergoes subsequent updates. Addenda, which are released between Revisions, contain important change information that the user should incorporate immediately into the manual. Addenda are numbered sequentially. When a new Revision is created, all Addenda associated with the previous Revision of the manual are incorporated into the new Revision of the manual. Each new Revision includes a revised copy of this print history page.

Revision A (Document Number 2001-TCSC-901-01)	March 1993
Addendum A (Document Number 2001-TCSC-901-02)	November 1995
Revision B (Document Number 2001-TCSC-901-01)	January 1997

All Keithley product names are trademarks or registered trademarks of Keithley Instruments, Inc.
Other brand and product names are trademarks or registered trademarks of their respective holders.

Safety Precautions

The following safety precautions should be observed before using this product and any associated instrumentation. Although some instruments and accessories would normally be used with non-hazardous voltages, there are situations where hazardous conditions may be present.

This product is intended for use by qualified personnel who recognize shock hazards and are familiar with the safety precautions required to avoid possible injury. Read the operating information carefully before using the product.

The types of product users are:

Responsible body is the individual or group responsible for the use and maintenance of equipment, for ensuring that the equipment is operated within its specifications and operating limits, and for ensuring that operators are adequately trained.

Operators use the product for its intended function. They must be trained in electrical safety procedures and proper use of the instrument. They must be protected from electric shock and contact with hazardous live circuits.

Maintenance personnel perform routine procedures on the product to keep it operating, for example, setting the line voltage or replacing consumable materials. Maintenance procedures are described in the manual. The procedures explicitly state if the operator may perform them. Otherwise, they should be performed only by service personnel.

Service personnel are trained to work on live circuits, and perform safe installations and repairs of products. Only properly trained service personnel may perform installation and service procedures.

Exercise extreme caution when a shock hazard is present. Lethal voltage may be present on cable connector jacks or test fixtures. The American National Standards Institute (ANSI) states that a shock hazard exists when voltage levels greater than 30V RMS, 42.4V peak, or 60VDC are present. **A good safety practice is to expect that hazardous voltage is present in any unknown circuit before measuring.**

Users of this product must be protected from electric shock at all times. The responsible body must ensure that users are prevented access and/or insulated from every connection point. In some cases, connections must be exposed to potential human contact. Product users in these circumstances must be trained to protect themselves from the risk of electric shock. If the circuit is capable of operating at or above 1000 volts, **no conductive part of the circuit may be exposed.**

As described in the International Electrotechnical Commission (IEC) Standard IEC 664, digital multimeter measuring circuits (e.g., Keithley Models 175A, 199, 2000, 2001, 2002, and 2010) are Installation Category II. All other instruments' signal terminals are Installation Category I and must not be connected to mains.

Do not connect switching cards directly to unlimited power circuits. They are intended to be used with impedance limited sources. NEVER connect switching cards directly to AC mains. When connecting sources to switching cards, install protective devices to limit fault current and voltage to the card.

Before operating an instrument, make sure the line cord is connected to a properly grounded power receptacle. Inspect the connecting cables, test leads, and jumpers for possible wear, cracks, or breaks before each use.

For maximum safety, do not touch the product, test cables, or any other instruments while power is applied to the circuit under test. ALWAYS remove power from the entire test system and discharge any capacitors before: connecting or disconnecting cables or jumpers, installing or removing switching cards, or making internal changes, such as installing or removing jumpers.

Do not touch any object that could provide a current path to the common side of the circuit under test or power line (earth) ground. Always make measurements with dry hands while standing on a dry, insulated surface capable of withstanding the voltage being measured.

The instrument and accessories must be used in accordance with its specifications and operating instructions or the safety of the equipment may be impaired.

Do not exceed the maximum signal levels of the instruments and accessories, as defined in the specifications and operating information, and as shown on the instrument or test fixture panels, or switching card.

When fuses are used in a product, replace with same type and rating for continued protection against fire hazard.

Chassis connections must only be used as shield connections for measuring circuits, NOT as safety earth ground connections.

If you are using a test fixture, keep the lid closed while power is applied to the device under test. Safe operation requires the use of a lid interlock.

If a ⏚ screw is present, connect it to safety earth ground using the wire recommended in the user documentation.

The ⚠ symbol on an instrument indicates that the user should refer to the operating instructions located in the manual.

The ⚡ symbol on an instrument shows that it can source or measure 1000 volts or more, including the combined effect of normal and common mode voltages. Use standard safety precautions to avoid personal contact with these voltages.

The **WARNING** heading in a manual explains dangers that might result in personal injury or death. Always read the associated information very carefully before performing the indicated procedure.

The **CAUTION** heading in a manual explains hazards that could damage the instrument. Such damage may invalidate the warranty.

Instrumentation and accessories shall not be connected to humans.

Before performing any maintenance, disconnect the line cord and all test cables.

To maintain protection from electric shock and fire, replacement components in mains circuits, including the power transformer, test leads, and input jacks, must be purchased from Keithley Instruments. Standard fuses, with applicable national safety approvals, may be used if the rating and type are the same. Other components that are not safety related may be purchased from other suppliers as long as they are equivalent to the original component. (Note that selected parts should be purchased only through Keithley Instruments to maintain accuracy and functionality of the product.) If you are unsure about the applicability of a replacement component, call a Keithley Instruments office for information.

To clean an instrument, use a damp cloth or mild, water based cleaner. Clean the exterior of the instrument only. Do not apply cleaner directly to the instrument or allow liquids to enter or spill on the instrument. Products that consist of a circuit board with no case or chassis (e.g., data acquisition board for installation into a computer) should never require cleaning if handled according to instructions. If the board becomes contaminated and operation is affected, the board should be returned to the factory for proper cleaning/servicing.

Rev. 2/99

2001-TCSCAN Thermocouple/General Purpose Scanner Card

Specifications

Thermocouple Accuracy

Thermocouple Type	Range	Default Resolution	Total Absolute Error[1] 1 Year 18°–28°C	Total Absolute Error[1] 1 Year 0°–18°C & 28°–50°C
J	–100 to 760°C	0.1°C	±0.65°C	±1.08°C
K	–100 to 1372°C	0.1°C	±0.70°C	±1.32°C
T	–100 to 400°C	0.1°C	±0.68°C	±1.22°C
E	–100 to 1000°C	0.1°C	±0.67°C	±1.11°C
R	0 to 1768°C	1.0°C	±1.31°C	±3.06°C
S	0 to 1768°C	1.0°C	±1.30°C	±3.02°C
B	350 to 1820°C	1.0°C	±1.65°C	±4.14°C

[1] When used with Model 2001 Multimeter.

Specifications apply to channels 2–6. Add 0.06°C for each adjacent channel away from channel 6.

Extended range (Types J, K, T, E): -200. 0°C to -100. 1°C add ±0.1°C.

Excluding thermocouple error.

Ordering Information

2001-TCSCAN	9 Channel Thermocouple/General Purpose Scanner
2001	High Performance 7½-Digit Multimeter
2001/MEM1	Base 2001 plus additional memory. Store up to 6000 readings
2001/MEM2	Base 2001 plus additional memory. Store up to 30000 readings
7401	Type K Thermocouple Wire Kit (100 ft)
8530	Centronics Printer Adapter
8681	Miniature Surface RTD Probe

Specifications subject to change without notice.

Specifications

GENERAL: 9 channels of 2-pole analog input, 1 cold junction sensor.

FUNCTIONS: DCV, ACV, 4-wire Ω, Thermocouple, 2-wire Ω, 4-wire RTD, 2-wire RTD, Frequency (can be mixed from channel to channel).

THERMOCOUPLE SCAN SPEED: 25 channels/second @0.1°C resolution; 43 channels/second @1°C resolution.

CAPABILITIES: Multiplex one of nine 2-pole or one of four 4-pole analog signals into Model 2001 DMM and/or any combination of 2- or 4-pole analog signals.

REFERENCE OUTPUT: +200µV/°C (+54.63mV at 0°C).

ALL INPUTS

Maximum Signal Levels²:

DC: 110V DC, <1A switched, 30VA maximum (resistive load).

AC: 125V AC rms or 175V AC peak, 1A switched, 62.5VA maximum (resistive load).

Contact Life: >10^5 operations at maximum signal level; >10^8 operations cold switching.

Contact Resistance²: <1Ω at end of contact life.

Actuation Time: 2.5ms maximum on/off.

Contact Potential³: <±500nV typical per contact, 1µV max.

Connector Type: Screw terminal, #22 AWG wire size (0.062 O.D.).

Isolation Between Any Two Terminals: >10^9, <75pF.

Common Mode Voltage: 350V peak between any terminal and earth.

Maximum Voltage Between Any Two Terminals: 110VDC, 125VAC RMS.

DIMENSIONS, WEIGHT: 21mm high × 72mm wide × 221mm deep (0.83 in × 2.83 in × 8.7 in). Net weight 283g (10 oz).

[2] Channels 5 and 10 maximum power = 0.25 VA maximum (factory installed 120Ω, 5%, 1/4W resistors. User may replace with jumper. See note in manual for complete instructions.)

[3] Channels 5 and 10 contact potential = ±1µV typical, 2µV max.

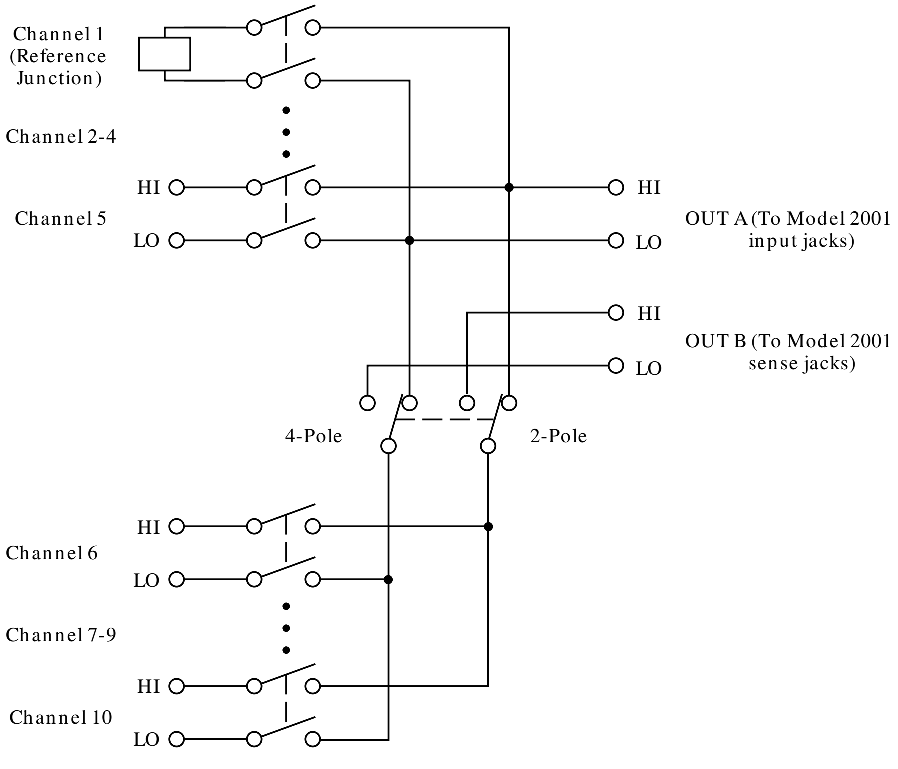

Table of Contents

1 General Information

1.1 Introduction 1-1
1.2 Features 1-1
1.3 Warranty information 1-1
1.4 Manual addenda 1-2
1.5 Safety symbols and terms 1-2
1.6 Specifications 1-2
1.7 Unpacking and inspection 1-2
1.7.1 Inspection for damage 1-2
1.7.2 Handling precautions 1-2
1.7.3 Shipment contents 1-2
1.7.4 Instruction manual 1-2
1.8 Repacking for shipment 1-3
1.9 Optional accessories 1-3

2 Card Connections and Installation

2.1 Introduction 2-1
2.2 Handling precautions 2-1
2.3 Connections 2-1
2.3.1 Card configuration 2-2
2.3.2 Card connectors 2-3
2.3.3 Wiring procedure 2-3
2.3.4 Output connections 2-4
2.3.5 Dressing leads 2-4
2.4 Typical connecting schemes 2-6
2.4.1 Thermocouple connections 2-6
2.4.2 Voltage connections 2-7
2.4.3 Resistance connections 2-8
2.5 Card installation and removal 2-10
2.5.1 Scanner card installation 2-10
2.5.2 Output connections to multimeter 2-12
2.5.3 Scanner card removal 2-12

3 Operation

3.1 Introduction 3-1
3.2 Signal limitations 3-2
3.3 Scanner card detection 3-2
3.3.1 Power-up detection 3-2
3.3.2 Scanner option bus query 3-2
3.4 Front panel scanner controls 3-2
3.4.1 Open and close channels (CHAN) 3-2
3.4.2 Configure channels (CONFIG-CHAN) 3-4
3.4.3 Scan configuration (CONFIG-SCAN) 3-5
3.4.4 Using SCAN to configure scan parameters and start scanning 3-5
3.4.5 Using EXIT to stop scanning 3-6
3.4.6 Manual scanning 3-6
3.5 IEEE-488 bus scanner commands 3-6
3.6 Closing and opening channels 3-9
3.6.1 Closing channels 3-9
3.6.2 Opening channels 3-9
3.7 Scanning channels 3-9
3.7.1 Front panel scanning 3-9
3.7.2 IEEE-488 bus scanning 3-10
3.8 Temperature measurements 3-11
3.8.1 Thermocouple temperature measurements 3-11
3.8.2 RTD temperature measurements 3-13
3.8.3 Using RTD and thermocouple sensors together 3-14
3.8.4 IEEE-488 programming example (temperature measurements) 3-15
3.9 Basic front panel operation 3-18
3.9.1 Configure stepping and scanning 3-18
3.9.2 Open and close channels 3-19
3.9.3 Start stepping or scanning 3-20
3.10 Temperature measurements 3-20
3.10.1 Temperature measurement configuration 3-21
3.10.2 Temperature measurement procedure 3-21
3.11 Remote operation 3-21
3.11.1 IEEE-488 programming example (temperature measurements) 3-23
3.12 Typical applications 3-25
3.12.1 Resistor testing 3-25
3.12.2 Resistor temperature coefficient testing 3-28
3.13 Measurement considerations 3-30
3.13.1 Thermocouple measurement error sources 3-30
3.13.2 Path isolation 3-31
3.13.3 Channel resistance 3-31
3.13.4 Magnetic fields 3-31
3.13.5 Electromagnetic Interference (EMI) 3-32
3.13.6 Ground loops 3-32
3.13.7 Keeping connectors clean 3-33

4 Service Information

4.1 Introduction 4-1
4.2 Handling and cleaning precautions 4-1
4.2.1 Handling precautions 4-1
4.2.2 Soldering precautions 4-2
4.3 Performance verification 4-2
4.3.1 Environmental conditions 4-2
4.3.2 Recommended equipment 4-2
4.3.3 Scanner card connections 4-2
4.3.4 Reference junction test 4-2
4.3.5 Path resistance tests 4-4
4.3.6 Contact potential tests 4-5
4.3.7 Isolation tests 4-8
4.4 Calibration 4-10
4.4.1 Calibration with thermistor probe 4-10
4.4.2 Calibration with thermocouple wire 4-11
4.5 Special handling of static-sensitive devices 4-13
4.6 Principles of operation 4-13
4.6.1 Block diagram 4-13
4.6.2 Relay control 4-14
4.6.3 Switching circuits 4-14
4.6.4 Power-on safeguard 4-14
4.6.5 Reference junction 4-14
4.7 Troubleshooting 4-14
4.7.1 Troubleshooting equipment 4-14
4.7.2 Troubleshooting access 4-14
4.7.3 Troubleshooting procedure 4-15
4.8 Scanner card modification 4-15

5 Replaceable Parts

5.1 Introduction 5-1
5.2 Parts lists 5-1
5.3 Ordering information 5-1
5.4 Factory service 5-1
5.5 Component layout and schematic diagram 5-1

A Thermocouple Basics

A.1 Definitions A-1
A.2 Theory A-1
A.3 Measurement procedure A-2
A.4 Measuring example A-2

B Thermocouple Conversion Tables

List of Illustrations

2 Card Connections and Installation

Figure 2-1 Model 2001-TCSCAN simplified schematic 2-2
Figure 2-2 Card connectors 2-3
Figure 2-3 Output connections 2-5
Figure 2-4 Routing wires through cable clamp 2-5
Figure 2-5 Typical connections for thermocouple scanning 2-6
Figure 2-6 Connections for voltage scanning 2-7
Figure 2-7 Typical connections for 2-wire resistance scanning 2-8
Figure 2-8 Typical connections for 4-wire resistance scanning 2-9
Figure 2-9 Card installation 2-11
Figure 2-10 2-pole output connections 2-13
Figure 2-11 4-pole output connections 2-14

3 Operation

Figure 3-1 Models 2001 and 2002 front panel scanner controls 3-3
Figure 3-2 Models 2000 and 2010 front panel scanner controls 3-18
Figure 3-3 2-wire resistance test connections 3-25
Figure 3-4 4-wire resistance test connections 3-26
Figure 3-5 Combining 2-pole and 4-pole switching 3-27
Figure 3-6 Resistor temperature coefficient testing 3-29
Figure 3-7 Path isolation resistance 3-31
Figure 3-8 Voltage attenuation by path isolation resistance 3-31
Figure 3-9 Power line ground loops 3-32
Figure 3-10 Eliminating ground loops 3-32

4 Service Information

Figure 4-1 Connections for reference junction test 4-4
Figure 4-2 Connections for path resistance checks 4-6
Figure 4-3 Connections for contact potential tests 4-7
Figure 4-4 Connections for same-channel isolation tests 4-9
Figure 4-5 Connections for channel-to-channel isolation tests 4-9
Figure 4-6 Connections for HI and LO terminal to chassis ground isolation tests 4-10
Figure 4-7 Calibration with thermistor probe 4-12
Figure 4-8 Calibration with thermocouple wire 4-13
Figure 4-9 Block diagram 4-14
Figure 4-10 Current-limiting resistor locations 4-16

A Thermocouple Basics

Figure A-1 Thermocouple measurement A-1

List of Tables

3 Operation

Table 3-1 Summary of SCPI commands (Models 2001 and 2002) 3-7
Table 3-2 Summary of SCPI commands (Models 2000 and 2010) 3-22
Table 3-3 Additional SCPI commands for the Model 2010 3-23

4 Service Information

Table 4-1 Verification and calibration equipment 4-3
Table 4-2 Recommended troubleshooting equipment 4-14
Table 4-3 Troubleshooting procedure 4-16

5 Replaceable Parts

Table 5-1 Electrical parts 5-2
Table 5-2 Mechanical parts 5-3

B Thermocouple Conversion Tables

Table B-1 NIST Quartic Coefficients for Types, S, R, B, E, J, K, and T B-2

1

General Information

1.1 Introduction

This section contains general information about the Model 2001-TCSCAN General Purpose/Thermocouple Scanner Card, which is designed to be used with the Model 2000, 2001, 2002, and 2010 DMMs to make accurate multi-channel thermocouple measurements. The DMMs will automatically convert type J, K, T, E, R, S, and B thermocouple voltages to Celsius, Fahrenheit, or Kelvin temperature readings.

The Model 2001-TCSCAN can also be used for a variety of nine-channel, mixed-signal switching applications. The 500nV-125V signal voltage range of the Model 2001-TCSCAN makes it well suited for both low and high signal levels.

Section 1 is arranged in the following manner:

1.2 Features

1.3 Warranty information

1.4 Manual addenda

1.5 Safety symbols and terms

1.6 Specifications

1.7 Unpacking and inspection

1.8 Repacking for shipment

1.9 Optional accessories

1.2 Features

The Model 2001-TCSCAN is a scanner card designed to be installed in the Model 2000, 2001, 2002, or 2010 Multimeter. Key features include:

- Built-in reference junction (channel 1).
- Low contact potential and offset current.
- Input connectors are in contact with an isothermal block to minimize temperature differences.
- Nine channels of 2-pole relay input.
- Four channel pairs configurable for 4-pole operation.
- Multiplex one of nine 2-pole, or one of four 4-pole channels into the DMM.

1.3 Warranty information

Warranty information is located on the inside front cover of this instruction manual. Should your Model 2001-TCSCAN require warranty service, contact the Keithley representative or authorized repair facility in your area for further information. When returning the scanner card for repair, be sure to fill out and include the service form at the back of this manual in order to provide the repair facility with the necessary information.

1.4 Manual addenda

Any improvements or changes concerning the scanner card or manual will be explained in an addendum included with the card. Addenda are provided in a page replacement format. Simply replace the obsolete pages with the new pages.

1.5 Safety symbols and terms

The following symbols and terms may be found on an instrument or used in this manual.

The ⚠ symbol on an instrument indicates that the user should refer to the operating instructions located in the instruction manual.

The ⚡ symbol an instrument shows that high voltage may be present on the terminal(s). Use standard safety precautions to avoid personal contact with these voltages.

The **WARNING** heading used in this manual explains dangers that might result in personal injury or death. Always read the associated information very carefully before performing the indicated procedure.

The **CAUTION** heading used in this manual explains hazards that could damage the scanner card. Such damage may invalidate the warranty.

1.6 Specifications

Model 2001-TCSCAN specifications are found at the front of this manual. All specifications except temperature accuracy are exclusive of the DMM specifications. Temperature accuracy specifications include DMM temperature accuracy.

Note that Model 2001-TCSCAN scan temperature accuracy is specified down to -100°C. For temperatures from -100.1°C and -200°C using type J, K, T, or E thermocouples, add an additional ±0.1°C of error.

1.7 Unpacking and inspection

1.7.1 Inspection for damage

The Model 2001-TCSCAN is packaged in a re-sealable, anti-static bag to protect it from damage due to static discharge and from contamination that could degrade its performance. Before removing the card from the bag, observe the precautions below on handling.

1.7.2 Handling precautions

- Always grasp the card by the side edges and covers. Do not touch the board surfaces or components.
- When the card is not installed in a DMM, keep the card in the anti-static bag, and store it in the original packing carton. After removing the card from its anti-static bag, inspect it for any obvious signs of physical damage. Report any such damage to the shipping agent immediately.

1.7.3 Shipment contents

The following items are included with every Model 2001-TCSCAN order:

- Model 2001-TCSCAN Scanner Card
- Model 2001-TCSCAN Instruction Manual
- CA-109 test lead set for output connections (two red, two black)
- Additional accessories as ordered

1.7.4 Instruction manual

If an additional Model 2001-TCSCAN Instruction Manual is required, order the manual package, Keithley part number 2001-TCSC-901-00. The manual package includes an instruction manual and any pertinent addenda.

1.8 Repacking for shipment

Should it become necessary to return the Model 2001-TCSCAN for repair, carefully pack the unit in its original packing carton or the equivalent, and include the following information:

- Advise as to the warranty status of the scanner card.
- Write ATTENTION REPAIR DEPARTMENT on the shipping label.
- Fill out and include the service form located at the back of this manual.

1.9 Optional accessories

Model 7401 — The Model 7401 is a thermocouple wire kit that includes 30.5m (100 ft.) of type K (chromel-alumel) thermocouple wire.

2

Card Connections and Installation

2.1 Introduction

WARNING

The procedures in this section are intended only for qualified service personnel. Do not perform these procedures unless you are qualified to do so. Failure to recognize and observe normal safety precautions could result in personal injury or death.

This section includes information on making connections to the Model 2001-TCSCAN and on installing the card in the DMM. This section is arranged as follows:

2.2 **Handling precautions:** Explains precautions that must be followed to prevent contamination to the scanner card assembly. Contamination could degrade the performance of the scanner card.

2.3 **Connections:** Covers the basics for connecting external circuitry to the scanner card.

2.4 **Typical connection schemes:** Provides some typical connection schemes for 2-pole and 4-pole operation, including thermocouple connections.

2.5 **Card installation and removal:** Summarizes the procedure to install the scanner card in the DMM, outlines scanner card output connections, and describes how to remove the card.

2.2 Handling precautions

To maintain high impedance isolation between channels, care should be taken when handling the scanner card to avoid contamination from such foreign materials as body oils. Such contamination can substantially lower leakage resistances, degrading card performance. To avoid possible contamination, always grasp the scanner card by the side edges or covers. Do not touch board surfaces, components, or areas adjacent to electrical contacts.

Dirt build-up over a period of time is another possible source of contamination. To avoid this problem, operate the multimeter and scanner card in a clean environment. If the card becomes contaminated, it should be thoroughly cleaned as explained in paragraph 4.2.

2.3 Connections

This paragraph provides the information necessary to connect your thermocouples or other external test circuitry to the scanner card.

WARNING

The following connection information is intended to be used by qualified service personnel. Failure to recognize and observe standard safety precautions could result in personal injury or death.

NOTE

All connecting wires or leads must be connected to the card before it is installed in the DMM.

2.3.1 Card configuration

Figure 2-1 shows a simplified schematic diagram of the Model 2001-TCSCAN. The scanner card has nine input channels and two outputs. Channel 1 is the reference junction used for thermocouple temperature measurements.

4-pole paired channels are as follows:

- Channels 2 and 7
- Channels 3 and 8
- Channels 4 and 9
- Channels 5 and 10

CAUTION

Do not attempt to pair channels 1 and 6. Possible damage to the reference junction may result if a signal is applied to channel 6 if channels 1 and 6 are used together in the 4-pole mode.

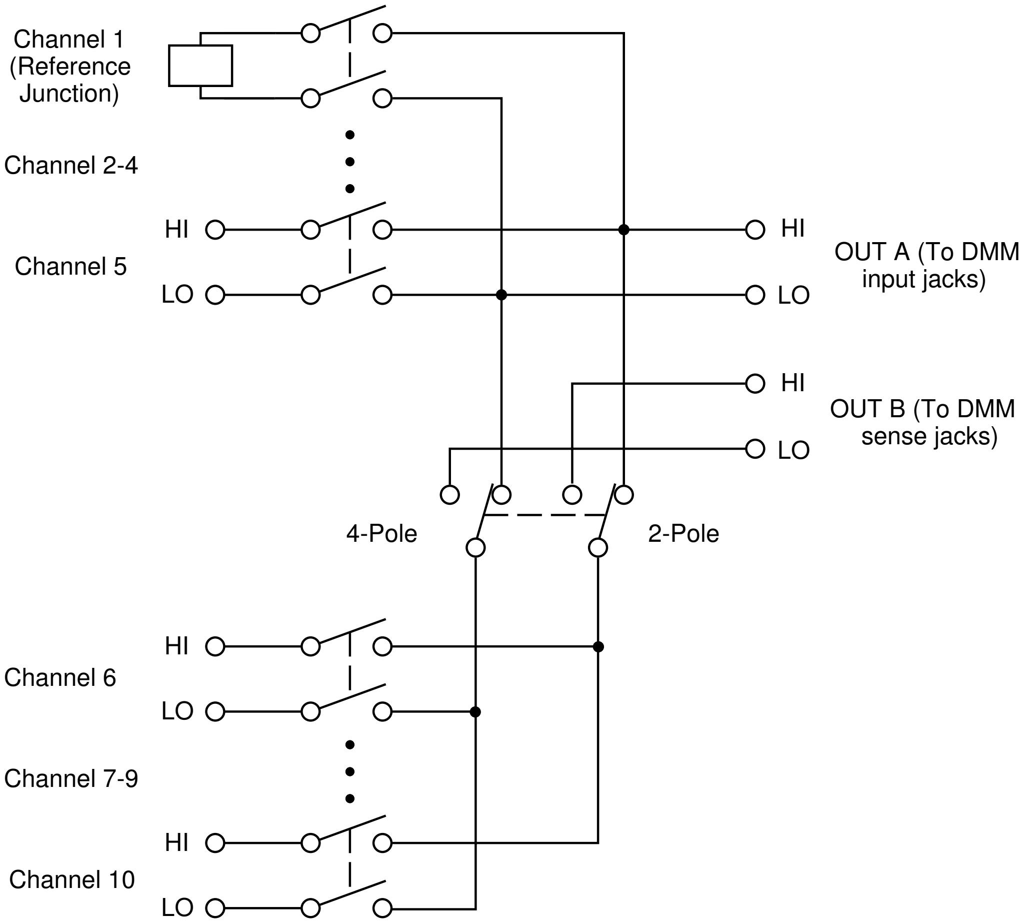
Channel 1
(Reference
Junction)
Channel 2-4
HI
Channel 5
LO
HI
OUT A (To DMM
input jacks)
LO
HI
OUT B (To DMM
sense jacks)
LO
4-Pole
2-Pole
HI
Channel 6
LO
Channel 7-9
HI
Channel 10
LO

Figure 2-1
Model 2001-TCSCAN simplified schematic

2.3.2 Card connectors

Figure 2-2 shows the input/output connectors for the card. Card connections include:

- CH 2-10 (channels 2-10): HI and LO input terminals are provided for each of the nine channels on the card.

NOTE

> Channels 5 and 10 have current-limiting resistors installed. Path resistance for these two channels is approximately 240Ω.

- OUT A: HI and LO output connections for all nine channels in the 2-pole mode or channels 2-5 in the 4-pole mode.
- OUT B: HI and LO output connections for channels 7-10 in the 4-pole mode.

In order to gain access to the connections, first open the plastic shield by pressing in on the locking tab. Swing the shield away from the circuit board.

2.3.3 Wiring procedure

Perform the following procedure to wire circuitry to the screw terminals on the scanner card.

WARNING

Make sure all power is off and any stored energy in external circuitry is discharged before connecting or disconnecting wires.

CAUTION

Mechanical shock may open or close latching relays on the scanner card. Before enabling any external sources, open all relays by inserting the Model 2001-TCSCAN into the DMM and turning on the power.

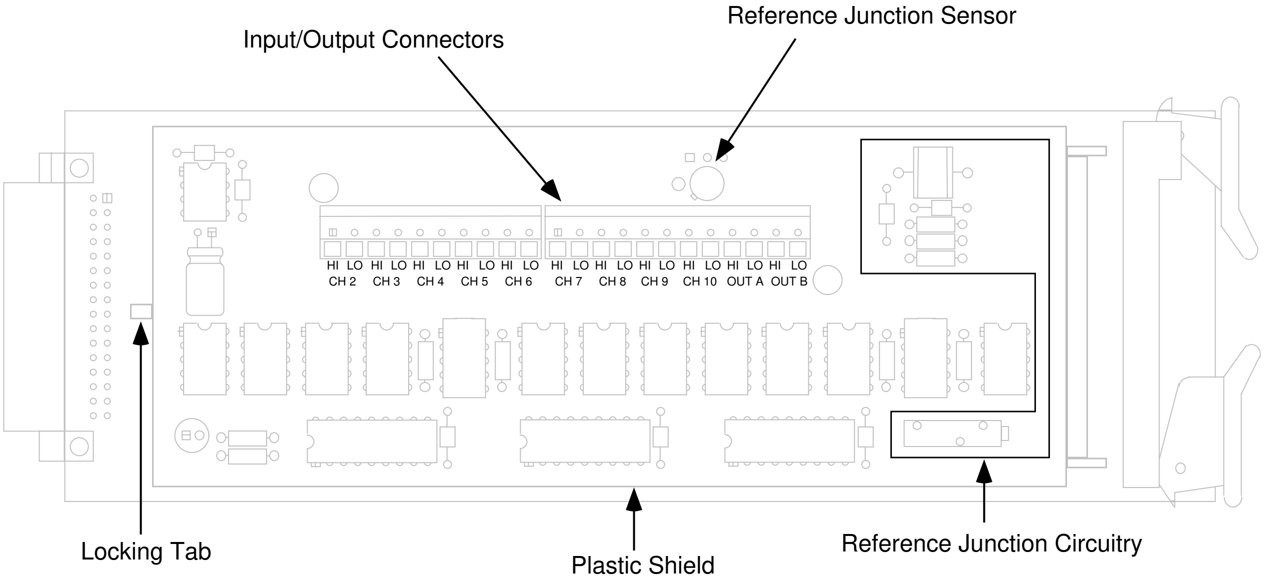
Input/Output Connectors
Reference Junction Sensor
HI LO HI LO HI LO HI LO HI LO
CH 2 CH 3 CH 4 CH 5 CH 6
HI LO HI LO HI LO HI LO HI LO HI LO
CH 7 CH 8 CH 9 CH 10 OUT A OUT B
Locking Tab
Plastic Shield
Reference Junction Circuitry

Figure 2-2
Card connectors

1. Open the plastic shield to gain access to the connectors.
2. Strip approximately ” of insulation from the end of each wire.

NOTE

Standard thermocouple wire or #22 AWG stranded wire is recommended for scanner card connections.

3. Turn the screw terminal several turns counter-clockwise until the access hole is open. Insert the wire in the access hole.
4. While holding the wire in place, tighten the connector screw securely.

CAUTION

Be sure not to over tighten screw terminals, or the connectors may be damaged.

5. Repeat steps 2 through 4 for each wire to be connected.
6. Dress input wires through the cable clamp, as discussed in paragraph 2.3.5.

WARNING

If thermocouples are going to be floated above 30V RMS, 42.4V peak, 60VDC, make sure thermocouple wires have adequate insulation.

2.3.4 Output connections

Use the supplied test leads for scanner output connections. Connect red leads to the output (OUT A and OUT B) HI terminals, and connect black leads to the output LO terminals. See Figure 2-3 for details. Dress output test leads through the cable clamp, as described in paragraph 2.3.5. After all wires are connected and secure, close the plastic shield, and secure it with the locking tab.

NOTE

If you intend to use the scanner card only in the 2-pole mode, it is not necessary to connect output leads to both OUT A and OUT B. Use only OUT A for the 2-pole mode.

After the scanner card is installed, the output leads must be connected to the multimeter rear panel input jacks. See paragraph 2.5.2 for details.

2.3.5 Dressing leads

After wires are connected to the terminal blocks, they should be dressed through the cable clamp as shown in Figure 2-4. To do so, unlatch the clip that holds the cable clamp together, then route all wires flat against the lower half of the clamp. Clamp the wires down, then secure the clamp with the metal clip unlatched earlier.

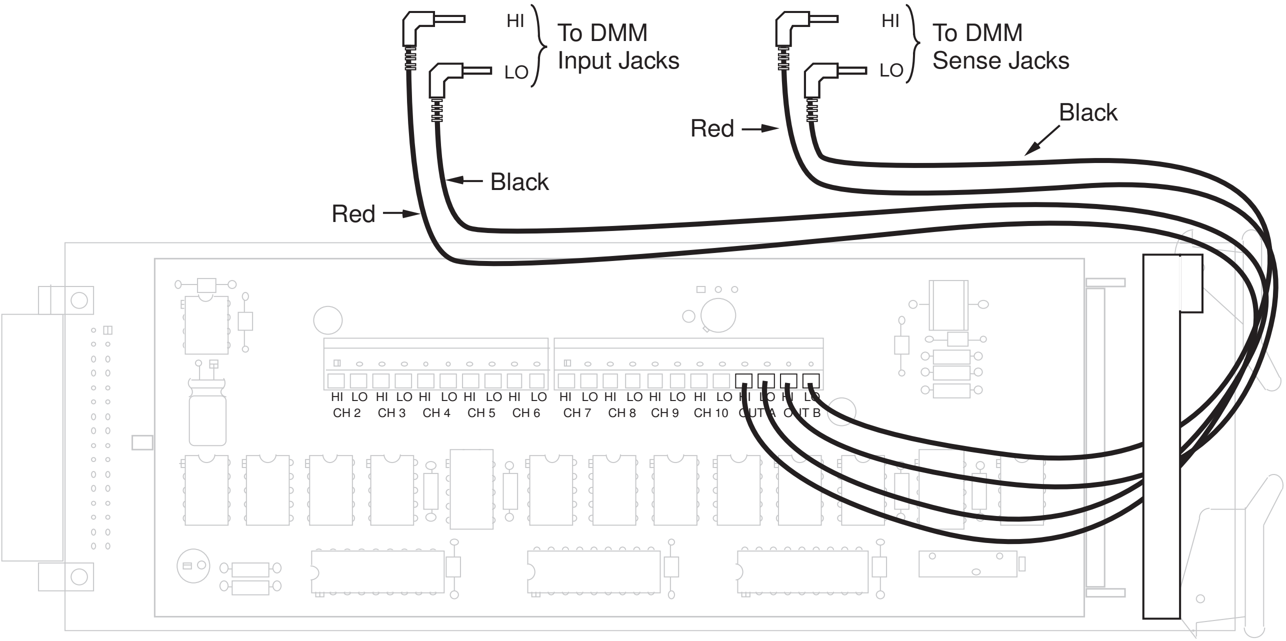
HI
LO
To DMM
Input Jacks
HI
LO
To DMM
Sense Jacks
Red
Black
Red
Black
HI LO HI LO HI LO HI LO HI LO
CH 2 CH 3 CH 4 CH 5 CH 6
HI LO HI LO HI LO HI LO HI LO HI LO
CH 7 CH 8 CH 9 CH 10 OUT A OUT B

Note: OUT B connections not required
for 2-pole operation.

Figure 2-3
Output connections

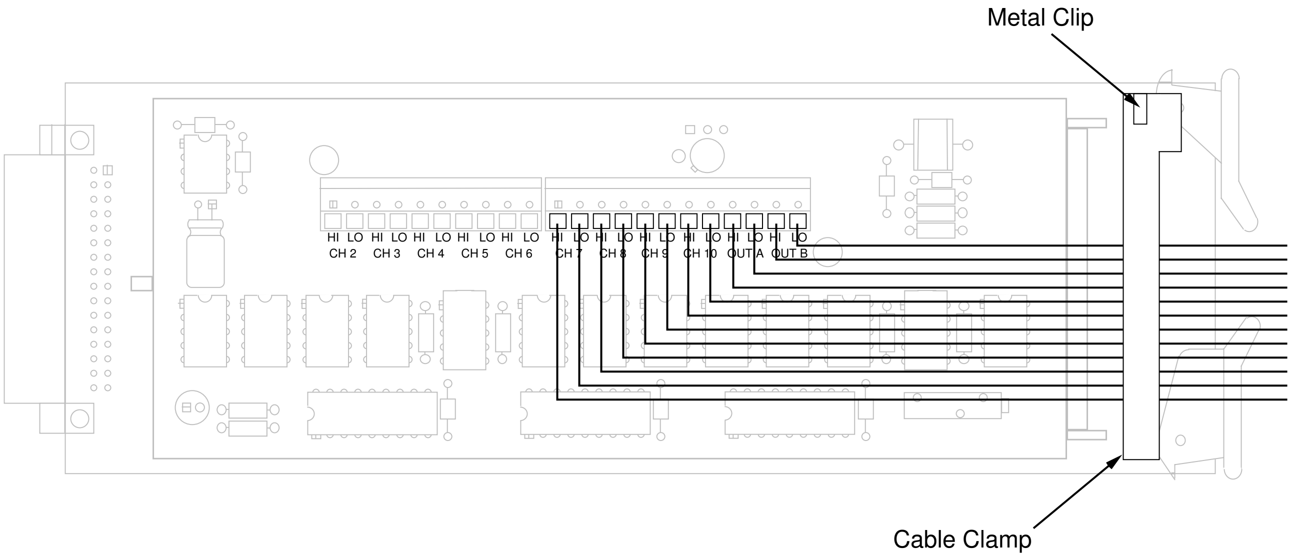
Metal Clip
HI LO HI LO HI LO HI LO HI LO
CH 2 CH 3 CH 4 CH 5 CH 6
HI LO HI LO HI LO HI LO HI LO HI LO
CH 7 CH 8 CH 9 CH 10 OUT A OUT B
Cable Clamp

Figure 2-4
Routing wires through cable clamp

2.4 Typical connecting schemes

The following paragraphs discuss typical connections for the scanner card.

2.4.1 Thermocouple connections

Figure 2-5 shows typical thermocouple connections. Note that thermocouples are connected to channels 2-10, and output connections are taken from the OUT A terminals.

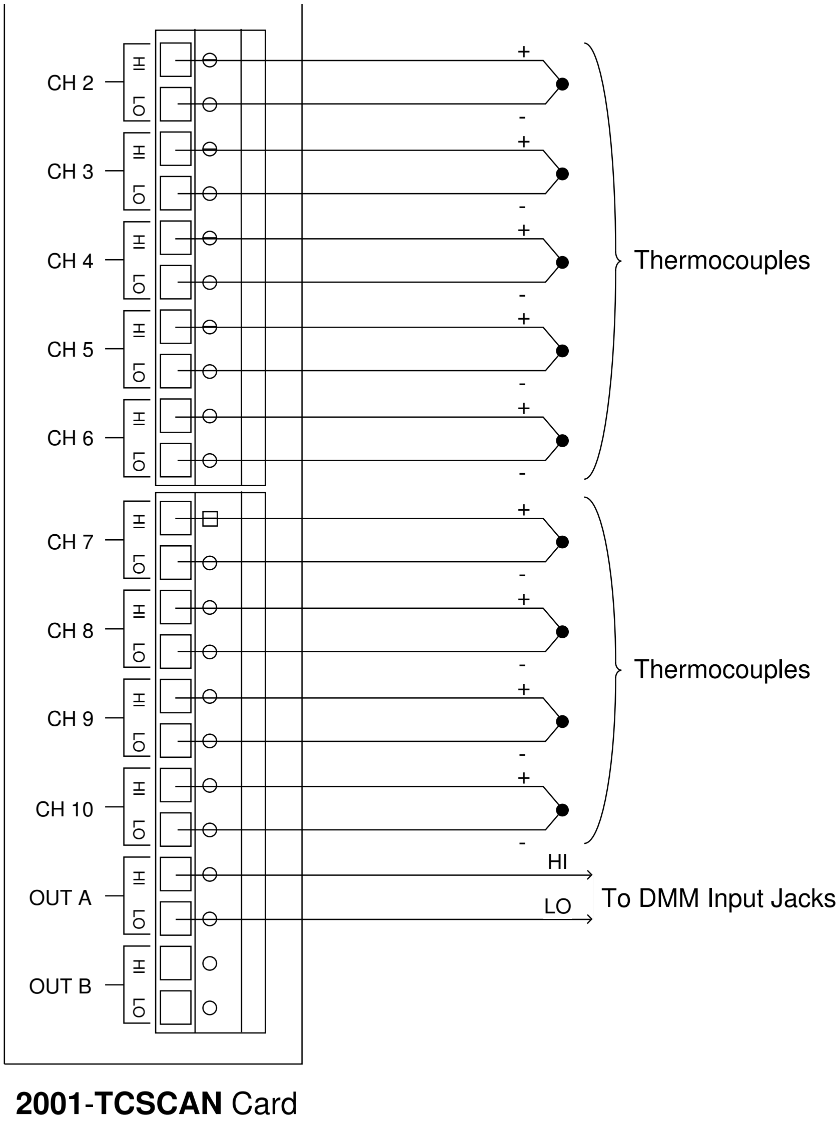
CH 2
CH 3
CH 4
CH 5
CH 6
CH 7
CH 8
CH 9
CH 10
OUT A
OUT B
HI
LO
+
-
Thermocouples
Thermocouples
HI
LO
To DMM Input Jacks
2001-TCSCAN Card

Figure 2-5
Typical connections for thermocouple scanning

2.4.2 Voltage connections

Figure 2-6 shows typical connections for voltage measurements. Note that up to nine voltage sources can be switched with this configuration. This basic configuration can be used for the following types of measurements:

- DCV
- ACV
- Frequency

Channels (2-10) can be used with this configuration.

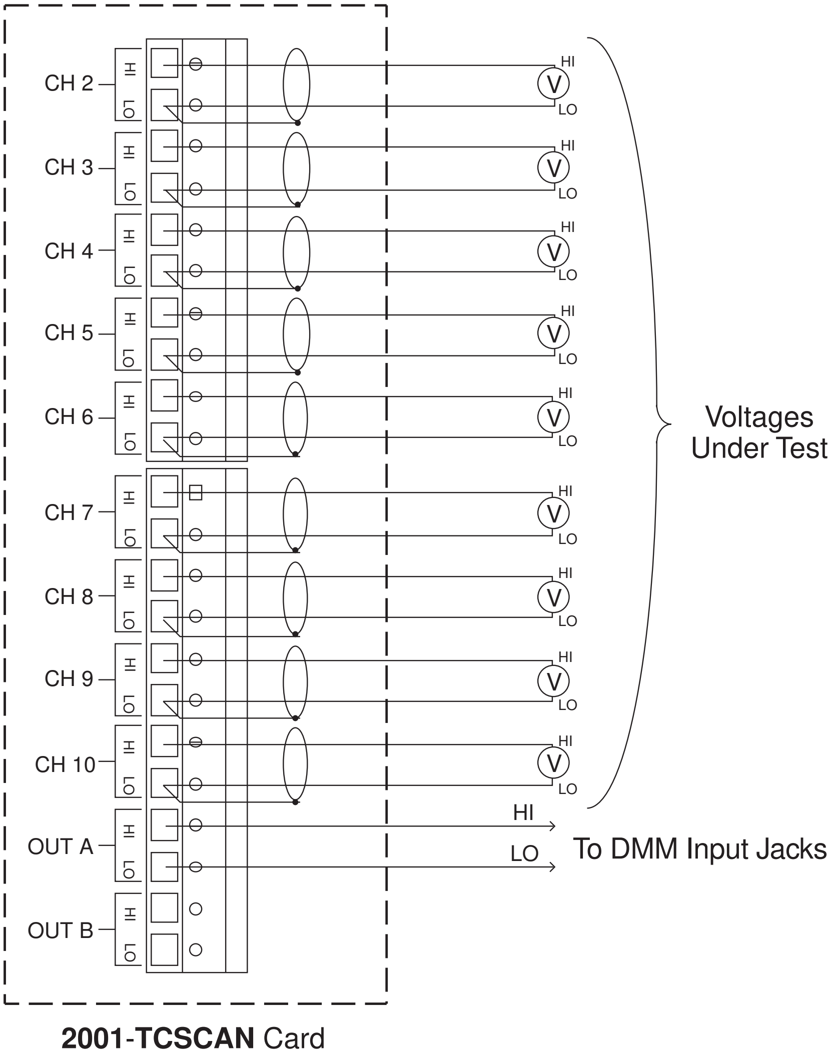
CH 2
CH 3
CH 4
CH 5
CH 6
CH 7
CH 8
CH 9
CH 10
OUT A
OUT B
HI
LO
V
Voltages Under Test
HI
LO
To DMM Input Jacks
2001-TCSCAN Card

Figure 2-6
Connections for voltage scanning

2.4.3 Resistance connections

■ 2-Pole connections

Figure 2-7 shows typical 2-pole resistor test connections. The 2-pole resistance configuration can be used to test up to seven DUTs.

NOTE

Channels 5 and 10 should not be used to switch 2-wire resistance measurements because of the relatively high path resistance (≅240Ω) of these two channels due to the factory-installed current-limiting resistors. (Unless the card is modified; see paragraph 4.8.)

■ 4-Pole connections

Typical 4-pole resistance connections are shown in Figure 2-8. This general configuration can be used with channel pairs 2-5 and 7-10 to scan:

- 4-wire resistance measurements.
- 4-wire RTD temperature measurements.

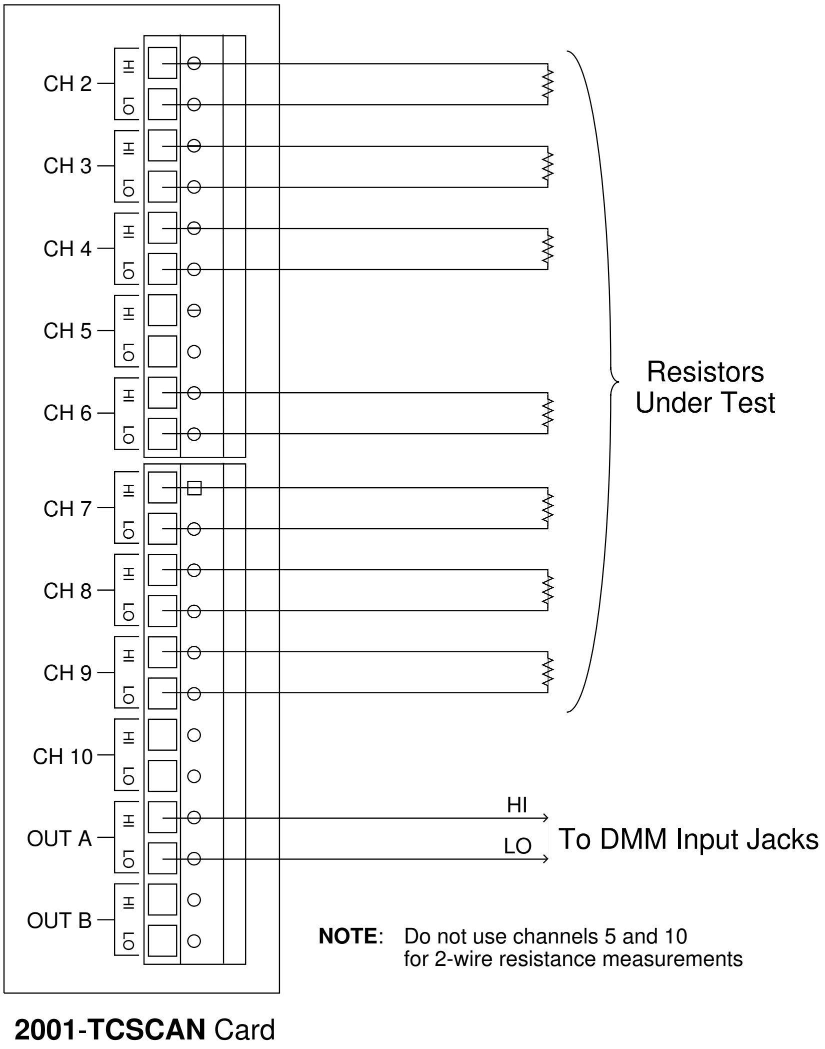
CH 2
CH 3
CH 4
CH 5
CH 6
CH 7
CH 8
CH 9
CH 10
OUT A
OUT B
HI
LO
Resistors Under Test
HI
LO
To DMM Input Jacks
2001-TCSCAN Card

NOTE: Do not use channels 5 and 10 for 2-wire resistance measurements

Figure 2-7
Typical connections for 2-wire resistance scanning

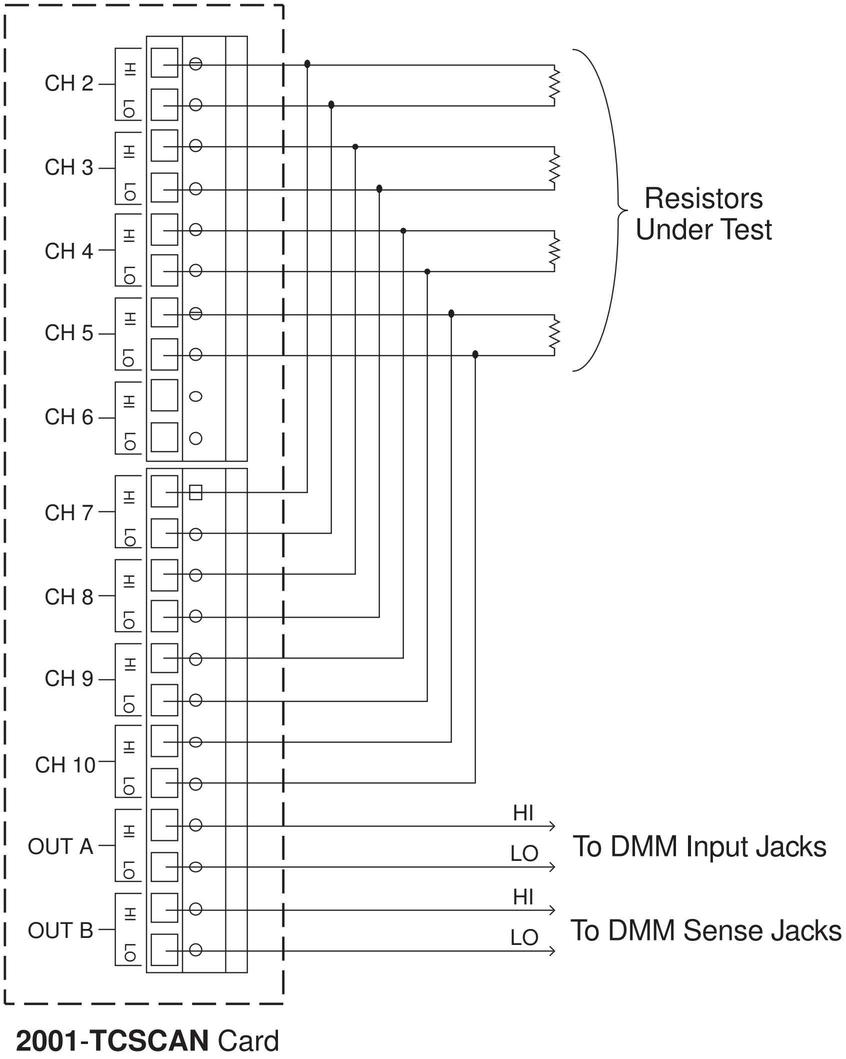
CH 2
CH 3
CH 4
CH 5
CH 6
CH 7
CH 8
CH 9
CH 10
OUT A
OUT B
HI
LO
Resistors Under Test
HI
LO
To DMM Input Jacks
HI
LO
To DMM Sense Jacks
2001-TCSCAN Card

Figure 2-8
Typical connections for 4-wire resistance scanning

2.5 Card installation and removal

This paragraph explains how to install and remove the Model 2001-TCSCAN card assembly from the DMM.

WARNING

Installation or removal of the Model 2001-TCSCAN should be performed only by qualified service personnel. Failure to recognize and observe standard safety precautions could result in personal injury or death.

CAUTION

To prevent contamination to the scanner card that could degrade performance, handle the card assembly only by the card edges and covers.

NOTE

Wiring connections must made before installing the scanner card. See paragraph 2.4 for wiring details.

2.5.1 Scanner card installation

Perform the following steps and refer to Figure 2-9 to install the card assembly in the DMM:

WARNING

Turn off power to all instrumentation (including the DMM), and disconnect all line cords. Make sure all power is removed and any stored energy in external circuitry is discharged.

1. Remove the cover plate from the OPTION SLOT on the rear panel of the DMM. To do so, pry out the two fasteners, then remove the cover plate.
2. Slide the card edges into the guide rails inside the multimeter (solder side up).
3. With the ejector arms in the unlocked position, carefully push the card all the way forward until the arms engage the ejector clips. Push both arms inward to lock the card into the multimeter.
4. After installation, connect the output leads to the multimeter as discussed below.

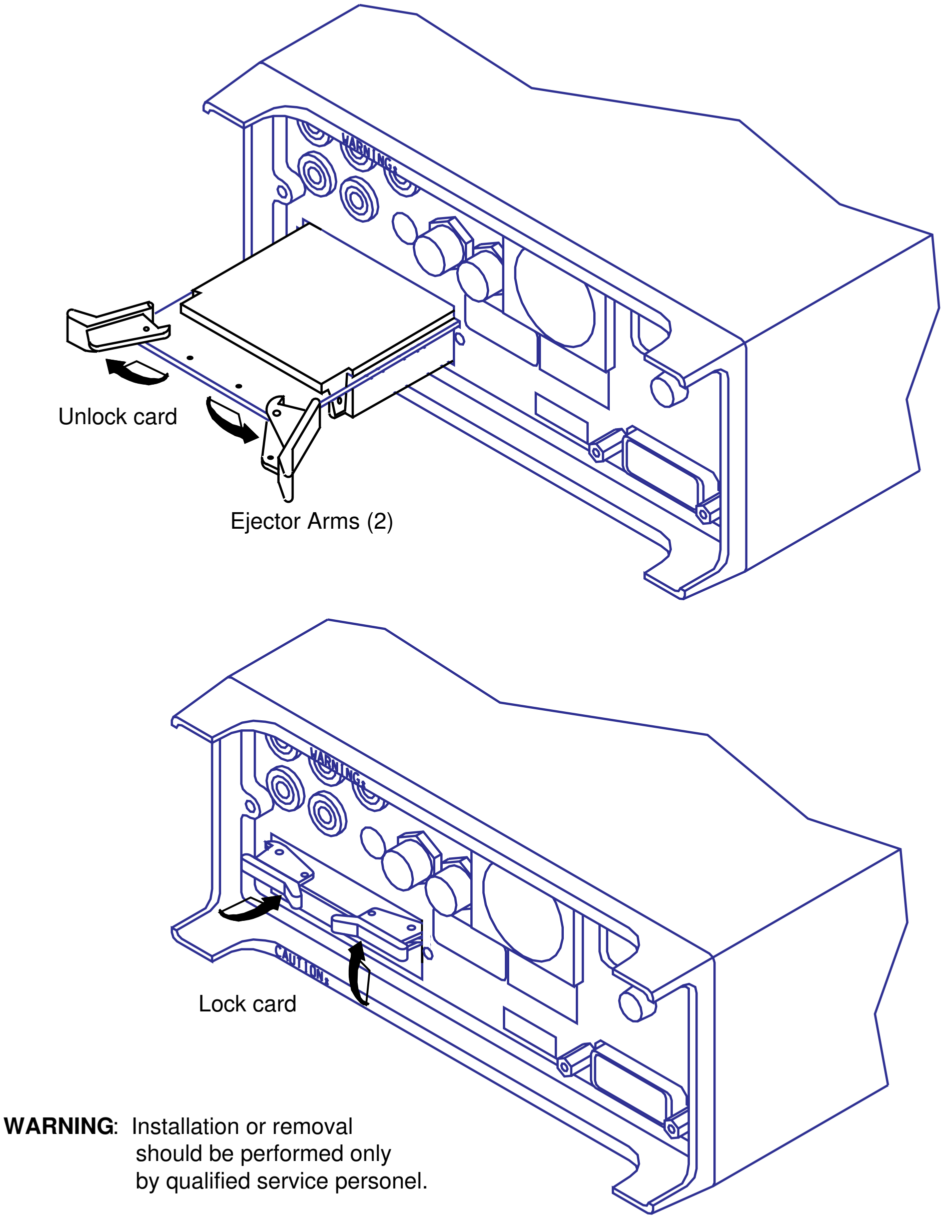
WARNING:
Unlock card
Ejector Arms (2)
WARNING:
CAUTION:
Lock card

WARNING: Installation or removal should be performed only by qualified service personel.

Figure 2-9
Card installation

2.5.2 Output connections to multimeter

After installation, connect the scanner card output leads to the DMM rear panel jacks as follows:

- For 2-pole operation, connect OUT A HI (red) to INPUT HI, and connect OUT A LO (black) to INPUT LO. See Figure 2-10.
- For 4-pole operation, connect OUT A HI (red) to INPUT HI, and connect OUT A LO (black) to INPUT LO. Also connect OUT B HI (red) to SENSE HI, and connect OUT B LO (black) to SENSE LO. See Figure 2-11.

NOTE

Be sure to select the rear inputs with the DMM front panel INPUTS switch when using the scanner.

2.5.3 Scanner card removal

Follow the steps below to remove the scanner card from the multimeter:

WARNING

Turn off power to all instrumentation (including the DMM) and disconnect all line cords. Make sure all power is removed and any stored energy in external circuitry is discharged.

1. Unlock the card by pulling the latches outward.
2. Carefully slide the card out of the multimeter.
3. If the multimeter is to be operated without a scanner card installed, install the cover plate over the OPTION SLOT.

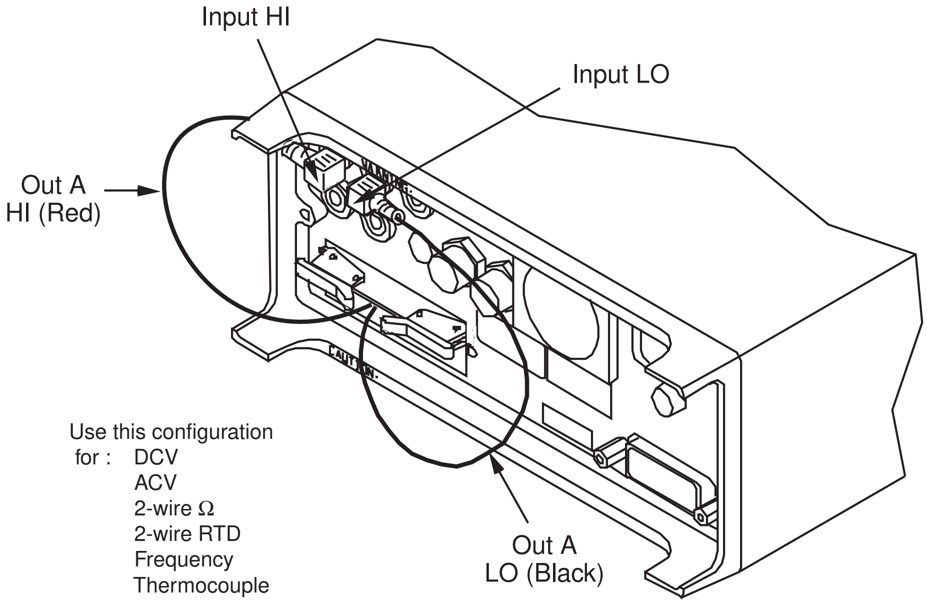
Input HI
Input LO
Out A
HI (Red)
Out A
LO (Black)

Use this configuration
for : DCV
ACV
2-wire Ω
2-wire RTD
Frequency
Thermocouple

A. Models 2001 and 2002

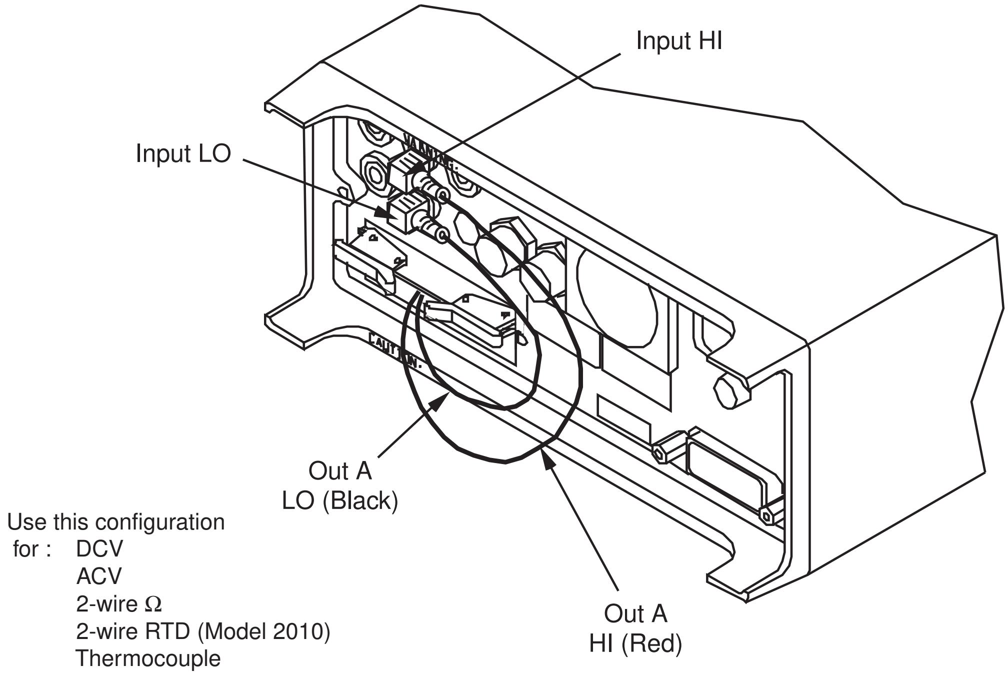
Input HI
Input LO
Out A
LO (Black)
Out A
HI (Red)

Use this configuration
for : DCV
ACV
2-wire Ω
2-wire RTD (Model 2010)
Thermocouple

B. Models 2000 and 2010

Figure 2-10
2-pole output connections

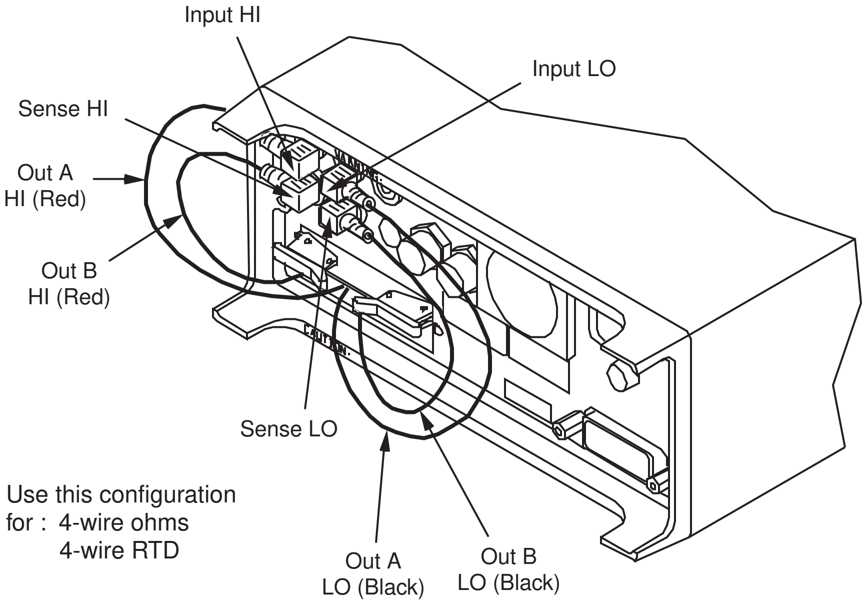
Input HI
Input LO
Sense HI
Out A
HI (Red)
Out B
HI (Red)
Sense LO
Out A
LO (Black)
Out B
LO (Black)

Use this configuration
for : 4-wire ohms
4-wire RTD

A. Models 2001 and 2002

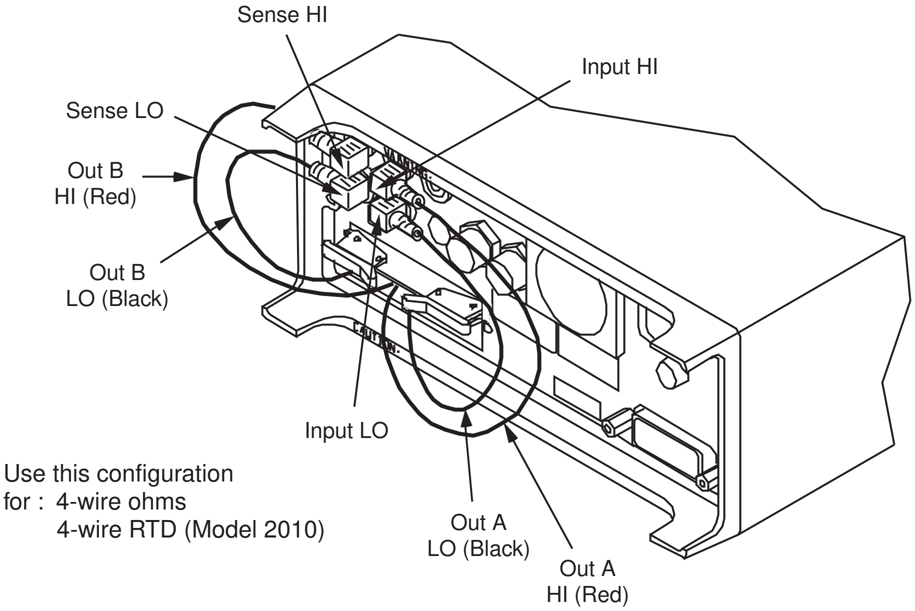
Sense HI
Input HI
Sense LO
Out B
HI (Red)
Out B
LO (Black)
Input LO
Out A
LO (Black)
Out A
HI (Red)

Use this configuration
for : 4-wire ohms
4-wire RTD (Model 2010)

B. Models 2000 and 2010

Figure 2-11
4-pole output connections

3

Operation

3.1 Introduction

This section contains detailed information on front panel and IEEE-488 bus operation of the Model 2001-TCSCAN. The information in this section is organized as follows:

3.2 Signal limitations: Summarizes the maximum signals that can be applied to the Model 2001-TCSCAN.

3.3 Scanner card detection: Discusses how the scanner card is detected and how to determine whether or not the card is installed with a bus command.

Models 2001 and 2002 operation:

3.4 Front panel scanner controls: Gives an overview of the Models 2001 and 2002 Multimeter front panel controls used to control the scanner card.

3.5 IEEE-488 bus scanner commands: Summarizes bus commands necessary to control the scanner card.

3.6 Opening and closing channels: Covers the basic methods for closing and opening channels.

3.7 Scanning channels: Details how to configure scan parameters and how to perform scanning.

3.8 Temperature measurements: Describes using the scanner card to make temperature measurements using themocouples and RTD probes.

Models 2000 and 2010 operation:

3.9 Basic front panel operation: Explains how to use the Models 2000 and 2010 to perform basic scanner card operations using the Model 2001-TCSCAN card.

3.10 Temperature measurements: Explains how to use the scanner card with the Models 2000 and 2010 to make temperature measurements.

3.11 Remote operation: Summarizes the SCPI commands necessary to control the scanner card and make temperature measurements.

Models 2000, 2001, 2002, and 2010:

3.12 Typical applications: Discusses typical applications for the Model 2001-TCSCAN.

3.13 Measurement considerations: Discusses a number of measurement considerations that should be taken into account when using the scanner.

NOTE

Before using the Model 2001-TCSCAN scanner card, you should be thoroughly familiar with the operation of the Model 2001 Multimeter. See the Model 2001 Operator's Manual for details.

3.2 Signal limitations

CAUTION

To prevent damage to the Model 2001-TCSCAN, do not exceed the maximum signal level specifications of the card.

To prevent over-heating or damage to the relays, never exceed the following maximum input signal levels:

DC signals: 110V DC, 1A switched, 30VA (resistive load).[1]

AC signals: 125V rms or 175V AC peak, 1A switched, 62.5VA (resistive load). (Channels 5 and 10 maximum power = 0.25VA due to factory installed current-limiting resistors. See paragraph 4.8 for modification.)

3.3 Scanner card detection

3.3.1 Power-up detection

The scanner card is detected only at power-on. If the card is plugged into the DMM after the power is turned on, the card will not be recognized as being present by the DMM.

CAUTION

Plugging in the scanner card with power turned on may result in damage to both the Model 2001-TCSCAN and the DMM.

If the card is not present at power-on, scanner bus commands or queries will generate a “Missing hardware error”, and front panel operations pertaining to the scanner will inform you that no scanner is present.

3.3.2 Scanner option bus query

*OPT? is an IEEE 488.2 common query which will allow you determine whether or not the Model 2001-TCSCAN card is installed. The response to this query has two fields. The first field identifies the presence or absence of expansion memory, and the second field indicates whether or not the scanner is present as follows:

- 0: Scanner not installed.
- 2001-SCAN: Model 2001-TCSCAN scanner card installed.

Refer to the individual DMM operator’s manual for more details on using the *OPT? query.

3.4 Front panel scanner controls

NOTE

Use paragraphs 3.4 through 3.8 for scanner card operation using the Models 2001 and 2002 DMMs. Models 2000 and 2010 DMM operation is covered in paragraphs 3.9 through 3.11.

The following paragraphs give an overview of the various Model 2001 Multimeter controls used with the scanner. Figure 3-1 shows the front panel of the Models 2001 and 2002. Controls that affect Model 2001-TCSCAN operation include:

- CHAN: Allows you to open and close channels directly.
- CONFIG-CHAN: Defines the measurement functions for each scanner channel.
- CONFIG-SCAN: Selects internal/external scan list.
- SCAN: Enters scan configuration menu.
- ◀ and ▶ : Manually scans through channels.
- TEMP: Enables temperature measurements.
- CONFIG-TEMP: Selects sensor type, thermocouple type, and reference junctions.

3.4.1 Open and close channels (CHAN)

The CHAN key allows you directly:

- Open any closed channel(s) immediately.
- Close a specific channel (or channel pair for 4-wire functions).

Pressing CHAN will display the following menu choices:

```
CHANNEL SELECTION
CLOSE-CHANNEL   OPEN-ALL-CHANNELS
```

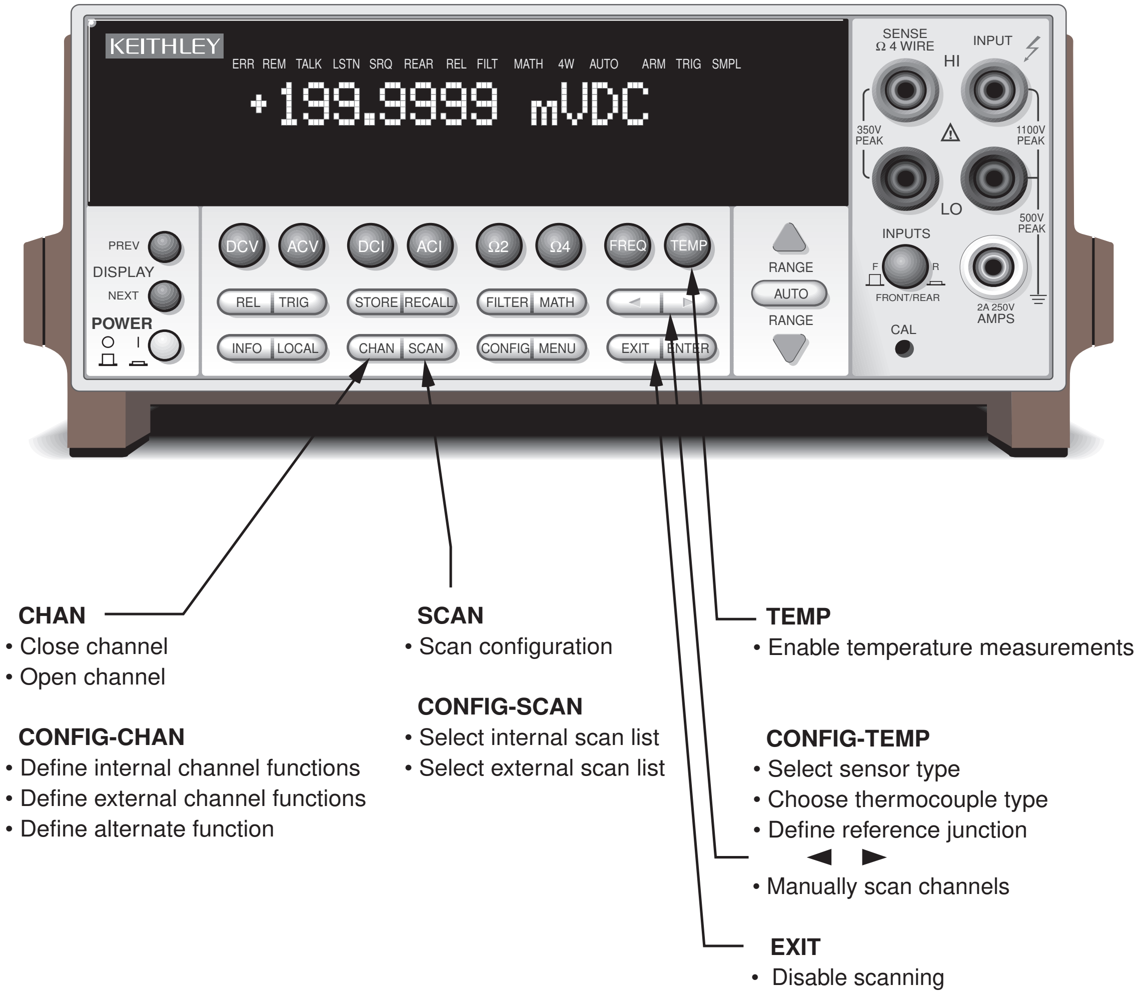
KEITHLEY
ERR REM TALK LSTN SRQ REAR REL FILT MATH 4W AUTO ARM TRIG SMPL
+199.9999 mVDC
PREV
DISPLAY
NEXT
POWER
DCV
ACV
DCI
ACI
Ω2
Ω4
FREQ
TEMP
REL
TRIG
STORE
RECALL
FILTER
MATH
INFO
LOCAL
CHAN
SCAN
CONFIG
MENU
EXIT
ENTER
RANGE
AUTO
RANGE
SENSE Ω 4 WIRE
INPUT
HI
350V PEAK
1100V PEAK
LO
500V PEAK
INPUTS
F
R
FRONT/REAR
2A 250V AMPS
CAL

CHAN
- Close channel
- Open channel

CONFIG-CHAN
- Define internal channel functions
- Define external channel functions
- Define alternate function

SCAN
- Scan configuration

CONFIG-SCAN
- Select internal scan list
- Select external scan list

TEMP
- Enable temperature measurements

CONFIG-TEMP
- Select sensor type
- Choose thermocouple type
- Define reference junction

◄ ►
- Manually scan channels

EXIT
- Disable scanning

Figure 3-1
Models 2001 and 2002 front panel scanner controls

■ OPEN-ALL-CHANNELS

Selecting OPEN-ALL-CHANNELS will immediately open any closed scanner card channel(s).

■ CLOSE-CHANNELS

Selecting CLOSE-CHANNEL will display the following message prompting you to select the channel to close:

ENTER CHAN#01 (1-10)

The field entry after "ENTER CHAN#" indicates the channel to close. To close a channel, simply use the cursor and range keys to select the number of the channel to close, then press ENTER. The number of the closed channel will be displayed on the front panel along with normal readings. Keep in mind that channel 1 is the reference junction.

Selecting a different channel from the one that is presently closed will cause the closed channel to open and allow a settling time before closing the selected channel.

Channel relays will be closed according to the presently selected function. If a 2-wire function is used, only the relay for that one channel will be closed. If a 4-wire function is selected, both the selected channel relay and the matching relay pair will close. For example, closing channel 2 will also close the channel 7 relay. Fixed 4-pole relay pairs are:

- 2 and 7
- 3 and 8
- 4 and 8
- 5 and 10.

3.4.2 Configure channels (CONFIG-CHAN)

CONFIG-CHAN allows you to:

- Select measurement functions for internal (Model 2001-TCSCAN) channels.
- Select measurement functions for channels in an external scanner used with the Model 2001/2002.
- Define an alternate measurement function which can then be assigned to specific channels.

Pressing CONFIG then CHAN will display the following menu:

```
CONFIGURE CHANNELS
INTERNAL-CHANS   EXTERNAL-INPUTS ▶
◀ SAVE-ALT-FCN   RESTORE-ALT-FCN
```

■ INTERNAL-CHANS

The INTERNAL-CHANS selection allows you to set the measuring function for each of the Model 2001-SCAN channels while scanning. When this selection is made, the following submenu will be displayed:

```
SET INTERNAL CHANS
1=DCV   2=DCV   3=DCV   4=DCV   5=DCV▶
◀ 6=DCV   7=DCV   8=DCV   9=DCV   10=DCV
```

With this menu displayed, use the cursor keys to select the channel, and use the up arrow and down arrow (range) keys to select the desired measuring function for each channel:

DCV: DC volts

ACV: AC volts

Ω2W: 2-wire ohms

Ω4W: 4-wire ohms

FRQ: frequency

TMP: temperature

ALT: alternate function (see below)

JN1 – JN5: Reference junctions

--- : None

Ω4W function: The Ω4W function is valid only for channels 2-5. If selected, “PRD” (paired) will be shown on the corresponding paired channel 7-10. Once Ω4W is selected on channels 2 to 5, changing the assignment to a different function will de-assign the paired channel and change the function to “---” (none).

CAUTION

Four-wire functions should not be used with channels 1 and 6.

TMP function: Similarly, the TMP selection is valid only for channels 2-5 if the RTD temperature sensor is a 4-wire type. If a 2-wire RTD type is used, channels 6-10 could be assigned to the TMP function, but if the sensor type is later change to 4-wire RTD, any channel from 6-10 will then be set to “---” (none). Thermocouple TMP measurements can be assigned to channels 2-10.

No function (---): Selecting none (---) effectively removes that channel from the scan list. When scanning, the instrument will skip any channels that have no function defined.

JN functions: JN1 through JN5 are used to assign a reference junction to a channel. With the Model 2001-TCSCAN, the reference junction must be assigned to channel 1.

■ EXTERNAL-INPUTS

This menu item allows you to select measurement functions for an external scanner used with the Model 2001/2002 Multimeter. See the Model 2001/2002 Operator’s Manual for details.

■ SAVE-ALT-FCN/RESTORE-ALT-FCN

An ALT (alternate) function is one that cannot be directly accessed with one of the eight function keys. For example, assume that you select the ACV peak function using CONFIG-ACV. You can then use SAVE-ALT to assign peak ACV to the ALT function. Whenever the ALT function is encountered in the scan list, the instrument will switch to the ACV peak function for that channel even if the instrument is measuring a different type of ACV (RMS for example).

You can also use the ALT function to store an existing main function but with a different set of operating parameters. For example, you could set up thermocouple operating parameters for the TMP function and RTD setup parameters as the ALT function. This arrangement allows you to specify changes in virtually any measurement parameter from channel to channel even if the measurement functions are the same.

SAVE-ALT-FCN: Stores the presently selected function and all its configured settings as the ALT function.

RESTORE-ALT-FCN: Restores the function that was saved as the ALT function and all associated settings as if a normal function change were taking place.

3.4.3 Scan configuration (CONFIG-SCAN)

CONFIG-SCAN allows you to select the internal or external channel list for scanning.

Pressing CONFIG-SCAN will display the following menu:

```
SCAN OPERATION
INTERNAL  EXTERNAL  RATIO  DELTA
```

These choices select the action the instrument will take when it is triggered.

■ INTERNAL

This selection enables scanning with the internal Model 2001- TCSCAN scanner card.

■ EXTERNAL

This menu selection enables scanning with an external scanner card located in a switching mainframe. This selection operates in a manner similar to INTERNAL except that the internal scanner card is not used.

■ RATIO/DELTA

RATIO and DELTA should not be used with the Model 2001-TCSCAN. These selections are intended for use with a different scanner card.

3.4.4 Using SCAN to configure scan parameters and start scanning

Once the internal or external scan list is enabled, use the SCAN key to configure scan count, scan interval, and enable buffer storage. The steps below outline the basic procedure for using the SCAN key to configure internal scanner operation.

1. From normal display, press CONFIG-SCAN. The instrument will display the following:

   ```
   SCAN OPERATION
   INTERNAL  EXTERNAL  RATIO  DELTA
   ```

2. Select INTERNAL, then press ENTER.
3. Press SCAN. The unit will display the following message:

   ```
   SCAN COUNT = 00010
   ```

4. Using the range and cursor keys, select the number of scan sequences, then press ENTER. The instrument will display the following:

   ```
   USE SCAN TIMER?
   YES  NO
   ```

5. If you do not wish to use the scan timer (interval between scans), select NO, then press ENTER, and go on to step 7. If you wish to use and program the interval between scans, select YES, then press ENTER. The instrument will display the following:

   ```
   INTRVL = 000002.500
   ```

6. Using the range and cursor keys, select the desired interval (in seconds) between scan sequences, then press ENTER.
7. The instrument will then prompt you as to whether or not you wish to store data in the buffer as follows:

   ```
   DATA TO MEMORY?
   YES  NO
   ```

8. To store scanned data in the buffer, select YES; otherwise choose NO, then press ENTER.

9. If you elected to store data in memory, the instrument will prompt you as follows:

   00100 RDGS TO BUFFER
   Press ENTER to continue.

   NOTE

   Use CONFIG-STORE to program the number of readings to store.

10. Press ENTER to begin scanning at the following prompt:

    Press ENTER to begin
    0010 scans of 10 channels

11. The instrument will then scan using selected scanning parameters. If you elected to store data in memory, the instrument will display the reading number on the bottom line of the display as readings are stored.
12. After readings are stored, the following will be displayed:

    SCAN COMPLETE
    RECALL-DATA SCAN-AGAIN EXIT

13. Select the desired operation, then press ENTER.

3.4.5 Using EXIT to stop scanning

To disable scanning while in progress, press the EXIT key.

3.4.6 Manual scanning

The ◀ and ▶ keys can be used to manually scan through channels. In order to use this feature, first close a channel using the CHAN key. Use ▶ to increment channels, or use ◀ to decrement channels. To view adjacent channels simultaneously, turn on the multiple displays with the NEXT key.

3.5 IEEE-488 bus scanner commands

Table 3-1 summarizes commands that are typically used for scanning and temperature measurements over the IEEE-488 bus. Note that the query form for most of the listed commands is not included. For more information on these and other bus commands, refer to the Model 2001 or 2002 User's Manual.

Programming examples in paragraphs 3.6, 3.7, and 3.8.4 are provided using both HP BASIC and QuickBASIC 4.5 languages. The QuickBASIC examples use the HP-style Universal Language Driver (CECHP).

Table 3-1
Summary of SCPI commands (Models 2001 and 2002)

Command	**Description**
FORMat command summary	
:FORMat	Command to specify data elements to send over the bus:
:ELEMents <item list>	Specify data elements (READing, CHANnel, RNUMber, UNITs, TIMEstamp, STATus).
ROUTe command summary	
:ROUTe	Commands to control 2001-TCSCAN:
:CLOSe <list>	Close specified channels.
:STATe?	Query closed channels.
:CLOSe? <list>	Query specified channels (1=closed, 0=open).
:OPEN <list>|ALL	Open specified channels or all channels.
:ALL	Open all channels.
:OPEN? <list>	Query specified channels (1=open, 0=closed).
:SCAN	Path to scan channels.
[:INTernal] <list>	Configure internal scan list.
:FUNCtion <list>, <function>	Assign function to specified channels (see NOTE at end of table).
:LSELect <name>	Select scan list (INTernal, NONE).
SENSe command summary	
[:SENSe[1]]	Commands to configure measurements:
:FUNCtion <name>	Select function (‘TEMPerature’, ‘VOLTage:AC’, ‘VOLTage:DC’, ‘RESistance’, ‘FRESistance’, ‘FREQuency’).
:ALTernate [1]	Program alternate function.
:SAVe	Save alternate function.
:RECall	Recall alternate function.
:TEMPerature	Path to configure temperature measurements:
:TRANsducer <name>	Select transducer (RTD, FRTD, or TCouple).
:RTD	Configure RTD temperature measurements:
:TYPE <name>	Select RTD sensor type (PT100, D100, F100, PT3916, PT385 or USER).
:RZERo <NRf>	Specify constant for USER type (0 to 1000).
:ALPHa <NRf>	Specify constant for USER type (0 to 0.01).
:BETA <NRf>	Specify constant for USER type (0 to 1.00).
:DELTa <NRf>	Specify constant for USER type (0 to 5.00).
:TCouple	Configure thermocouple sensor.
:TYPE <name>	Select thermocouple type (J,K,T,E,R,S, or B).
:RJUNctionX	Configure reference junction; where X=1 for Model 2001-TCSCAN.
:RSELect <name>	Select reference type (SIMulated or REAL).
:SIMulated <n>	Specify simulated temperature in˚C (0 to 50).
:REAL	Configure real reference junction:
:TCOefficient <n>	Specify temp coefficient (-0.09999 to 0.09999).
:OFFSet <n>	Specify voltage coefficient at 0˚C (-0.09999 to 0.09999).
:ACQuire	Update reference temperature.

Table 3-1 cont.
Summary of SCPI commands (Models 2001 and 2002)

Command	Description
TRACe command summary	
:TRACe	Commands to configure buffer:
:POINts <n>	Specify buffer size.
:AUTO <b>	Enable or disable auto buffer sizing (uses :trigger:count).
:FEED <name>	Select source of readings (SENSe[1], CALCulate [1], NONE).
:CONTrol <name>	Select buffer control mode (NEVer, NEXT, ALWays).
:DATA?	Read all readings in the buffer.
Trigger command summary	
:INITiate	Initiation commands:
[:IMMediate]	Initiate one trigger cycle.
:CONTinuous <b>	Enable or disable continuous initiation.
:TRIGger	Trigger layer commands:
:COUNt <n>	Specify total number of channels to scan (1 to 99999).
:SOURce <name>	Select control source (IMMediate, TIMer, MANual).
:TIMer <n>	Set timer interval (0 to 999999.999 seconds).
UNITs command summary	
:UNIT	Command to select temperature units:
:TEMPerature <name>	Select temperature measurement units (C, CEL, F, FAR, K).

NOTE: The SCAN:INTernal <function> parameter (ROUTe command summary) is one of the following:

VOLTage:DC	DC volts
VOLTage:AC	AC volts
TEMPerature	Temperature
FREQuency	Frequency
RESistance	2-wire ohms
FRESistance	4-wire ohms
RJUNctionX	Reference junction (X = 1 to 5)
NONE	No function (skips listed channel during scan).
ALTernate[1]	Alternate function.

3.6 Closing and opening channels

Individual scanner card channels are closed and opened using the CHAN key. The following paragraphs discuss closing and opening channels from the front panel as well as with bus commands.

3.6.1 Closing channels

■ **Front panel**

Use the front panel CHAN key to close specific channels as follows:

1. From normal display, press the CHAN key. The instrument will display the following menu:

   CHANNEL SELECTION
   CLOSE-CHANNEL   OPEN-ALL-CHANNELS

2. Select CLOSE-CHANNEL, then press ENTER. The Model 2001 will display the following prompt:

   ENTER CHANNEL# 01 (1-10)

3. Use the cursor and range keys to select the channel you wish to close (1-10), then press ENTER. Any previously closed channel will open, and the selected channel will close.

NOTE

Once a channel is closed, use the ◀ or ▶ key to manually scan through channels. Also, you can use the NEXT display to view three successive channels simultaneously.

■ **IEEE-488 bus**

Use the :ROUT:CLOSE command to close the desired channel. For example, either of the following program statements could be used to close channel 3.

HP BASIC
OUTPUT 716; ":rout:close (@3)"

QuickBASIC 4.5
PRINT #1, "output 16; :rout:close (@3)"

3.6.2 Opening channels

■ **Front panel**

Use the front panel CHAN key to open any closed channels as follows:

1. Press the CHAN key. The instrument will display the following menu:

   CHANNEL SELECTION
   CLOSE-CHANNEL   OPEN-ALL-CHANNELS

2. Select OPEN-ALL-CHANNELS, then press ENTER. The closed channel will open immediately.

■ **IEEE-488 bus**

Use the :ROUT:OPEN command to open the closed channel. For example, either of the following program statements could be used to open channel 3:

HP BASIC
OUTPUT 716; ":rout:open (@3)"

QuickBASIC 4.5
PRINT #1, "output 16; :rout:open (@3)"

(You can also use :ROUT:OPEN:ALL or :ROUT:OPEN ALL to open channels.)

3.7 Scanning channels

Channels are scanned by configuring channels and programming the Model 2001/2002 to perform a scan. The following paragraphs outline step-by-step procedures for performing basic scanning from the front panel and over the IEEE-488 bus.

3.7.1 Front panel scanning

Step 1: Configure channels

Use CONFIG-CHAN to select the measurement functions for each of the scanner channels as follows:

1. Press CONFIG-CHAN. The instrument will display the following menu:

   CONFIGURE CHANNELS
   INTERNAL-CHANS   EXTERNAL-INPUTS

2. Select INTERNAL-CHANS, then press ENTER. The multimeter will display the following menu:

   SET INTERNAL CHANS
   1=DCV 2=DCV 3=DCV 4=DCV 5=DCV ▶

3. Using the cursor keys, select the desired channel (press the right cursor key to display channels 6 through 10).
4. Using the range keys, select the desired measurement function: DCV, ACV, Ω2W, Ω4W, FRQ, TMP, JN1-JN5, ALT, --- (None).
5. Repeat steps 3 and 4 for each of the channels you wish to scan. NOTE: Select --- (none) to omit a channel from the scan list.
6. After selecting all measurement functions, press ENTER.
7. Press EXIT to return to normal display.

Step 2: Configure and start scan

Configure the scan as follows:

1. Press CONFIG-SCAN. The Model 2001/2002 will display the following:

   SCAN OPERATION
   INTERNAL EXTERNAL RATIO DELTA

2. Select INTERNAL, then press ENTER.
3. Press SCAN, and follow the prompts to configure scanning. See paragraph 3.4.4 for details.

3.7.2 IEEE-488 bus scanning

Step 1: Program channel functions

Use :ROUT:SCAN:INT:FUNC to program functions for the selected channels. For example, assume that you want to measure DC volts on channel 2, AC volts on channel 3, and 2-wire resistance on channel 6. The commands are as follows:

HP BASIC

```
OUTPUT 716; “:rout:scan:int:func (@2), ‘volt:dc’”
OUTPUT 716; “:rout:scan:int:func (@3), ‘volt:ac’”
OUTPUT 716; “:rout:scan:int:func (@6), ‘res’”
```

QuickBASIC 4.5

```
PRINT #1, “output 16; :rout:scan:int:func (@2), ‘volt:dc’”
PRINT #1, “output 16; :rout:scan:int:func (@3), ‘volt:ac’”
PRINT #1, “output 16; :rout:scan:int:func (@6), ‘res’”
```

If you wish to use the same function (for example DCV) on all three channels, either of the following commands can be used:

HP BASIC

```
OUTPUT 716; “:rout:scan:int:func (@2,3,6), ‘volt:dc’”
```

QuickBASIC 4.5

```
PRINT #1, “output 16; :rout:scan: int:func (@2,3,6),volt:dc’”
```

Step 2: Program internal scan list and start scan

Use the :ROUT:SCAN:INT command to program a scan list (channels you wish to scan). For example, assume that you wish to scan channels 2, 3, and 6. This scan list can be programmed using either of the following commands:

HP BASIC

```
OUTPUT 716; “:rout:scan:int (@ 2,3,6)”
```

QuickBASIC 4.5

```
PRINT #1, “output 16; :rout:scan:int (@2,3,6)”
```

Scanning will begin immediately when this command is sent. To disable scanning, send the :ROUT:SCAN:LSEL NONE command:

HP BASIC

```
OUTPUT 716; “:rout:scan:lsel none”
```

QuickBASIC 4.5

```
PRINT #1, “output 16; :rout:scan:lsel none”
```

3.8 Temperature measurements

The following paragraphs discuss using the Model 2001-TCSCAN for making temperature measurements using thermocouples and RTD probes.

3.8.1 Thermocouple temperature measurements

The Model 2001-TCSCAN can be used to make temperature measurements with the following thermocouple types: J, K, T, E, R, S, B. Measurements can be made either by automatic scanning, or by manually closing specific channels. The following paragraphs outline the procedures for making thermocouple temperature measurements using both of these methods. For more detailed information on temperature measurements in general, refer to the Model 2001/2002 Operator's manual.

■ Thermocouple scanning

Follow the steps below to automatically scan through thermocouples and make temperature measurements.

Step 1: Connect thermocouples

Connect your thermocouples to the scanner input connectors using the general scheme shown in Figure 2-5 in Section 2.

Step 2: Select thermocouple type and reference junction parameters

1. From normal display, press CONFIG-TEMP. The instrument will display the following:

```
CONFIG TEMPERATURE
SENSOR  UNITS  SPEED  FILTER  RESLN
```

2. Select SENSOR, then press ENTER. The following will be displayed:

```
TEMP SENSOR TYPE
4-WIRE-RTD  RTD  THERMOCOUPLE
```

3. Select THERMOCOUPLE, then press ENTER. The Model 2001 will then display the thermocouple setup menu:

```
THERMOCOUPLE SETUP
THERMOCOUPLE-TYPE  REF-JUNCTIONS
```

4. Choose THERMOCOUPLE-TYPE, then press ENTER. The list of supported thermocouple types will be displayed:

```
THERMOCOUPLE TYPE
J K T E R S B
```

5. Select the thermocouple type to match those you are using, then press ENTER. Select REF-JUNCTIONS on the displayed menu, then press ENTER. The Model 2001 will display the following:

```
CONFIGURE REFJCNS
JCN1  JCN2  JCN3  JCN4  JCN5
```

6. Select the desired reference junction (for example, JCN1), then press ENTER. The instrument will display the following message:

```
REFERENCE JUNCTION#1
CONFIGURE  ACQUIRE-REF-TEMP
```

7. Select CONFIGURE, then press ENTER. The following will be displayed:

```
CONFIGURE REFJCN#1
SIMULATED-TEMP  REAL-JUNCTION
```

8. Select REAL-JUNCTION, then press ENTER. The instrument will prompt you to enter the reference junction coefficient:

```
REFJCN#1=+00.20mV/°C
```

9. If necessary, set the displayed value to +200µV/°C (+0.20mV/°C), then press ENTER. The unit will then prompt you for the reference offset:

```
OFFSET1=+54.63mV@0°C
```

10. If necessary, set the offset to +54.63mV @ 0°C, then press ENTER.
11. Press EXIT as necessary to return to the CONFIG TEMPERATURE menu, then select your UNITS, SPEED, FILTER, and RESLN, as required.
12. Press EXIT to return to normal display.

Step 3: Configure channels

1. Press CONFIG-CHAN, select INTERNAL-CHANS, then press ENTER. The display will appear as follows:

   SET INTERNAL CHANS
   1=DCV 2=DCV 3= DCV 4=DCV 5=DCV ▶

2. Using the range and cursor keys, set the channel functions as follows:

   Channel 1: JN1 (or JN2-JN5 if using those junctions)

   Channels 2-10: TMP for thermocouple channels, --- for unused channels, or other valid function if used.

3. After setting all channel functions, press ENTER to return to normal display.

Step 4: Configure and scan channels

1. From normal display, press CONFIG-SCAN. The instrument will display the following:

   SCAN OPERATION
   INTERNAL EXTERNAL RATIO DELTA

2. Select INTERNAL, then press ENTER.
3. Press SCAN, then follow the prompts to begin scanning. See paragraph 3.4.4 for details.

■ Manual temperature measurements

In addition to scanning through channels to make temperature measurements, you can also make such measurements manually. In order to do so, you must first acquire the reference junction temperature and then manually close or scan through thermocouple channels. Note that the reference junction acquisition process should be repeated often, particularly if the ambient temperature changes; otherwise, temperature reading accuracy will be reduced.

NOTE

If you attempt to measure thermocouple temperature before acquiring the reference junction, the front panel “ERR” annunciator will indicate that an error has occurred.

Step 1: Connect Thermocouples

Connect your thermocouples to the desired channels, as covered in Figure 2-5, Section 2.

Step 2: Acquire reference junction temperature

1. Press the TEMP key to place the instrument in the temperature measurement mode.
2. Press CHAN. The unit will display the following:

   CHANNEL SELECTION
   CLOSE-CHANNEL OPEN-ALL-CHANNELS

3. Select CLOSE-CHANNEL, then press ENTER. The display will appear as follows:

   ENTER CHAN#01 (1-10)

4. If necessary, use the range and cursor keys to select channel 1 (reference junction channel), then press ENTER. The unit will return to normal display, and it should indicate that channel 1 is closed.
5. Press CONFIG-TEMP. The Model 2001/2002 will display the following message:

   CONFIG TEMPERATURE
   SENSOR UNITS SPEED FILTER RESOLN

6. Choose SENSOR, then press ENTER. The unit will display the sensor type menu:

   TEMP SENSOR TYPE
   4-WIRE-RTD RTD THERMOCOUPLE

7. Select THERMOCOUPLE, then press ENTER. The thermocouple setup menu will be displayed:

   THERMOCOUPLE SETUP
   THERMOCOUPLE-TYPE REF-JUNCTIONS

8. Select THERMOCOUPLE-TYPE, then press ENTER. Select your thermocouple type as outlined above. Select REF-JUNCTIONS, then press ENTER. The following will be displayed:

   CONFIGURE REFJCNS
   JCN1 JCN2 JCN3 JCN4 JCN5

9. Choose JCN1, then press ENTER. The selection menu below will be displayed:

   REFERENCE JUNCTION#1
   CONFIGURE ACQUIRE-REF-TEMP

10. Select ACQUIRE-REF-TEMP, then press ENTER. The reference junction temperature has now been acquired.
11. Press EXIT as necessary to return to the CONFIG TEMPERATURE menu, then select the UNITS, SPEED, FILTER, and RESLN, as required.
12. Press EXIT to return to normal display after completing temperature configuration.

Step 3: Close channels and display temperature

Close the desired channel (2-10) to display the temperature for that channel. Use the CHAN key and CLOSE-CHANNEL menu selection to close a specific channel. Once a channel is closed, you can manually scan through channels using the ◀ and ▶ keys. Keep in mind that the reference junction temperature should be acquired often to assure measurement accuracy, especially if the ambient temperature changes. Remember that the TEMP function must be selected, and channel 1 must be closed to acquire the reference junction temperature.

3.8.2 RTD temperature measurements

The following paragraphs outline the procedures for making temperature measurements from the front panel using the scanner. For more detailed information on temperature measurements in general, refer to the Model 2001/2002 Operator’s manual.

Step 1: Connect RTD probes

Connect RTD probes to the scanner using the basic resistance connections outlined in Section 2. For 4-wire probes, pair the connections as follows:

- Channels 2 and 7: probe #1
- Channels 3 and 8: probe #2
- Channels 4 and 9: probe #3
- Channels 5 and 10: probe #4

Do not use channels 5 and 10 for 2-wire probes because of the higher path resistance of these channels.

Step 2: Select sensor type and units

1. From normal display, press CONFIG-TEMP. The instrument will display the following:

   CONFIG TEMPERATURE
   SENSOR UNITS SPEED FILTER RESLN

2. Select SENSOR, then press ENTER. The following will be displayed:

   TEMP SENSOR TYPE
   RTD 4-WIRE-RTD THERMOCOUPLE

3. Select RTD or 4-WIRE-RTD as appropriate for the sensor type you are using, then press ENTER. The instrument will display the following:

   SET RTD TYPE
   PT385 PT3916 USER-RTD

4. Select the RTD type from among the displayed types, then press ENTER.
5. Select UNITS, then press ENTER. The unit will display the following selections:

   SET TEMP UNITS
   DEG-C DEG-F K

6. Choose the type of temperature units you desire to use: °C, °F, or K, then press ENTER.
7. Before exiting the temperature configuration menu, select speed, filter, and resolution operating modes, if desired.
8. Press EXIT to return to normal display.

Step 3: Configure channels

1. Press CONFIG-CHAN. The instrument will display the following:

   CONFIGURE CHANNELS
   INTERNAL-CHANS EXTERNAL-INPUTS

2. Select INTERNAL-CHANS. The Model 2001/2002 will display the following:

```
SET INTERNAL CHANS
1=DCV   2=DCV   3=DCV   4=DCV   5=DCV ▶
```

3. Use the cursor and range keys to select channels and functions. Set the function type to TMP for all channels connected to RTD probes. Select --- (none) for channels with no connections.
4. Press ENTER to return to normal display.

Step 4: Configure scan and scan channels

1. From normal display, press CONFIG-SCAN. The instrument will display the following:

```
SCAN OPERATION
INTERNAL   EXTERNAL   RATIO   DELTA
```

2. Select INTERNAL, then press ENTER.
3. Press SCAN, then follow the prompts. See paragraph 3.4.4 for details.

3.8.3 Using RTD and thermocouple sensors together

RTD and thermocouple sensors can be used together with the scanner. To do so, setup the TMP function for one type of temperature sensor, and configure the ALT function for the other type of temperature sensor. In the example below, the thermocouple sensor type is assigned to the TMP function, and the RTD temperature sensor is assigned to the ALT function.

Step 1: Connect temperature sensors

Connect your RTD probes and thermocouples to the scanner input connectors using the general scheme shown in Section 2. Be sure to use the appropriate 2-wire or 4-wire connections for the RTD probes. (Do not use channels 5 and 10 for 2-wire probes because of the higher path resistance of these two channels.)

Step 2: Assign RTD sensor type to the ALT function

1. From normal display, press CONFIG-TEMP. The model will display the following:

```
CONFIG TEMPERATURE
SENSOR   UNITS   SPEED   FILTER   RESLN
```

2. Select SENSOR, then press ENTER. The unit will display the following:

```
TEMP SENSOR TYPE
4-WIRE-RTD   RTD   THERMOCOUPLE
```

3. Select 4-WIRE-RTD or RTD as appropriate, then press ENTER. The instrument will then prompt for RTD type:

```
SET RTD TYPE
PT385   PT3916   USER-RTD
```

4. Choose the appropriate RTD type, then press ENTER.
5. Choose the desired UNITS, SPEED, FILTER, and RESLN for the RTD measurements.
6. Press EXIT to return to normal display.
7. Press TEMP to select the temperature function.
8. Press CONFIG-CHAN. The Model 2001/2002 will display the following:

```
CONFIGURE CHANNELS
INTERNAL-CHANS   EXTERNAL-INPUTS ▶
◀ SAVE-ALT-FCN   RESTORE-ALT-FCN
```

9. Select SAVE-ALT-FCN, then press ENTER. The unit will inform you that the temperature function has been saved as the alternate function:

```
TMP settings saved
as the ALT function
```

10. Press EXIT to return to normal display.

Step 3: Select thermocouple type and reference junction parameters

1. From normal display, press CONFIG-TEMP. The instrument will display the following:

```
CONFIG TEMPERATURE
SENSOR   UNITS   SPEED   FILTER   RESLN
```

2. Select SENSOR, then press ENTER. The unit will display the following:

```
TEMP SENSOR TYPE
4-WIRE-RTD   RTD   THERMOCOUPLE
```

3. Select THERMOCOUPLE, then press ENTER. The Model 2001/2002 will then display the thermocouple setup menu:

```
THERMOCOUPLE SETUP
THERMOCOUPLE-TYPE   REF-JUNCTIONS
```

4. Choose THERMOCOUPLE-TYPE, then press ENTER. The list of supported thermocouple types will be displayed:

```
THERMOCOUPLE TYPE
J  K  T  E  R  S  B
```

5. Select the thermocouple type to match those you are using, then press ENTER. Select REF-JUNCTIONS on the displayed menu, then press ENTER. The Model 2001/2002 will display the following:

```
CONFIGURE REFJCNS
JCN1   JCN2   JCN3   JCN4   JCN5
```

6. Select the desired reference junction (for example, JCN1), then press ENTER. The instrument will display the following message:

```
REFERENCE JUNCTION#1
CONFIGURE   ACQUIRE-REF-TEMP
```

7. Select CONFIGURE, then press ENTER. The following will be displayed:

```
CONFIGURE REFJCN1
SIMULATED-TEMP   REAL-JUNCTION
```

8. Select REAL-JUNCTION, then press ENTER. The instrument will prompt you to enter the reference junction coefficient:

```
REFJCN#1=+00.20mV/°C
```

9. If necessary, set the displayed value to +200µV/°C (+0.20mV/°C), then press ENTER. The unit will then prompt you for the reference offset:

```
REFJCN#1=+54.63mV@°C
```

10. If necessary, set the offset to +54.63mV @ 0°C, then press ENTER.
11. Press EXIT as necessary to return to the CONFIG TEMPERATURE menu, then select your UNITS, SPEED, FILTER, and RESLN, as required.
12. Press EXIT to return to normal display.

Step 4: Configure channels

1. Press CONFIG-CHAN. The display will appear as follows:

```
SCAN OPERATION
1=DCV   2=DCV   3-DCV   4=DCV   5=DCV ▶
```

2. Using the range and cursor keys, set the channel functions as follows:

   Channel 1: JCN1 (or JCN2-JCN5 if using those junctions)

   Channels 2-10: TMP for thermocouple channels, ALT for RTD channels, --- for unused channels, or other valid function if used.

3. After setting all channel functions, press ENTER to return to normal display.

Step 5: Configure and scan channels

1. From normal display, press CONFIG-SCAN. The instrument will display the following:

```
SCAN OPERATION
INTERNAL   EXTERNAL   RATIO   DELTA
```

2. Select INTERNAL, then press ENTER.
3. Press SCAN, then follow the prompts to begin scanning. See paragraph 3.4.4 for details.

3.8.4 IEEE-488 programming example (temperature measurements)

A programming example to scan channels is provided to demonstrate how to perform temperature measurements using the Model 2001-TCSCAN card.

The program is written in Microsoft QuickBASIC 4.5 using the Keithley KPC-488.2 (or Capital Equipment Corporation) IEEE interface and the HP-style Universal Language Driver (CECHP). Note that before the program can be run, the Universal Language Driver must first be installed. To install the driver, enter cechp at the DOS prompt.

If the CECHP command is in your AUTOEXEC.BAT file, the driver will automatically be installed each time you turn on your computer.

■ Open drivers and set terminator

The following program statements are required at the beginning of the program. They open the driver files and set the input terminator for CRLF.

```
OPEN “ieee” FOR OUTPUT AS #1
OPEN “ieee” FOR INPUT AS #2
PRINT #1, “interm crlf”
```

■ Configure temperature measurements

After opening the drivers and setting the terminator, add the following program statements to configure the Model 2001/2002 to make Type K thermocouple temperature measurements:

```
                                                ‘Comments
PRINT #1, “output 16; *rst”                         ‘1
PRINT #1, “output 16; func  ‘temp’”                 ‘2
PRINT #1, “output 16; temp:tran  tc”                ‘3
PRINT #1, “output 16; temp:tc:type  k”              ‘4
PRINT #1, “output 16; unit:temp  f”                 ‘5

PRINT #1, “output 16; temp:rjun:rsel  real”         ‘6
PRINT #1, “output 16; rout:scan:func                ‘7
            (@1), ‘rjun1’”
PRINT #1, “output 16; rout:scan:func                ‘8
            (@2:6), ‘temp’”

PRINT #1, “output 16; rout:clos  (@1)”              ‘9
PRINT #1, “output 16; temp:rjun1:acq”               ‘10
PRINT #1, “output 16; rout:open:all”                ‘11
```

‘Comments	
1	Returns the instrument to the *RST default conditions.
2	Selects the TEMP function.
3 through 5	Configures instrument for type K thermocouple temperature measurements using ˚F units.
6	Selects the REAL reference junction type. The *RST command (line 1) sets the real reference junction coefficient to 0.20m V/˚C and sets the reference offest to 54.63mV @0˚C.
7 and 8	Selects channel 1 for the reference junction and channels 2 through 6 for temperature measurements.
9 through 11	Acquires the reference junction temperature (channel 1).

■ Configure and perform automatic scanning

Add the following statements to the program to configure and perform two scans of five channels (2 through 6):

```
                                                ‘Comments
PRINT #1, “output 16; trig:coun  10”            ‘12
PRINT #1, “output 16; trig:sour  tim”           ‘13
PRINT #1, “output 16; trig:tim  0.5”            ‘14

PRINT #1, “output 16; rout:scan  (@2:6)”        ‘15
PRINT #1, “output 16; rout:scan:lsel  int”      ‘16

PRINT #1, “output 16; trac:poin:auto  on”       ‘17
PRINT #1, “output 16; trac:feed  sens”          ‘18
PRINT #1, “output 16; trac:feed:cont  next”     ‘19
PRINT #1, “output 16; form:elem  read,          ‘20
           chan, unit”

PRINT #1, “output 16; init”                     ‘21
PRINT #1, “output 16; trac:data?”               ‘22
PRINT #1, “enter 16”                            ‘23
LINE INPUT #2, A$                               ‘24
PRINT A$                                        ‘25
END
```

‘Comments

12	Sets trigger count to 10 (two scans of five channels).
13 and 14	Selects Timer and sets it for 0.5 seconds. This is the delay period between scanned channels.
15	Configures the scan list for channels 1 through 6.
16	Selects internal scanning.
17 through 19	Configures buffer to store 10 temperature readings.
20	Includes channel number and temperature units with readings over the bus.
21	Starts scanning operation.
22 through 25	After the two scans are finished, the 10 temperature readings are sent to the computer where they are displayed.

■ Open and close channels

Manual scanning can be performed by using the following programming statements to open and close channels. The following statements assume that the previous scanning program has been run. Remember that the timer was set to 0.5 seconds. Therefore, once a temperature measurement channel is closed, the temperature readings will update at that rate.

NOTE

The reference junction temperature (channel 1) needs to be acquired often to assure accurate temperature measurements.

```
                                            'Comments
PRINT #1, "output 16; init:cont on"          '1
PRINT #1, "output 16; :rout:clos (@1)"       '2
PRINT #1, "output 16; temp:rjun1:acq"        '3
PRINT #1, "output 16; :rout:clos (@ 3)"      '4
PRINT #1, "output 16; :rout:open:all"        '5
```

‘Comments

1	Enables continuous initiation.
2 and 3	Closes channel 1 and acquires the reference junction temperature.
4	Opens channel 1 and closes channel 3. The temperature reading for channel 3 is displayed.
5	Opens channel 3.

3.9 Basic front panel operation

Paragraphs 3.9 through 3.11 provide information on scanner card operation using the Models 2000 and 2010 DMMs. Models 2001 and 2002 DMM operation is covered in paragraph 3.4 through 3.8

Figure 3-2 shows the front panel of the Models 2000 and 2010. Controls that affect Model 2001-TCSCAN operation include:

- ◀ and ▶ — Lets you manually step through consecutive internal card channels.
- OPEN and CLOSE — Lets you selectively open and close internal card channels.
- SHIFT-CONFIG — Use to configure stepping/scanning.
- STEP — Starts a stepping operation of consecutive channels, where the output triggers are sent after every channel closure.
- SCAN — Starts a scanning operation of consecutive channels, where an output trigger is sent at the end of the scan list.
- SHIFT-HALT — Stops stepping or scanning and restores the trigger model to a non-scanning mode.

3.9.1 Configure stepping and scanning

The SHIFT-CONFIG key combination lets you:

- Select the step/scan type (internal or external).
- Set the step/scan list length by specifying the first and last channels in the step/scan.
- Specify the time period between stepped channels and scans.
- Specify the number of readings to store in the buffer (reading count).

Perform the following steps to configure stepping or scanning:

1. Press SHIFT and then CONFIG to access the step/scan configuration.
2. Select INTernal scan by using the ▲ and ▼ keys and pressing ENTER.

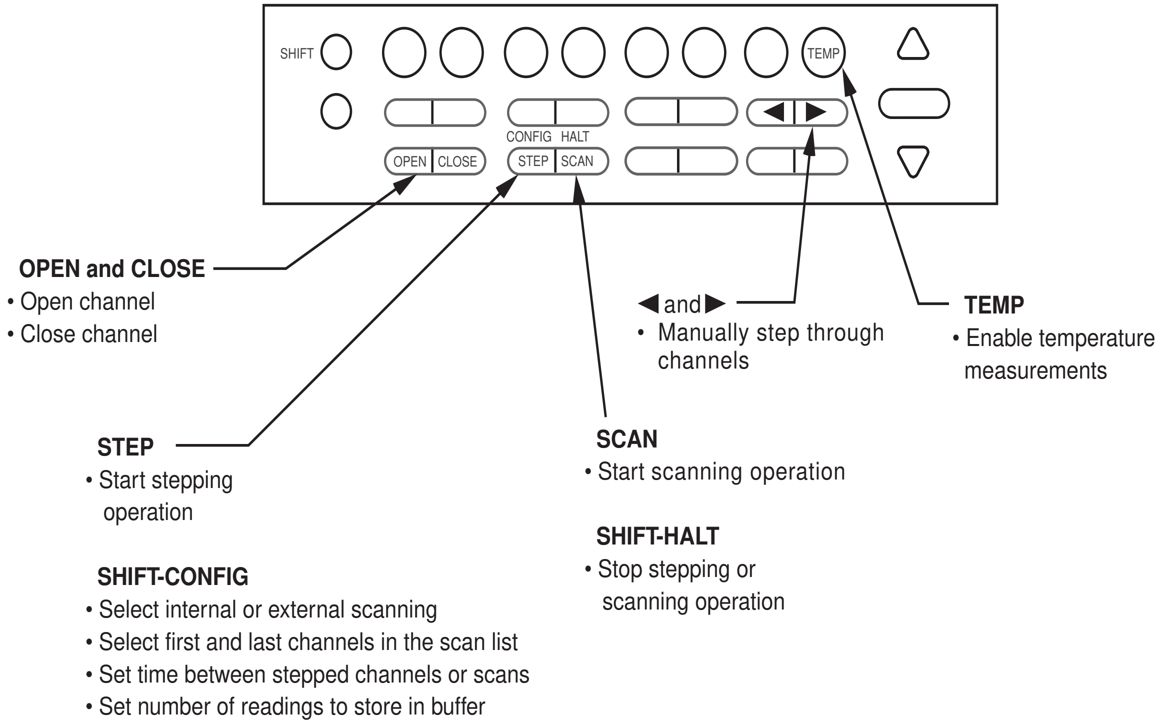
SHIFT
TEMP
CONFIG HALT
OPEN CLOSE
STEP SCAN
OPEN and CLOSE
• Open channel
• Close channel
◀ and ▶
• Manually step through channels
TEMP
• Enable temperature measurements
STEP
• Start stepping operation
SCAN
• Start scanning operation
SHIFT-HALT
• Stop stepping or scanning operation
SHIFT-CONFIG
• Select internal or external scanning
• Select first and last channels in the scan list
• Set time between stepped channels or scans
• Set number of readings to store in buffer

Figure 3-2
Models 2000 and 2010 front panel scanner controls

3. Set the step/scan list length:

   - Select the first channel in the step/scan list (MINimum CHANnel) by using the ▲ and ▼ keys and pressing ENTER.
   - Select the last channel in the step/scan list (MAXimum CHANnel) and press ENTER. Step/scan list length = (MAX CHAN - MIN CHAN) + 1.

4. The next selection configures the timer (this is the Timer control source in the trigger model). With the timer disabled (OFF), the time period between each stepped or scanned channel depends on how the trigger model Delay is configured.

   When stepping, the Timer determines the time period between stepped channels. Note that if the trigger model Delay period is larger than the Timer period, the Delay period will instead be in effect.

   When scanning, the Timer determines the time period between scans. It has no effect on the time period between each scanned channel. For example, assume that the instrument is configured to perform two scans and the Timer is set for 10 minutes. The first scan will start when the SCAN key is pressed. The second scan will start 10 minutes after the completion of the first scan. The time period between each scanned channel is determined by the trigger model Delay.

   After enabling the timer (ON), the Model 2000/2010 prompts for a time period:

   ```
   00H:00M:00.000S
   ```

   Use the ◄, ►, ▲, and ▼ keys to select a time period and press ENTER.

5. Next, you are prompted for a reading count (RDG CNT). The reading count determines how many channels are stepped/scanned and how many readings are stored in the buffer. This can be less than, equal to, or greater than the step/scan list length (up to 1024).

   - Stepping — The reading count specifies the number of channels stepped. For example, assume the step list length is 10 and the reading count is 15. After stepping through the 10 channels, the stepping process wraps back to the first channel and continues until channel 5 is stepped. The readings for the 15 stepped channels are stored in the buffer.
   - Scanning — The reading count determines the number of scans to be performed. If the reading count number is not a multiple of the scan list length, then an additional scan will be performed to accommodate the extra channel(s). For example, assume that the scan list length is 10 and the reading count is 25. Three scans will be performed to acquire the 25 readings. Even though 30 channels will be scanned, only 25 readings will be stored in the buffer.

6. Press ENTER to return to the normal display.

The present trigger model Delay setting may have an effect on time periods for stepping and scanning. When stepping, the trigger model Delay will be in effect if its time period is larger than the Timer period. Otherwise, the Timer determines the time delay between stepped channels. When scanning, the Delay determines the time period between scanned channels. Delay has no effect on the time between scans, which is determined by the Timer.

The trigger model Delay is set by pressing SHIFT and then DELAY. With AUTO Delay selected, the nominal delay period is only long enough to let the relays settle. With MANual Delay selected, you can manually specify the Delay (up to 99H:99M:99.999S).

3.9.2 Open and close channels

◄ and ► keys — These keys can be used to manually scan through channels on the internal scanner card. With a scanner card installed in the option slot, press the ► key to manually increment channels, or the ◄ key to manually decrement channels. The annunciator of the closed channel is lit. Hold down either key to manually scan through channels continuously. Press OPEN to open all channels. Remember that channel 1 is the reference junction.

OPEN and CLOSE keys — These keys also control channels on the internal scanner card. The keys let you directly:

- Close a specific channel (or channel pair for 4-wire configuration).
- Immediately open any closed channel (or channel pair for 4-wire configuration).

With a scanner card installed in the option slot, the following prompt is displayed when the close key is pressed:

```
CLOSE CHAN:01
```

Use the ◀ , ▶, ▲, and ▼ keys to display the desired channel (1 to 10) and press ENTER. The annunciator of the closed channel will be displayed on the front panel along with normal readings. Selecting a different channel from the one presently closed will cause the closed channel to open and allow a settling time before closing the selected channel. Remember that channel 1 is the reference junction.

Channel relays will be closed according to the presently selected function. If a 4-wire function is selected, both the selected channel relay and the matching pair relay will be closed. Valid 4-pole channel pairs are:

- 2 and 7
- 3 and 8
- 4 and 9
- 5 and 10

CAUTION

Do not use channel pair 1 and 6. Channel 1 is the temperature reference junction. Applying a signal to channel 6 could damage the reference junction.

Pressing OPEN will immediately open any closed scanner card channel or channel pair for a 4-wire function.

3.9.3 Start stepping or scanning

The STEP key is used to start the stepping process. When STEPping, an output trigger is sent after each channel is closed. Stepping will stop after the last reading count (RDG CNT) channel closes.

The SCAN key is used to start the scanning process. When SCANning, an output trigger is sent at the end of the scan list. Thus, if 3 scans are performed, 3 output triggers will occur. The specified reading count (RDG CNT) determines the number of scans performed. The instrument will perform enough scans to accommodate the specified reading count (RDG CNT). Scanning will stop after the last scan list channel (of the last scan) closes.

NOTE

When finished, press SHIFT and then HALT to exit from the STEP/SCAN mode.

3.10 Temperature measurements

The following paragraphs explain how to make temperature measurements from the front panel using the Model 2001-TCSCAN installed in the Model 2000/2010. Measurements can be made by either automatic stepping/scanning or by manually closing specific channels. Sensors that can be used for temperature measurements include:

- Model 2000: Thermocouples types - J, K, or T
- Model 2010: Thermocouple types - J, K, T, or N
  RTD types - PT100, USER, PT3916,
  PT385, F100, or D100

NOTE

The Model 2000 can only use thermocouples to make temperature measurements.

3.10.1 Temperature measurement configuration

Use the following menu structure to configure the Model 2000/2010 for temperature measurements.

Press SHIFT and then TEMP. The following choices are available using the ▲ and ▼ keys:

- UNITS — C, K, or F (Centigrade, Kelvin, Fahrenheit). Use to select the displayed units for temperature measurements.
- SENSOR (Model 2010 only) — TCOUPLE or 4W-RTD (sensor type). Use to select the sensor type for the Model 2010.
- TYPE — Use to specify the sensor that you are using:
  Model 2000 - J, K, or T (thermocouple type).
  Model 2010 - J, K, T, or N (thermocouple type) or PT100, USER, PT3916, PT385, F100 or D100 (4W-RTD type).
- JUNC — SIM or CH1 (simulated or referenced to channel 1). Select CH1 to reference measurements to the reference junction of the Model 2001-TCSCAN card.

3.10.2 Temperature measurement procedure

Perform the following steps to perform temperature measurements:

Step 1: Connect sensors

Thermocouples — Connect the thermocouples to the scanner input connectors using the scheme shown in Figure 2-5 in Section 2.

RTDs (Model 2010 only) — If using RTD probes, connect them to the scanner using the basic resistance connection schemes provided in Section 2. For 4-wire probes, pair the connections as follows:

- Channels 2 and 7: probe #1
- Channels 3 and 8: probe #2
- Channels 4 and 9: probe #3
- Channels 5 and 10: probe #4

Do not use channels 5 and 10 for 2-wire probes because of the higher path resistance of these channels.

Step 2: Configure temperature measurements

As previously explained (see “Temperature measurement configuration”), configure the Model 2000/2010 for temperature measurements.

Step 3: Configure stepping/scanning

As explained in paragraph 3.9, configure the Model 2000/2010 for internal stepping/scanning. From the SHIFT/CONFIG menu structure, you can also modify the step/scan list, specify the time between stepped channels and scans, and set the reading count.

Step 4: Step or scan channels

Manual stepping — Use the ◀ and ▶ keys to manually step through channels on the Model 2001-TCSCAN card. The OPEN and CLOSE keys can also be used to control channels. See “Open and close channels” in paragraph 3-9 for details on manually stepping through channels.

Automatic stepping/scanning — The STEP key is used to start automatic stepping, and the SCAN key is used to start automatic scanning. When STEPping, an output trigger is sent after each channel is closed. When SCANning, an output trigger is sent at the end of the scan list.

Step 5: Stop automatic stepping/scanning

When finished, exit from the stepping/scanning mode by pressing SHIFT and then HALT.

3.11 Remote operation

Tables 3-2 and 3-3 summarize commands typically used for scanning and temperature measurements over the IEEE-488 bus and the RS-232 Interface. The commands in Table 3-2 apply to both the Model 2000 and the Model 2010, while the additional commands for the TEMP function in Table 3-3 apply only to the Model 2010. For more detailed information on these and other bus commands, refer to the Model 2000 or 2010 User's Manual.

Table 3-2
Summary of SCPI commands (Models 2000 and 2010)

Command	**Description**
FORMat command summary	
:FORMat	Command to specify data elements to send over the bus.
:ELEMents <item list>	Specify data elements (READing, CHANnel, UNITs).
ROUTe command summary	
:ROUTe	Commands to control scanner card:
:CLOSe <list>	Close specified channel (or channel pair).
:STATe?	Query closed channel (or channel pair).
:OPEN:ALL	Open all channels.
:MULTiple	Path to close and open multiple channels:
:CLOSe <list>	Close specified channels.
:STATe?	Query closed channels.
:OPEN <list>	Open specified channels.
:SCAN	Path to scan channels.
[:INTernal] <list>	Configure internal scan list.
:LSELect <name>	Select scan list (INTernal, EXTernal, or NONE) and start scan.
SENSe command summary	
[SENSe[1]]	Sense subsystem.
:TEMPerature	Path to configure temperature measurements:
:TCouple	Configure thermocouple sensor:
:TYPE <name>	Select thermocouple type (J, K, T (also N for Model 2010)).
:RJUNction	Configure reference junction:
:RSELect <name>	Select reference type (SIMulated or REAL).
:SIMulated <n>	Specify simulated temperature in °C (0 to 50).
:REAL	Configure real reference junction:
:TCOefficient <n>	Specify temp coefficient (-0.09999 to 0.09999).
:OFFSet <n>	Specify voltage coefficient at 0°C (-0.09999 to 0.09999).
TRACe command summary	
:TRACe	Commands to configure buffer:
:POINts <NRf>	Specify buffer size (2 to 1024).
:FEED <name>	Select source of readings (SENSe[1], CALCulate[1], NONE).
:CONTrol <name>	Select buffer control mode (NEVer or NEXT).
:DATA?	Read all readings in buffer.
Trigger command summary	
:INITiate	Initiation commands:
[:IMMediate]	Initiate one trigger cycle.
:CONTinuous <b>	Enable or disable continuous initiation.
:TRIGger	Trigger layer commands:
:COUNt <n>	Specify total number of channels to scan (1 to 9999).
:DELay <n>	Set delay between scanned channels (0 to 999999.999 sec).
:AUTO <b>	Enable or disable auto delay.
:SOURce <name>	Select control source (IMMediate, TIMer, MANual, BUS, EXTernal).
:TIMer <n>	Set timer interval (0 to 999999.999 sec).
UNITs command summary	
:UNIT	Command to select temperature units:
:TEMPerature <name>	Select temperature measurement units (C, F, or K).

Table 3-3
Additional SCPI commands for the Model 2010

Command	Description
SENSe command summary:	
[:SENSe[1]]	
:TEMPerature	Commands to select transducer type and configure RTD temperature measurements:
:TRANsducer <name>	Select transducer type:
:FRTD	Configure RTD temperature measurements:
:TYPE <name>	Select RTD sensor type (PT100, D100, F100, PT3916, PT385, or USER).
:RZERo <NRf>	Specify constant for USER type (0 to 10000).
:ALPHa <NRf>	Specify constant for USER type (0 to 0.01).
:BETA <NRf>	Specify constant for USER type (0 to 1.00).
:DELTa <NRf>	Specify constant for USER type (0 to 5.00).

3.11.1 IEEE-488 programming example (temperature measurements)

The following programming example is provided to demonstrate how to perform temperature measurements using the Model 2001-TCSCAN card.

It is written in Microsoft QuickBASIC 4.5 using the Keithley KPC-488.2 (or Capital Equipment Corporation) IEEE interface and the HP-style Universal Language Driver (CECHP). Note that before the programming example can be run, the Universal Language Driver must first be installed. To install the driver from the DOS prompt, enter the cechp command.

If the CECHP command is in your AUTOEXEC.BAT file, the driver will automatically be installed each time you turn on your computer.

■ Open drivers and set terminator

The following program statements are required at the beginning of the program. They open the driver files and set the input terminator for CRLF.

```
OPEN “ieee” FOR OUTPUT AS #1
OPEN “ieee” FOR INPUT AS #2
PRINT #1, “interm crlf”
```

■ Configure temperature measurements

After opening the drivers and setting the terminator, add the following program statements to configure the Model 2000/2010 to make Type K thermocouple temperature measurements:

```
                                                  ‘Comments

PRINT #1, “output 02; *rst”                          ‘1
PRINT #1, “output 02; func  ‘temp’”                  ‘2
PRINT #1, “output 02; unit:temp  f”                  ‘3
PRINT #1, “output 02; temp:tc:type  k”               ‘4
PRINT #1, “output 02; temp:tc:rjun:rsel  real”       ‘5
```

‘Comments

1 Returns the instrument to the *RST default conditions. For the Model 2010, this command selects the thermocouple transducer type.

2 Selects the TEMP function.

3 Selects ˚F temperature measurement units.

4 Selects type K thermocouple.

5 Selects the REAL reference junction type. The *RST command (line 1) sets the real reference junction coefficient to 0.20mV/˚C

and sets the reference offset to 54.63mV @ 0°C.

■ Configure and perform automatic scanning

Remote scanning resembles front panel stepping rather than front panel scanning. For this reason, the front panel STEP annunciator is on for remote scanning.

- A trigger is output after every channel is scanned and measured.
- The time period between scanned channels can be set using the trigger model Timer or the trigger model Delay. When using the Timer, the larger of the time periods (Timer or Delay) is in effect for scanning.

Add the following statements to the program to configure and perform two scans of six channels.

NOTE

Channel 1 is included in the scan list because the reference junction temperature needs to be acquired to assure measurement accuracy for the temperature measurement channels (2 through 6).

```
                                                'Comments
PRINT #1, "output 02;  init:cont  off"          '6
PRINT #1, "output 02;  trig:coun  12"           '7
PRINT #1, "output 02;  trig:sour  tim"          '8
PRINT #1, "output 02;  trig:tim  0.5"           '9
PRINT #1, "output 02;  rout:scan  (@1:6)        '10
PRINT #1, "output 02;  rout:scan:lsel  int"     '11
PRINT #1, "output 02;  trac:poin  12"           '12
PRINT #1, "output 02;  trac:feed  sens"         '13
PRINT #1, "output 02;  trac:feed:cont  next"    '14
PRINT #1, "output 02;  form:elem  read,         '15
           chan, unit"
PRINT #1, "output 02;  init"                    '16
PRINT #1, "output 02;  trac:data?               '17
PRINT #1, "enter  02"                           '18
LINE INPUT #2,  A$                              '19
PRINT A$                                        '20
PRINT #1, "output 02;  rout:scan:lsel  none"    '21
PRINT #1, "output 02;  rout:open:all"           '22
END
```

'Comments

6	Disables continuous intiation.
7	Sets trigger count to 12 (2 scans of 6 channels).
8 and 9	Selects TIMER and sets it for 0.5 seconds. This is the delay period between scanned channels.
10	Configures the scan list for channels 1 through 6.
11	Selects internal scanning.
12 through 14	Configures buffer to store 12 temperature readings.
15	Includes channel number and temperature units with readings over the bus.
16	Starts scanning operation.
17 through 20	After the 2 scans are finished, the 12 temperature readings are sent to the computer where they are displayed.
21	Disables the scanning mode of operation.
22	Opens the last scanned channel (6).

■ Open and close channels

Manual scanning can be performed by using the :ROUTe:CLOSe/OPEN commands. The following programming statements used to measure temperature at channel 3 assume the instrument is already configured to make temperature measurements. The previous programming example configures the instrument to make type K thermocouple temperature measurements (°F).

NOTE

Channel 1 (reference junction) needs to be read often to ensure accurate temperature measurements.

```
                                                'Comments
PRINT #1, "output 02; :rout:clos (@1)"          '1
PRINT #1, "output 02; :rout:clos (@ 3)"         '2
PRINT #1, "output 02; :rout:open:all"           '3
```

'Comments

1	Closes channel 1 to acquire the reference junction temperature.
2	Opens channel 1 and closes channel 3. The temperature for channel 3 is displayed on the instrument.
3	Opens channel 3.

Note that when a four-wire function is selected (Ω4 or 4W-RTD for the Model 2010), closing a channel (1 through 5) will also close the paired channel. For example, if you close channel 2, channel 7 will also close.

CAUTION

With a 4-wire function selected, do not connect anything to channel 6. In the 4-pole mode, channel 1 (which is the reference junction) is paired with channel 6. Therefore, when channel 1 is closed, channel 6 also closes. Applying a signal to channel 6 could damage the reference junction.

The ROUTe:MULTiple:CLOSe/OPEN commands can also be used to control scanner card channels. As the name implies, you can specify multiple channels to be closed at the same time. Note that channel 11 is the 2-pole/4-pole relay (see Figure 2-1). Closing channel 11 selects the 2-pole operating mode. With channel 11 open, the 4-pole mode is selected.

CAUTION

When closing multiple channels, make sure that you do not inadvertently connect the reference junction (channel 1) to other channels. Applying a signal to a channel that is connected to channel 1 could damage the reference junction.

3.12 Typical applications

NOTE

The information in the following paragraphs pertains to the Models 2000, 2001, 2002, and 2010.

3.12.1 Resistor testing

The Model 2001-TCSCAN can be used to test up to seven resistors using 2-wire measurements, or up to four resistors using 4-wire measurements. Such tests use the Model 2001 Ω2 and Ω4 resistance functions.

■ 2-wire resistance tests

Figure 3-3 shows a typical test setup for making 2-wire resistance measurements. The Model 2001-TCSCAN card provides the switching function, while the resistance measurements are made by a DMM. Since only 2-pole switching is required for this application, one Model 2001-TCSCAN card can be used to switch up to seven resistors. Note, however, that the 240Ω on resistance of channels 5 and 10 may affect the measurement accuracy of 2-wire resistance measurements made using these channels. Generally, channels 5 and 10 should not be used for 2-wire resistance measurements unless the card is modified. (See paragraph 4.8 in Section 4.)

Measurement accuracy can be optimized by minimizing residual resistance: make connecting wires as short as possible, and limit the number of connectors to minimize path resistance. Another technique is to short one of the scanner channel inputs, close the shorted channel, and then enable the multimeter REL feature to null out path resistance. Leave REL enabled for the entire test.

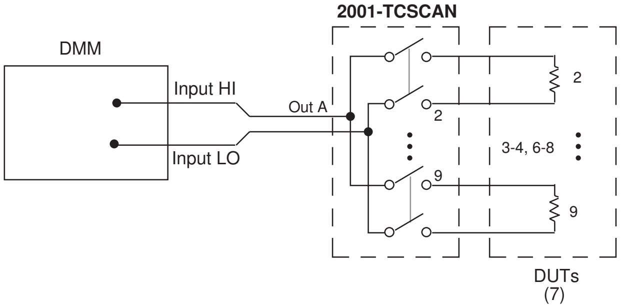

A. Test Configuration

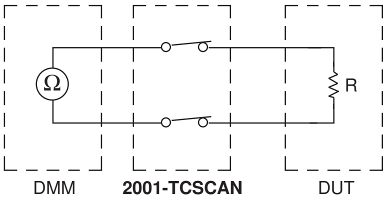

B. Simplified Equivalent Circuit

Figure 3-3
2-wire resistance test connections

4-wire resistance tests

More precise measurements over a wider range of system and DUT conditions can be obtained by using the 4-wire measurement scheme shown in Figure 3-4. Here, separate sense leads from the DMM are routed through the scanner to the resistor under test. The extra set of sense leads minimizes the effects of voltage drops across the test leads, greatly reducing measurement errors with lower DUT resistances. Note, however, that an extra two poles of switching are required for each resistor tested. For this reason, only four resistors can be tested using this configuration.

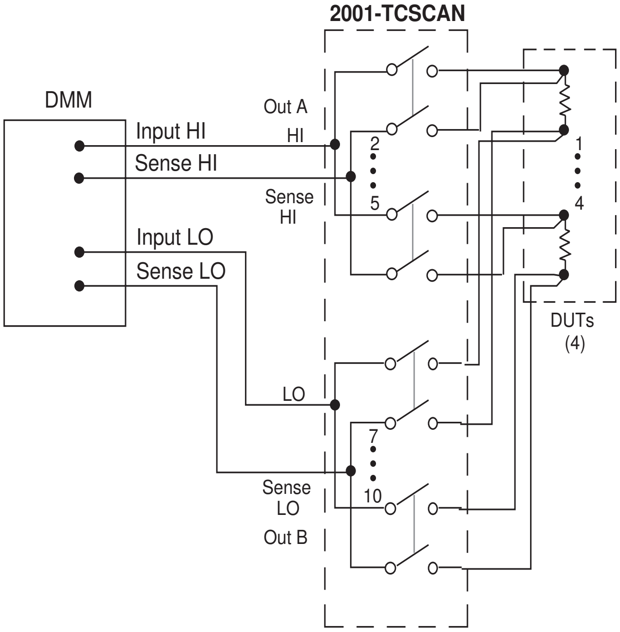
2001-TCSCAN
DMM
Input HI
Sense HI
Input LO
Sense LO
Out A
HI
Sense
HI
LO
Sense
LO
Out B
2
5
7
10
1
4
DUTs
(4)

A. Test Configuration

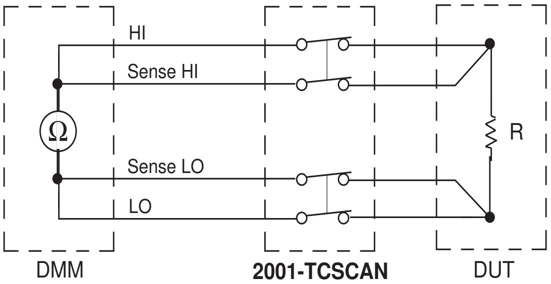
HI
Sense HI
Ω
Sense LO
LO
R
DMM
2001-TCSCAN
DUT

B. Simplified Equivalent Circuit

Figure 3-4
4-wire resistance test connections

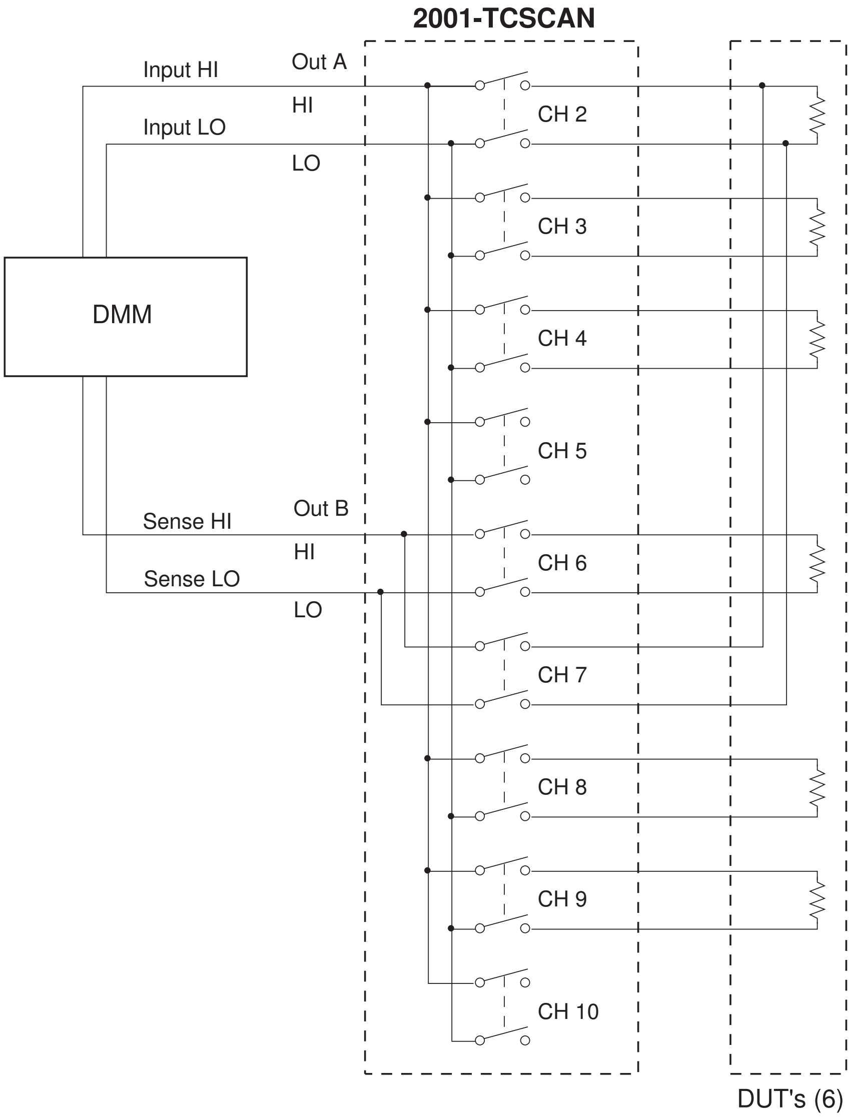
2001-TCSCAN
Input HI
Out A
HI
Input LO
LO
DMM
Sense HI
Out B
HI
Sense LO
LO
CH 2
CH 3
CH 4
CH 5
CH 6
CH 7
CH 8
CH 9
CH 10
DUT's (6)

Figure 3-5
Combining 2-pole and 4-pole switching

■ Combining 2-pole and 4-pole switching

The Model 2001-TCSCAN can combine 2- and 4-pole switching in various combinations. For example, you might require 4-pole switching for only two resistors, while the remaining resistors could be tested using conventional 2-pole switching.

Figure 3-5 shows a test configuration using mixed 2-pole and 4-pole switching. Four-pole switching is used only for the device connected to channels 2 and 7. Five more resistors are tested using 2-pole switching. In order to use this configuration, configure the channels for Ω2 and Ω4 functions as appropriate.

3.12.2 Resistor temperature coefficient testing

Temperature coefficient is the rate of change of resistance with respect to temperature, typically expressed as ppm/°C (parts per million per degree centrigrade).

For example, a resistor that measures exactly 100Ω at 25°C with a temperature coefficient of 100ppm/°C should not change more than 10mΩ per °C of temperature change. That resistor measured at 35°C should read between 99.900 and 100.100Ω (100Ω±100mΩ).

Temperature coefficient is calculated from the following equation:

$$\text{TC} = \frac{(\Delta R)(10^6)}{(R)(\Delta T)}$$

where:

TC = temperature coefficient in ppm/°C

ΔR = change in resistance (reference resistance – test resistance)

R = actual resistance at the reference temperature

ΔT = change in temperature (reference temperature – test temperature)

Typically, several samples of a particular resistor from a vendor will be tested to verify the specifications. The temperature coefficient is usually checked at several temperature points to ensure its integrity over a range of temperatures.

Evaluation of resistors can be done with a Model 2001-TC-SCAN card in a DMM to make temperature and 4-terminal resistance measurements. Temperature coefficients are calculated with respect to the resistance measurement made at a reference temperature. Thermal EMFs generated by connections in the test circuit are cancelled by the offset-compensated ohms feature of the DMM.

Figure 3-6 shows a system that can test accuracy and temperature coefficient of up to seven resistors that have the same specifications (resistance and temperature coefficient.)

The thermocouple is connected to channel 2, while a short is connected to channel 3 to allow for offset compensation. The HI terminals of the resistors are connected to channels 3-10, while the LO terminals are connected to the DMM LO terminals.

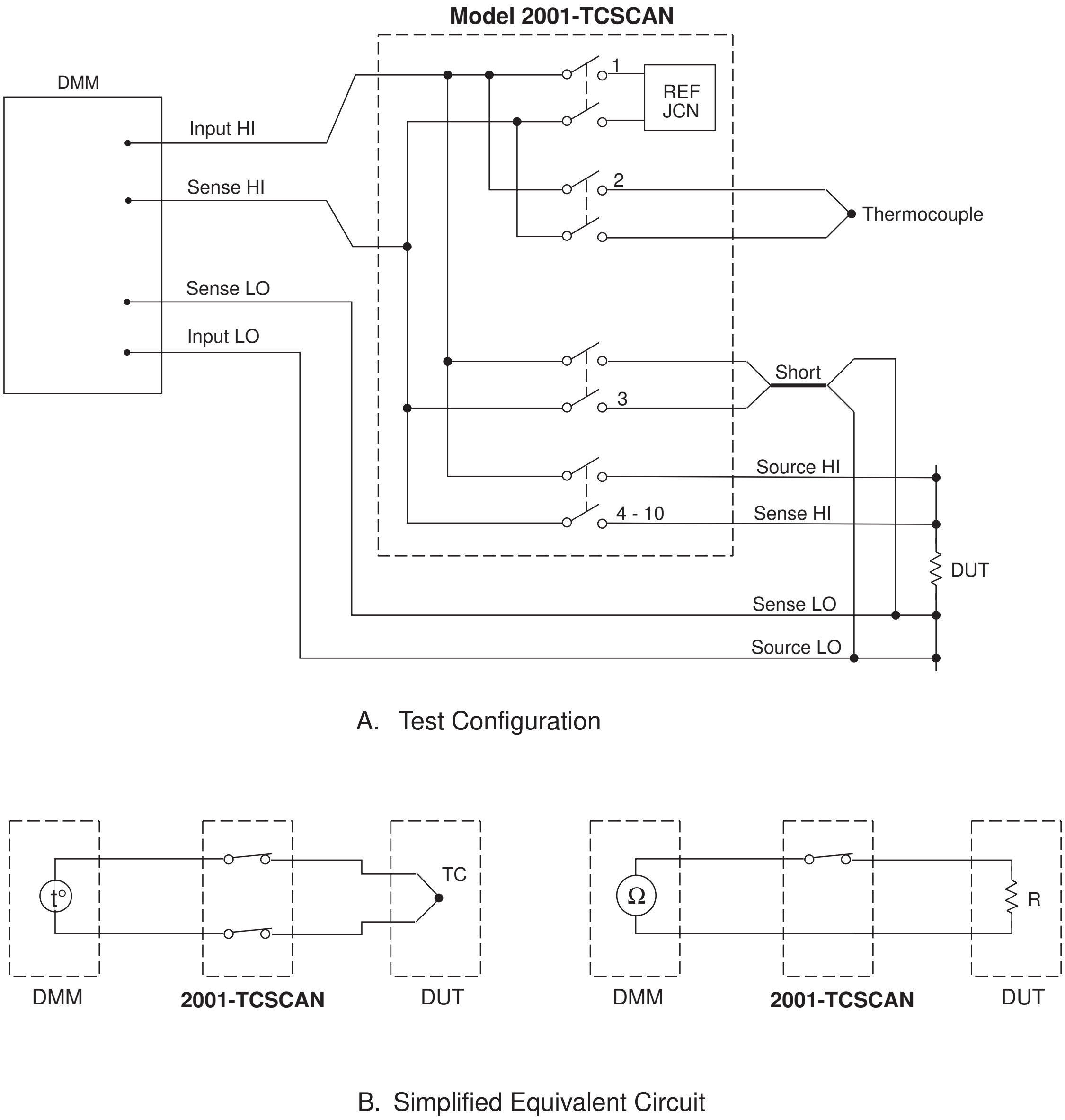
Model 2001-TCSCAN
DMM
Input HI
Sense HI
Sense LO
Input LO
1
REF JCN
2
Thermocouple
Short
3
Source HI
4 - 10
Sense HI
DUT
Sense LO
Source LO
A. Test Configuration
t°
TC
DMM
2001-TCSCAN
DUT
Ω
R
DMM
2001-TCSCAN
DUT
B. Simplified Equivalent Circuit

Figure 3-6
Resistor temperature coefficient testing

3.13 Measurement considerations

Many measurements made with the DMM are subject to various effects that can seriously affect low-level measurement accuracy. The following paragraphs discuss these effects and ways to minimize them.

3.13.1 Thermocouple measurement error sources

The temperature measurement accuracy specification of the Model 2001-TCSCAN is the sum of the following error sources:

- Reference junction sensor error
- Temperature gradient across the card

- Relay offset voltage
- DMM measurement accuracy
- DMM temperature conversion algorithm

You can achieve better card performance by understanding how these error sources contribute to the specification.

■ Reference junction sensor

The primary factor determining reference junction accuracy is the operating temperature. By using the Model 2001-TCSCAN in the 18°C to 28°C range, maximum sensor performance is achieved. The Model 2001-TCSCAN may also be used over 0°C to 18°C and 28°C to 50°C with somewhat reduced accuracy. See the specifications at the front of this manual for details.

■ Temperature gradient

Although the isothermal block minimizes temperature gradients, a temperature gradient develops across the connectors. This gradient contributes to the reference error and is as follows:

- Channels 2–6: 0.22°C
- Channels 7–10: 0.55°C

When making relative temperature measurements and not absolute measurements, it is advantageous to use adjacent channels. Adjacent channels will have no more than the following gradient between them:

- Channels 2–6: 0.05°C
- Channels 7–10: 0.07°C

■ Relay offset voltage

The primary source of offset voltage is the contact potential of the relay, typically <500nV. Channels 2–4, 6–9 have the lowest offset (1µV worst case), and channels 5 and 10 have a somewhat higher offset (<2µV). For a type K thermocouple, 1µV offset produces 0.024°C of error.

■ Measurement accuracy

The voltage measurement accuracy and temperature conversion algorithm determine the accuracy of the instrument. The DMM has these parameters combined with scanner card errors. For type K thermocouples, the DMM has 0.7°C accuracy. The Model 2001-TCSCAN card is responsible for no more than 0.48°C of these errors.

■ Temperature conversion algorithm

The DMM temperature conversion algorithm will contribute 0.07°C of error for a type K thermocouple.

■ Thermocouple wire errors

In most cases, the major source of error is the thermocouple wire. For the standard grade of type K thermocouple wire, the error is 2.2°C or 0.75%, whichever is greater. For the special grade of type K wire, the error is 1.1°C or 0.4% error.

■ Low-temperature accuracy

Model 2001-TCSCAN temperature accuracy specifications are given down to -100°C. For temperatures from -100.1°C and -200°C using type J, K, T, or E thermocouples, add an additional ±0.1°C of error.

3.13.2 Path isolation

The path isolation is simply the equivalent impedance between any two test paths in a measurement system. Ideally, the path isolation should be infinite, but the actual resistance and distributed capacitance of cables and connectors results in less than infinite path isolation values for these devices.

Path isolation resistance forms a signal path that is in parallel with the equivalent resistance of the DUT, as shown in Figure 3-7. For low-to-medium device resistance values, path isolation resistance is seldom a consideration; however, it can seriously degrade measurement accuracy when testing high-impedance devices. The voltage measured across such a device, for example, can be substantially attenuated by the voltage divider action of the device source resistance and path isolation resistance, as shown in Figure 3-8. Also, leakage currents can be generated through these resistances by voltage sources in the system.

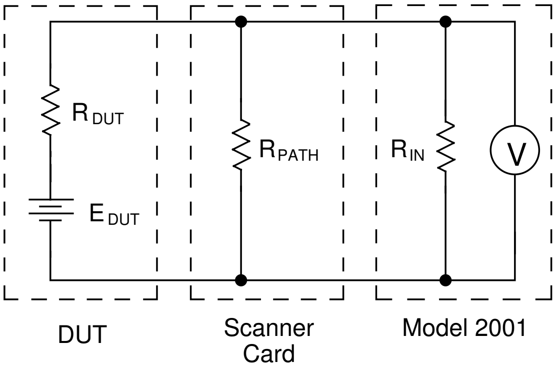

R_{DUT} = Source Resistance of DUT
E_{DUT} = Source EMF of DUT
R_{PATH} = Path Isolation Resistance
R_{IN} = Input Resistance of Model 2001

Figure 3-7
Path isolation resistance

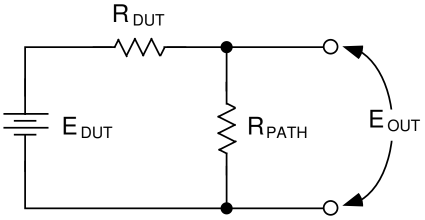

$$E_{OUT} = \frac{E_{DUT}\,R_{PATH}}{R_{DUT} + R_{PATH}}$$

Figure 3-8
Voltage attenuation by path isolation resistance

3.13.3 Channel resistance

The on resistance of channels 5 and 10 is approximately <240Ω. For this reason, you should not use channels 5 and 10 for low-to-medium 2-wire resistance measurements (<100kΩ). For example, measuring a 1kΩ resistor using channel 5 or channel 10 will result in an error of more than 25%.

3.13.4 Magnetic fields

When a conductor cuts through magnetic lines of force, a very small current is generated. This phenomenon will frequently cause unwanted signals to occur in the test leads of a scanning system. If the conductor has sufficient length, even weak magnetic fields like those of the earth can create sufficient signals to affect low-level measurements. Two ways to reduce these effects are: (1) reduce the lengths of the test leads, and (2) minimize the exposed circuit area. In extreme cases, magnetic shielding may be required. Special metal with high permeability at low flux densities (such as mu metal) is effective at reducing these effects.

Even when the conductor is stationary, magnetically induced signals may still be a problem. Fields can be produced by various signals such as the AC power line voltage. Large inductors such as power transformers can generate substantial magnetic fields, so care must be taken to keep the switching and measuring circuits a good distance away from these potential noise sources. At high current levels, even a single conductor can generate significant fields. These effects can be minimized by using twisted pairs, which will cancel out most of the resulting fields.

3.13.5 Electromagnetic Interference (EMI)

The electromagnetic interference characteristics of the Models 2000/2001/2002 Multimeters comply with the electromagnetic compatibility (EMC) requirements of the European Union (EU) directives as denoted by the CE mark. However, it is still possible for sensitive measurements to be affected by external sources. In these instances, special precautions may be required in the test setup.

Sources of EMI include:

- Radio and television /broadcast transmitters.
- Communications transmitters, including cellular phones and handheld radios.
- Devices incorporating microprocessors and high-speed digital circuits.
- Impulse sources as in the case of arcing in high-voltage environments.

The instrument, measurement leads, and other cables should be kept as far away as possible from any EMI sources. Shielding measurement leads and the multimeter may reduce EMI to acceptable levels. In extreme cases, a specially constructed screen room may be required to sufficiently attenuate troublesome signals.

Many instruments incorporate internal filtering that may help reduce EMI effects. In some cases, additional external filtering may be required. Keep in mind, however, that filtering may have detrimental effects on the measurement.

3.13.6 Ground loops

When two or more instruments are connected together, care must be taken to avoid unwanted signals caused by ground loops. Ground loops usually occur when sensitive instrumentation is connected to other instrumentation with more than one signal return path such as power line ground. As shown in Figure 3-9, the resulting ground loop causes current to flow through the instrument LO signal leads and then back through power line ground. This circulating current develops a small but undesirable voltage between the LO terminals of the two instruments. This voltage will be added to the source voltage, affecting the accuracy of the measurement.

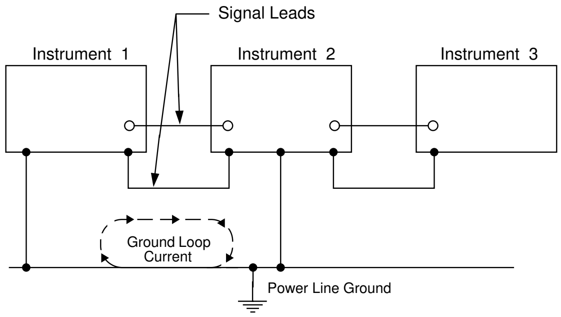

Figure 3-9
Power line ground loops

Figure 3-10 shows how to connect several instruments together to eliminate this type of ground loop problem. Here, only one instrument is connected to power line ground. Ground loops are not normally a problem with instruments having isolated LO terminals. However, all instruments in the test setup may not be designed in this manner. When in doubt, consult the manual for all instrumentation in the test setup.

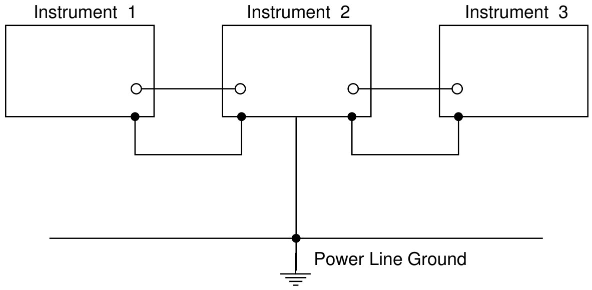

Figure 3-10
Eliminating ground loops

3.13.7 Keeping connectors clean

As is the case with any high-resistance device, the integrity of connectors can be compromised if they are not handled properly. If connector insulation becomes contaminated, the insulation resistance will be substantially reduced, affecting high-impedance measurement paths. Oils and salts from the skin can contaminate connector insulators, reducing their resistance. Also, contaminants present in the air can be deposited on the insulator surface. To avoid these problems, never touch the connector insulating material. In addition, the scanner card should be used only in clean, dry environments to avoid contamination.

If the connector insulators should become contaminated, either by inadvertent touching, or from air-borne deposits, they can be cleaned with a cotton swab dipped in clean methanol. After thoroughly cleaning, they should be allowed to dry for several hours in a low-humidity environment before use, or they can be dried more quickly using dry nitrogen.

4

Service Information

WARNING

The information in this section is intended only for qualified service personnel. Some of the procedures may expose you to hazardous voltages that could result in personal injury or death. Do not attempt to perform these procedures unless you are qualified to do so.

4.1 Introduction

This section contains information necessary to service the Model 2001-TCSCAN scanner card and is arranged as follows:

4.2 **Handling and cleaning precautions:** Discusses handling precautions and methods to clean the card should it become contaminated.

4.3 **Performance verification:** Covers the procedures necessary to determine if the scanner card meets stated specifications.

4.4 **Calibration:** Describes calibrating the card reference junction to its specified accuracy.

4.5 **Special handling of static-sensitive devices:** Reviews precautions necessary when handling static-sensitive devices.

4.6 **Principles of operation:** Briefly discusses circuit operation.

4.7 **Troubleshooting:** Presents some troubleshooting tips for the Model 2001-TCSCAN including relay replacement precautions.

4.8 **Scanner card modification:** Explains the procedure for removing the current-limiting resistors in channels 5 and 10.

4.2 Handling and cleaning precautions

Because of the high-impedance areas on the Model 2001-TCSCAN, care should be taken when handling or servicing the card to prevent possible contamination. The following precautions should be observed when servicing the card.

4.2.1 Handling precautions

- Handle the card only by the edges and shields.
- Do not touch any board surfaces or components not associated with the repair.
- Do not touch areas adjacent to electrical contacts.
- When servicing the card, wear clean cotton gloves.
- Do not store or operate the card in an environment where dust could settle on the circuit board.

- Use dry nitrogen gas to clean dust off the board if necessary.

4.2.2 Soldering precautions

Should it become necessary to use solder on the circuit board, observe the following precautions:

- Use an OA-based (organic activated) flux, and take care not to spread the flux to other areas of the circuit board.
- Remove the flux from the work areas when the repair has been completed. Use pure water along with clean cotton swabs or a clean, soft brush to remove the flux.
- Once the flux has been removed, swab only the repaired area with methanol, then blow dry the board with dry nitrogen gas.
- After cleaning, the card should be allowed to dry in a 50°C low-humidity environment for several hours before use.

4.3 Performance verification

The following paragraphs discuss performance verification procedures for the Model 2001-TCSCAN, including reference junction, path resistance, contact potential, and isolation.

CAUTION

Contamination will degrade the performance of the card. To avoid contamination, always grasp the card by the side edges and covers. Do not touch connector insulators, board surfaces, or components.

NOTE

Failure of any performance verification test may indicate that the scanner card is contaminated. See paragraph 4.2 for information on cleaning the card.

4.3.1 Environmental conditions

All verification measurements should be made at an ambient temperature between 18° and 28°C, and at a relative humidity of less than 70%.

4.3.2 Recommended equipment

Table 4-1 summarizes the equipment needed for performance verification and calibration (covered in paragraph 4.4). The Model 2001 DMM is used in the procedures. However, you can also use the Model 2000, 2002, or 2010. If using the Model 2000 or 2010, you may have to alter some procedure steps slightly.

4.3.3 Scanner card connections

Jumper wires or connecting cables can simply be hard-wired directly to the screw terminals of the Model 2001-TCSCAN. Detailed connection information is provided in Section 2.

4.3.4 Reference junction test

This procedure verifies that the Model 2001-TCSCAN card is operating within its temperature specification. The Model 2001 Multimeter is used to close Channel 1 of the card.

A second DMM must be used to make the voltage measurements because the Model 2001 will not meet specifications with the cover removed.

1. Remove the top shield from the Model 2001-TCSCAN, and install it in the first Model 2001. Remove the Model 2001 cover to allow access to the card (see paragraph 4.7.2).
2. Turn on the second Model 2001, and set it to the 200mVDC range. Short the test lead ends together. Zero the multimeter after the thermals have stabilized (one hour if from cold-start).
3. Set up the test equipment as shown in Figure 4-1, and let it warm up one hour. Be sure to protect the card from air drafts. Use a probe with a specified accuracy of ±0.005°C. The combination of the probe and reference thermometer should be accurate to ±0.03°C.

4. Coat the probe with a thermally conductive compound, and insert it into the 0.110” hole marked “CAL” on the Model 2001-TCSCAN printed circuit board.
5. Use the Model 2001 #1 front panel CHAN key to close Channel 1.
6. Take a reading from the reference thermometer (T_J). Use the following equation to calculate the equivalent reference junction output voltage (V_{REF}):

$$V_{REF} = (T_J + 273.15) \times 0.0002$$

7. Read the voltage across the output of OUT A (Model 2001 #2). Compare the measured and calculated voltages. If they differ by more than 72µV (0.36°C), perform the calibration procedure of paragraph 4.4.1.

Table 4-1

Verification and calibration equipment

Description	Model or part	Specifications	Applications
DMM*	Keithley Model 2001	20Ω, 72ppm 200kΩ, 90ppm 200mV, 37ppm	Path resistance Calibration Reference junction, calibration
Electrometer w/voltage source	Keithley Model 6517	20pA, 200pA; 1.6% 200V source; 0.05%	Offset current, path isolation
Sensitive Digital Voltmeter	Keithley Model 182	3mV; 60ppm	Contact potential
Triax cable (unterminated)	Keithley Model 237-ALG-2	—	Offset current
Low thermal cable (unterminated)	Keithley Model 1484	—	Contact potential
Thermistor probe	Thermometrics Series CSP A207A	±0.005°C accuracy	Reference junction, calibration
Reference thermometer	—	±0.01°C w/thermistor	Reference junction, calibration
Distilled water ice bath (Dewar flask or Thermos)	—	±0.1°C	Calibration
#22 AWG solid copper wire	—	—	Path resistance
#22 AWG Teflon-insulated stranded wire	—	—	Path isolation

* Two DMMs are required for thermistor calibration method and reference junction test.

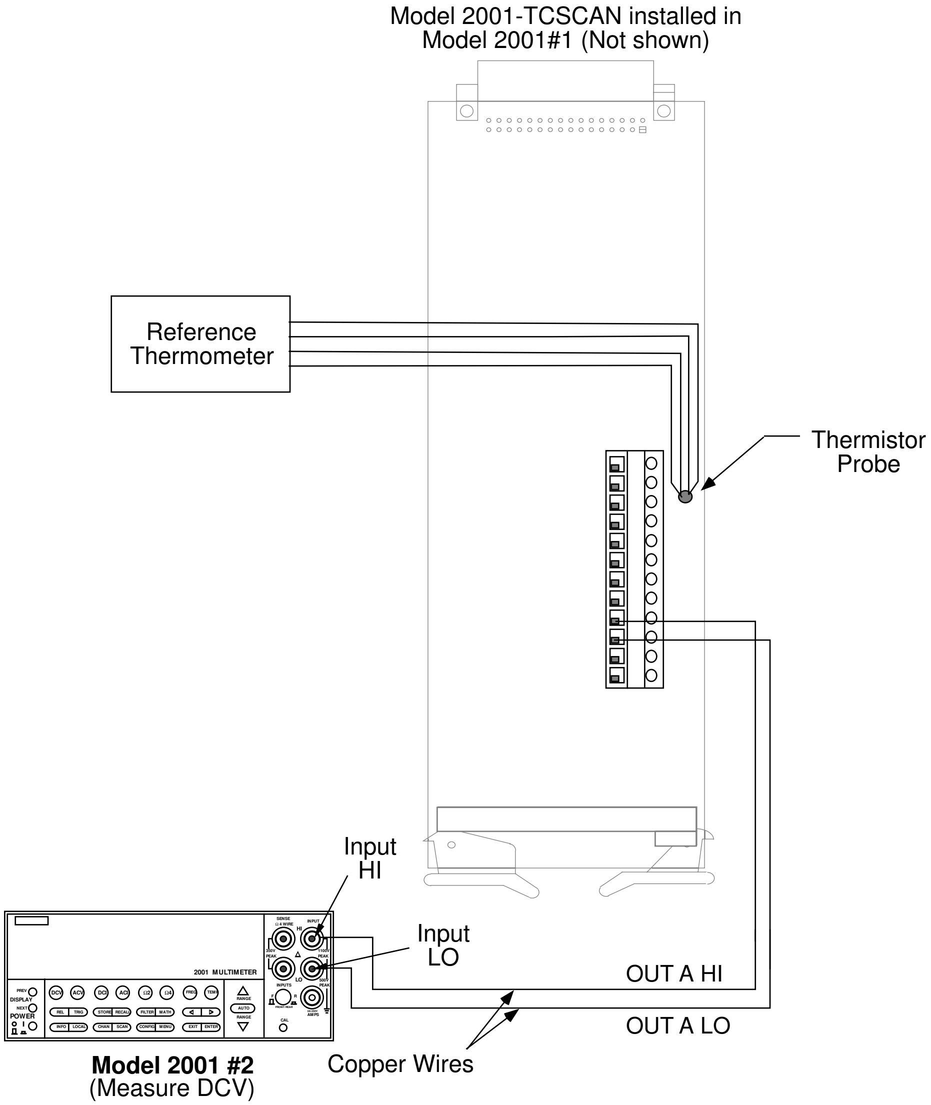
Model 2001-TCSCAN installed in
Model 2001#1 (Not shown)
Reference
Thermometer
Thermistor
Probe
Input
HI
Input
LO
OUT A HI
OUT A LO
Copper Wires
2001 MULTIMETER
Model 2001 #2
(Measure DCV)

Figure 4-1
Connections for reference junction test

4.3.5 Path resistance tests

Perform the following steps to verify that the path resistance of each channel is with specified values.

1. Connect the HI and LO terminals of all nine channel inputs together using #22AWG solid copper jumper wires (see Figure 4-2).

NOTE

Make sure that all jumper wires are clean and free of oxides.

2. Connect the output cables to OUT A HI and LO, as shown in Figure 4-2.
3. With the power off, install the scanner card in the Model 2001 Multimeter.

4. Turn on the Model 2001, and allow it to warm up for one hour before proceeding.
5. Select the Ω2W function and the 20Ω range on the Model 2001.
6. Temporarily connect a second set of output leads, identical in length and type to the leads connected to the scanner card output, to the Model 2001 rear panel HI and LO INPUT jacks. Be sure to select the rear panel terminals with the front panel INPUTS switch.
7. Short the free ends of the temporary leads together, and allow the reading to settle. Enable the Model 2001 REL mode after settling, and leave REL enabled for the remainder of the path resistance tests.
8. Disconnect the temporary leads from the multimeter, and connect the output leads from the scanner card to the rear panel HI and LO INPUT jacks (see Figure 4-2).
9. Close channel 2 as follows;
   A. From normal display, press CHAN. The instrument will display the following:

      CHANNEL SELECTION
      CLOSE-CHANNEL   OPEN-ALL-CHANNELS

   B. Select CLOSE-CHANNEL, then press ENTER. The Model 2001 will display the following:

      ENTER CHAN#01 (1-10)

   C. Using the range and cursor keys, select channel 02, then press ENTER.

   D. Press EXIT to return to normal display.
10. Note the resistance reading on the Model 2001. Verify that the reading is <2Ω.
11. Repeat steps 9 and 10 for channels 3-10. Verify that the path resistance for each channel is as follows:
    - Channels 2-4, 6-9: <2Ω.
    - Channels 5 and 10: <252Ω.

NOTE

Change to the 2kΩ resistance range when measuring channels 5 and 10. Always use the lowest possible range for best accuracy.

12. After completing the tests, turn off the Model 2001 power, remove the scanner card, and remove all jumper wires (leave HI and LO shorted for each channel if you intend to perform contact potential tests).

4.3.6 Contact potential tests

These tests check the EMF (contact potential) generated by each relay contact pair (HI and LO) for each channel. The tests use a sensitive digital voltmeter (Model 182) to measure the contact potential.

Perform the following procedure to check contact potential of each channel.

1. Connect 1” #22AWG copper jumper wires between the HI and LO terminals of each channel input (see Figure 4-3).
2. Connect the Model 182 to OUT A HI and LO using the low-thermal cable (see Figure 4-3).
3. With the power off, install the scanner card in the Model 2001 Multimeter.
4. Turn on the Model 2001 and the Model 182 Sensitive Digital Voltmeter. Allow the Model 182 to warm up for two hours before measurement.
5. Select the 3mV range on the Model 182.
6. Select the DCV function on the Model 2001.
7. Using the CHAN key, close channel 2 (see paragraph 4.3.5 for procedure).
8. Verify that the Model 182 reading is <1µV.
9. Repeat steps 7 and 8 for all nine channels. The reading for channels 2-4 and 6-9 should be <1µV, and the reading for channels 5 and 10 should be <2µV.
10. After completing all measurements, turn off the Model 2001 power, remove the scanner card, and disconnect all jumpers and test leads.

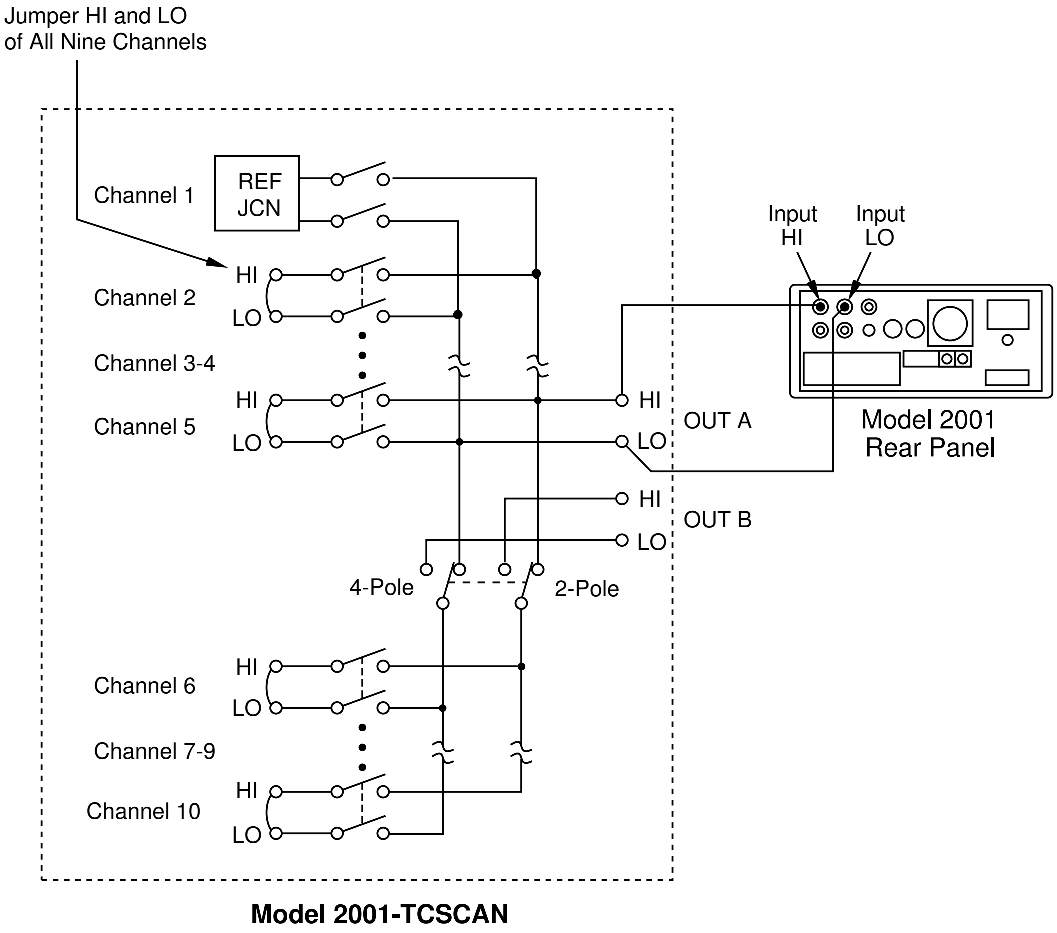
Jumper HI and LO
of All Nine Channels
Channel 1
REF
JCN
Channel 2
HI
LO
Channel 3-4
Channel 5
HI
LO
OUT A
HI
LO
OUT B
4-Pole
2-Pole
Channel 6
HI
LO
Channel 7-9
Channel 10
HI
LO
Input
HI
Input
LO
Model 2001
Rear Panel
Model 2001-TCSCAN

Figure 4-2
Connections for path resistance checks

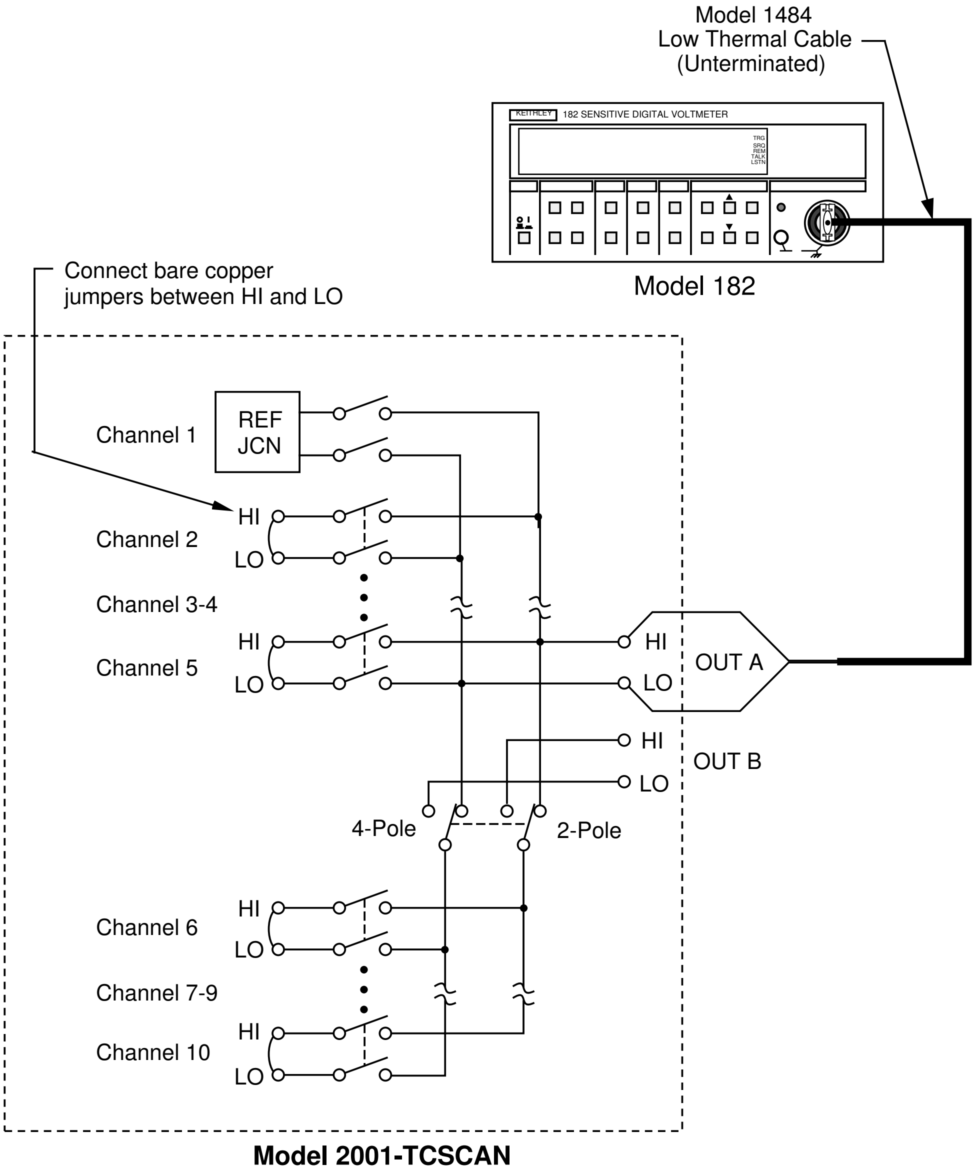
Model 1484
Low Thermal Cable
(Unterminated)
KEITHLEY 182 SENSITIVE DIGITAL VOLTMETER
TRG
SRQ
REM
TALK
LSTN
Model 182
Connect bare copper
jumpers between HI and LO
Channel 1
REF
JCN
Channel 2
HI
LO
Channel 3-4
Channel 5
HI
LO
HI
LO
OUT A
HI
LO
OUT B
4-Pole
2-Pole
Channel 6
HI
LO
Channel 7-9
Channel 10
HI
LO
Model 2001-TCSCAN

Figure 4-3
Connections for contact potential tests

4.3.7 Isolation tests

These tests check the leakage resistance (isolation) between all HI and LO terminals and from HI and LO terminals to chassis ground. In general, the test is performed by applying a voltage (100V) across the terminals and then measuring the leakage current. The isolation resistance is then calculated as R = V/I. In the following procedure, the Model 6517 functions as a voltage source and as an ammeter. In the resistance (R) function, the Model 6517 internally calculates the resistance from the known voltage and current levels, and displays the resistance value.

Perform the following steps to check isolation:

1. Connect a 4” length of Teflon-insulated #22AWG stranded wire to every HI and LO terminal on the scanner card (both inputs and outputs). Mark the free end of each wire so you can identify wires when the scanner card is installed.
2. With the power off, install the scanner card in the multimeter.
3. Turn on the Model 2001 power.
4. Turn on the Model 6517, and allow the unit to warm up for one hour for rated accuracy.
5. With the V-Source in standby (OPERATE indicator off) and zero check enabled (Zero Check displayed), configure the Model 6517 to make >1GΩ resistance (R) measurements using a V-Source value of +100V. Refer to the Model 6517 User’s manual for details on electrometer operation.

WARNING

The following steps use high voltage (100V). Be sure the V-Source is in standby before making connection changes.

6. With the Model 6517 in standby, connect the electrometer to OUT A HI and LO terminals of the scanner card, as shown in Figure 4-4.
7. Close channel 2 using the CHAN key (see paragraph 4.3.5 for details).
8. On the Model 6517, disable zero check, and press OPER to source 100V.
9. After allowing the reading on the Model 6517 to settle, verify that the reading is >1GΩ ($10^9\Omega$). This measurement represents the isolation resistance between the HI and LO terminals of channel 2.
10. Place the Model 6517 in standby, and enable zero check.
11. Repeat steps 7 through 10 for channels 3 through 10. Be sure that the channel under test is closed.
12. With the Model 6517 voltage source in standby, connect the electrometer to the HI terminals of scanner card channels 2 and 3, as shown in Figure 4-5.
13. Close channel 2 using the CHAN key.
14. On the Model 6517, disable zero check, and press OPER to source 100V.
15. After allowing the reading on the Model 6517 to settle, verify that the reading is >1GΩ ($10^9\Omega$). This measurement represents the isolation resistance between the HI terminals of channels 2 and 3.
16. Place the Model 6517 in standby, and enable zero check.
17. Repeat steps 12 through 16 to measure isolation resistance between the channel 2 HI terminal and channels 4 through 10 HI terminals. Be sure that the electrometer is connected to the HI terminals of the two channels being tested, and that channel 2 is closed.
18. Repeat steps 12 through 17 for the LO terminals of channels 2 through 10. Be sure the electrometer is connected to the LO terminals of the two channels being tested, and that channel 2 is closed.
19. With the electrometer voltage source in standby, connect the electrometer to channel 2 HI and chassis ground, as shown in Figure 4-6.
20. Program the Model 2001 to close channel 2.
21. On the Model 6517, disable zero check, and press OPER to source +100V.
22. After allowing the reading on the Model 6517 to settle, verify that it is >1GΩ ($10^9\Omega$).
23. Put the electrometer in standby, and enable zero check.
24. Repeat steps 19 through 23 for channels 3 through 10. One electrometer lead should be connected to the HI terminal of the channel being testing, and the other lead should be connected to chassis ground.
25. Repeat steps 19 through 24 for channels 2 through 10 LO terminals. One electrometer lead should be connected to the LO terminal of the channel being tested, and the other lead should be connected to chassis ground. In addition, channel 2 should be closed.

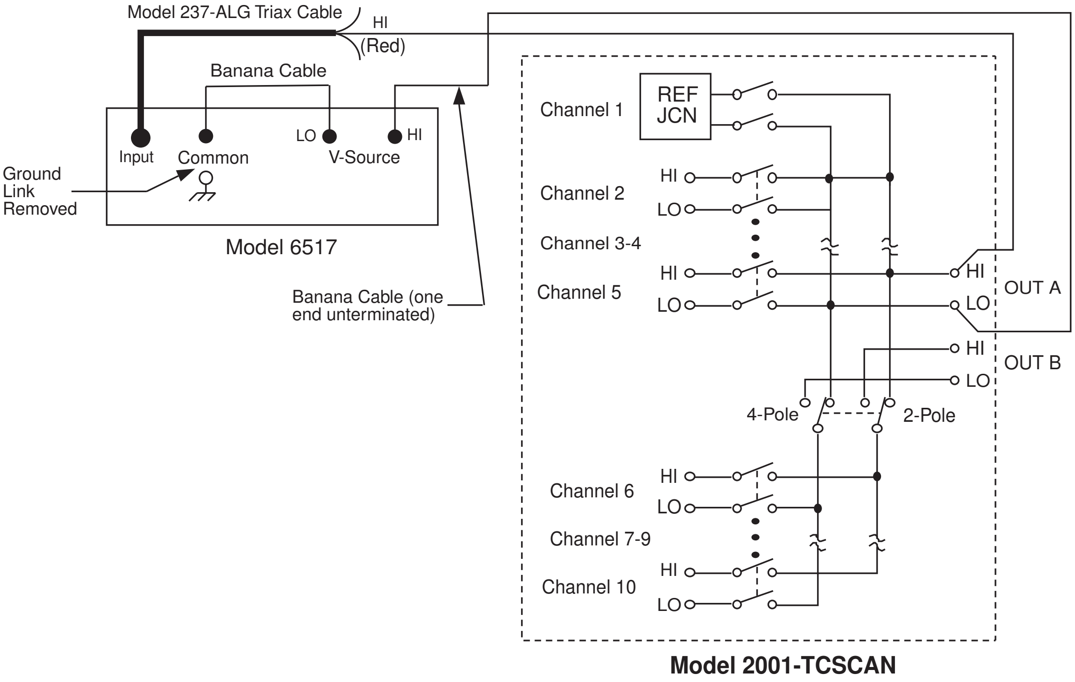
Model 237-ALG Triax Cable
HI
(Red)
Banana Cable
LO
HI
Input
Common
V-Source
Ground
Link
Removed
Model 6517
Banana Cable (one
end unterminated)
Channel 1
REF
JCN
Channel 2
HI
LO
Channel 3-4
Channel 5
HI
LO
HI
LO
OUT A
HI
LO
OUT B
4-Pole
2-Pole
Channel 6
HI
LO
Channel 7-9
Channel 10
HI
LO
Model 2001-TCSCAN

Figure 4-4
Connections for same-channel isolation tests

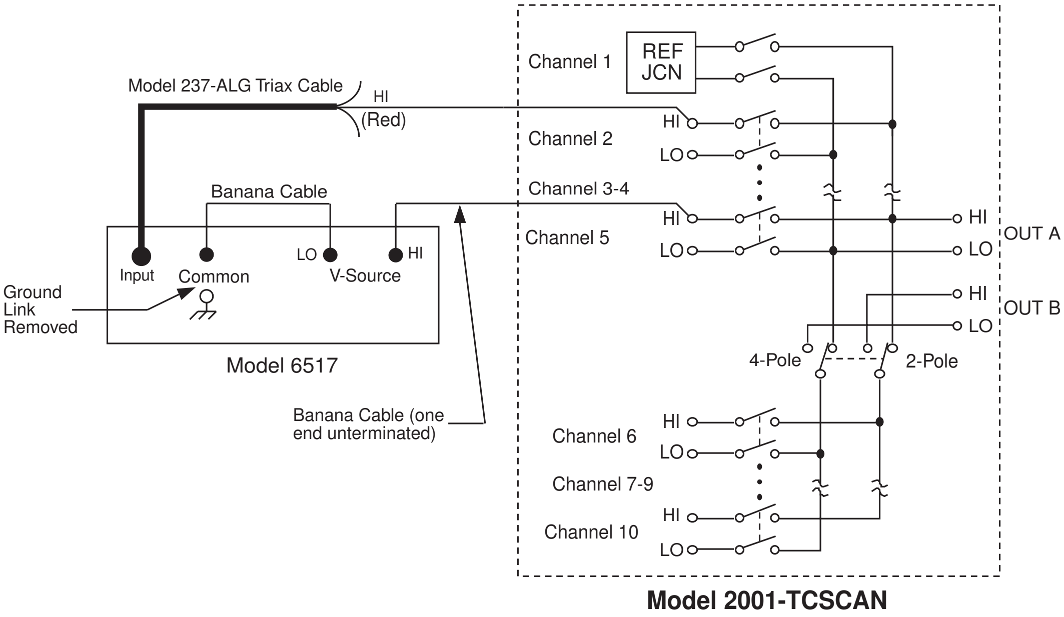
Model 237-ALG Triax Cable
HI
(Red)
Banana Cable
LO
HI
Input
Common
V-Source
Ground
Link
Removed
Model 6517
Banana Cable (one
end unterminated)
Channel 1
REF
JCN
Channel 2
HI
LO
Channel 3-4
Channel 5
HI
LO
HI
LO
OUT A
HI
LO
OUT B
4-Pole
2-Pole
Channel 6
HI
LO
Channel 7-9
Channel 10
HI
LO
Model 2001-TCSCAN

Figure 4-5
Connections for channel-to-channel isolation tests

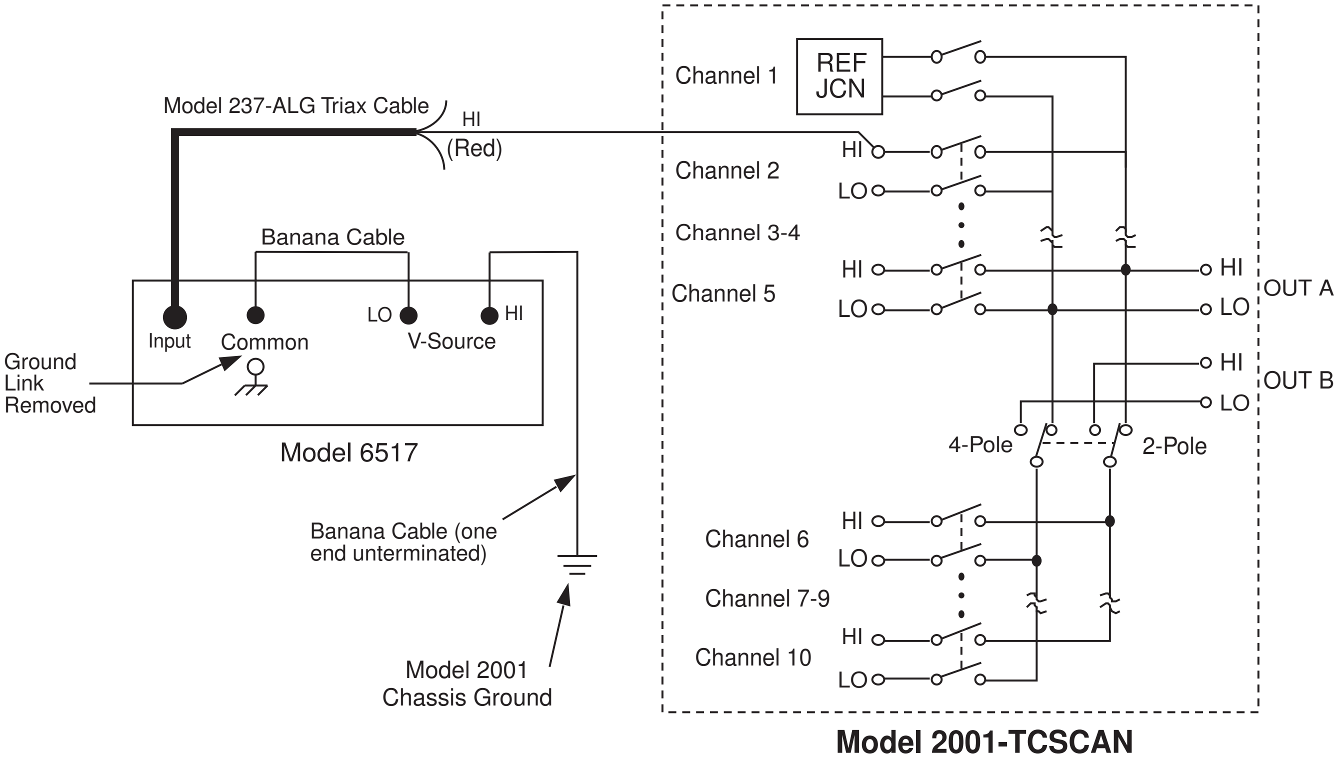
Model 237-ALG Triax Cable
HI
(Red)
Banana Cable
Input
Common
LO
V-Source
HI
Ground
Link
Removed
Model 6517
Banana Cable (one
end unterminated)
Model 2001
Chassis Ground
Channel 1
REF
JCN
Channel 2
HI
LO
Channel 3-4
Channel 5
HI
LO
OUT A
HI
LO
OUT B
4-Pole
2-Pole
Channel 6
Channel 7-9
Channel 10
Model 2001-TCSCAN

Figure 4-6
Connections for HI and LO terminal to chassis ground isolation tests

4.4 Calibration

There are two calibration procedures given here. The first procedure establishes the specified accuracy of the Model 2001-TCSCAN card with a calibrated thermistor probe monitoring the temperature of the isothermal block. The second procedure establishes an ice-point reference for a piece of thermocouple wire from the spool intended for a Model 2001-TCSCAN application.

Both calibration procedures should be performed at an ambient temperature of 23°C ±3°C, and a relative humidity of less than 70%.

NOTE

It is recommended that the Model 2001-TCSCAN be calibrated in the same Model 2001 Multimeter being used for normal applications.

4.4.1 Calibration with thermistor probe

This procedure requires a calibrated thermistor probe (Thermometrics Series CSP A207A or equivalent). The test can be automated with a bus controller.

Bench reset conditions are assumed for the Model 2001. In general, the procedure has the followings steps:

1. Set the Model 2001 Multimeter to the 200kΩ range. (The short circuit current is 7µA. Due to the self-heating effects of the thermistor probe at higher current, do not use a lower resistance range.) Let the Model 2001 warm up for one hour.
2. Set another Model 2001 to the 200mV DC range. Insert a 2-terminal low thermal shorting bar into the voltage inputs. Zero the Model 2001 after one hour, and remove the shorting bar.
3. Set up the test equipment as shown in Figure 4-7. Remove the cover of the Model 2001 as explained in paragraph 4.7.2.
4. Remove the card top shield and cable clamp. Insert the card into the Model 2001, and protect it from air drafts.
5. Coat the probe with a thermally conductive compound, and insert it into the 0.110-inch hole marked “CAL” on the PC board.
6. Take a reading of the probe resistance when it stabilizes.
7. Using the lookup tables for the CSP A207A probe, find the Celsius temperature that corresponds to the above probe resistance. This value is the temperature of the isothermal block as measured by the probe.
8. The following equation calculates the equivalent reference junction output voltage (V_{REF}):

   $V_{REF} = (T_J + 273.15) \times 0.0002$

9. Close Channel 1 on the Model 2001-TCSCAN card, and read the output voltage; it should equal the V_{REF} voltage just calculated. Adjust trimmer R151 until the equivalent temperature equals:

   probe temp. ±0.05°C

10. Check the probe resistance again, and find the corresponding temperature with the lookup tables. If the new value differs by more than 0.01°C from the temperature found in step 7, repeat steps 8 and 9.

4.4.2 Calibration with thermocouple wire

This procedure compensates for errors of the reference junction circuitry and establishes a compensation factor for the offset of the particular piece of thermocouple wire. Because of an inherent error source, (the thermocouple wire used in measuring the ice-point), absolute calibration accuracy cannot be guaranteed.

Assuming the homogeneity of the thermocouple wire spool, errors due to thermocouple offset voltages will be significantly reduced for the entire system. For subsequent applications of this particular Model 2001-TCSCAN card, the same spool of wire should be used on the same channel; otherwise the Model 2001-TCSCAN should be recalibrated. This example uses channel 2. Change connections and setup appropriately for other channels.

This procedure assumes bench reset conditions on the Model 2001.

1. On the Model 2001-TCSCAN, connect the thermocouple positive lead to Channel 2 HI and the negative lead (red insulation) to Channel 2 LO. Connect copper wires to the HI and LO terminals of OUT A. Remove the cable clamp, and insert a non-metallic screwdriver to adjust trimmer R151. See Figure 4-8.
2. Insert the Model 2001-TCSCAN into a Model 2001. Connect the output wires to the INPUT HI and LO terminals of the Model 2001.
3. Turn on the instrument, and allow it to warm up for at least one hour.
4. Fill a Dewer flask or Thermos half full with pea-sized ice made from distilled water. Fill up the flask with distilled water. Stir the contents.
5. Place a twisted or welded thermocouple junction into the volume of the flask occupied by ice. Cover the flask, and stir contents occasionally. Allow 20 minutes for temperature stabilization. Add more ice as necessary.
6. On the Model 2001, select the TEMP function and configure it as follows:
   - Select a thermocouple temperature sensor, and choose the appropriate type.
   - Configure reference junction #1 (JCN1) with the temperature coefficient (+00.20mV/°C) and offset voltage (+54.63mV @ 0°C) for the Model 2001-TCSCAN.
   - Select temperature units of DEG-F (to yield better resolution than DEG-C).
7. From the CONFIG-CHAN menu of the Model 2001, select internal inputs, the JN1 function for Channel 1, and

the TMP function for Channel 2. (Set all other channels to ---.)

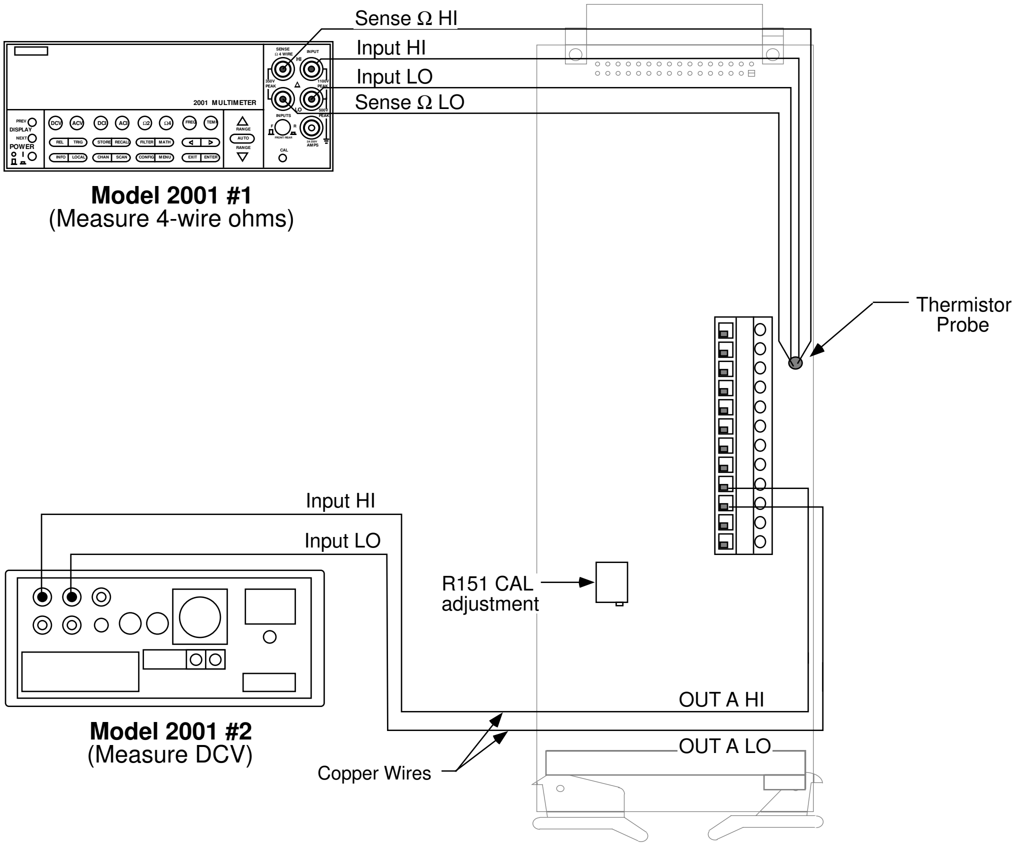
Sense Ω HI
Input HI
Input LO
Sense Ω LO
2001 MULTIMETER
Model 2001 #1
(Measure 4-wire ohms)
Thermistor Probe
Input HI
Input LO
R151 CAL adjustment
Model 2001 #2
(Measure DCV)
OUT A HI
OUT A LO
Copper Wires

Note : Install card in Model 2001 #2

Figure 4-7
Calibration with thermistor probe

8. Start scanning as follows:
   - A. Press SCAN, enter a SCAN COUNT of 99999, then press ENTER.
   - B. Select SCAN TIMER operation, then press ENTER.
   - C. Choose a scan INTRVL of 1.5, then press ENTER.
   - D. Choose NO DATA TO MEMORY, then press ENTER.
   - E. Press ENTER to begin scanning.
9. Note the reading on the Model 2001 display when Channel 2 is closed. If the display reads other than 32.0°F, adjust trimmer R151 on the Model 2001-TCSCAN card until the Model 2001 reads 32.0°F, ±1 count.
10. Press EXIT on the Model 2001 to stop the scan.

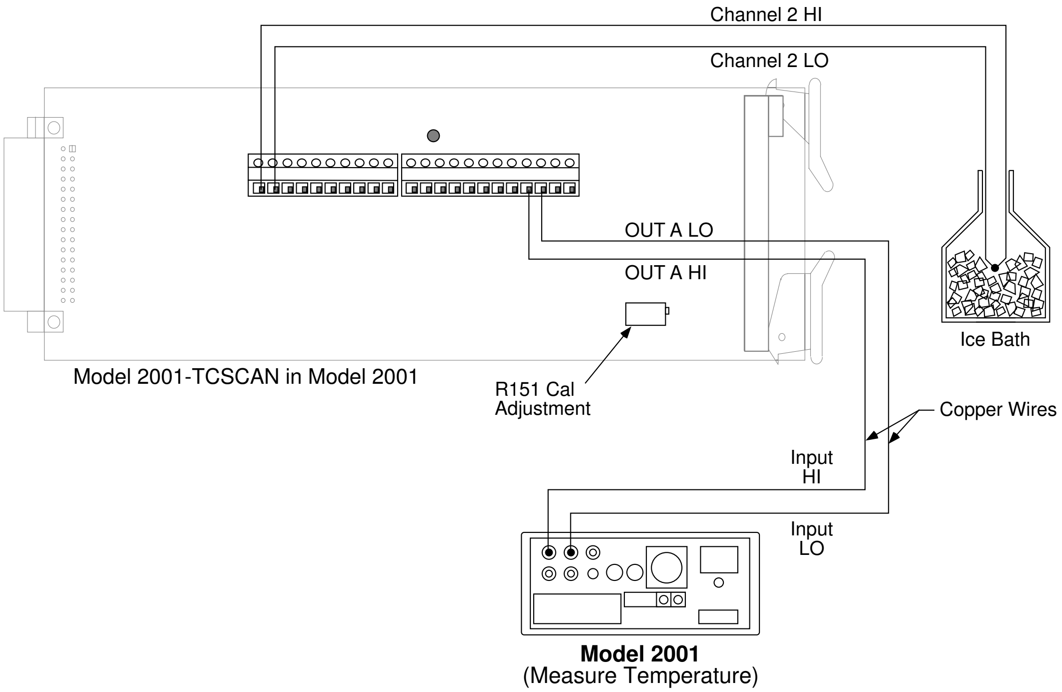

Figure 4-8
Calibration with thermocouple wire

4.5 Special handling of static-sensitive devices

CMOS and other high-impedance devices are subject to possible static discharge damage because of the high-impedance levels involved. When handling such devices, use the precautions listed below.

NOTE

In order to prevent damage, assume that all parts are static-sensitive.

1. Such devices should be transported and handled only in containers specially designed to prevent or dissipate static build-up. Typically, these devices will be received in anti-static containers made of plastic or foam. Keep these parts in their original containers until ready for installation or use.
2. Remove the devices from their protective containers only at a properly grounded workstation. Also, ground yourself with an appropriate wrist strap while working with these devices.
3. Handle the devices only by the body; do not touch the pins or terminals.
4. Any printed circuit board into which the device is to be inserted must first be grounded to the bench or table.
5. Use only anti-static type de-soldering tools and grounded-tip soldering irons.

4.6 Principles of operation

The following paragraphs discuss the basic operating principles for the Model 2001-TCSCAN, and can be used as an aid in troubleshooting the card. The schematic drawing of the card is located at the end of Section 5.

4.6.1 Block diagram

Figure 4-9 shows a simplified block diagram of the Model 2001-TCSCAN. Key elements include the relay drivers and relays, and the power-up reset circuit. These various elements are discussed in the following paragraphs.

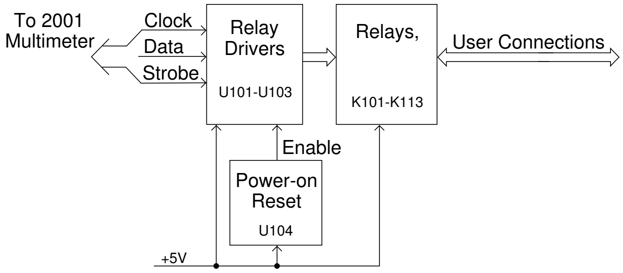

Figure 4-9
Block diagram

4.6.2 Relay control

Card relays are controlled by serial data transmitted via the relay DATA line. A total of three bytes are shifted in serial fashion into latches located in the card relay driver ICs. The serial data is clocked in by the CLOCK line. As data overflows one register, it is fed out the Q'S line of the register down the chain.

Once all three bytes have shifted into the card, the STROBE line is set high to latch the relay information into the Q outputs of the relay drivers, and the appropriate relays are energized (assuming the driver outputs are enabled, as discussed below). Note that a relay driver output goes low to energize the corresponding relay.

4.6.3 Switching circuits

Relays K101 through K106 and K108 to K113 perform input switching, while K107 configures the card for 2-pole or 4-pole operation.

4.6.4 Power-on safeguard

A power-on safeguard circuit, made up of U104 and associated components, ensures that relays do not change state on power-up and power-down. This circuit disables all relay actuation during power-up and power-down periods by holding the OE (output enable lines) high during these periods.

4.6.5 Reference junction

The reference junction for cold junction compensation is made up of U105 and associated components. Calibration adjustment is provided by R151.

4.7 Troubleshooting

4.7.1 Troubleshooting equipment

Table 4-2 summarizes recommended equipment for troubleshooting the Model 2001-TCSCAN.

Table 4-2
Recommended troubleshooting equipment

Description	Manufacturer and model	Application
Multimeter	Keithley 2001	DCV checks
Oscilloscope	TEK 2243	View logic waveforms

4.7.2 Troubleshooting access

In order to gain access to the scanner card circuit board to measure voltages under actual operating conditions, perform the following steps:

1. Turn off the Model 2001 power, and disconnect the line cord and all other equipment.
2. If wires are connected to the scanner card, remove the scanner card from the multimeter.
3. Remove the Model 2001 cover as follows:
   A. Remove the handle by rotating it to align the arrows on the handle mounting ears. Pull out and remove the handle.

   B. Remove the screws that secure the handle mounting ears, then remove the ears.

   C. Remove the screws that attach the rear bezel to the case, then remove the bezel.

D. Remove the bottom screw that grounds the case to the chassis.

WARNING

Be sure to install and tighten the grounding screw after replacing the cover.

E. Remove the cover by pulling it off towards the rear.

4. Disconnect any wires connected to the scanner card terminal blocks.
5. Install the scanner card in the multimeter.
6. Connect the line cord, and turn on the power to measure voltages (see following paragraph).

4.7.3 Troubleshooting procedure

Table 4-3 summarizes scanner card troubleshooting steps. Refer to the schematic diagram and component layout drawings at the end of Section 5 for component locations.

WARNING

Lethal voltages are present within the Model 2001. Some of the procedures may expose you to hazardous voltages. Observe standard safety precautions for dealing with live circuits. Failure to do so could result in personal injury or death.

CAUTION

Observe the following precautions when troubleshooting or repairing the scanner card:

1. **To avoid contamination, which could degrade card performance, always handle the card only by the side edges and covers. Do not touch edge connectors, board surfaces, or components on the card. Also, do not touch areas adjacent to electrical contacts on connectors.**
2. **Use care when removing relays from the PC board to avoid pulling traces away from the circuit board. Before attempting to remove a relay, use an**

appropriate de-soldering tool, such as a solder sucker, to clear each mounting hole completely free of solder. Each relay pin must be free to move in its mounting hole before removal. Also, make certain that no burrs are present on the ends of the relay pins.

3. **If the bottom shield must be replaced, make sure that the overlay, which contains warning messages, is also replaced.**
4. **Removing the isothermal block will damage the conductive RTV adhesive. The RTV adhesive must be replaced if the isothermal block is removed.**

4.8 Scanner card modification

Channels 5 and 10 include 120Ω resistors in series with the HI and LO terminals in order to avoid possible card damage should the high-speed multiplexing, ratio, or delta modes be inadvertently selected. (Damage may occur because break-before-make operation for channels 5 and 10 cannot be guaranteed when the high-speed scanning modes of the Model 2001 Multimeter are selected). These resistors can be removed and replaced with jumper wires in cases where the nominal 240Ω path resistance may affect signals switched through channels 5 and 10.

CAUTION

Use extreme care after replacing current-limiting resistors with jumper wires. External sources connected to channels 5 and 10 should be current-limiting to a maximum current of 1A, and the ratio, delta, and high-speed multiplexing modes of the Model 2001 Multimeter should not be used with the Model 2001-TCSCAN.

Figure 4-10 shows the location of the factory-installed current-limiting resistors. R152 and R153 provide current limiting for channel 5, while R154 and R155 perform the same function for channel 10. To make the modification, simply unsolder the current-limiting resistors, then solder jumpers wires in their places. Jumper part number J-3 may be ordered directly from Keithley Instruments, Inc.

NOTE

Observe the soldering and cleaning precautions discussed in paragraph 4.2.2 when making board modifications. Circuit board contamination may degrade card performance.

Table 4-3
Troubleshooting procedure

Step	Item/component	Required condition	Comments
1	Digital ground P1034, pin 1, 3, 5		All voltages referenced to digital ground.
2	P1034, pin 9	+5VDC	Card power supply voltage.
3	U101, pin 2	CLOCK pulses	Serial clock pulses.
4	U101, pin 3	DATA pulses	Serial data pulses.
5	U101, pin 7	STROBE pulse	End of relay update sequence.
6	U101-U103, pins 10-18	Low when relay state is changed. High when relay is not changing state.	Relay driver outputs.
7	U105, pin 2	+54.63mV @ 0°C, or +59.23mV @ +23°C	Reference junction output (see paragraph 4.3.4).

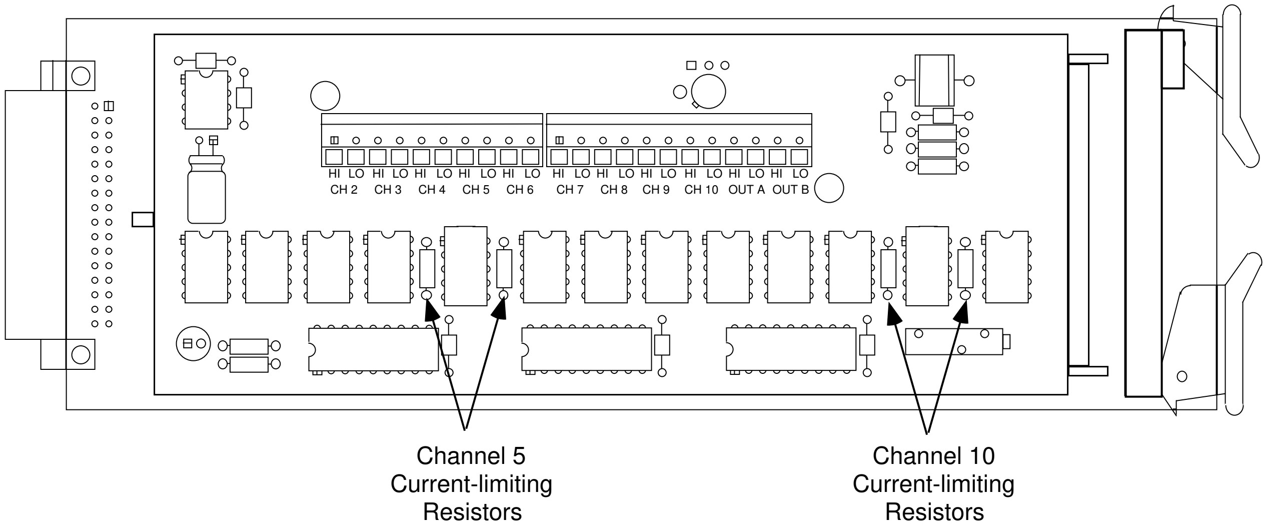
HI LO HI LO HI LO HI LO HI LO
CH 2 CH 3 CH 4 CH 5 CH 6
HI LO HI LO HI LO HI LO HI LO HI LO
CH 7 CH 8 CH 9 CH 10 OUT A OUT B
Channel 5 Current-limiting Resistors
Channel 10 Current-limiting Resistors

Figure 4-10
Current-limiting resistor locations

5

Replaceable Parts

5.1 Introduction

This section contains replacement parts information, schematic diagram, and component layout drawing for the Model 2001-TCSCAN.

5.2 Parts list

A parts list for the scanner card is included in a table integrated with schematic diagram and component layout drawing for the board. Parts are listed alphabetically in order of circuit designation.

5.3 Ordering information

To place an order, or to obtain information concerning replacement parts, contact your Keithley representative or the factory (see inside front cover for addresses). When ordering parts, be sure to include the following information:

- Card model number (2001-TCSCAN)
- Card serial number
- Part description
- Circuit description, if applicable
- Keithley part number

5.4 Factory service

If the card is to be returned to Keithley Instruments for repair, perform the following:

- Call the Instruments Division Repair Department at 1-800-552-1115 for a Return Material Authorization (RMA) number.
- Complete the service form at the back of this manual, and include it with the card.
- Carefully pack the card in the original packing carton.
- Write ATTENTION REPAIR DEPT and the RMA number on the shipping label.

NOTE: It is not necessary to return the Model 2001 Multimeter with the card.

5.5 Component layout and schematic diagram

A component layout drawing and schematic diagram are included on the following pages integrated with the parts list for the Model 2001-TCSCAN.

Table 5-1
Electrical parts

Circuit desig.	Description	Part number
C101-103,105,106,108,109	CAP,.1UF,20%,50V,CERAMIC	C-365-.1
C104	CAP, 10UF, 20%, 50V, ALUM ELEC	C-489-10
C107	CAP,100UF,20%,25V,ALUM ELEC	C-413-100
E104	SURGE ARRESTOR CG2-300L	SA-2
J1035	CONN, FEMALE 16-PIN	TE-118-10
J1036	CONN, FEMALE 12-PIN	TE-118-12
K101-111	RELAY, MINATURE (DPDT) TQ2E-L2-5V	RL-155
K112,113	RELAY, ULTRA-SMALL POLARIZED TF2E-5V	RL-149
P1034	CONN, FEMALE, DUAL 16-PIN	CS-455
R134	RES,1K,5%,1/4W,COMPOSITION OR FILM	R-76-1K
R147	RES,4.7K,5%,1/4W,COMPOSITION OR FILM	R-76-4.7K
R148	RES,5.62K,1%,1/8W,METAL FILM	R-88-5.62K
R149	RES, 205, .1%, 1/10W, METAL FILM	R-263-205
R150	RES,100,5%,1/4W,COMPOSITION OR FILM	R-76-100
R151	POT,10K,10%,.75W,NON-WIREWOUND	RP-89-10K
R152-155	RES, 120, 5%, 1/4W, COMPOSITION OR FILM	R-76-120
U101-103	IC, 8-BIT SERIAL-IN LATCH DRIVER,5841A	IC-536
U104	IC,SUPPLY VOLTAGE SUPERVISOR,TL7705AC	IC-602
U105	IC, TEMPERATURE TRANSDUCER, AD590MH	IC-892

Table 5-2
Mechanical parts

Description	Part Number
CLIP, STRAIN RELIEF	2001-351A
COPPER ISOTHERMAL BLOCK	2001-TCSCAN-302A
STRIP, POLYURETHANE	2001-345-1B
STRAIN RELIEF, TOP	2001-349A
SHIELD, TOP	1801-307A
STRAIN RELIEF, BOTTOM	2001-344B
BOTTOM SHIELD	2001-TCSCAN-304A
CARD EJECTOR, PLASTIC	FA-237
SLEEVED BANANA PLUG TEST LEAD	CA-109A
CHIPLOC BAG STATIC SHIELDING	PO-13-1
OVERLAY, BOTTOM SHIELD	2001-TCSCAN-305A
THERMAL RTV	CE-16

A

Thermocouple Basics

A.1 Definitions

The following terms are defined as they relate to thermocouple circuits and thermocouple switching cards:

Cold junction — The junction that is held at a stable known temperature. Also known as the reference junction.

Hot junction — The junction of two dissimilar metals that is used to measure an unknown temperature. Also known as the measurement junction.

Isothermal block or cover — The metal block or cover that equalizes the temperature of thermocouple connections on a switching card.

Reference accuracy — The maximum error between sensor and channel inside the isothermal environment. Also known as temperature offset.

Reference channel — The channel that measures the temperature of the isothermal environment.

Reference output — The output signal that represents the temperature of the reference channel. Commonly specified by a temperature coefficient of µV/°C and an offset voltage in millivolts at 0°C.

A.2 Theory

A thermocouple is a junction formed between two dissimilar metals. If the temperature of the thermocouple junction connected to the Model 2001-TCSCAN is T, a voltage E is developed between leads A and B as shown in Figure A-1. When connected to a voltmeter, two more junctions (C and D) are formed with the meter terminals. The measured voltage is proportional to the difference between temperatures T and T_1.

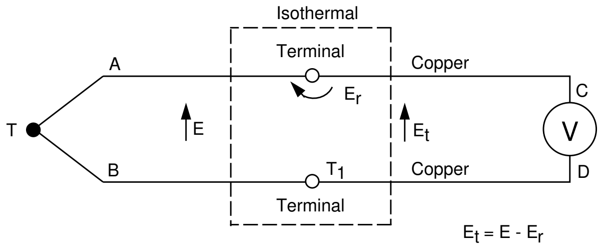

Figure A-1
Thermocouple measurement

To determine the difference, the thermoelectric properties of the thermocouple are needed. Data is available to determine the voltage versus temperature relationship based on a reference temperature (T_1) of 0°C. Thus, if the thermocouple-to-copper junctions were maintained at 0°C, it would be possible to determine T by referring to the Thermocouple Reference Tables. (See NIST Nomograph 125.) The tables list temperature as a function of the meter reading E_t. Since these junctions are not 0°C, a voltage E_r is introduced, where:

$$E_t = E - E_r$$

A.3 Measurement procedure

The temperature of a thermocouple junction is determined by the following summarized procedure:

- Measure the reference voltage (E_1).
- Calculate the reference temperature (T_1).
- Determine the reference correction voltage (E_r).
- Measure the thermocouple voltage (E_t).
- Calculate the thermocouple correction voltage (E).
- Determine the thermocouple temperature (T).

The complete step-by-step procedure follows:

1. Read the voltage (E_1) developed by the Model 2001-TC-SCAN reference junction. Assuming a temperature coefficient of +200µV/°C, and an offset voltage of +54.63mV at 0°C, convert the voltage reading to temperature (T_1) with the formula:

   $T_1 = (E_1 = 54.63\text{mV}) / 0.2\text{mV per °C}$

   T_1 represents the temperature of the Model 2001-TCSCAN isothermal connections.

2. Using the thermocouple lookup tables or the following formula, convert the temperature (T_1) from step 1 to a voltage. Use tables matching the type of thermocouple connected to the Model 2001-TCSCAN. E_r corresponds to the reference voltage that would result if an actual thermocouple were used as a reference junction.

   $E_r = a_0 + a_1T + a_2T^2 + a_3T^3 + a_4T^4$

3. Make a measurement of the voltage (E_t) developed by the thermocouple connected to the Model 2001-TCSCAN.
4. Add the reference voltage derived in step 2 to the thermocouple voltage measured in step 3.

   $E = E_r + E_t$

5. Convert the voltage sum (E) from step 4 to a temperature (T) using either thermocouple lookup tables or the formula:

   $T = a_0 + a_1E + a_2E^2 + a_3E^3 + a_4E^4$

   The values for a_0 through a_4 for the supported thermocouples are listed in tables located in Appendix B.

A.4 Measuring example

A measurement setup uses a Type J thermocouple. The voltage developed by the reference junction (channel 1) is 61.83mV. The voltage read from the thermocouple is 14476µV.

1. Find the temperature of the isothermal connections. The voltage from the reference sensor is 61.83mV.

   (61.83mV – 54.63mV) / 0.2mV per °C = 36°C

2. Using the appropriate formula or thermocouple lookup tables (see Table 6.3.2 of NIST Monograph 125), find the equivalent voltage developed by a Type J thermocouple at 36°C. This voltage is found to be 1849.1µV. The formula shown in step 2 above would yield 1849.085µV.

3. The voltage developed by the thermocouple is measured as 14476µV.

4. The sum of the voltage is 14476 + 1849.1, or 16325.1µV.

5. Using the appropriate formula or thermocouple lookup tables (see Table A6.2.1 of NIST Monograph 125), find the temperature for a Type J thermocouple corresponding to 16325.1µV. This temperature is 300.0°C. The formula shown in step 5 above would yield 299.995°C.

NOTE

It is not necessary to make these calculations when using the Model 2001 Multimeter, which performs temperature conversion automatically.

B

Thermocouple Conversion Tables

The following thermocouple conversion tables are included as a convenience for those who wish to use the Model 2001-TCSCAN to make thermocouple temperature measurements with other instruments. Note that the Model 2001 Multimeter does not use these tables for temperature conversion but relies instead on piecewise linear analysis to provide more accurate temperature measurements.

Table B-1
NIST Quartic Coefficients for Types S, R, B, E, J, K, and T

Type S Thermocouples[1] Temperature Range (°C)	**a_0**		**a_1**		**a_2**		**a_3**		**a_4**		**Error Range (µV)**
Quartic Equation	**Argument**	**Exp.**	**Argument**	**Exp.**	**Argument**	**Exp.**	**Argument**	**Exp.**	**Argument**	**Exp.**	**Exact-Approx.**
-50 to 900			5.5439639	+0	1.0103667	-2	-1.0944499	-5	4.9628963	-9	-7 to 14
0 to 1100			5.8791282	+0	7.9098118	-3	-6.7450002	-6	2.5247577	-9	-16 to 12
0 to 1400			6.2516859	+0	5.8347856	-3	-3.4351369	-6	9.4022202	-10	-35 to 25
0 to 1650			6.5554932	+0	4.4519908	-3	-1.6378513	-6	2.4140360	-10	-55 to 35
0 to 1768			6.6834421	+0	3.9334084	-3	-1.0384046	-6	3.4244511	-11	-60 to 35
400 to 1100	-3.8051591	+2	8.7228147	+0	6.2984807	-4	9.0526670	-7	-2.9241601	-10	-.7 to .5
400 to 1400	-5.2412524	+2	9.5827994	+0	-1.2077351	-3	2.5723104	-6	-8.3681057	-10	-1.6 to 1.5
400 to 1650	-5.0061921	+2	9.4591354	+0	-9.7986687	-4	2.3967559	-6	-7.8837971	-10	-1.8 to 1.9
1050 to 1400	1.4352322	+3	2.9873073	+0	6.9951678	-3	-1.8986036	-6	6.5006637	-11	-.05 to .05
1050 to 1650	1.3054176	+3	3.4129348	+0	6.4741403	-3	-1.6163524	-6	7.9103746	-12	-.05 to .05
1400 to 1550	1.8695088	+2	6.4091373	+0	3.4664812	-3	-2.7553724	-7	-2.1606150	-10	-.05 to .05
1400 to 1650	1.0863331	+3	3.9952876	+0	5.8939317	-3	-1.3595782	-6	-3.4675031	-11	-.05 to .05
1400 to 1768	-7.4180405	+4	2.0043202	+2	-1.8607781	-1	8.1899566	-5	-1.3556030	-8	-1.0 to 1.3
1666 to 1768	8.2703440	+4	-1.3532278	+2	8.0243878	-2	-1.0633404	-5	-1.7212343	-9	-.05 to .05
Reference Junction Correction											
0 to 50			5.3994446	+0	1.2467754	-2	1.9934168	-5			-0.01 to +0.01

[1] Quartic approximations to the data as a function of temperature (°C) in selected temperature ranges.
The expansion is of the form $E = a_0 + a_1T + a_2T^2 + a_3T^3 + a_4T^4$ where E is in microvolts and T is in degrees Celsius.

Type S Thermocouples[2] Temperature Range (°C)	**a_0**		**a_1**		**a_2**		**a_3**		**a_4**		**Error Range (°C)**
Quartic Equation	**Argument**	**Exp.**	**Argument**	**Exp.**	**Argument**	**Exp.**	**Argument**	**Exp.**	**Argument**	**Exp.**	**Exact-Approx.**
-50 to 900			1.6414048	-1	-2.0241757	-5	2.7849728	-9	-1.4172102	-13	-11 to 3
0 to 1100			1.5445376	-1	-1.3349067	-5	1.3626587	-9	-5.3270847	-14	-3 to 6
0 to 1400			1.4713897	-1	-9.0783455	-6	6.5660913	-10	-1.8499175	-14	-5 to 9
0 to 1650			1.4260554	-1	-7.0073775	-6	3.8981279	-10	-8.3047780	-15	-6 to 11
0 to 1768			1.4087955	-1	-6.3195007	-6	3.1267454	-10	-5.7422562	15	-6 to 12
400 to 1100	4.1137317	+1	1.1599785	-1	-1.8642979	-6	1.2643267	-11	8.4828836	-16	-.05 to .07
400 to 1400	4.4507790	+1	1.1373998	-1	-1.3349811	-6	-3.9224680	-11	2.6563405	15	-.08 to .08
400 to 1650	4.1670535	+1	1.1543356	-1	-1.6782780	-6	-1.0845801	-11	1.8379726	-15	-.2 to .2
1050 to 1400	-3.0938374	+1	1.4106560	-1	-4.9794442	-6	1.7334256	-10	-1.9262160	15	-.003 to .003
1050 to 1650	1.2226507	+1	1.2706383	-1	-3.2873314	-6	8.3038098	-11	-1.3019379	-16	-.010 to .010
1400 to 1550	1.3866867	+2	9.3486676	-2	4.8592708	-8	-6.3885209	-11	2.2896541	-15	-.0005 to .0005
1400 to 1650	1.3923740	+2	9.3267401	-2	7.7266682	-8	-6.5458208	-11	2.3208160	-15	-.0005 to .0005
1400 to 1768	4.5133695	+3	-1.0046437	+0	1.0322002	-4	-4.3637046	-9	6.9361610	-14	-.13 to .10
1666 to 1768	2.3131446	+4	-5.4122671	+0	4.9347196	-4	-1.9681943	-8	2.9430179	-13	-.0005 to .0005

[2] Quartic approximations to the data as a function of voltage in selected temperature ranges (°C).
The expansion is of the form $T = a_0 + a_1E + a_2E^2 + a_3E^3 + a_4E^4$ where E is in microvolts and T is in degrees Celsius.

Type R Thermocouples[3] **Temperature Range (°C)**	**a_0**		**a_1**		**a_2**		**a_3**		**a_4**		**Error Range (μV)**
Quartic Equation	**Argument**	**Exp.**	**Argument**	**Exp.**	**Argument**	**Exp.**	**Argument**	**Exp.**	**Argument**	**Exp.**	**Exact-Approx.**
-50 to 900			5.4295008	+0	1.1446885	-2	-1.1295306	-5	5.0020496	-9	-7 to 15
0 to 1100			5.7622558	+0	9.2715271	-3	-7.1346883	-6	2.5877458	-9	-16 to 12
0 to 1400			6.1429772	+0	7.1515857	-3	-3.7539447	-6	9.6963832	-10	-35 to 25
0 to 1650			6.4615269	+0	5.7010917	-3	-1.8683292	-6	2.3636365	-10	-55 to 35
0 to 1768			6.5962120	+0	5.1559203	-3	-1.2385309	-6	1.8827643	-11	-65 to 35
400 to 1100	-4.0674108	+2	8.7490294	+0	1.7115155	-3	7.5039035	-7	-3.0096280	-10	-.4 to .5
400 to 1400	-5.6047484	+2	9.6731111	+0	-2.6994046	-4	2.5536988	-6	-8.9155491	-10	-1.7 to 1.6
400 to 1650	-5.4505828	+2	9.5942872	+0	-1.2813352	-4	2.4468512	-6	-8.6286756	-10	-2.1 to 1.8
1050 to 1400	1.6618159	+3	2.3048526	+0	8.7635426	-3	-2.3016819	-6	7.4284923	-11	-.05 to .05
1050 to 1650	1.5132838	+3	2.7958847	+0	8.1571403	-3	-1.9701159	-6	6.5568964	-12	-.05 to .05
1400 to 1550	2.4008703	+3	4.1604579	-1	1.0549178	-2	-3.0383621	-6	1.8540516	-10	-.05 to .05
1400 to 1650	1.5787334	+3	2.6321144	+0	8.3100314	-3	-2.0332036	-6	1.6260416	-11	-.05 to .05
1400 to 1768	-7.1904948	+4	1.9442383	+2	-1.7913090	-1	7.9264764	-5	-1.3187245	-8	-1.0 to 1.3
1666 to 1768	8.8532076	+4	-1.5014129	+2	9.5376167	-2	-1.6644901	-5	-8.3062870	-10	-.05 to .05
Reference Junction Correction											
0 to 50			5.2891411	+0	1.3844426	-2	-2.0889531	-5			-0.01 to +0.01

[3] Quartic approximations to the data as a function of temperature (°C) in selected temperature ranges.
The expansion is of the form $E = a_0 + a_1T + a_2T^2 + a_3T^3 + a_4T^4$ where E is in microvolts and T is in degrees Celsius.

Type R Thermocouples[4] **Temperature Range (°C)**	**a_0**		**a_1**		**a_2**		**a_3**		**a_4**		**Error Range (°C)**
Quartic Equation	**Argument**	**Exp.**	**Argument**	**Exp.**	**Argument**	**Exp.**	**Argument**	**Exp.**	**Argument**	**Exp.**	**Exact-Approx.**
-50 to 900			1.6251434	-1	-2.0454379	-5	2.5404935	-9	-1.1767904	-13	-13 to 3
0 to 1100			1.5239494	-1	-1.3755675	-5	1.2610922	-9	-4.4281251	-14	-4 to 7
0 to 1400			1.4441607	-1	-9.5014952	-6	6.2073358	-10	-1.5622497	-14	-6 to 10
0 to 1650			1.3944190	-1	-7.4485484	-6	3.8266182	-10	-7.4517277	-15	-7 to 13
0 to 1768			1.3752883	-1	-6.7651171	-6	3.1420473	-10	-5.4254872	-15	-7 to 14
400 to 1100	4.5509556	+1	1.1284875	-1	-2.8603978	-6	8.5173702	-11	-1.1440038	-15	-.04 to .04
400 to 1400	4.9160016	+1	1.1054589	-1	-2.3559046	-6	3.9276248	-11	3.3369324	-16	-.08 to .09
400 to 1650	4.8343651	+1	1.1098270	-1	-2.4353890	-6	4.5164488	-11	1.8172612	-16	-.10 to .12
1050 to 1400	-4.1134459	+0	1.2738464	-1	-4.3132296	-6	1.3863582	-10	-1.5283798	-15	-.002 to .002
1050 to 1650	3.7487318	+1	1.1519304	-1	-2.9827002	-6	7.4538667	-11	-3.7809957	-16	-.011 to .011
1400 to 1550	8.0559850	+1	1.0442877	-1	-1.9827500	-6	3.3603790	-11	2.4513433	-16	-.0005 to .0005
1400 to 1650	1.4180146	+2	9.0181346	-2	-7.4068329	-7	-1.4487255	-11	9.4290495	-16	-.0005 to .0005
1400 to 1768	3.1758093	+3	-5.8922431	-1	5.6190639	-5	-2.1303241	-9	3.0369250	-14	-.11 to .08
1666 to 1768	1.2883437	+4	-2.6747958	+0	2.2334214	-4	-8.0565860	-9	1.0882779	-13	-.0007 to .0007

[4] Quartic approximations to the data as a function of voltage in selected temperature ranges (°C).
The expansion is of the form $T = a_0 + a_1E + a_2E^2 + a_3E^3 + a_4E^4$ where E is in microvolts and T is in degrees Celsius.

Type B Thermocouples[5] Temperature Range (°C)	**a_0**		**a_1**		**a_2**		**a_3**		**a_4**		**Error Range (μV)**
Quartic Equation	**Argument**	**Exp.**	**Argument**	**Exp.**	**Argument**	**Exp.**	**Argument**	**Exp.**	**Argument**	**Exp.**	**Exact-Approx.**
0 to 900			-2.3614224	-1	5.7496551	-3	-5.6339756	-7	-1.1808558	-10	-.22 to .14
0 to 1100			-2.3893338	-1	5.7684447	-3	-5.9963692	-7	-9.7041131	-11	-.18 to .20
0 to 1400			-2.3476301	-1	5.7480761	-3	-5.7165679	-7	-1.0838193	-10	-.7 to 1.0
0 to 1650			-1.9185893	-1	5.5578879	-3	-3.3057924	-7	-2.0018428	-10	-4 to 5
0 to 1820			-1.3749133	-1	5.3446673	-3	-9.1094186	-8	-2.8098361	-10	-8 to 9
400 to 1100	1.3740347	+1	-3.2914888	-1	5.9766638	-3	-8.0141311	-7	-2.7203972	-11	-.05 to .05
400 to 1400	-2.5321108	+1	-9.9736579	-2	5.4976533	-3	-3.7806912	-7	-1.6156824	-10	-.5 to .5
400 to 1650	-1.1708354	+2	3.9860894	-1	4.5539656	-3	3.6623964	-7	-3.6969100	-10	-2.0 to 1.8
1050 to 1400	-9.8446259	+2	3.3670688	+0	8.2282215	-4	2.4061224	-6	-7.7901142	-10	-.05 to .05
1050 to 1650	-1.3702395	+3	4.6252371	+0	-7.0976836	-4	3.2325686	-6	-9.4548852	-10	-.05 to .05
1400 to 1550	-4.7644591	+2	2.2890832	+0	1.5749253	-3	2.2417410	-6	-7.8471224	-10	-.05 to .05
1400 to 1650	-6.4878929	+2	2.7380621	+0	1.1375302	-3	2.4305578	-6	-8.1518033	-10	-.05 to .05
Reference Junction Correction											
0 to 50			-2.4673839	-1	5.9050303	-3	-1.2267180	-6			-0.01 to +0.01

[5] Quartic approximations to the data as a function of temperature (°C) in selected temperature ranges.
The expansion is of the form $E = a_0 + a_1T + a_2T^2 + a_3T^3 + a_4T^4$ where E is in microvolts and T is in degrees Celsius.

Type B Thermocouples[6] Temperature Range (°C)	**a_0**		**a_1**		**a_2**		**a_3**		**a_4**		**Error Range (°C)**
Quartic Equation	**Argument**	**Exp.**	**Argument**	**Exp.**	**Argument**	**Exp.**	**Argument**	**Exp.**	**Argument**	**Exp.**	**Exact-Approx.**
0 to 900			8.9244743	-1	-5.7447033	-4	1.8053618	-7	-1.9719121	-11	-30 to 75
0 to 1100			7.2874066	-1	-3.1771931	-4	6.8254996	-8	-5.1002233	-12	-35 to 90
0 to 1400			5.7822214	-1	-1.6039309	-4	2.2187592	-8	-1.0678514	-12	-45 to 110
0 to 1650			4.9929130	-1	-1.0349686	-4	1.0792281	-8	-3.9111456	-13	-50 to 120
0 to 1820			4.6255054	-1	-8.2176262	-5	7.3717195	-9	-2.2913665	-13	-50 to 130
400 to 1100	1.8946288	+2	3.0966136	-1	-5.8100680	-5	8.2483967	-9	-4.7591774	-13	-.09 to 1.0
400 to 1400	2.0949015	+2	2.7222162	-1	-3.6930932	-5	3.6830239	-9	-1.4483702	-13	-3 to 3
400 to 1650	2.2354664	+2	2.4988761	-1	-2.7160312	-5	2.1299660	-9	-6.4220755	-14	-5 to 5
1050 to 1400	3.2188156	+2	1.8282378	-1	-1.1561743	-5	6.4320083	-10	-1.4544375	-14	-.003 to .003
1050 to 1650	3.4418084	+2	1.7031473	-1	-8.9696912	-6	4.0789445	-10	-6.6410259	-15	-.025 to .020
1400 to 1550	3.7140306	+2	1.5828913	-1	-7.0050689	-6	2.6714849	-10	-2.9082072	-15	-.001 to .001
1400 to 1650	3.9253848	+2	1.4979551	-1	-5.7276293	-6	1.8192801	-10	-7.8042686	-16	-.001 to .001

[6] Quartic approximations to the data as a function of voltage in selected temperature ranges (°C).
The expansion is of the form $T = a_0 + a_1E + a_2E^2 + a_3E^3 + a_4E^4$ where E is in microvolts and T is in degrees Celsius.

Type E Thermocouples[7] **Temperature Range (°C)**	**a_0**		**a_1**		**a_2**		**a_3**		**a_4**		**Error Range (μV)**
Quartic Equation	**Argument**	**Exp.**	**Argument**	**Exp.**	**Argument**	**Exp.**	**Argument**	**Exp.**	**Argument**	**Exp.**	**Exact-Approx.**
-270 to 0			5.9287179	+1	7.0983783	-2	5.2421843	-5	3.8137875	-7	-5 to 5
-200 to 0			5.8754764	+1	5.7443085	-2	-5.0637772	-5	1.3960921	-7	-.5 to .4
-200 to 800			5.8043714	+1	5.6118501	-2	-5.9506584	-5	2.2327737	-8	-60 to 30
-20 to -500			5.8318735	+1	5.4292960	-2	-5.6288941	-5	2.0825828	-8	-8 to 4
0 to 400			5.8327591	+1	5.3761106	-2	-5.2870656	-5	1.5352840	-8	-3 to 4
0 to 1000			5.8734597	+1	5.0789891	-2	-4.7821793	-5	1.4659118	-8	-18 to 17
400 to 1000	-8.5384268	+2	6.5022632	+1	3.4354900	-2	-2.9769494	-5	7.6039401	-9	-2 to 2.5
600 to 800	-1.3839633	+3	6.7211126	+1	3.1669230	-2	-2.9237913	-5	8.1514671	-9	-.03 to .03
850 to 1000	-5.1503130	+4	-1.6691278	+2	4.1877018	-1	-3.1228607	-4	8.5283044	-8	-.06 to .06
Reference Junction Correction											
0 to 50			5.8637565	+1	4.6720025	-2	-1.4438022	-5			-.12 to +.24

[7] Quartic approximations to the data as a function of temperature (°C) in selected temperature ranges.
The expansion is of the form $E = a_0 + a_1T + a_2T^2 + a_3T^3 + a_4T^4$ where E is in microvolts and T is in degrees Celsius.

Type E Thermocouples[8] **Temperature Range (°C)**	**a_0**		**a_1**		**a_2**		**a_3**		**a_4**		**Error Range (°C)**
Quartic Equation	**Argument**	**Exp.**	**Argument**	**Exp.**	**Argument**	**Exp.**	**Argument**	**Exp.**	**Argument**	**Exp.**	**Exact-Approx.**
-270 to 0			2.8168878	-3	-8.5940057	-6	-1.4930918	-9	-8.7987588	-14	-9 to 6
-200 to 0			1.5726646	-2	-1.2102152	-6	-1.9577799	-10	-1.6696298	-14	-.3 to .3
-200 to 800			1.8432856	-2	-3.2311582	-7	6.9795810	-12	-5.1106852	-17	-8 to 7
-20 to 500			1.6970287	-2	-2.0830603	-7	4.6512717	-12	-4.1805785	-17	-.18 to .12
0 to 400			1.7022525	-2	-2.2097240	-7	5.4809314	-12	-5.7669892	-17	-.05 to .04
0 to 1000			1.6410783	-2	-1.3560189	-7	1.8600342	-12	-8.5537337	-18	-.9 to 1.4
400 to 1000	1.9669452	+1	1.4207735	-2	-5.1844510	-8	5.6361365	-13	-1.5646343	-18	-.03 to .03
600 to 800	2.5192188	+1	1.3909529	-2	-4.7201133	-8	5.5638718	-13	-1.7775228	-18	-.0005 to .0005
850 to 1000	-7.1102114	+2	5.6554599	-2	-9.7013068	-7	9.3938146	-12	-3.3333675	-17	-.001 to .001

[8] Quartic approximations to the data as a function of voltage in selected temperature ranges (°C).
The expansion is of the form $T = a_0 + a_1E + a_2E^2 + a_3E^3 + a_4E^4$ where E is in microvolts and T is in degrees Celsius.

Type J Thermocouples[9] Temperature Range (°C)	**a_0**		**a_1**		**a_2**		**a_3**		**a_4**		**Error Range (μV)**
Quartic Equation	**Argument**	**Exp.**	**Argument**	**Exp.**	**Argument**	**Exp.**	**Argument**	**Exp.**	**Argument**	**Exp.**	**Exact-Approx.**
-200 to 0			5.0408743	+1	3.2009063	-2	-6.3493968	-5	2.5174022	-7	-.2 to .3
-200 to 760			4.9502533	+1	3.2898022	-2	-6.9936031	-5	5.1112729	-8	-100 to 80
-200 to 1200			4.7062907	+1	2.5522650	-2	-2.2198295	-5	7 1373907	-9	-500 to 600
-20 to 500			5.0465304	+1	2.8062596	-2	-6.5666305	-5	5.3587106	-8	-1.5 to 3.0
0 to 400			5.0452399	+1	2.8409137	-2	-6.7556436	-5	5.6382040	-8	-.8 to .5
0 to 760			5.1258213	+1	2.0040854	-2	-4.2235982	-5	3.2819408	-8	-24 to 36
0 to 1200			5.5861877	+1	-1.4207954	-2	3.1325181	-5	-1.5023710	-8	-210 to 160
400 to 760	-5.7931005	+3	9.7718575	+1	-1.1658430	-1	1.3184454	-4	-4.8218788	-8	-2.5 to 2.8
400 to 1200	7.1127371	+3	1.8969007	+1	5.3862730	-2	-2.2171472	-5	1.8445398	-10	-110 to 100
600 to 760	-2.5724435	+4	2.2157898	+2	-4.0418097	-1	4.2749984	-4	1.6174242	-7	-.1 to .1
760 to 1200	3.9064962	+4	-1.4765017	+2	3.6470921	-1	-2.7029005	-4	7.2113090	-8	-11 to 11
Reference Junction Correction											
0 to 50			5.0373743	+1	3.0167011	-2	-7.4293513	-5			-.06 to +.06

---

[9] Quartic approximations to the data as a function of temperature (°C) in selected temperature ranges.
The expansion is of the form $E = a_0 + a_1T + a_2T^2 + a_3T^3 + a_4T^4$ where E is in microvolts and T is in degrees Celsius.

Type J Thermocouples[10] Temperature Range (°C)	**a_0**		**a_1**		**a_2**		**a_3**		**a_4**		**Error Range (°C)**
Quartic Equation	**Argument**	**Exp.**	**Argument**	**Exp.**	**Argument**	**Exp.**	**Argument**	**Exp.**	**Argument**	**Exp.**	**Exact-Approx.**
-200 to 0			1.8843850	-2	-1.2029733	-6	-2.5278593	-10	-2.5849263	-14	-.4 to .5
-200 to 760			2.1155170	-2	-3.3513149	-7	1.2443997	-11	-1.5227150	-16	-6 to 7
-200 to 1200			2.1676850	-2	-2.1844464	-7	3.9094347	-12	-2.4303017	-17	-14 to 10
-20 to 500			1.9745056	-2	-1.8094256	-7	7.8777919	-12	-1.1897222	-16	-.07 to .06
0 to 400			1.9750953	-2	-1.8542600	-7	8.3683958	-12	-1.3280568	-16	-.03 to .05
0 to 760			1.9323799	-2	-1.0306020	-7	3.7084018	-12	-5.1031937	-17	-.9 to .7
0 to 1200			1.8134974	-2	-5.6495930	-8	-2.4644023	-12	2.1141718	-17	-3 to 4
400 to 760	9.2808351	+1	5.4463817	-3	6.5254537	-7	-1.3987013	-11	9.9364476	-17	-.03 to .03
400 to 1200	-1.1075293	+2	2.8651303	-2	-2.9758175	-7	2.5945419	-12	-4.9012035	-18	-1.3 to 1.6
600 to 760	1.8020713	+2	-4.5284199	-3	1.0769294	-6	-2.1962321	-11	1.5521511	-16	-.001 to .001
760 to 1200	-6.3828680	+2	7.4068749	-2	-1.7177773	-6	2.1771293	-11	-9.9502571	-17	-.15 to .11

---

[10] Quartic approximations to the data as a function of voltage in selected temperature (°C).
The expansion is of the form $T = a_0 + a_1E + a_2E^2 + a_3E^3 + a_4E^4$ where E is in microvolts and T is in degrees Celsius.

Type K Thermocouples[11] Temperature Range (°C)	**a_0**		**a_1**		**a_2**		**a_3**		**a_4**		**Error Range (μV)**
Quartic Equation	**Argument**	**Exp.**	**Argument**	**Exp.**	**Argument**	**Exp.**	**Argument**	**Exp.**	**Argument**	**Exp.**	**Exact-Approx.**
-270 to 0			3.9575518	+1	3.1063355	-2	-9.1607995	-5	3.0006628	-8	-1.1 to 1.2
-200 to 0			3.9478446	+1	2.8256412	-2	-1.1488433	-4	-2.8153447	-8	-.08 to .05
-200 to 800			3.6762217	+1	2.4544587	-2	-4.3081993	-5	2.5127588	-8	-180 to 200
-20 to 500			4.0999640	+1	-3.2619221	-3	8.5714137	-6	-1.6912373	-9	-25 to 45
0 to 400			4.0981103	+1	-1.5992510	-4	-1.2525700	-5	3.2784725	-8	-25 to 20
0 to 1370			3.9443859	+1	5.8953822	-3	-4.2015132	-6	1.3917059	-10	-60 to 110
400 to 1000	1.3223524	+3	3.0191663	+1	2.7508912	-2	-2.4734437	-5	6.9799332	-9	-.9 to 1.4
400 to 1370	-3.5456236	+1	3.8349319	+1	9.9993329	-3	-8.7444446	-6	1.7108618	-9	-12 to 11
600 to 800	2.1326086	+3	2.5608012	+1	3.7091744	-2	-3.3517324	-5	9.9607405	-9	-.05 to .07
850 to 1000	-9.0373549	+2	4.0577145	+1	9.5092149	-3	-1.0989249	-5	3.0753213	-9	-.05 to .03
1050 to 1150	-2.5972816	+3	5.2075276	+1	-1.4576419	-2	9.4854151	-6	-3.1178779	-9	-.05 to .05
Reference Junction Correction											
0 to 50			3.9448872	+1	2.4548362	-2	-9.0918433	-5			-.06 to +.14

---

[11] Quartic approximations to the data as a function of temperature (°C) in selected temperature ranges.
The expansion is of the form $E = a_0 + a_1T + a_2T^2 + a_3T^3 + a_4T^4$ where E is in microvolts and T is in degrees Celsius.

Type K Thermocouples[12] Temperature Range (°C)	**a_0**		**a_1**		**a_2**		**a_3**		**a_4**		**Error Range (°C)**
Quartic Equation	**Argument**	**Exp.**	**Argument**	**Exp.**	**Argument**	**Exp.**	**Argument**	**Exp.**	**Argument**	**Exp.**	**Exact-Approx.**
-270 to 0			1.2329875	-2	-1.4434305	-5	-4.2824995	-9	-4.2028679	-13	-11 to 8
-200 to 0			2.3783697	-2	-2.4382217	-6	-6.8203073	-10	-9.4854031	-14	-.5 to .5
-200 to 800			2.8346886	-2	-5.8008526	-7	2.5720615	-11	-3.6813679	-16	-8 to 10
-20 to 500			2.4363851	-2	5.6206931	-8	-3.8825620	-12	3.9120208	-17	-1.2 to .6
0 to 400			2.4383248	-2	9.7830251	-9	3.6276965	-12	-2.5756438	-16	-.5 to .6
0 to 1370			2.5132785	-2	-6.0883423	-8	5.5358209	-13	9.3720918	-18	-2.4 to 1.2
400 to 1000	-2.4707112	+1	2.9465633	-2	-3.1332620	-7	6.5075717	-12	-3.9663834	-17	-.02 to .02
400 to 1370	6.2300671	+0	2.4955374	-2	-7.8788333	-8	1.3269743	-12	1.5580541	-18	-.3 to .3
600 to 800	-3.9480992	+1	3.1425797	-2	-4.0905633	-7	8.5482602	-12	-5.5696636	-17	-.001 to .001
850 to 1000	-3.1617495	+0	2.7115517	-2	-2.1941995	-7	4.8782826	-12	-2.9316611	-17	-.0012 to .0012
1050 to 1150	2.3615582	+2	1.1066277	-3	8.2516607	-7	-1.3558849	-11	9.1638500	-17	-.001 to .001

---

[12] Quartic approximations to the data as a function of voltage in selected temperature ranges (°C).
The expansion is of the form $T = a_0 + a_1E + a_2E^2 + a_3E^3 + a_4E^4$ where E is in microvolts and T is in degrees Celsius.

Type T Thermocouples[13] Temperature Range (°C)	**a_0**		**a_1**		**a_2**		**a_3**		**a_4**		**Error Range (μV)**
Quartic Equation	**Argument**	**Exp.**	**Argument**	**Exp.**	**Argument**	**Exp.**	**Argument**	**Exp.**	**Argument**	**Exp.**	**Exact-Approx.**
-270 to 0			3.9439919	+1	6.2407452	-2	8.0773568	-5	2.6845647	-7	-9 to 7
-200 to 0			3.8749056	+1	4.5149809	-2	4.7759448	-5	-2.5773959	-8	-.14 to .13
-200 to 400			3.8621703	+1	4.5433050	-2	-3.4731838	-5	1.4661300	-8	-7 to 3.5
0 to 400			3.8468407	+1	4.6651731	-2	-3.7375793	-5	1.5999833	-8	-.9 to .9
Reference Junction Correction											
0 to 50			3.8709457	+1	3.7085566	-2	5.6495520	-5			-.1 to .1

[13] Quartic approximations to the data as a function of temperature (°C) in selected temperature ranges.
The expansion is of the form $E = a_0 + a_1T + a_2T^2 + a_3T^3 + a_4T^4$ where E is in microvolts and T is in degrees Celsius.

Type T Thermocouples[14] Temperature Range (°C)	**a_0**		**a_1**		**a_2**		**a_3**		**a_4**		**Error Range (°C)**
Quartic Equation	**Argument**	**Exp.**	**Argument**	**Exp.**	**Argument**	**Exp.**	**Argument**	**Exp.**	**Argument**	**Exp.**	**Exact-Approx.**
-270 to 0			4.3553379	-3	-2.0325426	-5	-5.4720813	-9	-5.0865527	-13	-8 to 6
-200 to 0			2.3837090	-2	-2.9878839	-6	-7.1945810	-10	-1.0041943	-13	-.3 to .3
-200 to 400			2.6792411	-2	-1.0370271	-6	6.1330327	-11	-1.3988385	-15	-6 to 5
0 to 400			2.5661297	-2	-6.1954869	-7	2.2181644	-11	-3.5500900	-16	-.15 to .17

[14] Quartic approximations to the data as a function of temperature (°C) in selected temperature ranges.
The expansion is of the form $T = a0 + a_1E + a_2E^2 + a_3E^3 + a_4E^4$ where E is in microvolts and T is in degrees Celsius.

Index

B

Basic front panel operation 3-18
Block diagram 4-13

C

Calibration 4-10
Calibration with thermistor probe 4-10
Calibration with thermocouple wire 4-11
Card configuration 2-2
Card connections and installation 2-1
Card connectors 2-3
Card installation and removal 2-10
Channel resistance 3-31
Closing and opening channels 3-9
Closing channels 3-9
Component layout and schematic diagram 5-1
Configure channels (CONFIG-CHAN) 3-4
Configure stepping and scanning 3-18
Connections 2-1
Contact potential tests 4-5

D

Dressing leads 2-4

E

Environmental conditions 4-2

F

Factory service 5-1
Features 1-1
Front panel scanner controls 3-2
Front panel scanning 3-9

G

General information 1-1
Ground loops 3-32

H

Handling and cleaning precautions 4-1
Handling precautions 1-2, 2-1, 4-1

I

IEEE-488 bus scanner commands 3-6
IEEE-488 bus scanning 3-10
IEEE-488 programming example (temperature measurements) 3-15, 3-23
Inspection for damage 1-2
Instruction manual 1-2
Isolation tests 4-8

K

Keeping connectors clean 3-33

M

Magnetic fields 3-31
Manual addenda 1-2
Manual scanning 3-6
Measurement considerations 3-30

O

Open and close channels (CHAN) 3-2, 3-19
Opening channels 3-9
Operation 3-1
Optional accessories 1-3
Ordering information 5-1
Output connections 2-4
Output connections to multimeter 2-12

P

Parts lists 5-1
Path isolation 3-31
Path resistance tests 4-4
Performance verification 4-2
Power-on safeguard 4-14
Power-up detection 3-2
Principles of operation 4-13

R

Radio frequency interference (RFI) 3-32
Recommended equipment 4-2
Reference junction 4-14
Reference junction test 4-2
Relay control 4-14
Remote operation 3-21
Repacking for shipment 1-3
Replaceable parts 5-1
Resistance connections 2-8
Resistor temperature coefficient testing 3-28
Resistor testing 3-25
RTD temperature measurements 3-13

S

Safety symbols and terms 1-2
Scan configuration (CONFIG-SCAN) 3-5
Scanner card connections 4-2
Scanner card detection 3-2
Scanner card installation 2-10
Scanner card modification 4-15
Scanner card removal 2-12
Scanner option bus query 3-2
Scanning channels 3-9
Service information 4-1
Shipment contents 1-2
Signal limitations 3-2
Soldering precautions 4-2
Special handling of static-sensitive devices 4-13
Specifications 1-2
Start stepping or scanning 3-20
Switching circuits 4-14

T

Temperature measurements 3-11, 3-20
Temperature measurement configuration 3-21
Temperature measurement procedure 3-21
Thermocouple basics A-1
Thermocouple connections 2-6
Thermocouple conversion tables B-1
Thermocouple measurement error sources 3-30
Thermocouple measuring example A-2
Thermocouple measuring procedure A-2
Thermocouple temperature measurements 3-11
Thermocouple theory A-1
Troubleshooting 4-14
Troubleshooting access 4-14
Troubleshooting equipment 4-14
Troubleshooting procedure 4-15
Typical applications 3-25
Typical connecting schemes 2-6

U

Unpacking and inspection 1-2
Using EXIT to stop scanning 3-6
Using RTD and thermocouple sensors together 3-14
Using SCAN to configure scan parameters and start scanning 3-5

V

Voltage connections 2-7

W

Warranty information 1-1
Wiring procedure 2-3

KEITHLEY

Service Form

Model No. ______________ **Serial No.** ______________ **Date** ______________

Name and Telephone No. ______________________________

Company ______________________________

List all control settings, describe problem and check boxes that apply to problem. ______________________________

____

____

☐ Intermittent
☐ IEEE failure
☐ Front panel operational

☐ Analog output follows display
☐ Obvious problem on power-up
☐ All ranges or functions are bad

☐ Particular range or function bad; specify ______________
☐ Batteries and fuses are OK
☐ Checked all cables

Display or output (check one)

☐ Drifts
☐ Unstable
☐ Overload

☐ Unable to zero
☐ Will not read applied input

☐ Calibration only
☐ Data required

☐ Certificate of calibration required

(attach any additional sheets as necessary)

Show a block diagram of your measurement system including all instruments connected (whether power is turned on or not). Also, describe signal source.

Where is the measurement being performed? (factory, controlled laboratory, out-of-doors, etc.)

____

____

What power line voltage is used? ______________ Ambient temperature? ______________ °F

Relative humidity? ______________ Other? ______________

Any additional information. (If special modifications have been made by the user, please describe.)

____

____