OPERATING AND SERVICE MANUAL

**VOLUME 2**

# HP 8673C
# HP 8673D
# SYNTHESIZED
# SIGNAL GENERATOR

## (Including Options 001, 002, 003, 004, 005, 006, 908 and 913)

### SERIAL NUMBERS

This manual applies directly to instruments with serial numbers prefixed 2332A.

For additional important information about serial numbers, see INSTRUMENTS COVERED BY MANUAL in Section I.

**NOTE**

If you return the request card for a final Operating and Service Manual, Volume 1, we will send you a complete final Operating and Service Manual, Volume 1 and 2.

HEWLETT PACKARD

© Copyright HEWLETT-PACKARD COMPANY 1984, 1985
1501 PAGE MILL ROAD, PALO ALTO, CALIFORNIA, U.S.A.

Volume 1 Part Number 08673-90021
Volume 2 Part Number 08673-90022
Microfiche for complete Operating Service Manual Part No. 08673-90025

Printed: March 1985

www.valuetronics.com

## COPYRIGHT AND DISCLAIMER NOTICE

Copyright – Agilent Technologies, Inc. Reproduced with the permission of Agilent Technologies Inc. Agilent Technologies, Inc. makes no warranty of any kind with regard to this material including, but not limited to, the implied warranties of merchantability and fitness for a particular purpose. Agilent Technologies, Inc. is not liable for errors contained herein or for incidental or consequential damages in connection with the furnishing, performance, or use of this material or data.

www.valuetronics.com

# MANUAL CHANGES

**MANUAL IDENTIFICATION**
**Model Number:** HP 8673C/D
**Date Printed:** March 1985
**Part Number:** 08673-90022

SYNTHESIZED SIGNAL GENERATOR
VOLUME 2

This supplement contains important information for correcting manual errors and for adapting the manual to instruments containing improvements made after the printing of the manual.

To use this supplement:

Make all ERRATA corrections

Make all appropriate serial number related changes indicated in the tables below.

| Serial Prefix or Number | Make Manual Changes |
|---|---|
| 2410A | 1 |
| 2413A(8673C only) | 1—2 |
| 2413A (8673D only) | 1—4 |
| 2417A | 1—3 |
| 2426A | 1—5 |
| 2446A | 1—6 |
| 2447A | 1—7 |
| 2452A | 1—8 |
| 2510A, 2511A | 1—9 |
| 2512A | 1—10 |

| Serial Prefix or Number | Make Manual Changes |
|---|---|
| 2513A | 1—11 |
| 2530A | 1—12 |
| 2535A | 1-13 |
| 2540A | 1—14 |
| 2540A00309 & above (8673C only) | 1—15 |
| 2540A00201 & above (8673D only) | 1—15 |
| ▶2608A | 1—16 |

▶ NEW ITEM

## ERRATA

Page 6-5, Table 6-3:
**A1A2C6, 8, 9:** For replacement, use the part listed in **CHANGE 9.**

Page 6-6, Table 6-3:
**A1A2A1C18:** The part shown in **CHANGE 12** is the preferred replacement for all instruments.

Page 6-7, Table 6-3:
**A1A2A1R41, 46:** If replacement is needed, use the parts listed in **CHANGE 15.**

Page 6-12, Table 6-3:
Reverse the part numbers and description for A1A3VR7 and A1A3VR9.
**A1A4C6, 10:** For replacement, use the part listed in **CHANGE 9.**

Page 6-13, Table 6-3:
**A1A4C11, 16, 20:** For replacement, use the part listed in **CHANGE 9.**
**A1A4C45:** For replacement, use the part listed in **CHANGE 9.**

Page 6-25, Table 6-3:
**A1A9:** If replacement is needed, use the part listed in **CHANGE 5.**

Page 6-26, Table 6-3:
**A1A11:** If replacement is needed, use the part listed in **CHANGE 5.**

NOTE

Manual change supplements are revised as often as necessary to keep manuals as current and accurate as possible. Hewlett-Packard recommends that you periodically request the latest edition of this supplement. Free copies are available from all HP offices. When requesting copies quote the manual identification information from your supplement, or the model number and print date from the title page of the manual.

3 April 1986
18 Pages

Printed in U.S.A.

HEWLETT PACKARD

www.valuetronics.com

**ERRATA (cont'd)**

**NOTE**

*The original part is no longer available. When installing a new assembly in an instrument with a serial number prefix 2417A or less, remove or cut jumper W1 on the new A1A11 assembly. W1 is directly below test point FLTR.*

*Instruments with serial number prefixes 2426A through 2510A may have new preamplifier and power amplifier assemblies which are marked with the old part numbers. The new assemblies can be identified by the PC Board part numbers, 08673-60139 and 08673-60140 respectively. The power amplifier can also be identified by a fifth test point marked FLTR, and jumper W1.*

Page 6-28, Table 6-3:
**A1W5:** For replacement, use the part listed in **CHANGE 9.**
**A1W7:** If replacement is needed, use the part listed in **CHANGE 4.**

Page 6-39, Table 6-3:
**A2A9U11, U22:** For replacement, use the parts shown in **CHANGE 10.**

Page 6-40, Table 6-3:
Change A2A11 description to "ROM BD Assy (does not include U5, U6, U7)".
Change A2A11U5 to 08673-80038 CD7, ROM
Change A2A11U6 to 08673-80039 CD8, ROM
Change A2A11U7 to 08673-80040 CD1, ROM
Change A2A11U8 to 08673-80014 CD9, ROM.

**NOTE**

*If replacement is needed for A2A11U5, 6, or 7, use the new set listed in* **CHANGE 8.** *The set of 3 can be obtained by ordering HP Part No. 08673-60127 CD3.*

Page 6-43, Table 6-3:
Change A3A1 to 08673-60133 CD2.

Page 6-47, Table 6-3:
Delete A3A1A2C41.

Page 6-51, Table 6-3:
**A3A1A3U8, 19:** For replacement, use the part shown in **CHANGE 12.**
Change A3A1A4 to 86701-60029 CD3.
Change A3A1A4, 86701-60071, to M/N VCO ASSEMBLY (RESTORED 86701-60029).
Change A3A1A4A1 to NSR (delete part number).

Page 6-52, Table 6-3:
Change A3A1A5 to 86701-60065 CD7, M/N OUTPUT ASSEMBLY (INCLUDES A3A1A4).

Page 6-56, Table 6-3:
Add A3A3R61 0698-3631 CD8 RESISTOR-FXD 330 5% 2 W MO TC = 0 ± 200.

Page 6-60, Table 6-3:
**A3A5U2-4:** For replacement, use the part shown in **CHANGE 10.**

Page 6-64, Table 6-3:
**A3A7U1:** For replacement, use the part shown in **CHANGE 10.**

Page 6-71, Table 6-3:
Change A3MP37 to 2510-0195 CD9 Qty 4 SCREW MACH 8-32 .375-IN-LG 100 DEG.
Change A3MP38 Qty to 8.
Change A3MP39 Qty to 4.
Change A3MP44 to 08673-20142 CD6 Same Description.
Change A3MP48 to 2510-0192 CD6 Qty 4 SCREW MACH 8-32 .25-IN-LG 100 DEG.



www.valuetronics.com

**ERRATA (cont'd)**

Page 6-72, Table 6-3:
Add A3P1 86701-60067 CD0 SHORTING PLUG (OPT 002 ONLY).

Page 6-76, Table 6-3:
**A4U1**: The original part was 5060-3444; however, if replacement is needed, use the part listed in Table 6-3 and in **CHANGE 5**.

Page 6-77, Table 6-3:
Add 2190-0891 CD2 QTY 2 WASHER-FL MTLC NO. 4 .125-IN ID.

Page 6-78:
**A5A2 C6, 8, 9**: For replacement, use the part listed in **CHANGE 9**.

Page 6-85, Table 6-3:
**A5A4C5, 10, 11, 16, 20**: For replacement, use the part listed in **CHANGE 9**.

Page 6-86, Table 6-3:
**A5A4C45**: For replacement, use the part listed in **CHANGE 9**.

Page 6-92, Table 6-3:
**A5A6U6**: For replacement, use the part shown in **CHANGE 11**.

Page 6-96, Table 6-3:
**A5A9U13, U16**: If either of these ROMS needs replacement, they should both be the parts shown in **CHANGE 11**. ROM Kit 08673-80061 contains these two ROMs and Service Notes, and is recommended for replacement in instruments with serial number prefixes 2512A and lower.

Page 6-100, Table 6-3:
**A5AR1**: If replacement is needed, order replacement kit 08673-60080 CD7, which includes a new amplifier (listed in **CHANGE 14**), mounting bracket, cables and mounting screws and a Service Note. The new amplifier has a 10 dB improvement in noise floor and uses less power.

**A5AT1**: For replacement, use the part shown in **CHANGE 7**.

Page 6-101, Table 6-3:
Change A5MP62 Qty to 8.

Page 6-102, Table 6-3:
Add A5MP128, 2360-0333 CD8 Qty 2 SCREW-MACH 6-32 .25-IN-LG 100 DEG.

Page 6-104, Table 6-3:
Change MP16 Qty to 12.

Page 6-105, Table 6-3:
Add MP71 2190-0891 CD2 Qty 2 WASHER-FL MTLC NO. 4 .125-IN ID.

Page 6-110, Figure 6-4:
At the front of the four corner struts (MP45, etc.), change the horizontal mounting screws (two on each side) to MP48.
At the rear of the four corner struts, change the corner mounting screws (those at a 45-degree angle) to MP37.
Add designator MP76 to the rear frame.

Page 6-123, Figure 6-17:
Reverse A4 and A5.

Page 6-126, Figure 6-20:
Change designator MP98, fastening MP29 to MP8, to MP128.



www.valuetronics.com

## SERVICE SHEET BD7 (cont'd)

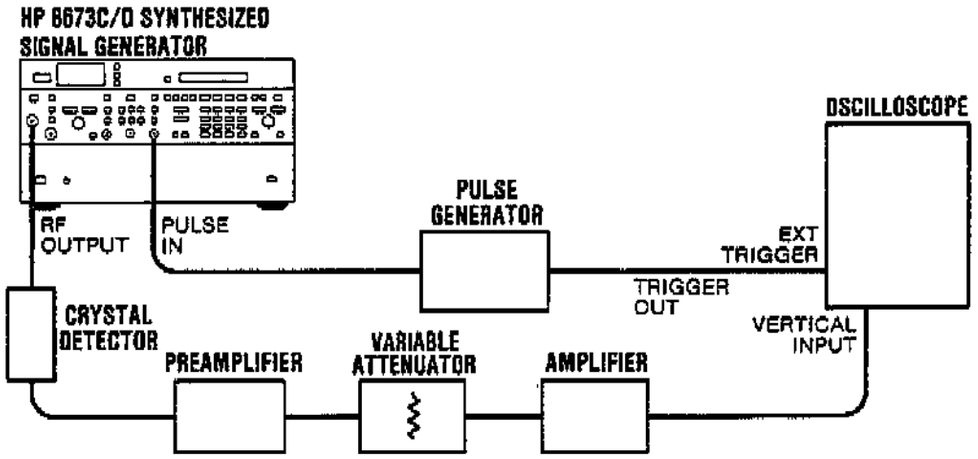


**Figure 8-51. Pulse Modulation Initial Check Test Setup**

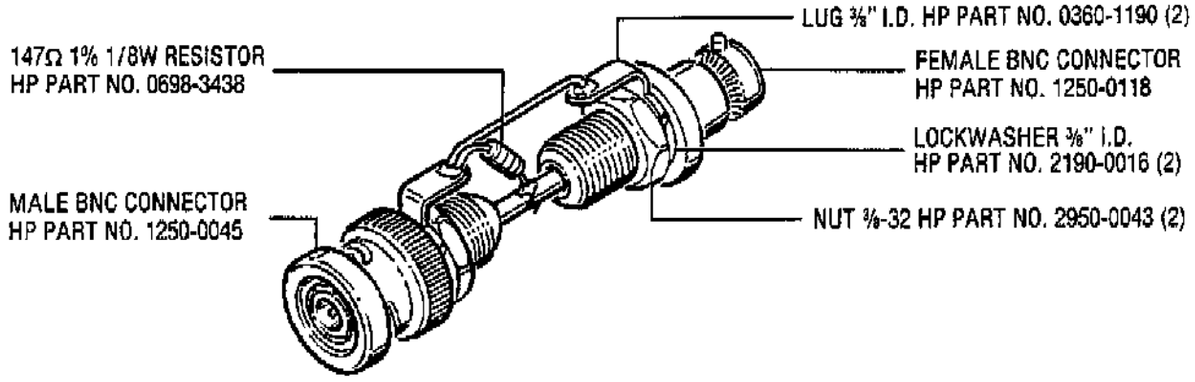


**Figure 8-52. Pulse Shunt Adapter**

**Initial Checks.** The purpose of these initial checks is to determine the failure mode of the unit under test. Once the failure mode is determined, the reader will be referred to the appropriate troubleshooting procedures.

1. Connect the equipment as shown in Figure 8-51. The shunt adapter can easily be fabricated using 2 BNC connectors and a 147 ohm resistor as shown in Figure 8-52.

2. Set the pulse generator for a 1 MHz pulse rate with a pulse width of 300 ns and pulse height of 3 volts peak. Set the variable attenuator for 10 dB attenuation.

3. On the Signal Generator press RCL 0 and PULSE NORM. Set Output Level RANGE to 0 dBm and VERNIER to 0 dBm.

4. Observe the detected pulse on the oscilloscope.

   If the pulse is absent or seriously distorted, there is a problem with the shunt or series pulse circuits, go to (✓1) Shunt Pulse Check and/or (✓2) Series Pulse Check under Band 1 Checks.

   If the detected pulse looks good, go to Step 5.

5. Bypass the preamp/amplifier as shown in Figure 8-51. Adjust the oscilloscope vertical position and sensitivity controls so that the pulse base line is one division from the bottom graticule line and approximately 5 divisions high in peak amplitude. (The Signal Generator output level may have to be increased to +8 dBm.)

6. Switch Signal Generator to CW mode.



www.valuetronics.com

**ERRATA (cont'd)**

Service Sheet 15 (Schematic):
At the left side of the schematic, change off-page connector 22 C1 to 19 C1. Change off-page connector 22 BL to 19 BL.

Service Sheet 16 (Schematic):
Change the pin connections and functions for A1W12 (connecting to Power Amplifier Assembly A1A11) to the following: (These errors are corrected, and a line added, in the partial schematic in **CHANGE 5**.)

| Function | Pin Number (both ends of A1W12) |
|---|---|
| +5V | 4,11 |
| Gnd. | 7,8 |
| −10V | 2,13 |

Change C5 to 220 pF.

Service Sheet 19 (Schematic):
Change R31 to 10 kΩ.
Change R35 to 25 kΩ.

Service Sheet 20, Figure 8-244:
Reverse VR7, above Q14, and VR9, lower left corner.
Change RT2, below Q15, to R97.

Service Sheet 20 (Schematic):
Change R11 to 511Ω.
Change R52 to 1330Ω.
Change R72 to 2000 Ω.
In the upper right corner, change >29>—— NC to >29>—BF 30.

Service Sheet 21 (Schematic):
Add reference designation P/O XA6 to all A1A12 edge connectors.

Service Sheet 22 (Schematic):
Change the pin connections for W5 (upper right corner) to the following:

| Function | Pin Number (both ends of W5) |
|---|---|
| VDN | 11 |
| VUP | 9 |

Service Sheet 24 (Schematic):
On the left side, reverse off-page connectors DD and DE, and the associated labels CCW and CW.

Service Sheet 25 (Schematic):
A2A1U4: Delete polarity symbol at pin 2.
Change NC at pins 3 and 11 to +5V.
A2A1U2: Add a polarity symbol at pin 9.
Change NC at pins 3 and 11 to +5V.
Change P/O A4 FRONT PANEL ASSEMBLY (08673-60016) to P/O A4A1 FRONT PANEL BOARD ASSEMBLY (08673-60001)

Service Sheet 27, Figure 8-258:
Substitute Figure 8-258 of this errata.

Service Sheet 29 (Schematic):
On U1, connect pins 1, 9, and 15 to ground instead of the connection shown.
On U22, connect pin 11 to +5V instead of to ground.



www.valuetronics.com

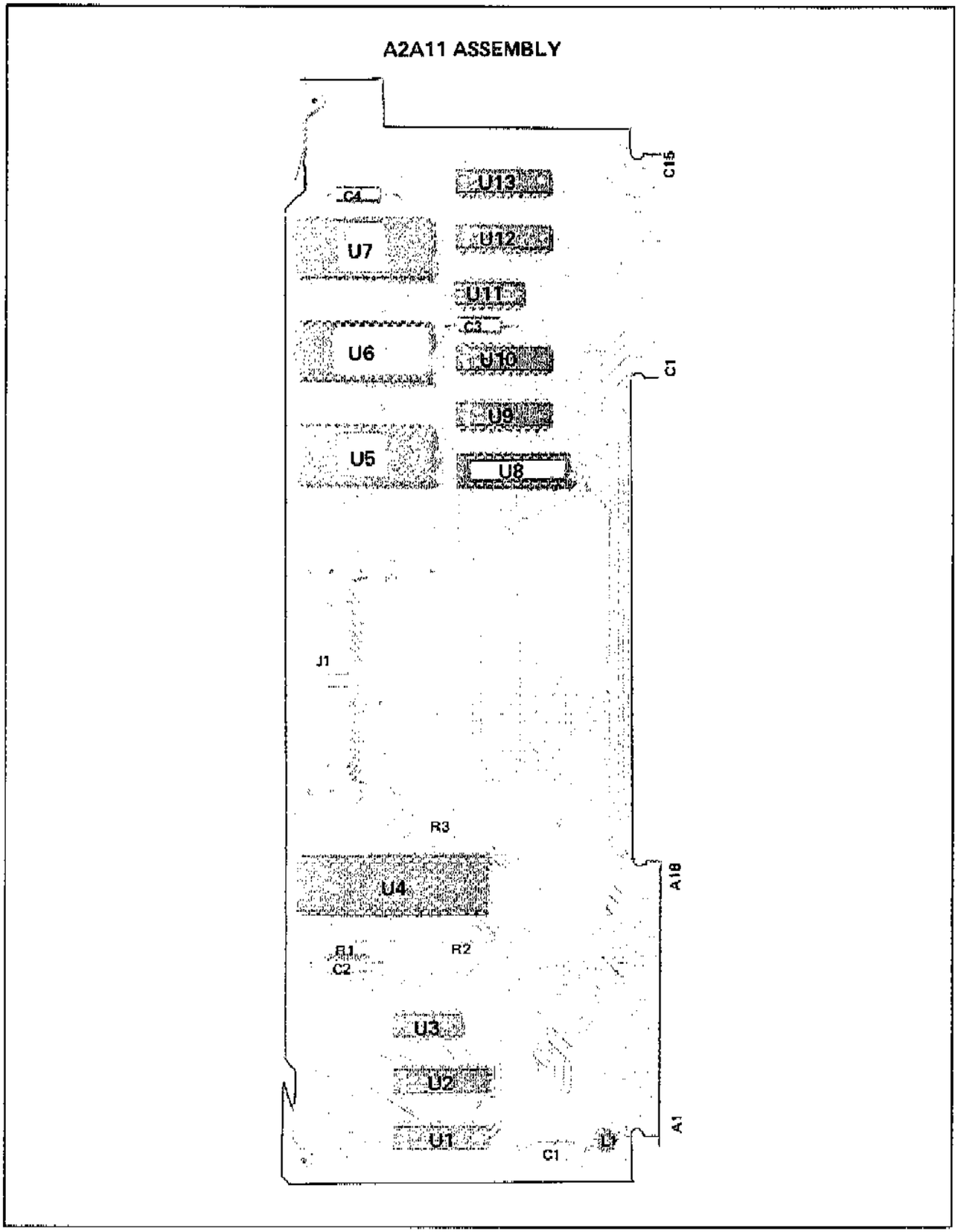


Figure 8-258. A2A11 Rom Assembly Component Location



www.valuetronics.com

## ERRATA (cont'd)

Service Sheet 31 (Schematic):
Change U15 pins 10 and 13 to NC. Connect pin 1 to +5V instead of to ground.
Connect U22 pin 1 to ground instead of +5 V.
At the right side of the schematic, change off-page connector GJ 9 to GJ 26 .
At the right side of the schematic, add prefix A2 to all rear panel connectors (J2 through J7).
Change NOTE 3 to the following:

**A2A1A7 Configuration Switch**

| | Open | Closed |
|---|---|---|
| S1A (W1) | | ALL |
| S1B (W2) | ALL | |
| S1C (W3) | | 8673C |
| S1D (W4) | ALL | |
| S1E (W5) | ALL | |
| S1F (W6) | | 8673D |
| S1G (W7) | | ALL |
| S1H (W8) | | Opt. 001 |

Service Sheet 32 (Schematic):
Change R1 to R3.
Change R2 to R4.

Service Sheet 33, Figure 8-270:
Delete C10 and C11. Add R6, R7, and R8 directly above C8, C9, and C12 respectively.

Service Sheet 33, (Schematic):
Change Power Cable reference designator W1 to W6.
Change A3A1 to 08673-60133.
In the lower right part of the schematic, change off-page connector AE 34 to +5.2V UNREG.

Service Sheet 34, Figure 8-272:
Change the part number to 08673-60090. Mark new location for C3, directly below the part number.
Add R61 at former location of C3.

Service Sheet 34 (Schematic):
Change R27—R29 to 0.33Ω.
Add R61, 330Ω. connected from +20V (TP5) to ground.

Service Sheet 36 (Schematic):
Delete A5A6VR2 and its connection to −40V.
Change the connection at the lower end of A5A6R57 as follows:
R57 connects only to U5 pin 7, and R55 connects only to R59.
Change A5A2A1R17 (above Q13) to 28.544 kΩ.

Service Sheet 37, Figure 8-280:
Change C29, above Q10, to C41.

Service Sheet 39 (Schematic):
Delete R31 and the connection to −10V.
Change R27 to 56.2 kΩ.



www.valuetronics.com

## ERRATA (cont'd)

Service Sheet 40 (Schematic):
Add note to W1, right side of schematic:
W1 NOT INSTALLED FOR 8673C/D.

Service Sheet 41, Figure 8-288:
Change C3, 4, 5, 6 to C1, 2, 3, 4 respectively.
Change C1, 2, 7, 8 to C5, 6, 8, 7 respectively.

Service Sheet 41 (Schematic):
Change R10—R12 to 14.7 kΩ.
To −30V line, lower left corner, add off-page connector A 36 .

Service Sheet 42 (Schematic):
Change R11 to 511Ω.
Change R52 to 1330Ω.
Change R72 to 2000Ω.
Change the connection at the lower end of R94 to ground instead of to −5V.
Change off-page connector AB 36 to NC.

Service Sheet 44 (Schematic):
Change off-page connector 14, 19, 20 AR to 36, 42 AR .
Change off-page connector BJ 42 to NC.
Change off-page connector BK 42 to CP 37 .

Service Sheet 46 (Schematic):
Below LINE switch S1, change A5J1 to A5J2.
If your instrument's serial number prefix is 2332A, delete capacitor C2.

## CHANGE 1

Page 6-6, Table 6-3:
Change A1A2A1C14 to 0180-0491 CD5 CAPACITOR-FXD 10 μF ±20% 25VDC TA.

Page 6-8, Table 6-3:
Change A1A2A2C3 to 0180-0491 CD5 CAPACITOR-FXD 10 μF ±20% 25VDC TA.

Page 6-78, Table 6-3:
Change A5A2A1C14 to 0180-0491 CD5 CAPACITOR-FXD 10 μF ±20% 25VDC TA.

Page 6-80, table 6-3:
Change A5A2A2C3 to 0180-0491 CD5 CAPACITOR-FXD 10 μF ±20% 25VDC TA.

Service Sheet 14 (Schematic):
Change C14 to 10 μF.

Service Sheet 17 (Schematic):
Change C3 to 10 μF.

Service Sheet 24 (Schematic):
Add Capacitor C7, 0.1 μF, connected between U14 pin 14 and +5V.

Service Sheet 36 (Schematic):
Change C14 to 10 μF.

Service Sheet 39 (Schematic):
Change C3 to 10 μF.



www.valuetronics.com

## CHANGE 2

Page 6-92, Table 6-3:
Change A5A6R40 to 0757-0280 CD3, RESISTOR 1K 1% .125W F TC = 0 ±100.
Change A5A6R48 to 2100-3253 CD7, RESISTOR-TRMR 50K 10% TOP-ADJ 1-TRN.
Change A5A6R55 to 0757-0441 CD8, RESISTOR 8.25K 1% .125W F TC = 0 ±100.
Change A5A6R59 to 2100-3210 CD6, RESISTOR-TRMR 10K 10% TOP-ADJ 1-TRN.

Service Sheet 36 (Schematic):
Change A5A6R40 to 1000Ω.
Change A5A6R48 to 50 kΩ.
Change A5A6R55 to 8250Ω.
Change A5A6R59 to 10 kΩ.

Service Sheet 46 (Schematic):
Add C2, 0.1 μF, between the cathode of CR1 and the cathode of CR3.

## CHANGE 3

Page 6-9, Table 6-3:
Change A1A3 to 08673-60138 CD6.

Page 6-11, Table 6-3:
Change A1A3R11 to 0757-0405 CD4, RESISTOR 162 1% .125W F RC = 0 ±100.

Page 6-12, Table 6-3:
Change A1A3R94 to 2100-3732 CD7, RESISTOR-TRMR 500 10% SIDE-ADJ 17-TRN.

Service Sheet 20 (Schematic):
Change A1A3 to 08673-60138.
Change R11 to 162Ω.
Change the connection at the lower end of R94 to −5V.

Service Sheet 42 (Schematic):
Change A5A3 to 08673-60138.
Change R11 to 162Ω.
Change the connection at the lower end of R94 to −5V.

## CHANGE 4

Page 6-28, Table 6-3:
Change A1W7 to 08673-60069 CD2.

## CHANGE 5

Page 6-12, Table 6-3:
Change A1A4 to 08673-60137 CD5.

Page 6-25, Table 6-23:
Change A1A9, 08673-67001, to 08673-67012 CD9.
Change A1A9, 08673-67201, to 08673-67206 CD3, Restored 08673-67012.



www.valuetronics.com

**CHANGE 5 (cont'd)**

Page 6-26, Table 6-3:
Change A1A11, 08673-67004, to 08673-67011 CD8.
Change A1A11, 08673-67204 to 08673-67205 CD2, Restored 08673-67011.
Change A1A12 to 08673-60136 CD4.

Page 6-76, Table 6-3:
Change A4U1 to 0960-0683 CD1.

Page 6-105, Table 6-3:
Delete shields MP63 through MP66.

Service Sheet 14 (Schematic):
Change A1A12 to 08673-60136.

Service Sheet 15, Figure 8-229:
Change 08673-60117 to 08673-60137.

Service Sheet 15 (Schematic):
Change A1A12 to 08673-60136.
Change A1A4 to 08673-60137.
Add resistor R7G and a logic line labeled NF connecting the resistor to U9 pin 12 and off-page connector FL 16 as in the partial schematic diagram on the following page.

Service Sheet 16 (Schematic):
Change A1A12 to 08673-60136.
Substitute the following schematic for the appropriate part of the schematic diagram.

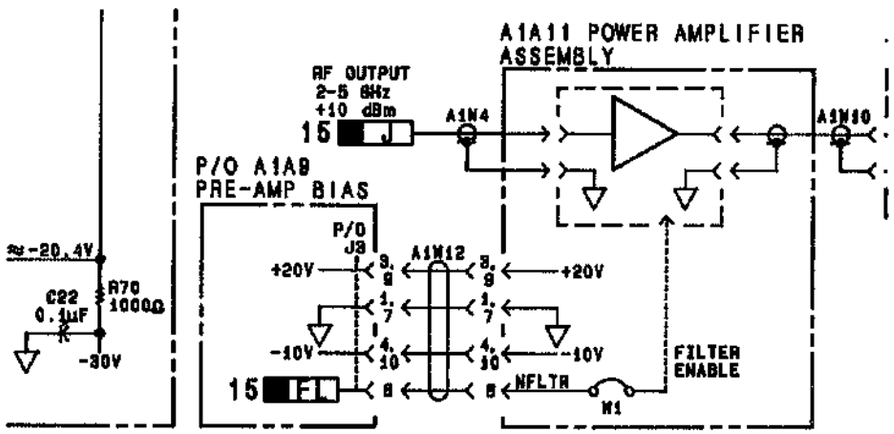


**Figure 8-233. P/O YIG Driver Assembly Schematic Diagram (P/O CHANGE 5)**

Service Sheets 18 through 22 (Schematics):
Change A1A12 to 08673-60136.



www.valuetronics.com

**CHANGE 5 (cont'd)**

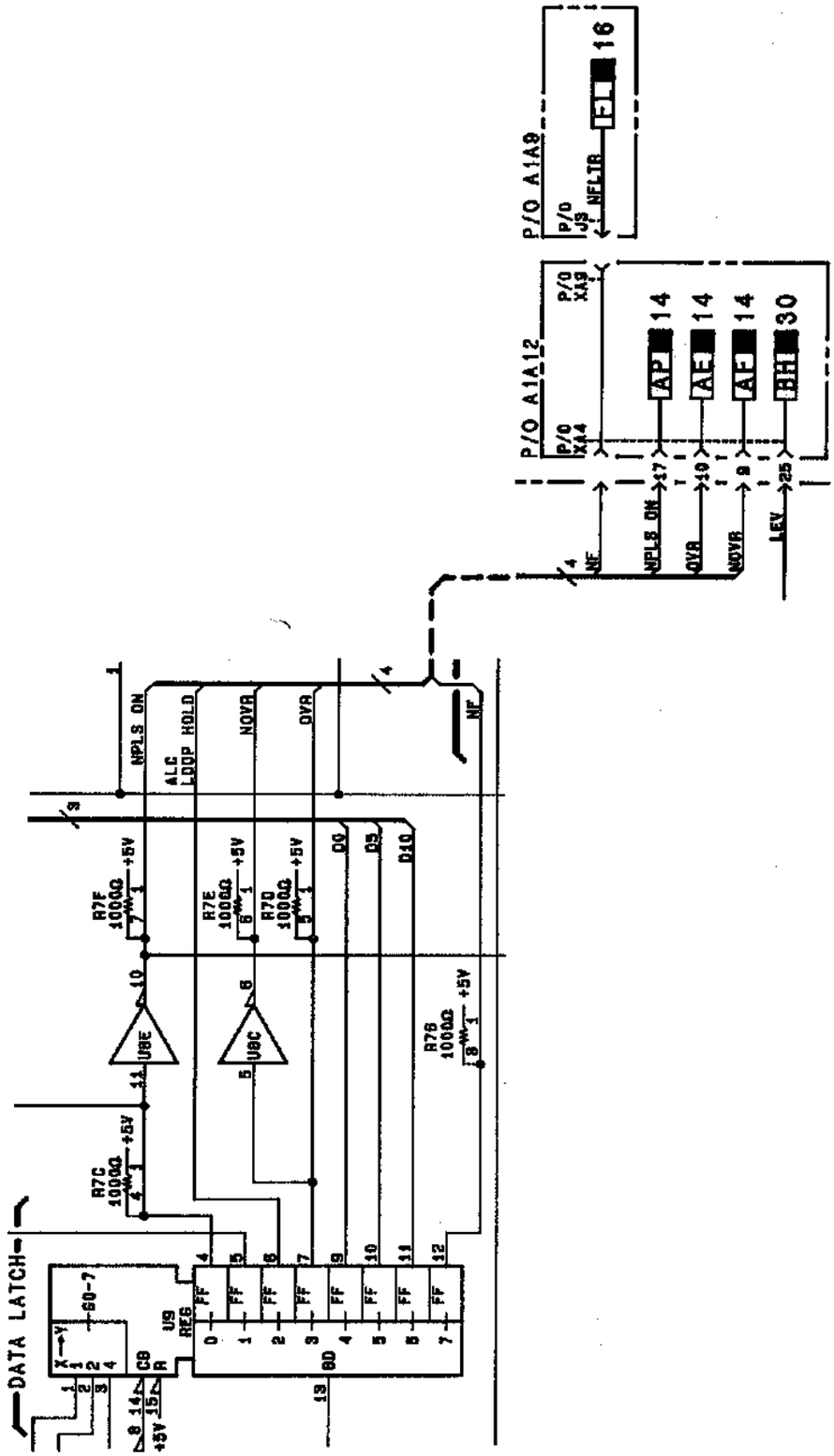


Figure 8-230. P/O Pulse Driver Processing Assembly Schematic [P/O CHANGE 5]



www.valuetronics.com

## CHANGE 5 (cont'd)

Service Sheets 18 through 22 (Schematics):
Chnage A1A12 to 08673-60136.

Service Sheet 37, Figure 8-280:
Change 08673-60117 to 08673-60137.

Service Sheet 37 (Schematic):
Change A5A4 to 08673-60137.
Add resistor R7G and a logic line labeled NF as follows:

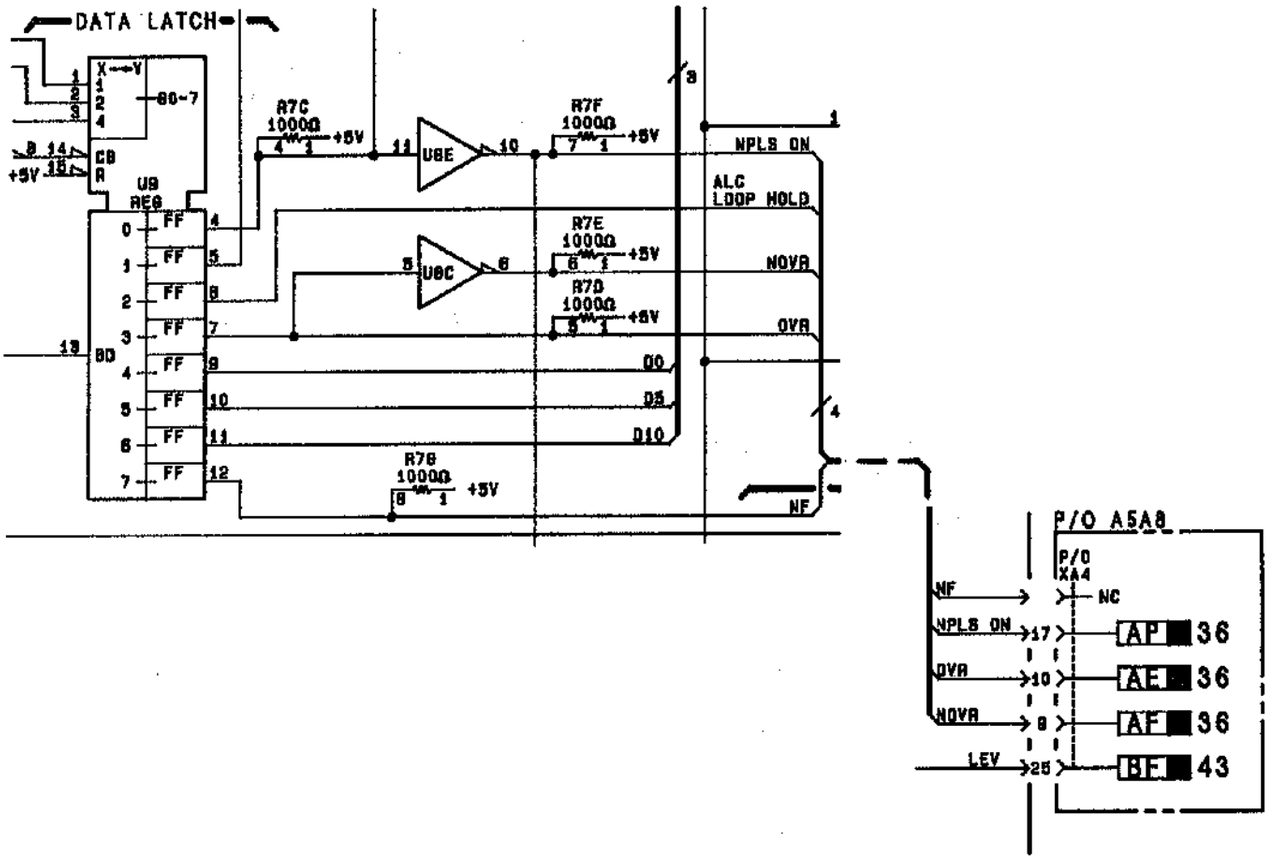


**Figure 8-281. P/O Pulse Driver Processing Assembly Schematic (Part of CHANGE 5)**

## CHANGE 6

Page 2-5, Figure 2-4:
Add W18 HP-IB Adapter HP part number 5060-9462.

Page 6-105, Table 6-3:
Add W8 5060-9462 CD9 HP-IB ADAPTER.

Service Sheet 29 (Schematic):
Change "HP-IB" connector to "HP-IB CONNECTOR AND W8 ADAPTER".



www.valuetronics.com

## CHANGE 7

Page 6-27, Table 6-3:
Change A1AT2 to 0960-0699 CD9.

Page 6-68, Table 6-3:
Change A3A10 to 08673-60161 CD5, same description.
Change A3A10J3 to 1252-0473 CD7, same description.

Page 6-72, Table 6-3:
Change A3P1 to 5060-0346 CD0.

Page 6-100, Table 6-3:
Change A5AT1 to 0960-0695 CD5.

Service Sheets 1-5, 9-13, and 33-35 (Schematics):
Change A3A10 to 08673-60161.

## CHANGE 8

Page 6-6, Table 6-3:
Change A1A2MP15 to 08673-60147 CD3

Page 6-9, Table 6-3:
Change A2A2R21 to 2100-4090 CD2.
Change A2A2R26 to 2100-4089 CD9.
Change A2A2R40 to 2100-4090 CD2.

Page 6-40, Table 6-3:
Change A2A11U5 to HP Part No. 08673-80047 CD8.
Change A2A11U6 to HP Part No. 08673-80048 CD9.
Change A2A11U7 to HP Part No. 08673-80049 CD0.

Page 6-42, Table 6-3:
Change A2MP17 to 08673-00062 CD9, same description.

Page 6-71, Table 6-3:
Change A3MP44 to 08673-20151 CD9, same description.

Page 6-76, Table 6-3:
Change A4MP28 to 08673-00061 CD8, same description.
Change A4MP31 to 08673-20152, same description.

Page 6-100, Table 6-3:
Change A5MP12 to 86730-00029 CD2.

Page 6-103, Table 6-3:
Change A5W33 to 86730-20052 CD3.

Page 6-105, Table 6-3:
Change MP69 to 2360-0332 CD7 QTY 4 SCREW-MACH 6-32 .312-IN-LG PAN-HD-POZI.



www.valuetronics.com

## CHANGE 9

Page 6-5, Table 6-3:
Change A1A2C6, 8, 9 to 0160-6211 CD7, CAPACITOR-FDTHRU 10PF 200V CER.

Page 6-12, Table 6-3:
Change A1A4C6, 10 to 0160-5910 CD1, same description.

Page 6-13, Table 6-3:
Change A1A4C11, 16, 20 to 0160-5910 CD1, same description.
Change A1A4C45 to 0160-4829 CD9, CAPACITOR-FXD 680PF ±10% 100 VDC CER.

Page 6-28, Table 6-3:
Change A1W5 to 08673-20166 CD6, same description.

Page 6-78, Table 6-3:
Change A5A2C6, 8, 9 to 0160-6211 CD7, CAPACITOR-FDTHRU 10PF 200V CER.

Page 6-85, Table 6-3:
Change A5A4C6, 10, 11, 16, 20 to 0160-5910 CD1, same description.

Page 6-86, Table 6-3:
Change A5A4C45 to 0160-4829 CD9, CAPACITOR-FXD 680PF ±10% 100 VDC CER.

Page 6-101, Table 6-3:
Change A5MP79 quantity to 12.

Page 6-102, Table 6-3:
Add A5MP125 86730-00030 CD1, MTG-PLATE, ISOLATOR.
Add A5MP126, 2200-0105 CD4, SCREW, MACHINE, 4-40 .312-IN-LG PAN-HD-POZI.
Add A5MP127, 2200-0601 CD5, SCREW, MACHINE, 4-40 .25-IN-LG 82 DEG.

Page 6-125, Figure 6-19:
To the right of Oscillator G2, add Mounting Plate A5MP125.
Add mounting screws A5MP126 and A5MP127, 3 each.

## CHANGE 10

Page 6-17, Table 6-3:
Change A1A5R42 to 0698-7198 CD0 RESISTOR 26.1 1% .05W F TC=0±100.
Change A1A5R43 to 0698-7194 CD6 RESISTOR 17.8 1% .05W F TC=0±100.

Page 6-39, Table 6-3:
Change A2A9U11 to 1820-3431 CD8.
Change A2A9U22 to 1820-3513 CD7.

Page 6-60, Table 6-3:
Change A3A5U2-4 to 1826-0013 CD8.

Page 6-64, Table 6-3:
Change A3A7U1 to 1826-0013 CD8.

Page 6-72, Table 6-3:
Add A3MP111 3040-0139 CD6 QTY 4 WASHER FL MTLC NO. 8 .172-IN-ID.



www.valuetronics.com

## CHANGE 10 (cont'd)

Page 6-89, Table 6-3:
Change A5A5R42 to 0698-7198 CD0 RESISTOR 26.1 1% .05W F TC=0±100.
Change A5A5R43 to 0698-7194 CD6 RESISTOR 17.8 1% .05W F TC=0±100.

Page 6-119, Figure 6-13:
Add A3MP111, flat washer, between A3MP6 and A3MP16.

Service Sheet 9 (Schematic):
In the table of transistor and integrated circuit part numbers, change U2-4 to 1826-0013.

Service Sheet 13 (Schematic):
In the table of transistor and integrated circuit part numbers, change U1 to 1826-0013.

Service Sheet 17 (Schematic):
Change the resistor marked 6190Ω near Q13 and R27, to R30, 61.9 kΩ.

Service Sheet 22 (Schematic):
Change R42 to 26.1Ω.
Change R43 to 117.8Ω.

Service Sheet 29 (Schematic):
In the table of Transistor and Integrated Circuit Part Numbers, change U11 to 1820-8431, and U22 to 1820-3513.

Service Sheet 44 (Schematic):
Change R42 to 26.1Ω.
Change R43 to 17.8Ω.

## CHANGE 11

Page 6-73, Table 6-3:
Change A4A1R3 to 0698-4037 CD0, RESISTOR 46.4 1% .125W F TC=0±100.
Change A4A1R4 to 0698-3445 CD2, RESISTOR 348 1% .125W F TC=0±100.

Page 6-75, Table 6-3:
Change A4MP4 to 2190-1649 CD6, Same description.

Page 6-92, Table 6-3:
Change A5A6U6 to 1826-0600 CD9.

Page 6-96, Table 6-3:
Change A5A9U13 to 08673-80059 CD2, ROM.
Change A5A9U16 to 08673-80060 CD5, ROM.

Service Sheet 32 (Schematic):
Change A4A1R3 from 100Ω to 46.4Ω.
Change A4A1R4 from 562Ω to 348Ω.

Service Sheet 43 (Schematic):
In the table of Transistor and Integrated Circuit Part Numbers, change U13 and U16 to 08673-80059 and 08673-80060 respectively.



www.valuetronics.com

## CHANGE 12

Page 6-6, Table 6-3:
Change A1A2A1C18 to 0160-4766 CD3 CAPACITOR-FXD 30 PF ±5% 100 VDC CER ±30.

Page 6-51, Table 6-3:
Change A3A1A3U8, 19 to 1820-3126 CD8.

Page 6-71, Table 6-3:
Change A3MP37 to 0515-1331 CD5 SCREW-MACH M4 x 0.7 6MM-LG 90 DEG FL-HD.
Change A3MP38 to 0515-1331 CD5 SCREW-MACH M4 x 0.7 6MM-LG 90 DEG FL-HD.
Change A3MP39 to 0515-0896 CD5 SCREW-MACH M4 x 0.7 10MM-LG.
Change A3MP43 to 5001-8232 CD5 Same Description.
Change A3MP44 to 08673-20156 CD4 Same Description.
Change A3MP45 to 5021-5883 CD8 Same Description.
Change A3MP48 to 0515-1055 CD0 SCREW-MACH M4 x 0.7 6MM-LG 90-DEG FL-HD.
Change A3MP66 to 86701-00062 CD8 Same Description.
Change A3MP67 to 86701-00063 CD9 Same Description.
Change A3MP76 to 86701-20092 CD4 Same Description.

Page 6-100, Table 6-3:
Change A5MP3 to 08673-20054 CD5 Same Description.
Change A5MP6 to 5021-5833 CD8 Same Description.
Change A5MP8 to 08673-20053 CD4 Same Description.

Page 6-102, Table 6-3:
Change A5MP99 to 0515-1234 CD7 SCREW-MACH M3.5 x 0.6 8MM-LG PAN-HD.
Change A5MP111 to 0515-1331 CD5 SCREW-MACH M4 x 0.7 6MM-LG 90 DEG FL-HD.
Change A5MP112 to 0515-1331 CD5 SCREW-MACH M4 x 0.7 6MM-LG 90 DEG FL-HD.
Change A5MP128 to 0515-0889 CD6 SCREW-MACH M3.5 x 0.6 6MM-LG 90 DEG FL-HD.

Page 6-104, Table 6-3:
Change MP16 to 0515-0887 CD4 SCREW-MACH M3.5 x 0.6 6MM-LG PAN-HD.
Change MP19 to 0515-1232 CD5 SCREW-MACH M3.5 x 0.6 8MM-LG PAN-HD.
Change MP25 to 0515-1132 CD4 SCREW-MACH M5 x 0.8 10MM-LG PAN-HD.
Change MP31 to 5041-6819 CD4 Same Description.
Change MP32 to 5041-6820 CD7 Same Description.
Change MP38 to 5061-9436 CD9 Same Description.
Change MP39 to 5061-9448 CD3 Same Description.
Change MP42 to 5061-9691 CD8 Same Description.

Service Sheet 3 (Schematic):
In the table of transistor and integrated circuit part numbers, change U8 and U19 to 1820-3126.

Service Sheet 14 (Schematic):
Change A1A2A1C18 to 30 pF.

## CHANGE 13

Page 6-29, Table 6-3:
Change A2A1R26, 27 to 0757-0897 CD3 RESISTOR 68.1 1% .125W F TC=0±100.

Service Sheet 25 (Schematic):
Change R26 and R27 to 68.1Ω.

## CHANGE 14

▶Page 6-15, Table 6-3:
Change A1A4R44 to 0698-3151 CD7 RESISTOR 2.87K 1% .125W F TC = ±100



www.valuetronics.com

**CHANGE 14 (cont'd)**

Page 6-100, Table 6-3:
Change A5AR1 to 0955-0215 CD4.

Page 6-101, Table 6-3:
Change A5MP36 to 86730-20031 CD8.
Change A5MP79 QTY to 4.

Page 6-102, Table 6-3:
Add A5MP129 0520-0173 CD2 SCREW-MACH 2-56 .188-IN-LG PAN-HD-POZI.

Page 6-103, Table 6-3:
Change A5W29 to 86730-20056 CD7.
Change A5W31 to 86730-20055 CD6.
Change A5W83 to 08673-60186 CD4.

**CHANGE 15**

Page 5-4, Table 5-1:
Add the following:

| Reference Designator | Service Sheet | Range of Values | Basis of Selection |
|---|---|---|---|
| A1A2A1C18 | 14 | 30 to 47 pF | Detector/ALC Assembly. Selected for correct frequency response in the AM bandwidth. Perform AM BANDWIDTH ADJUSTMENT in this section. |

Page 6-6, Table 6-3:
Add an asterisk (*) to A1A2A1C18 to indicate a factory selected component. The allowable range of capacitor values is 30 to 47 pF.

Page 6-7, Table 6-3:
Change A1A2A1R41 to 0698-7257 CD2, RESISTOR 7.5K 1% .05W F TC=0±100.
Change A1A2A1R46 to 0757-0274 CD5, RESISTOR 1.21K 1% .125W F TC=0±100.

▶Page 6-69, Table 6-3:
Change A3A10MP8 to 1400-0907 CD7.

Service Sheet 14 (schematic):
Add an asterisk (*) to C18 to indicate a factory selected component. The allowable range of capacitor values is 30 to 47 pF.
Change R41 to 7.5 kΩ.
Change R46 to 1.21 kΩ.
In the upper right corner, add the following:
* ASTERISK INDICATES FACTORY SELECTED COMPONENT, NOMINAL VALUE SHOWN.

**▶CHANGE 16**

Page 6-40, Table 6-3:
Change A2A13 to 08673-60158 CD0.

Service Sheet 8, Figure 8-216:
Substitute Figure 8-216a, the partial schematic in this change, for the appropriate part of the schematic diagram.



www.valuetronics.com

**CHANGE 16 (cont'd)**

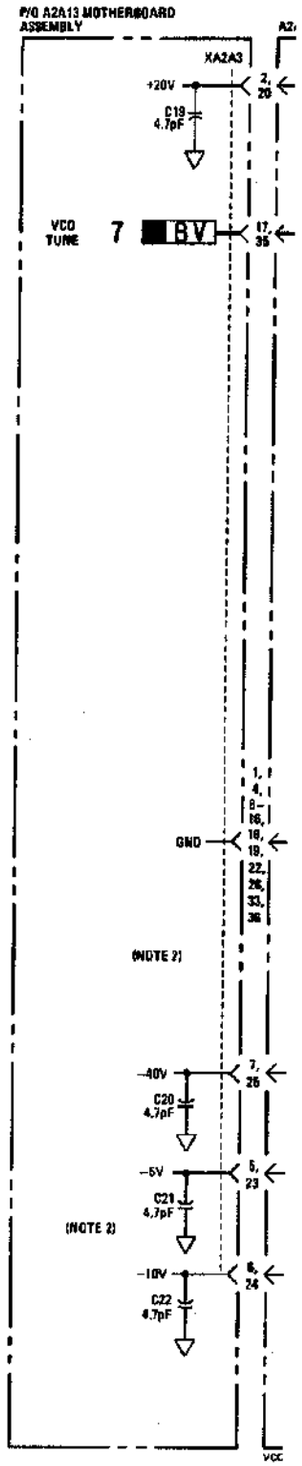


**Figure 216a. P/O VCO 160-240 MHz Assembly Schematic Diagram (P/O CHANGE 16)**



www.valuetronics.com

# CONTENTS


**Sections I through III and Section IV Part 1**

**GENERAL INFORMATION**
**INSTALLATION**
**OPERATION**
**OPERATION VERIFICATION**

**These sections are bound separately with a separate table of contents.**

**Section IV, Part 2**
**PERFORMANCE TESTS**

Page

Introduction ..... 4-1

**Section V**
**ADJUSTMENTS**

Introduction ..... 5-1
Safety Considerations ..... 5-1
Equipment Required ..... 5-1
Identical Circuit Board Assemblies ..... 5-1
Automated Adjustment Procedures ..... 5-1
Factory Selected Components ..... 5-2
Related Adjustments ..... 5-2
Power Supply Adjustments ..... 5-10
10 MHz Reference Oscillator Adjustment ..... 5-12
Reference Loop (VCXO) Adjustment ..... 5-13
M/N Loop Adjustments ..... 5-16
20/30 MHz (LFS) Loop Divider Bias Adjustment ..... 5-18
160-240 MHz (20/30 MHz or LFS Loop) VCO Pretune ..... 5-20
LFS Loop Notch Filter Adjustment ..... 5-22
YTO Pretune Digital-to-Analog Converter Adjustment ..... 5-24
YTO Driver Adjustment ..... 5-26
YTO Loop Sampler Adjustments ..... 5-27
YTO Loop Offset and FM Overmodulation Adjustments ..... 5-30
YTO Loop Phase Detector Adjustments ..... 5-33
FM Driver Adjustments ..... 5-36
FM Accuracy and Overmodulation Adjustments ..... 5-37
SRD Bias Adjustment ..... 5-39
YTM Tune Adjustment ..... 5-42
Clamp Adjustment ..... 5-44
YIG Tuned Filter Adjustment ..... 5-47
4.2 GHz Oscillator Adjustment ..... 5-52
CW LO Clamp Adjustment ..... 5-53
Flatness and ALC Adjustments ..... 5-56
AM Bandwidth Adjustment ..... 5-60
AM Accuracy and Meter Adjustment ..... 5-63
Pulse Modulation Adjustment ..... 5-65
Pulse Amplitude Control Adjustment ..... 5-71
Sweep Out and Blanking/Marker Adjustments ..... 5-77

**Section VI**
**REPLACEABLE PARTS**

Introduction ..... 6-1
Restored Assemblies ..... 6-1

Page

Abbreviations ..... 6-1
Replaceable Parts List ..... 6-1
Factory Selected Parts (*) ..... 6-1
Parts List Backdating (†) ..... 6-1
Parts List Updating ..... 6-1
Ordering Information ..... 6-1
Parts Identification ..... 6-2
Recommended Spares List ..... 6-2

**Section VII**
**MANUAL CHANGES**

Introduction ..... 7-1
Instrument Improvement Modifications ..... 7-1
Improved Key Code Debouncing (Instruments with serial number prefix 2332A) ..... 7-1
Firmware Update Kit ..... 7-1

**Section VIII**
**SERVICE**

Introduction ..... 8-1
Failure Modes and Service Strategy ..... 8-1
General ..... 8-1
Turn-on Errors ..... 8-1
Operator Errors ..... 8-1
Instrument Performance Out of Specification ..... 8-1
Catastrophic Failures ..... 8-1
Service Sheets ..... 8-1
Manual Backdating (†) ..... 8-2
Manual Updating (Manual Changes Supplement) ..... 8-2
Safety Considerations ..... 8-2
Before Applying Power ..... 8-2
Warnings and Cautions ..... 8-2
After Service Safety Checks ..... 8-3
Recommended Test Equipment ..... 8-3
Service Tools, Aids and Information ..... 8-3
Service Accessories ..... 8-3
Service Functions ..... 8-3
Signature Analysis ..... 8-3
Pozidriv Screwdrivers ..... 8-3
Tuning Tools ..... 8-3
Heat Staking Tools ..... 8-3
Hardware ..... 8-12
Assembly Locations ..... 8-12
Parts and Cable Locations ..... 8-12
Test Points and Adjustment Locations ..... 8-13
Service Aids on Printed Circuit Boards ..... 8-13
Other Service Documents ..... 8-13
Repair and Replacement ..... 8-13
After Repair Adjustment Procedure ..... 8-13
Disassembly and Reassembly Procedures ..... 8-13
Top and Bottom Cover Removal ..... 8-13
Front Panel Key Cap Replacement ..... 8-13
Front Panel Switch Replacement ..... 8-13
Etched Circuits (Printed Circuit Boards) ..... 8-14
Electrostatic Discharge (ESD) Precautions ..... 8-15
Module Exchange Program ..... 8-15




www.valuetronics.com

## CONTENTS (cont'd)


Page

Non-Repairable Assemblies ..... 8-15
Factory Selected Components (*) ..... 8-17
Cleaning ..... 8-17
Cleaning Intervals ..... 8-17
Cleaning Solution ..... 8-17
Top Cover Removal and Replacement ..... 8-17
6-Month Cleaning ..... 8-17
12-Month Cleaning ..... 8-18
Schematic Symbology ..... 8-20
Basic Logic Symbology ..... 8-20
Complex Device Symbology ..... 8-20


## LIST OF ILLUSTRATIONS


Figure Page

5-1. Title Screen ..... 5-2
5-2. Main Menu ..... 5-2
5-3. Adjustment Software ..... 5-3
5-4. Power Supply Adjustment Test Setup ..... 5-10
5-5. 10 MHz Reference Oscillator Adjustment Test Setup ..... 5-12
5-6. Reference Loop (VCXO) Adjustment Test Setup ..... 5-13
5-7. M/N Loop Adjustment Test Setup ..... 5-16
5-8. 20/30 MHz (LFS) Loop Divider Bias Adjustment Test Setup ..... 5-18
5-9. LFS Loop Notch Filter Adjustment Test Setup ..... 5-22
5-10. YTO Loop Sampler Adjustment Test Setup ..... 5-27
5-11. Sampler Frequency Response ..... 5-28
5-12. YTO Loop Offset and FM Overmodulation Adjustment Test Setup ..... 5-30
5-13. YTO Loop Offset Adjustment Waveforms ..... 5-31
5-14. YTO Loop Phase Detector Adjustment Test Setup ..... 5-33
5-15. Spectrum Analyzer Display of Phase Locked Loop Gain ..... 5-34
5-16. FM Driver Adjustment Test Setup ..... 5-36
5-17. FM Accuracy and Overmodulation Adjustment Test Setup ..... 5-37
5-18. Format for Entering SRD Bias Voltages for 8673D ..... 5-39
5-19. Gate Voltage Adjustment for 8673D ..... 5-40
5-20. SRD Bias Adjustment Test Setup ..... 5-40
5-21. Optimum YTM Response ..... 5-42
5-22. YTM Tune Adjustment Test Setup ..... 5-43
5-23. Power Clamp Adjustment Test Setup ..... 5-44
5-24. Utility Menu ..... 5-45
5-25. Maximum Power Tests Menu ..... 5-46
5-26. Maximum Power for 8673D ..... 5-46
5-27. YTF Adjustment Test Setup ..... 5-47
5-28. YTF DAC Adjustment ..... 5-48
5-29. YTF Passband Response ..... 5-49
5-30. Maximum Power Menu ..... 5-50
5-31. Maximum Power, Normal Mode for 8673D ..... 5-51
5-32. 4.2 GHz Oscillator Adjustment Test Setup ..... 5-52
5-33. Low Band Clamp Adjustment Test Setup ..... 5-53
5-34. Maximum Power Menu ..... 5-54
5-35. Low Band Clamp Response ..... 5-54
5-36. Low Band Maximum Power ..... 5-55
5-37. 8673D Maximum Power with K-Band (16-26 GHz) Amplifier ..... 5-55
5-38. Flatness and ALC Adjustment Menu ..... 5-56
5-39. Typical Flatness Plot Before Adjustment ..... 5-57
5-40. Flatness Adjustment Display ..... 5-58
5-41. Flatness and ALC Adjustment Test Setup ..... 5-59
5-42. AM Bandwidth Adjustment Test Setup ..... 5-60
5-43. AM Accuracy and Meter Adjustment Test Setup ..... 5-63
5-44. Bias-2 DAC Adjustment Test Setup ..... 5-66
5-45. Series Pulse Width Adjustment Test Setup ..... 5-66
5-46. Series Pulse Width Waveform ..... 5-67
5-47. Pulse Shunt Adapter ..... 5-68
5-48. ALC Sample Pulse Adjustment Setup ..... 5-69
5-49. ALC Sample Pulse Waveform ..... 5-70
5-50. Pulse Program Menu ..... 5-71
5-51. Pulse Amplitude Control Band Select Menu ..... 5-72
5-52. PAC Adjustment Menu ..... 5-73
5-53. Pulse Scan Menu ..... 5-74
5-54. Graph Routine Printout ..... 5-75
5-55. Print Routine Printout ..... 5-75
5-56. Pulse Amplitude Control Adjustment Test Setup ..... 5-76
5-57. Sweep Out and Blanking/Marker Adjustment Test Setup ..... 5-77
5-58. Sweep Out Waveform ..... 5-78
5-59. Marker Waveform ..... 5-78

6-1. HP 8673C/D Parts Identification ..... 6-107
6-2. Interconnecting Parts Identification ..... 6-108
6-3. Upper Unit Overall Parts Identification ..... 6-109
6-4. Upper Unit Cabinet Parts Identification ..... 6-110
6-5. Upper Unit Front Panel Parts Identification ..... 6-111
6-6. A1 Microwave Circuits Parts Identification ..... 6-112




www.valuetronics.com

## LIST OF ILLUSTRATIONS (cont'd)


| Figure | | Page |
|---|---|---|
| 6-7. | A1 Card Cage Parts Identification | 6-118 |
| 6-8. | A1 Pulse Circuits Parts Identification | 6-114 |
| 6-9. | A3 Power Supply and RF Source Parts Identification | 6-115 |
| 6-10. | A3 RF Source Parts Identification | 6-116 |
| 6-11. | A3 Rear Panel Parts Identification | 6-117 |
| 6-12. | A3 Power Supply and Rear Panel Parts Identification | 6-118 |
| 6-13. | A3 Fan Assembly Parts Identification | 6-119 |
| 6-14. | P/O A2 Controller and Rear Panel Parts Identification | 6-120 |
| 6-15. | P/O A2 Controller Assembly Parts Identification | 6-121 |
| 6-16. | YTO Loop Parts Identification | 6-122 |
| 6-17. | YTO and Reference Oscillator Parts Identification | 6-123 |
| 6-18. | Lower Unit Overall Parts Identification | 6-124 |
| 6-19. | Lower Unit (A5) Cabinet Parts Identification | 6-125 |
| 6-20. | Lower Unit Front Panel Parts Identification | 6-126 |
| 6-21. | Lower Unit Card Cage Parts Identification | 6-127 |
| 6-22. | Lower Unit Rear Panel Parts Identification | 6-128 |
| 6-23. | Lower Unit Power Transformer and Regulator Parts Identification | 6-129 |
| 8-1. | Front Panel Pushbutton Switch Assembly | 8-13 |
| 8-2. | Pushbutton Switch Support Anvil | 8-14 |
| 8-3. | Heat Staking Tip | 8-14 |
| 8-4. | Typical Assembly for Heat Staking Operation | 8-15 |
| 8-5. | Basic Logic Symbols and Qualifiers | 8-21 |
| 8-6. | Indicator Symbols | 8-22 |
| 8-7. | Contiguous Blocks | 8-23 |
| 8-8. | AND Dependency Notation | 8-23 |
| 8-9. | Address Dependency Notation | 8-23 |
| 8-10. | OR and Free Dependency Notation | 8-24 |
| 8-11. | Common Control Block | 8-24 |
| 8-12. | Quad D-Type Latch (Combined) | 8-24 |
| 8-13. | Quad D-Type Latch (Individual) | 8-24 |
| 8-14. | Shift Register | 8-25 |
| 8-15. | AND-OR Selector | 8-25 |
| 8-16. | UP-DOWN Counter | 8-26 |
| 8-17. | Quad D-Type Latch | 8-26 |
| 8-18. | HP 8673C/D Assemblies and Subassemblies | 8-28 |
| 8-19. | HP 8673C/D Simplified Block Block Diagrams | 8-29 |
| 8-20. | HP 8673C/D Baseband Frequency Test Setup | 8-38 |
| 8-21. | HP 8673C/D FM Test Setup | 8-39 |
| 8-22. | HP 8673C/D Power Output Test Setup | 8-41 |
| 8-23. | HP 8673C/D Low Band Power Plot | 8-41 |
| 8-24. | HP 8673C High Band Power Plot | 8-42 |
| 8-25. | HP 8673D High Band Power Plot | 8-42 |
| 8-26. | HP 8673C/D Overall Troubleshooting, Block Diagram | 8-43 |
| 8-27. | HP 8673C/D Time Base Reference, Block Diagram | 8-45 |
| 8-28. | 80 kHz Reference, A2A5TP2 | 8-51 |
| 8-29. | A2A5TP3, A2A3 Test Switch HIGH | 8-52 |
| 8-30. | HP 8673C/D RF Phase Locked Loops, Block Diagram | 8-55 |
| 8-31. | FM Amplifier Check Initial Test Setup | 8-57 |
| 8-32. | HP 8673C/D YTO Loop, Block Diagram | 8-57 |
| 8-33. | YTM Simplified Block Diagram | 8-58 |
| 8-34. | Squegging | 8-58 |
| 8-35. | Pulse/YTM Driver Assembly Parts Location | 8-58 |
| 8-36. | YTM Power Output Check Test Setup | 8-59 |
| 8-37. | YTM Power Output Plot | 8-59 |
| 8-38. | YTM Bias Label | 8-60 |
| 8-39. | Peaker DAC Ramp Output | 8-61 |
| 8-40. | Final Output Power Check Test Setup | 8-61 |
| 8-41. | HP 8673C/D Power Output Plot, K Band Amplifier Out, Normal Mode | 8-62 |
| 8-42. | HP 8673C/D Power Output Plot, K Band Amplifier Out, Bypass Mode | 8-62 |
| 8-43. | HP 8673D Power Output Plot, K Band Amplifier In, Normal Mode | 8-63 |
| 8-44. | HP 8673D Power Output Plot, K Band Amplifier In, Bypass Mode | 8-63 |
| 8-45. | HP 8673C/D Low Band Power Plot | 8-64 |
| 8-46. | HP 8673C/D Microwave Signal Path, Block Diagram | 8-67 |
| 8-47. | External ALC Check Test Setup | 8-68 |
| 8-48. | AM Check Test Setup | 8-69 |
| 8-49. | HP 8673C/D ALC Loop, Block Diagram | 8-71 |
| 8-50. | Pulse Modulation Waveforms | 8-72 |
| 8-51. | Pulse Modulation Initial Check Test Setup | 8-72 |
| 8-52. | Pulse Shunt Adapter | 8-72 |
| 8-53. | Pulse Modulation Check Setup | 8-73 |
| 8-54. | Pulse Driver Board Output and Shunt Pulses | 8-74 |
| 8-55. | Pulse Driver Board Input and Series Pulses | 8-75 |
| 8-56. | Bias Tee | 8-76 |
| 8-57. | Pulse Driver Board Input Pulse and Sample Pulse | 8-77 |
| 8-58. | A5 Pulse Modulation Check Setup | 8-78 |
| 8-59. | Pulse Driver Board, Input and Shunt Pulses | 8-79 |




www.valuetronics.com

## LIST OF ILLUSTRATIONS (cont'd)


| Figure | | Page |
|---|---|---|
| 8-60. | Pulse Driver Board, Input and Series Pulses | 8-79 |
| 8-61. | Bias Tee | 8-80 |
| 8-62. | Pulse Driver Board, Input Pulse and Sample Pulse | 8-81 |
| 8-63. | HP 8673C/D Pulse Modulation, Block Diagram | 8-81 |
| 8-64. | Front Panel Keyboard and Indicator Block Diagram | 8-82 |
| 8-65. | M/N Phase Detector, LFS Loop DAC and 20/30 Divider Block Diagram | 8-84 |
| 8-66. | A5 Downconverter Microprocessor/ Controller Block Diagram | 8-85 |
| 8-67. | Sample Error Printout | 8-104 |
| 8-68. | HP 9825A and HP 85F Sample Program Listing | 8-105 |
| 8-69. | HP 8673C/D Controller Assembly, Block Diagram | 8-127 |
| 8-201. | A3A1A1 Reference Phase Detector Assembly Component and Test Point Location | 8-201 |
| 8-202. | Reference Phase Detector Assembly Schematic Diagram | 8-201 |
| 8-203. | A3A1A2 100 MHz VCXO Assembly Component and Test Point Location | 8-203 |
| 8-204. | 100 MHz VCXO Assembly Schematic Diagram | 8-203 |
| 8-205. | A3A1A3 M/N Phase Detector Assembly Component and Test Point Location | 8-205 |
| 8-206. | M/N Phase Detector Assembly Schematic Diagram | 8-205 |
| 8-207. | A3A1A4A2 M/N VCO Board Assembly Component and Test Point Location | 8-207 |
| 8-208. | M/N VCO Assembly Schematic Diagram | 8-207 |
| 8-209. | A3A1A5 M/N Output Assembly Component and Test Point Location | 8-209 |
| 8-210. | M/N Output Assembly Schematic Diagram | 8-209 |
| 8-211. | A2A5 20/30 Divider Assembly Component and Test Point Location | 8-211 |
| 8-212. | 20/30 Divider Assembly Schematic Diagram | 8-211 |
| 8-213. | A2A4 20/30 Phase Detector Assembly Component and Test Point Location | 8-213 |
| 8-214. | 20/30 Phase Detector Assembly Schematic Diagram | 8-213 |
| 8-215. | A2A3 VCO 160-240 MHz Assembly Component and Test Point Location | 8-215 |
| 8-216. | VCO 160-240 MHz Assembly Schematic Diagram | 8-215 |
| 8-217. | A3A5 DAC Assembly Component and Test Point Location | 8-217 |
| 8-218. | Digital to Analog Converter Assembly Schematic Diagram | 8-217 |
| 8-219. | A3A6 YTO Driver Assembly Component and Test Point Location | 8-219 |
| 8-220. | YTO Driver Assembly Schematic Diagram | 8-219 |
| 8-221. | A3A9A5 Sampler Assembly Component and Test Point Location | 8-221 |
| 8-222. | P/O YTO Loop Assembly Schematic Diagram | 8-221 |
| 8-223. | A3A9A4 YTO Phase Detector Assembly Component and Test Point Location | 8-223 |
| 8-224. | P/O YTO Loop Assembly Schematic Diagram | 8-223 |
| 8-225. | A3A7 YTO/FM Coil Driver Assembly Component and Test Point Location | 8-225 |
| 8-226. | YTO/FM Coil Driver Assembly Schematic Diagram | 8-225 |
| 8-227. | A1A2A1 Detector/ALC Assembly Component and Test Point Location | 8-227 |
| 8-228. | Detector/ALC Assembly Schematic Diagram | 8-227 |
| 8-229. | A1A4 Pulse Driver Processing Assembly Component and Test Point Location | 8-229 |
| 8-230. | Pulse Driver Processing Assembly Schematic | 8-229 |
| 8-231. | A1A7 YIG Driver Board Assembly Component and Test Point Location | 8-231 |
| 8-232. | A1A0A1 YIG Assembly Component and Test Point Location | 8-231 |
| 8-233. | YIG Driver Assembly Schematic Diagram | 8-231 |
| 8-234. | A1A2A2 Detector Board Assembly Component and Test Point Location | 8-233 |
| 8-235. | A1A14A1 Bias Board Assembly Component and Test Point Location | 8-233 |
| 8-236. | RF Filter Circuits Component Location (8673C) | 8-234 |
| 8-237. | P/O RF Filter, RF Amplifier, and Detector Amplifier Circuits, 8673C (to be used with Figure 8-239) | 8-235 |




www.valuetronics.com

## LIST OF ILLUSTRATIONS (cont'd)


| Figure | | Page |
|---|---|---|
| 8-238. | RF Filter Circuits Component Location (8673D) | 8-236 |
| 8-239. | P/O RF Filter, RF Amplifier, and Detector Amplifier Circuits (See also Figure 8-237) | 8-237 |
| 8-240. | A1A1 Attenuator Driver Board Assembly Component and Test Point Location | 8-239 |
| 8-241. | Attenuator Driver Assembly Schematic Diagram | 8-239 |
| 8-242. | A1A8 SRD Bias Board Assembly Component and Test Point Location | 8-241 |
| 8 243. | SRD Control Assembly Schematic Diagram | 8-241 |
| 8-244. | A1A3 Function Board Assembly Component and Test Point Location | 8-243 |
| 8-245. | Function Board Assembly Schematic Diagram | 8-243 |
| 8-246. | A1A6 Meter Board Assembly Component and Test Point Location | 8-245 |
| 8-247. | Metering Control Assembly Schematic Diagram | 8-245 |
| 8-248. | A1A5 DAC and Enable Board Assembly Component and Test Point Location | 8-247 |
| 8-249. | DAC and Enable Assembly Schematic Diagram | 8-247 |
| 8-250. | P/O A4A1 Front Panel Assembly Component Location | 8-249 |
| 8-251. | A4 Front Panel Keyboard Schematic Diagram | 8-249 |
| 8-252. | A2A2 Key Code Assembly Component Location | 8-251 |
| 8-253. | Key Code Assembly Schematic Diagram | 8-251 |
| 8-254. | A2A1 Panel Driver Assembly Component Location | 8-253 |
| 8-255. | Panel Driver Assembly Schematic Diagram | 8-253 |
| 8-256. | A2A8 Microprocessor Board Assembly Component and Test Point Location | 8-255 |
| 8-257. | Microprocessor Assembly Schematic Diagram | 8-255 |
| 8-258. | A2A11 Rom Assembly Component Location | 8-257 |
| 8-259. | ROM Assembly Schematic Diagram | 8-257 |
| 8-260. | A2A10 RAM Assembly Component and Test Point Location | 8-259 |
| 8-261. | RAM Assembly Schematic Diagram | 8-259 |
| 8-262. | A2A9 Frequency Output — HP-IB Assembly Component and Test Point Location | 8-261 |
| 8-263. | Frequency Output — HP-IB Assembly Schematic Diagram | 8-261 |
| 8-264. | A2A7 I/O Assembly Component and Test Point Location, Part 1 | 8-263 |
| 8-265. | I/O Assembly Schematic Diagram, Part 1 | 8-263 |
| 8-266. | A2A7 I/O Assembly Component and Test Point Location, Part 2 | 8-265 |
| 8-267. | I/O Assembly Schematic Diagram, Part 2 | 8-265 |
| 8-268. | A4A1 Front Panel Assembly Component Location | 8-267 |
| 8-269. | A4 Front Panel Display Schematic Diagram | 8-267 |
| 8-270. | A3A1 Rectifier Assembly Component and Test Point Location | 8-269 |
| 8-271. | Rectifier Assembly Schematic Diagram | 8-269 |
| 8-272. | A3A3 Positive Regulator Assembly Component and Test Point Location | 8-271 |
| 8-273. | Positive Regulator Assembly Schematic Diagram | 8-271 |
| 8-274. | A3A4 Negative Regulator Assembly Component and Test Point Location | 8-273 |
| 8-275. | Negative Regulator Assembly Schematic Diagram | 8-273 |
| 8-276. | A5A2A1 Detector/ALC Assembly Component and Test Point Location | 8-274 |
| 8-277. | A5A6 Switch Driver Assembly Component and Test Point Location | 8-274 |
| 8-278. | Detector/ALC Assembly Schematic Diagram | 8-275 |
| 8-279. | A5A18A1 Pulse Input Switch Board Assembly Component Location | 8-276 |
| 8-280. | A5A4 Pulse Driver Processing Assembly Component and Test Point Location | 8-276 |
| 8-281. | Pulse Driver Processing Assembly Schematic Diagram | 8-277 |
| 8-282. | A5A7 YIG Driver Board Assembly Component and Test Point Location | 8-279 |
| 8-283. | A5 YIG Driver Assembly Schematic Diagram | 8-279 |




www.valuetronics.com

## LIST OF ILLUSTRATIONS (cont'd)


| Figure | | Page |
|---|---|---|
| 8-284. | A5A2A2 Detector Board Assembly Component and Test Point Location | 8-281 |
| 8-285. | Detector Assembly Schematic Diagram | 8-281 |
| 8-286. | A5A1 Front Panel Assembly Component Location | 8-283 |
| 8-287. | A5 Front Panel Board Assembly Schematic Diagram | 8-283 |
| 8-288. | A5A6 Switch Driver Assembly Component and Test Point Location | 8-285 |
| 8-289. | Switch Driver Board Assembly Schematic Diagram | 8-285 |
| 8-290. | A5A3 Function Board Assembly Component and Test Point Location | 8-287 |
| 8-291. | A5 Function Board Assembly Schematic Diageram | 8-287 |
| 8-292. | A5A9 Microprocessor Assembly Component and Test Point Location | 8-289 |
| 8-293. | A5 Microprocessor Assembly Schematic Diagram | 8-289 |
| 8-294. | A5A5 DAC and Enable Assembly Component and Test Point Location | 8-291 |
| 8-295. | A5 DAC and Enable Assembly Schematic Diagram | 8-291 |
| 8-296. | Low Band RF Chain Component Location | 8-293 |
| 8-297. | Low Band RF Chain Schematic Diagram | 8-293 |
| 8-298. | A5A10 Power Supply Assembly Component and Test Point Location | 8-295 |
| 8-299. | +28V, +20V, and +15V Power Supply Schematic | 8-295 |
| 8-300. | A5A10 Power Supply Assembly Component and Test Point Location | 8-297 |
| 8-301. | +5V, −10V, and −40V Power Supply Schematic Diagram | 8-297 |
| 8-302. | Unit Separation | 8-298 |
| 8-303. | A3 Transformer and Filter Capacitor Remover | 8-300 |
| 8-304. | A1 RF Output Assembly — YTM Relays and Attenuator | 8-301 |
| 8-305. | A1 RF Output Assembly — Pre Amp and Power Amp | 8-302 |
| 8-306. | Location of YTO Mounting Screws | 8-302 |
| 8-307. | YTO Loop in Service Position | 8-302 |
| 8-308. | A5 Card Cage and Processor Board in Service Position | 8-303 |
| 8-309. | A5 Power Transformers | 8-303 |
| 8-310. | Top View, Upper Unit Component Location | 8-305 |
| 8-311. | Top View, Upper Unit DCU and RF Covers Removed — Component Location | 8-305 |
| 8-312. | Top View, Upper Unit, Test Point Location | 8-305 |
| 8-313. | Bottom View, Upper Unit, Component Location | 8-305 |
| 8-314. | Bottom View, Lower Unit Test Point and Component Location | 8-307 |
| 8-315. | Bottom View, Lower Unit Component Locations | 8-307 |
| 8-316. | Top View, Lower Unit — Component Location | 8-307 |


## TABLES


| Table | | Page |
|---|---|---|
| 5-1. | Factory Selected Components | 5-4 |
| 5-2. | Performance Test Failure and Required Action | 5-5 |
| 5-3. | Post-Repair Adjustments | 5-6 |
| 5-4. | YTF Band Adjustments | 5-49 |
| 6-1. | Part Numbers for Exchange Assemblies | 6-2 |
| 6-2. | Reference Designations and Abbreviations | 6-3 |
| 6-3. | Replaceable Parts | 6-5 |
| 6-4. | Code List of Manufacturers | 6-106 |
| 8-1. | Schematic Diagram Notes | 8-4 |
| 8-2. | Service Functions | 8-12 |
| 8-3. | Etched Circuit Soldering Equipment | 8-16 |
| 8-4. | Front Panel Status Annunciators | 8-34 |
| 8-5. | Listing of All M and N Numbers and Resulting Frequencies | 8-46 |
| 8-6. | LFS 1K—8M Inputs | 8-52 |
| 8-7. | LFS 1K—8M Inputs | 8-52 |
| 8-8. | M1-M6 and N1-N5 Inputs | 8-54 |
| 8-9. | M1-M6 and N1-N5 Outputs | 8-54 |
| 8-10. | DAC 1-4800 MHz Inputs | 8-56 |
| 8-11. | DAC 1-4800 MHz Outputs | 8-56 |
| 8-12. | Band Numbers and Frequencies | 8-58 |
| 8-13. | SRD Bias Voltages | 8-60 |
| 8-14. | HP 8673C Power Failure Modes | 8-64 |
| 8-15. | HP 8673D Power Failure Modes | 8-65 |
| 8-16. | Switch Driver A5A6 Checks | 8-66 |
| 8-17. | Switch Driver Checkout | 8-67 |




www.valuetronics.com

## TABLES (cont'd)


| Table | | Page |
|---|---|---|
| 8-18. | Power Up Tests and Error Messages | 8-81 |
| 8-19. | Key Code Patterns | 8-82 |
| 8-20. | Signal Conditions for Front Panel Keyboard to Front Panel Indicators Operation | 8-83 |
| 8-21. | Diagnostic Tests | 8-86 |
| 8-22. | MPU Address Line and address Decoder Signatures | 8-88 |
| 8-23. | Diagnostic ROM (U3) Signatures | 8-88 |
| 8-24. | MPU Signatures | 8-88 |
| 8-25. | Timing, Interrupt and Buffered Data Circuits Signatures | 8-90 |
| 8-26. | MPU Timer and IRQ Encoder Signatures | 8-90 |
| 8-27. | Frequency Data Signatures | 8-92 |
| 8-28. | Front Panel Driver Assembly Signatures | 8-92 |
| 8-29. | Divide-by-Three Circuit Signatures | 8-94 |
| 8-30. | RAM Assembly Signatures | 8-95 |
| 8-31. | ROM Error Codes | 8-96 |
| 8-32. | ROM and Converter Signatures | 8-97 |
| 8-33. | Frequency Diagnostic Output Lines Signatures | 8-100 |
| 8-34. | Frequency Diagnostic Input Lines Signatures | 8-100 |
| 8-35. | Frequency Output—HP-IB Assembly Diagnostic | 8-100 |
| 8-36. | HP-IB Diagnostic Output Lines Signatures | 8-102 |
| 8-37. | HP-IB Diagnostic Input Lines Signatures | 8-102 |
| 8-38. | HP-IB Diagnostic Signatures | 8-103 |
| 8-39. | Miscellaneous Signatures | 8-106 |
| 8-40. | Error Codes and Associated Lines | 8-106 |
| 8-41. | I/O Assembly Diagnostic Signatures (with Special Extender Board) | 8-107 |
| 8-42. | I/O Assembly Diagnostic Signatures (without Special Extender Board) | 8-111 |
| 8-43. | Key Code Patterns | 8-116 |
| 8-44. | Processor Assisted Diagnostic Signatures | 8-118 |
| 8-45. | Freerun Diagnostic Signatures | 8-121 |
| 8-46. | DAC and Enable Diagnostic Signatures | 8-124 |
| 8-47. | A5A10 Voltage Checks | 8-129 |




www.valuetronics.com

## Assemblies vs. Service Sheet List

| Assembly | Description | Ser.Sheet |
|---|---|---|
| A1A1 | Attenuator Driver Board Assembly | 18 |
| A1A2 | Detector Module Assembly | 14,17 |
| A1A2A1 | ALC Board Assembly | 14,17 |
| A1A2A2 | Detector Board Assembly | 17 |
| A1A3 | Function Board Assembly | 20 |
| A1A4 | Pulse Driver Board Assembly | 15 |
| A1A5 | DAC and Enable Board Assembly | 22 |
| A1A6 | Meter Board Assembly | 20,40 |
| A1A7 | YTM Driver Board Assembly | 16 |
| A1A8 | SRD Bias Board Assembly | 19 |
| A1A9 | Preamp Assembly | 14,16 |
| A1A10 | YTM Assembly | 16 |
| A1A10A1 | YIG Heater Control Assembly | 16 |
| A1A11 | Power Amplifier Assembly | 16 |
| A1A12 | Motherboard Assembly | 14-16,18-22, 30,31,40 |
| A1A13 | Terminal Strip | 15,36,37,40 |
| A1A14 | Amp Bias Board Assembly | 17 |
| A2A1 | Panel Driver Board Assembly | 25 |
| A2A2 | Key Code Board Assembly | 24 |
| A2A3 | VCO Assembly | 8 |
| A2A4 | Phase Detector Assembly | 7 |
| A2A5 | Divider Assembly 20/30 | 6 |
| A2A6 | Not Assigned | |
| A2A7 | I/O Board Assembly | 30,31 |
| A2A8 | Microprocessor Board Assembly | 26 |
| A2A9 | Frequency/HP-IB Board Assembly | 29 |
| A2A10 | RAM Board Assembly | 28 |
| A2A11 | ROM Board Assembly | 27 |
| A2A12 | Not Assigned | |
| A2A13 | Motherboard Assembly | 6-8,10, 20-32 |
| A2A14 | Rear Interconnect Board Assembly | 24,29,31 |
| A2A15 | HP-IB Connector Board Assembly | 29 |
| A3A1 | Rectifier Assembly | 33 |
| A3A1A1 | Reference Phase Detector Assembly | 1,2 |
| A3A1A2 | 100 MHz VCXO Assembly | 2 |
| A3A1A3 | M/N Phase Detector Assembly | 3 |
| A3A1A4 | M/N VCO Assembly | 4 |
| A3A1A4A1 | VCO Resonator | 4 |
| A3A1A4A2 | VCO Board Assembly | 4 |
| A3A1A5 | M/N Output Assembly | 5 |
| A3A1A6 | M/N Reference Motherboard Assembly | 1-3,5 |
| A3A1A7 | Reference Housing Assembly | |
| A3A2 | Not Assigned | |
| A3A3 | Positive Regulator Assembly | 34 |
| A3A4 | Negative Regulator Assembly | 35 |
| A3A5 | DAC Assembly | 9 |
| A3A6 | YTO Driver Assembly | 10 |
| A3A7 | FM Driver Assembly | 13 |
| A3A8 | 10 MHz Reference Oscillator | 1 |
| A3A9 | YTO Loop Assembly | 11,12 |
| A3A9A1 | Directional Coupler Assembly | 13 |
| A3A9A2 | YTO Interconnect Assembly | 11-13 |
| A3A9A3 | 2.0 - 6.6 GHz YTO Assembly | 13 |
| A3A9A4 | YTO Phase Detector Assembly | 12 |
| A3A9A5 | Sampler Assembly | 11 |
| A3A9A6 | Attenuator Assembly | 13 |
| A3A9A7 | 6.2 GHz Low Pass Filter | 13 |
| A3A10 | Motherboard Assembly | 1,3,6,10, 12-14,21-23, 26, 29-31, 33-35 |
| A4A1 | Front Panel Board Assembly | 20,22,28, 32,40 |
| A5A1 | Front Panel Board Assembly | 41,42,44 |
| A5A2 | Detector Module Assembly | 36,39 |
| A5A2A1 | ALC Board Assembly | 36,39 |
| A5A2A2 | Detector Board Assembly | 39 |
| A5A3 | Function Board Assembly | 42 |
| A5A4 | Pulse Driver Board Assembly | 37 |
| A5A5 | DAC and Enable Board Assembly | 44 |
| A5A6 | Switch Driver Board Assembly | 36,41 |
| A5A7 | YTM Driver Board Assembly | 38 |
| A5A8 | Motherboard Assembly | 36-38,40-44, 46,47 |
| A5A9 | Microprocessor Board Assembly | 43 |
| A5A10 | Power Supply Board Assembly | 45-47 |
| A5A11 | Regulator 2 Board Assembly | 46 |
| A5A12 | Regulator 1 Board Assembly | 46,47 |
| A5A13 | Pulse Input Assembly | 37 |
| A5A13A1 | Pulse Input Switch Board Assembly | 37 |



www.valuetronics.com

# SAFETY CONSIDERATIONS

## GENERAL

This product and related documentation must be reviewed for familiarization with safety markings and instructions before operation.

This product is a Safety Class I instrument (provided with a protective earth terminal).

## BEFORE APPLYING POWER

Verify that the product is set to match the available line voltage and the correct fuse is installed.

## SAFETY EARTH GROUND

An uninterruptible safety earth ground must be provided from the main power source to the product input wiring terminals, power cord, or supplied power cord set.

**WARNINGS**

Any interruption of the protective (grounding) conductor (inside or outside the instrument) or disconnecting the protective earth terminal will cause a potential shock hazard that could result in personal injury. (Grounding one conductor of a two conductor outlet is not sufficient protection.) In addition, verify that a common ground exists between the unit under test and this instrument prior to energizing either unit.

Whenever it is likely that the protection has been impaired, the instrument must be made inoperative and be secured against any unintended operation.

If this instrument is to be energized via an autotransformer (for voltage reduction) make sure the common terminal is connected to neutral (that is, the grounded side of the mains supply).

Servicing instructions are for use by service-trained personnel only. To avoid dangerous electric shock, do not perform any servicing unless qualified to do so.

Adjustments described in the manual are performed with power supplied to the instrument while protective covers are removed. Energy available at many points may, if contacted, result in personal injury.

Capacitors inside the instrument may still be charged even if the instrument has been disconnected from its source of supply.

For continued protection against fire hazard, replace the line fuse(s) only with 250V fuse(s) of the same current rating and type (for example, normal blow, time delay, etc.). Do not use repaired fuses or short circuited fuseholders.

## SAFETY SYMBOLS

Instruction manual symbol: the product will be marked with this symbol when it is necessary for the user to refer to the instruction manual (see Table of Contents for page references).

Indicates hazardous voltages.

Indicates earth (ground) terminal.

**WARNING** The WARNING sign denotes a hazard. It calls attention to a procedure, practice, or the like, which, if not correctly performed or adhered to, could result in personal injury. Do not proceed beyond a WARNING sign until the indicated conditions are fully understood and met.

**CAUTION** The CAUTION sign denotes a hazard. It calls attention to an operating procedure, practice, or the like, which, if not correctly performed or adhered to, could result in damage to or destruction of part or all of the product. Do not proceed beyond a CAUTION sign until the indicated conditions are fully understood and met.



www.valuetronics.com

# SECTION IV, Part 2
# PERFORMANCE TESTS

## 4-1. INTRODUCTION

In order to provide Volume 2 as soon as possible, the Full Performance Tests are omitted from this preliminary Service Manual.

Section IV, Part 1, contains the Abbreviated Performance Tests. These tests should be performed after repairing the Signal Generator. They can also be used for incoming inspection and preventative maintenance. They are not intended to be a complete check of specifications, but they will provide a limited calibration.

**NOTE**

*Specifications and characteristics apply after a 1 hour warm-up, over the temperature range of 0 to 55° C (except specifications for harmonically related spurious signals, RF output level, pulse peak level accuracy, and amplitude modulation; which apply over the range +15 to +35° C), after an AUTO PEAK operation has been performed. For additional information concerning the use of AUTO PEAK, refer to Sections 3-11 and 3-12.*



www.valuetronics.com

DEPARTMENT OF THE AIR FORCE
HQ AEROSPACE GUIDANCE AND METROLOGY CENTER (AFLC)
NEWARK AIR FORCE BASE, OHIO 43057-5475

HEWLETT-PACKARD
MODEL 11726-10004
11726A
HP-85
8673C/D

16 NOV 1990

REPLY TO
ATTN OF: MLR

SUBJECT: Manual Adjustments Procedure for Hewlett-Packard Model 8673C/D Synthesized Signal Generators.

TO: All MMS Users:

1. Hewlett-Packard Company has produced a revised chapter 5 of the 8673C/D Service Manual. This revised chapter includes instructions for using the 11726A automated alignment software with an HP-85 controller and an alternative manual alignment procedure if the software is not available.

2. Hewlett-Packard has granted the Air Force reproduction rights to make and distribute 140 copies of this section of the manual. AGMC has exercised this right and is distributing one of these copies to each PMEL that owns an 8902MS, Microwave Measurement System.

3. Please retain this letter with the enclosed copy of chapter 5 for inclusion in your service documentation for the 8673C/D. We are grateful to Hewlett-Packard for this privilege and remind all of you of that all extracts or copies of this chapter are protected under United States Copyright laws.

4. The enclosed document is Copyright (c) Hewlett-Packard Company, 1990, Reproduced by Permission.

Jack D. Dougherty

JACK D. DOUGHERTY, Chief
Electromagnetic Division
Directorate of Metrology



www.valuetronics.com

# 5

# Adjustments

## 5-1. Introduction

This chapter contains adjustments and checks that assure peak performance of the Signal Generator. This instrument should be readjusted after repair to assure performance. Allow a one hour warm-up prior to performing the adjustments. If the mains power cable is removed and reinstalled during an adjustment, be sure that the OVEN COLD status annunciator is off before proceeding with the adjustment.

Most adjustments are performed manually. However, several adjustments are performed with computer assistance using the adjustment software, HP Part Number 11726-10004, and the HP 85B as a controller. For every automated adjustment procedure there is a corresponding manual adjustment procedure for those who do not have the HP 85B Controller.

The order in which the adjustments are made is critical. Prior to making any adjustments, refer to the paragraph entitled "Related Adjustments".

Determining the adjustments to be performed after a component failure and subsequent repair or a performance test failure is important. This will help keep the adjustment time to a minimum. After the repair and/or adjustment, performance tests are usually required to verify proper performance. Refer to the paragraph entitled "Related Adjustments".

## 5-2. Safety Considerations

This chapter contains information, cautions and warnings which must be followed for your protection and to avoid damage to the equipment.

**Warning**

**Maintenance described in this chapter is performed with power supplied to the instrument and with protective covers removed. Maintenance should be performed only by service trained personnel who are aware of the hazard involved (for example, fire and electrical shock). Where maintenance can be performed without power applied, the power should be removed.**



www.valuetronics.com

**Warning (cont'd)**

**A pin-to-pin voltage difference of 60 Vdc may be found on many of the Signal Generator's circuit board connectors. If a circuit board is placed on an extender board, the possibility of coming in contact with 60 Vdc is greatly increased. The voltage could cause personal injury if contacted.**

## 5-3. Equipment Required

Each adjustment procedure contains a list of required test equipment and accessories. The test equipment is identified by callouts in the test setup diagrams included with each procedure.

If substitutions must be made for the specified test equipment, refer to Table 1-3 of the operating manual for the minimum specifications. It is important that the test equipment meet the critical specifications listed in the table if the Signal Generator is to meet its performance requirements.

YTM Tune, Flatness and ALC, and Pulse Modulation adjustment procedures are automated. Automated adjustment programs are written for specific test equipment; therefore, substitute test equipment cannot be used.

Automated adjustments require a test cassette containing the programs (HP part number 11726-10004) and an HP 85B Controller plus the Advanced Programming ROM (00085-15005), the Plotter/Printer ROM (00085-15002), and the Matrix ROM (00085-15004). The test cassette is included in the 11726A Support Kit or it can be ordered separately from your nearest Hewlett-Packard office.

## 5-4. Automated Adjustment Procedures

The adjustment software is a set of menu driven programs written in BASIC language. Adjustment programs are accessed via an executive program named "EXEC". Special function keys, which are enabled by software, select individual adjustment procedures and test routines from the executive program's main menu. Labels for enabled special function keys are displayed on the bottom two lines of the controller's CRT screen.

To load the adjustment software, insert the tape cassette into the controller's tape drive, type the command LOAD "Autost" and then press END LINE. When the tape stops, press RUN. The calculator will then display the title screen (see figure 5-1).



www.valuetronics.com

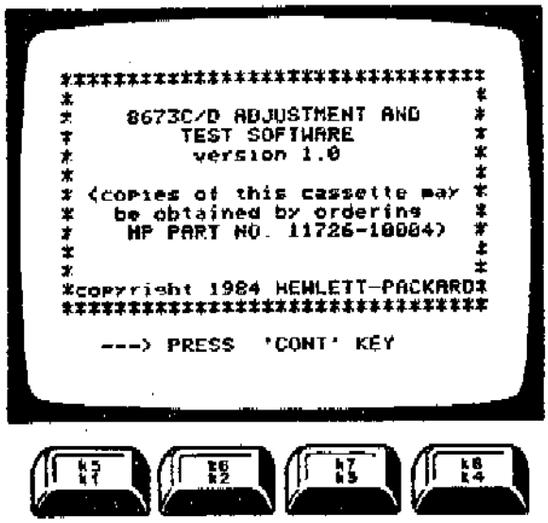


**Figure 5-1. Title Screen**

The title screen identifies the software version and cassette tape part number. Version 1.0 revision B or later is used to test the HP 8673C/D.

After the title screen is displayed, press the 'CONT' key. The "Autost" program will ask several hardware related questions, then test the HP Interface Bus for proper operation. In addition, the Signal Generator is preset. After the checks are completed, the "EXEC" program will be loaded and run. The main menu of adjustments is displayed (see figure 5-2).

**Note**

"Autost" may be bypassed if desired by initially loading "EXEC" program instead.

Press the special function key (k1 through k8) that corresponds to the adjustment or test that you want to perform. The appropriate program is loaded by the "EXEC" program and executed.

See figure 5-3 for a flowchart of the adjustment software as it relates to the special function keys. Below the figure is a brief description of each item in the "EXEC" program's menu. Detailed descriptions of individual adjustments are included in the appropriate adjustment procedure.



www.valuetronics.com

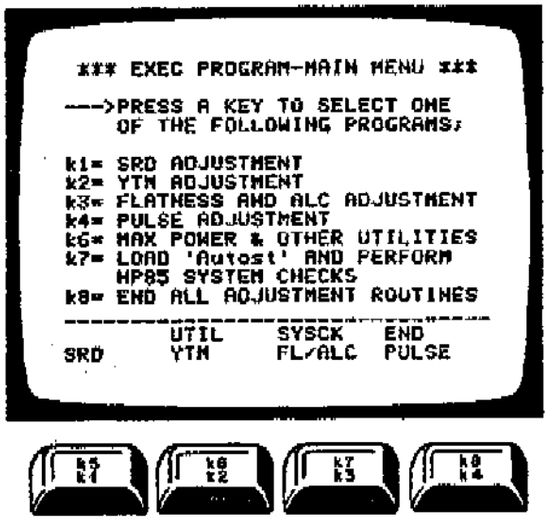


Figure 5-2. Main Menu

## 5-5. Adjustment Procedures Format

The adjustment procedures contained in this chapter are assigned individual paragraph numbers. Extensive use of notes has been made to clarify the applicability of each procedure, when two or more procedures (manual or automated) are provided relative to the same adjustment. The Service Technician should have no difficulty choosing the procedure best suited to the instrument he is working with.

## 5-6. Factory Selected Components

Factory selected components are identified on the schematics and parts list by an asterisk (*) that follows the reference designator. The nominal value of the component is shown. *Manual Updates* will provide updated information pertaining to selected components. Table 5-1 lists the reference designator, the service sheet where the component is shown, the normal value range, and the criteria used for selecting a particular value.



www.valuetronics.com

## 5-7. Related Adjustments

If all the adjustments are to be performed, they should be done in order of appearance in this manual.

In the event of a performance test or component failure, it must be determined if an individual adjustment procedure should be performed or if the instrument should be repaired. Tables 5-2 and 5-3 indicate the required action in either case.

After the instrument is repaired or adjusted, "Performance Tests" in chapter 4 must be performed to verify proper operation of the Signal Generator. Tables 5-2 and 5-3 can also be used as a guideline when repairing or adjusting the instrument.

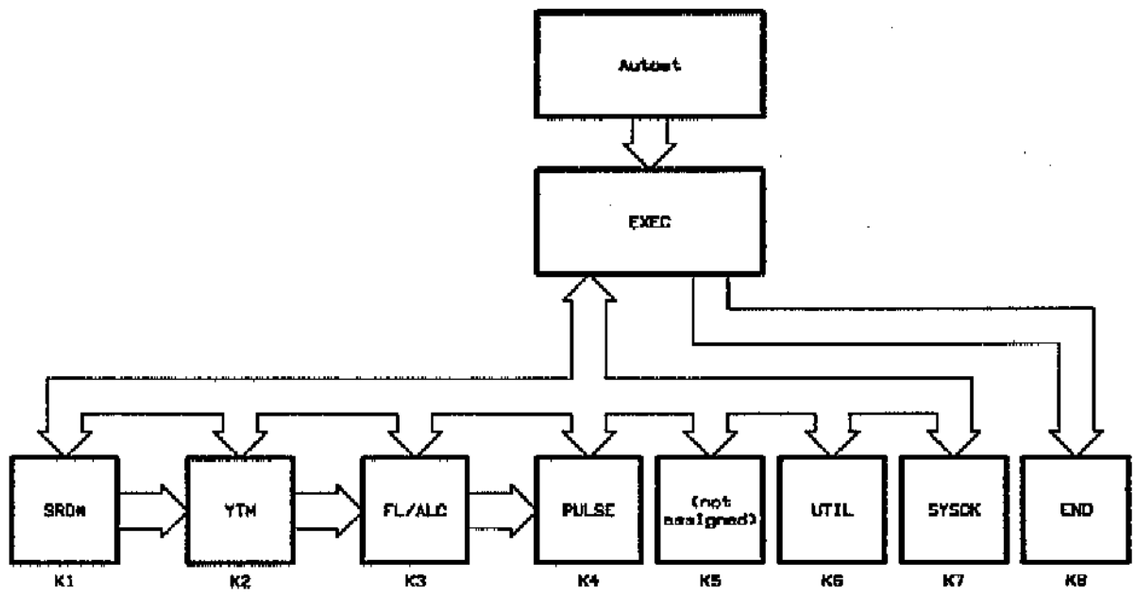


* SRD is not used on HP 8673C/D with serial number prefixes 2522A, 2634A and above.

**Figure 5-3. Special Function Keys**



www.valuetronics.com

## Adjustment Software

| Key | Name | Description |
|---|---|---|
| | Autost | Autostart program. Contains system hardware checks. Loads and runs EXEC program. Automatically loads and runs if the tape cassette is in the tape drive when power is applied to the controller. |
| | EXEC | Executive program. Allows access to the individual adjustment procedures and test routines via special function keys, as selected by the user. |
| k1 | SRD | Not used on the HP 8673C/D with serial number prefixes 2522A, 2634A, and above. |
| k2 | YTM | YTM Tune Adjustment. Accessed through EXEC or SRD "Load Next Test" function. |
| k3 | FL/ALC | Flatness and ALC Adjustment. Accessed through EXEC or YTM "Load Next Test" function. |
| k4 | PULSE | Pulse Adjustments. Accessed through EXEC or FL/ALC "Load Next Test" function. |
| k6 | UTIL | Utility programs. Tests for maximum power, verification of HP-IB and management of power meter calibration factors. |
| k7 | SYSCK | Loads and executes Autost. |
| k8 | END | Terminates all adjustment programs. Accessed through EXEC. |



www.valuetronics.com

**Table 5-1. Factory Selected Components**

| Reference Designator | Service Sheet | Range of Values | Basis of Selection |
|---|---|---|---|
| A1A2A1C18 | 14 | 30 to 47 pF | Selected for correct frequency response in the AM bandwidth. Perform AM bandwidth Adjustment. |
| A3A1A2C8 and A3A1A2L4 | 2 | 0 to 12.0 pF<br>0.22 to 6.8 μH | 100 MHz VCXO Assembly. Centers the frequency adjustment range of A3A1A2C4 around 100 MHz. Refer to the Reference Loop (VCXO) Adjustment procedure. |
| A3A1A2R67, R68, and R69 | 2 | Refer to Table in VCXO adjustment | 100 MHz VCXO Assembly. Required change in attenuation necessary for a −10 dBm output level of the 400 MHz signal. Refer to the Reference Loop (VCXO) Adjustment procedure. |
| A3A1A5C38, R36, R40, and R41 | 5 | R36: 82.5 or 56.2Ω<br>R41: 100Ω or deleted<br>R40: 51.1Ω or C38 at 27 pF | M/N Loop 5—45 MHz IF Output. If the power output from the IF OUT jack (A3A1A5J2) is less then −5 dBm at any frequency between 5 MHz to 45 MHz, replace R36 82.5Ω with a 56.2Ω resistor, R40 51.1Ω with C38 27 pF capacitor, and remove R41. Proper power output level is 0 ± 5 dBm from 5 to 45 MHz. If this range cannot be met, service may be required. |
| A3A3R43 | 34 | 12 to 14.7 kΩ | Positive Regulator Assembly. Select so that pin 2 of V1 Power Up/Down Detector is 0.1 to 0.2V lower than the +5.2V Power Supply. |
| A3A7C48 | 13 | 3.9 to 5.6 pF | YTO/FM/Coil Driver Assemby. Selected for frequency response on the 100 kHz and lower FM deviation ranges. Use figure 4-9, FM Frequency Response Test Setup (test oscillator and spectrum analyzer only). Set the test oscillator's controls so the spectrum analy zer's display of the first FM sidebands are 30 dB down from the carrier at 1 MHz. At 3.16 MHz the sidebands should be 40 dB down; at 10 MHz, 50 dB down. If the response is peaking (sidebands are too high), insert a smaller value capacitor. If the response is rolling off (sidebands are too low), insert a larger value capacitor. |
| A3A7R61, R65, and R75 | 13 | Refer to table | YTO/FM/Coil Driver Assembly. FM sensitivity is changed by replacing R61, R65 and R75 as a set. Except for the spectrum analyzer, connect equipment as shown in figure 4-9, FM Frequency Response Test Setup (omit frequency counter). Connect the spectrum analyzer to the junction of A3A9J1 and A3A9J2. Set the Signal Generator to 10 MHz deviation range. Set the test oscillator's output level for the first carrier null (deviation approximately 240 kHz) at a 100 kHz rate. Measure the test oscillator FM drive voltage. The normal value is between 15.42 and 18.86 mV. Change R61, R65 and R75, using the values in the following table, to obtain the normal ac value. Voltage can be raised or lowered by the approximate increments shown in the table that follows: |



www.valuetronics.com

**Table 5-1. Factory Selected Components (continued)**

| Reference Designator | Service Sheet | Range of Values | Basis of Selection |
|---|---|---|---|

| Resistor | Nominal Value | Raise Voltmeter Reading | | Lower Voltmeter Reading | |
|---|---|---|---|---|---|
| | | +1 mV | +2.5 mV | −0.75 mV | −1.5 mV |
| R61 | 1.96 kΩ | 1.78 kΩ | 1.62 kΩ | 1.96 kΩ | 1.96 kΩ |
| R65 | 5.11 kΩ | 6.19 kΩ | 6.19 kΩ | 4.64 kΩ | 3.83 kΩ |
| R75 | 1.82 kΩ | 1.78 kΩ | 1.78 kΩ | 1.96 kΩ | 2.15 kΩ |

| | | | |
|---|---|---|---|
| A3A9A5C10 | 11 | 20—22 pF | Sampler Assembly. Centers YTO phase detector sampler response. Refer to "YTO Loop Sampler Adjustments". |
| A3A9A5C22 | 11 | 120—150 pF | Selected for proper IF gain. Perform "YTO Loop Sampler Adjustments". |
| A3A9R20 | 12 | 348Ω to 1.21 kΩ | YTO Loop Assembly. Sets YTO Loop gain crossover of 20 ± 2 kHz. Refer to "YTO Loop Phase Detector Adjustments". |



www.valuetronics.com

**Table 5-2. Performance Test Failure and Required Action**

| Performaqnce Test Failure | Required Action |
|---|---|
| Frequency Range and Resolution | Check phase lock loops. See BD2, 3, and 4. |
| Output Level, High Level Accuracy and Flatness | Perform Flatness and ALC adjustment. Check output attenuator. See BD5 and 6. |
| Low Level Accuracy | Check attenuator and attenuator driver. See to BD5 and 6. |
| Harmonics, Subharmonics and Multiples | Perform YTM Tune, YTF and Flatness and ALC adjustments. Check YTM, YTF, and passive filters. See BD5. |
| Non-Harmonically Related Spurious Signals (CW and AM Modes) | This problem can occur anywhere in the instrument. Isolate the defective component and make adjustments as required (see table 5-3). *NOTE:* If the problem is in Band 1 (2.0 to 6.6 GHz), the output of the A3 RF Source section, W7, should be checked. |
| Power Line Related Spurious | Refer to Chapter 8, Power Supply Schematics. |
| Single-Sideband Phase Noise | Perform 20/30 MHz (LFS) Loop Divider Bias, 160—240 MHz (20/30 MHz or LFS Loop) VCO Pretune, M/N Loop, YTO Driver, YTO Loop Sampler, YTO Loop Offset and FM Overmodulation, and FM Driver adjustments. Check the YTO Loop for phase lock to within 1 Hz resolution. *NOTE:* An efficient troubleshooting technique is to isolate the problem to one of the phase lock loops, if possible, and then perform the adjustment for that loop. See BD2, 3 and 4. |
| AM<br>Meter Accuracy<br>Accuracy Relative to External<br>AM Input<br>Incidental Phase Modulation<br>AM Rates (3 dB bandwidth) | Perform AM Accuracy and Meter adjustments.<br><br>Troubleshoot the AM and ALC circuits. See BD5 and 6.<br>Repair AM, YTM, or ALC circuits.<br>Perform AM Bandwidth adjustment. |
| FM Frequency Response | Perform FM Driver and FM Accuracy and Overmodulation adjustments. See BD4. |
| FM Input and Meter Accuracy | Perform FM Driver and FM Accuracy and Overmodulation adjustments. See BD4. |
| Incidental AM | Repair or adjust the YTM and ALC circuits. See BD1, 5, 6 and 7. |
| Pulse | Repair or adjust YTM, ALC and pulse circuits. See BD1, 5, 6 and 7. |



www.valuetronics.com

**Table 5-3. Post-Repair Adjustments**

| Repaired Assembly | Adjustments |
|---|---|
| A1A2 — Detector Module Assembly | Flatness and ALC<br>AM Bandwidth<br>AM Accuracy and Meter |
| A1A3 — Functions Board Assembly | AM Accuracy and Meter<br>FM Accuracy and Overmodulation |
| A1A4 — Pulse Driver Processing Board Assembly | Flatness and ALC<br>Pulse Modulation<br>Pulse Amplitude Control |
| A1A5 — DAC and Enable Board Assembly | Pulse Modulation<br>Pulse Amplitude Control |
| A1A6 — Meter Board Assemby | AM Accuracy and Meter<br>FM Accuracy and Overmodulation |
| A1A7 — YTM Driver Board Assembly | YTM Tune |
| A1A8 — SRD Bias Board Assembly | SRD Bias<br>Flatness and ALC<br>Pulse Modulation<br>Pulse Amplitude Control |
| A1A9 — Preamp Assembly | Flatness and ALC<br>AM Bandwidth<br>AM Accuracy and Meter |
| A1A10 — YTM Assembly | SRD Bias<br>YTM Tune<br>Flatness and ALC<br>AM Bandwidth<br>AM Accuracy and Meter<br>Pulse Modulation<br>Pulse Amplitude Control |
| A1A11 — Power Amplifier Assembly | Power Clamp<br>Flatness and ALC<br>Pulse Modulation — Pulse Clamp and ALC Sample Pulse portions only |
| A1AT2 — Isolator | None |
| A1AT3 — Pulse Modulator | Pulse Modulation |
| A1CP1 — Bias Tee | Pulse Amplitude Control |
| A1CR1 — Crystal Detector | Flatness and ALC<br>Pulse Modulation — ALC Sample Pulse portion only |



www.valuetronics.com

**Table 5-3. Post-Repair Adjustments (continued)**

| Repaired Assembly | Adjustments |
|---|---|
| A1AR1 K-Band Amplifier Assembly | YTM Tune<br>Power Clamp<br>Flatness & ALC<br>AM Bandwidth<br>AM Accuracy and Meter<br>Pulse Modulation<br>Pulse Amplitude Control |
| A1DC1 — Directional Coupler | Flatness and ALC<br>Pulse Modulation — ALC Sample Pulse portion only |
| A1FL1 — High-Pass Filter | Pulse Modulation<br>Pulse Amplitude Control |
| A2A3, A2A4, A2A5 — LFS Loop Circuits 20/30 | MHz Loop Divider<br>160—240 MHz (20/30 MHz or LFS Loop) VCO Pretune<br>LFS Loop Filter |
| A2A7 — I/O Assembly | Sweep Out and Blanking/Marker |
| A3A1, A3A3, A3A4 — Power Supplies | Power Supply |
| A3A1A1, A3A1A2 — Reference Loop Circuits | Reference Loop |
| A3A1A3, A3A1A4, A3A1A5 — M/N Loop Circuits | M/N Loop |
| A3A5 — DAC Assembly<br>A3A6 — YTO Driver Assembly | YTO Pretune Digital-to-Analog Converter<br>YTO Driver<br>YTO Loop Sampler<br>YTO Offset and FM Overmodulation<br>YTO Loop Phase Detector |
| A3A7 — YTO FM Coil Driver Assembly | YTO Pretune Digital-to-Analog Converter<br>YTO Driver<br>YTO Loop Sampler<br>YTO Offset and FM Overmodulation<br>YTO Loop Phase Detector<br>FM Driver |
| A3A8 — 10 MHz Crystal Reference Assembly | 10 MHz Reference Oscillator |
| A3A9A3 — 2.0 to 6.6 GHz YTO Assembly | YTO Pretune Digital-to-Analog Converter<br>YTO Driver<br>YTO Loop Sampler<br>YTO Offset and FM Overmodulation<br>YTO Loop Phase Detector<br>FM Driver<br>FM Accuracy and Overmodulation |
| A5A1 — Front Panel and Meter Board Assembly | LO Band Meter |
| A5A2 — ALC/Detector Board Assembly | LO Band Flatness and ALC<br>LO Band AM Bandwidth<br>LO Band AM Accuracy and Meter<br>Pulse Level Accuracy |



www.valuetronics.com

**Table 5-3. Post-Repair Adjustments (continued)**

| Repaired Assembly | Adjustments |
|---|---|
| A5A3 — Function Board Assembly | LO Band AM Accuracy<br>LO Band External ALC |
| A5A4 — Pulse Driver Board Assembly | LO Band Pulse |
| A5A5 — DAC & Enable Board Assembly | YTM Peaking<br>YTF Peaking |
| A5A6 — Switch Driver Board Assembly | LO Band Flatness & ALC |
| A5A7 — Yig Driver Board Assembly | YTF |
| A5A9 — Microprocessor Board Assembly | None |
| A5A10 — Power Supply Board Assembly | Power Supplies |
| A5AR1 — Amplifier | Low Band ALC and Flatness |
| A5AT1 — Isolator | None |
| A5AT2 — Pulse Modulator | Low Band Pulse |
| A5AT3 — ALC Modulator | Low Band ALC and Flatness<br>Low Band AM |
| A5B1 — Fan Assembly | None |
| A5CP1 — Bias Tee | Low Band Pulse |
| A5CR1 — Crystal Detector | LO Band Flatness and ALC<br>LO Band Pulse Level Accuracy |
| A5FL1, 3, 4 Filters | ALC and Flatness |
| A5FL2 — YTF | YTF<br>Low Band Pulse |
| A5G2 — 4.2 GHz Oscillator | Low Band ALC and Flatness<br>Low Band AM |
| A5K1, K2 | Low Band ALC and Flatness<br>Low Band AM |
| A5U1 — Mixer | LO Band Level Accuracy<br>LO Band Pulse |



www.valuetronics.com

## 5-8. Power Supply Adjustments

**Reference** Service Sheets 33, 34, 35, 46, 47

**Description** Adjust the +22 volt and +20 volt power supplies in the A3 Assembly to their required tolerance. Check the remaining supply voltages referenced to the +20 volt supply (+11V, +5.2V, −5.2V, −10V, and −40V). Adjust the +20V, +5.2V, +28V, −40V, −10V power supplies in the A5 Assembly. Check the +15V supply to the required tolerance.

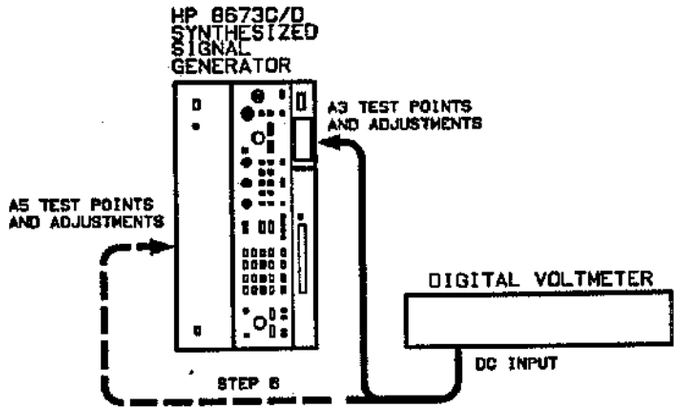


**Figure 5-4. Power Supply Adjustment Test Setup**

**Equipment** Digital Voltmeter (DVM)..... HP 3456A

**Procedure**

1. Set the Signal Generator's rear panel FREQ STANDARD INT/EXT switch to INT.
2. Place the A5A9 Bd in the test position (service sheet B "Disassembly"). Place the instrument up on its side for easy access to all adjustments. See figure 5-4.
3. Connect the DVM input to A3A12TP1 on the Rectifier Assembly.
4. Adjust +22 ADJ (A3A12R2) for a DVM reading of +22.00 ± 0.02 Vdc.
5. Connect the DVM input to A3A3TP5 on the Positive Regulator Assembly.
6. Set +20 ADJ (A3A3R50) for a DVM reading of +20.000 ± 0.002 Vdc.
7. Check the power supplies shown in the following table. All voltages should be within tolerance.



www.valuetronics.com

| Power Supply | Test Point | Power Supply Voltage (Vdc) | |
|---|---|---|---|
| | | Min. | Max. |
| +11 Vdc | A3A3TP6 | +9.9 | +12.1 |
| +5.2 Vdc | A3A3TP2 | +5.1 | +5.3 |
| −5.2 Vdc | A3A4TP5 | −5.1 | −5.3 |
| −10 Vdc | A3A4TP4 | −9.8 | −10.2 |
| −40 Vdc | A3A4TP1 | −39.00 | −40.60 |

8. Connect the DVM input to each test point listed below and adjust the voltage within the min and max voltages listed.

| Power Supply | Test Point | Adjustment Pot | Power Supply Voltage (Vdc) | |
|---|---|---|---|---|
| | | | Min. | Max. |
| +20 | A5A10TP11 | A5A10R9 | +19.95 | +20.05 |
| +5.2V | A5A10TP10 | A5A10R39 | +5.20 | +5.25 |
| −10V | A5A10TP9 | A5A10R41 | −10.05 | −9.95 |
| −40V | A5A10TP8 | A5A10R44 | −40.05 | −39.95 |
| +28V | A5A10TP2 | A5A10R6 | +27.95 | +28.05 |
| +15V | A5A10TP1 | No Adjustment | +14 | +16 |



www.valuetronics.com

## 5-9. 10 MHz Reference Oscillator Adjustment

**Reference** Service Sheet 1

**Description** Connect the reference signal from the Signal Generator (10 MHz OUT) to the oscilloscope's vertical input. A frequency standard (with long term stability greater than $1 \times 10^{-10}$) is connected to the trigger input. Adjust the A3A8 Assembly's FREQ adjustment for a minimum drift rate.

**Equipment**

| | |
|---|---|
| Frequency Standard | HP 5065A |
| Oscilloscope | HP 1980B |

**Note**

Be sure the Signal Generator has had one hour to warm up before performing the adjustment. Verify that the OVEN COLD and $\phi$ UNLOCKED status annunciators are off. If necessary, refer to the troubleshooting information in chapter 8.

**Procedure**

1. Set the Signal Generator's rear panel FREQ STANDARD INT/EXT switch to the INT position.
2. Connect the equipment as shown in figure 5-5. Set vertical input of oscilloscope for 50Ω input impedance.
3. Set the FREQ adjustment (on the A3A8 10 MHz Reference Oscillator Assembly) so the signal, as observed on the oscilloscope display, is not drifting.
4. Verify that in 10 seconds the display drifts less than 360°. A drift of 360° in 10 seconds corresponds to an adjustment accuracy of $1 \times 10^{-8}$. Adjustment accuracy is not specified for this instrument; the numbers shown are what can typically be obtained.

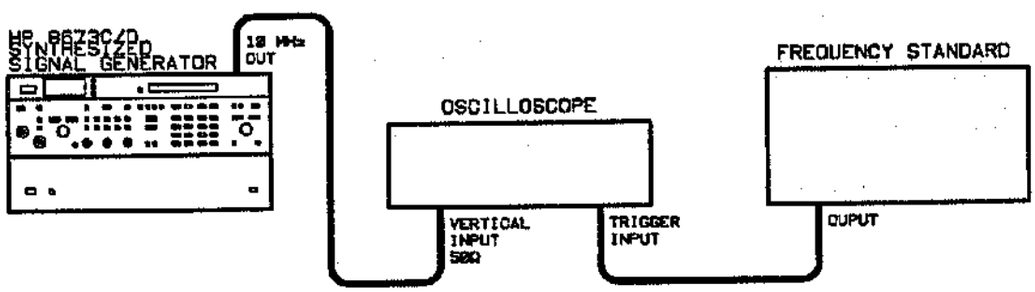


**Figure 5-5. 10 MHz Reference Oscillator Adjustment Test Setup**



www.valuetronics.com

## 5-10. Reference Loop (VCXO) Adjustment

**Reference** Service Sheet 2

**Description** The open loop frequency and maximum power output of the 100 MHz VCXO is centered around 100 MHz. The output is set as close as practical to 100 MHz. The 400 MHz signal is adjusted for maximum 400 MHz output and minimum spurious signal output. An attenuator is selected to provide a 400 MHz output of −10 dBm.

**Equipment**

| | |
|---|---|
| Frequency Counter | HP 5343A |
| Spectrum Analyzer | HP 8566B |
| Power Supply | HP 6202B |
| Power Meter | HP 436A |
| Power Sensor | HP 8485A |
| Digital Voltmeter (DVM) | HP 3456A |

**Procedure**

1. Connect the frequency counter to A3A1A2J2 in place of the termination and connect the spectrum analyzer to A3A1A2J1 in place of the gray-orange-white cable, as shown in figure 5-6.

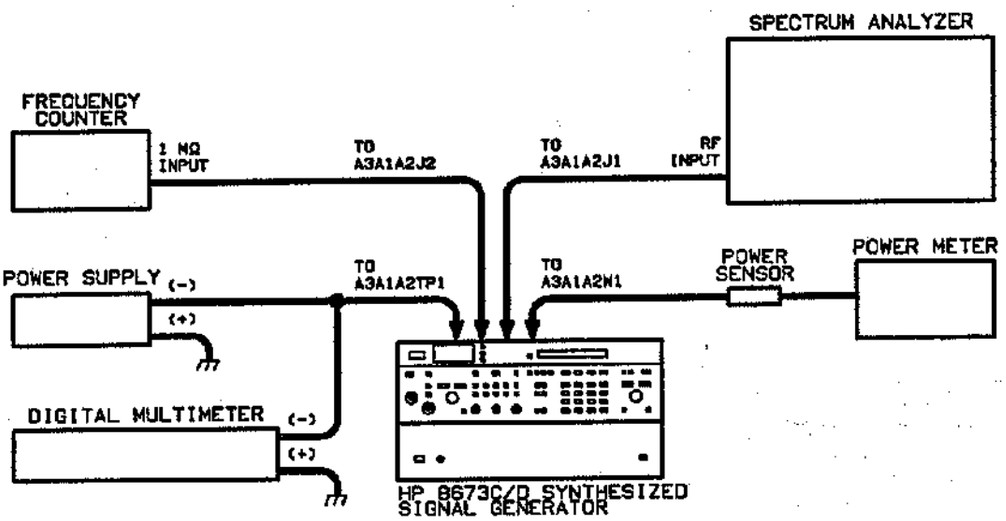


**Figure 5-6. Reference Loop (VCXO) Adjustment Test Setup**

2. Set the output of a low voltage power supply to −8.00 ± 0.01 Vdc. Connect the positive lead to ground and the negative lead to A3A1A2TP1, 100 MHz TUNE.
3. Tune A3A1A2C4, 100 MHz, for the maximum 100 MHz signal level as viewed on the spectrum analzyer display.
4. Tune A3A1A2C4 to increase the frequency (and decrease the amplitude) until the oscillation stops on the high frequency



www.valuetronics.com

side; then tune A3A1A2C4 to start the oscillation. Continue to decrease the frequency until the oscillation stops. If the VCXO does not stop oscillating at the high end, decrease the value of A3A1A2C8 by 1 pF from its present value. If it does not stop at the low end, increase the value of A3A1A2C8 by 1 pF. If a change is necessary, repeat this step. If a value of A3A1A2C8 cannot be found within the range of 0 to 12 pF, change A3A1A2L4. (The range of values for A3A1A2L4 is listed in step 7.) Then repeat this step.

5. Adjust A3A1A2C4 to obtain the maximum signal level as viewed on the spectrum analyzer display. Slowly tune to a higher frequency until the power drops by 1 dB. Record $\Delta F_1$, that is, how far the 1 dB point is above 100 MHz. Use the frequency counter to make the measurements to 10 Hz resolution.

   _____ $\Delta F_1$

6. Tune to a lower frequency until the power is decreased 1 dB on the other side of the peak. Record $\Delta F_2$, that is, how far the 1 dB point is below 100 MHz.

   _____ $\Delta F_2$

7. The VCXO centering about 100 MHz is correct if

$$0.5 \leq \frac{\Delta F_1}{\Delta F_2} \leq 2$$

   If the ratio is less than 0.5, decrease A3A1A2L4 one value to increase the center frequency. If the ratio is greater than 2, increase A3A1A2L4 one value to decrease center frequency. Refer to the following table for the inductor values.

**A3A1A2L4 Inductor Values**

| Value | HP Part Number |
|---|---|
| 0.68 μH | 9140-0141 |
| 0.56 μH | 9100-2256 |
| 0.47 μH | 9100-2255 |
| 0.39 μH | 9100-2254 |
| 0.33 μH | 9100-0368 |
| 0.27 μH | 9100-2252 |
| 0.22 μH | 9100-2251 |

8. If the inductor value is changed, repeat steps 3 through 7.
9. Adjust A3A1A2C4 to obtain a VCXO output of 100 MHz ±100 Hz.
10. Disconnect the spectrum analyzer from A3A1A2J1 and reconnect the gray-orange-white cable.
11. Disconnect the 400 MHz Output cable (gray-red-white cable) from A3A1A5J1 and connect the cable to the spectrum



www.valuetronics.com

analyzer. Set the spectrum analyzer's controls for a center frequency of 500 MHz, frequency span per division 100 MHz, and vertical sensitivity per division 10 dB log. Adjust the 400 MHz A3A1A2C3, C2, and C1 adjustments in that order to obtain the maximum 400 MHz signal with the lowest harmonic levels possible.

12. Check the various harmonics of the 100 MHz signal relative to the 400 MHz signal level. The 200 and 800 MHz harmonics should be greater than 25 dB down; 100, 300, 500, 600, 700, and 900 MHz harmonics should be greater than 35 dB down. If necessary, repeat steps 11 and 12.
13. Disconnect the spectrum analyzer from the gray-red-white cable and connect the cable to the power meter.
14. Check the power meter reading. The power should be −10 to −13 dBm. If the power is incorrect, select the values of A3A1A2R67, R68, and R69 from the table below to obtain the proper power level. The attenuation should always be 3 dB or greater.

| Attenuation (dB) | Resistors (ohms) | | |
|---|---|---|---|
| | R67 | R68 | R69 |
| 3 | 261 | 17.8 | 261 |
| 4 | 215 | 23.7 | 215 |
| 5 | 178 | 31.6 | 178 |
| 6 | 147 | 38.3 | 147 |
| 7 | 133 | 46.4 | 133 |
| 8 | 121 | 51.1 | 121 |
| 9 | 110 | 61.9 | 110 |

15. If the amount of attenuation is changed, recheck the harmonic levels.
16. Set the Signal Generator's LINE switch to STBY. Disconnect all test equipment except the DVM and reconnect all instrument cables.
17. Set the Signal Generator's LINE switch to ON. Verify that the dc voltage at A3A1A2TP1 is 8 ±1 Vdc. If the voltage is out of tolerance, repeat step 9 or check the 10 MHz Reference Adjustment.
18. Connect the frequency counter to the Signal Generator's RF OUTPUT connector.
19. Verify that the counter reading is within ±1 kHz of the Signal Generator's FREQUENCY MHz display at 2.0 and 6.6 GHz.



www.valuetronics.com

## 5-11. M/N Loop Adjustments

**Reference** Service Sheet 4

**Description** The M/N loop frequency is set to track tuning voltage across the frequency range. The output level is set and checked to ensure an adequate RF output level across the band.

**Equipment**

| | |
|---|---|
| Digital Voltmeter (DVM) | HP 3456A |
| Frequency Counter | HP 5343A |
| Spectrum Analyzer | HP 8566B |
| Power Supply | HP 6202B |

**Procedure**

1. On the Signal Generator, key in RCL 0 and set the frequency to 6090.000 MHz. Set the FREQ STANDARD INT/EXT on the rear panel to INT.
2. Connect the equipment as shown in figure 5-7.

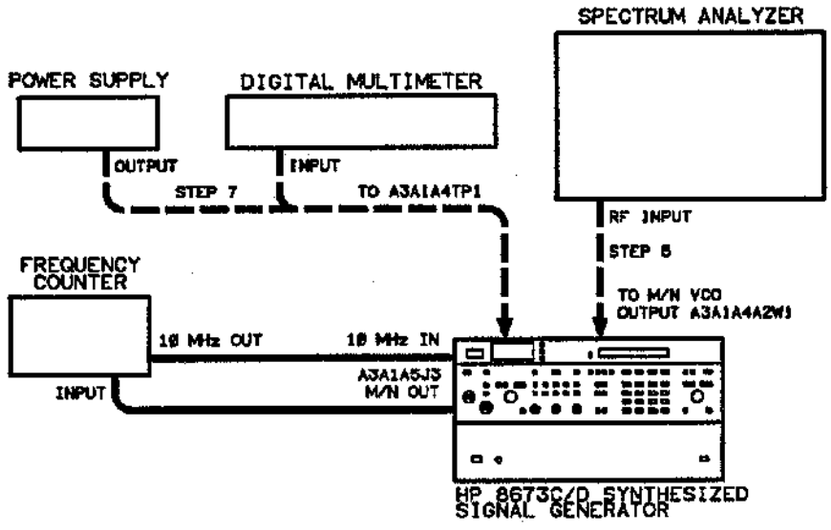


**Figure 5-7. M/N Loop Adjustment Test Setup**

3. Verify that the M/N output frequency is exactly 197.419 MHz ±1 kHz.

**Warning** **Because this circuit board is being placed on an extender board, the possibility of coming in contact with 60 Vdc is greatly increased. The voltage could cause personal injury if contacted.**

4. Set the LINE switch to STBY and disconnect the mains power cable. Remove the A3A1A4/A5 Assembly and place it on an extender board.



www.valuetronics.com

5. Connect the spectrum analyzer input to the M/N VCO output A3A1A4A2W1 (white coax).

**Caution**

Do not apply a positive voltage to A3A1A4TP1. A positive voltage will forward bias the VCO tuning diodes and may destroy them.

6. Connect the mains power cable and set the LINE switch to ON.
7. Set the power supply for −35.0 ±0.5 Vdc. Connect the positive output of the power supply to ground and connect the negative output to the A3A1A4TP1 TUNE.

**Note**

The adjustment screws for A3A1A4A1C1 and C5 are held in place by locknuts. After making the adjustment, tighten the locknuts and recheck the frequency and level.

8. Release the locknut for the PWR adjustment, A3A1A4A1C5. Adjust A3A1A4A1C5 for an output level of 0 ±2 dBm. Tighten the locknut.
9. Slowly reduce the dc voltage at A3A1A4TP1, TUNE, while monitoring the VCO output power on the spectrum analyzer. The output power should be greater than −2 dBm between 395 MHz (−35 Vdc) and 355 MHz (−2.3 Vdc).
10. Remove the power supply connection to A3A1A4TP1.
11. Set the LINE switch to STBY and disconnect the mains power cable. Remove A3A1A4/A5 from the extender board and reinstall the assembly in the Signal Generator.
12. Connect the mains power cable and set the LINE switch to ON. Verify that the frequency is still at 6090.000 MHz.
13. Set FREQ ADJ A3A1A4A1C1 for a voltage level of −35.0 ±0.5 Vdc, measured at A3A1A4TP1.
14. Tune the Signal Generator frequency to 2100.000 MHz. Verify that the M/N output frequency is 177.500 MHz and the tuning voltage is −2.4 ±0.7 Vdc.
15. Disconnect all test equipment from the Signal Generator and reconnect all instrument cables.
16. Connect the frequency counter to the Signal Generator's RF OUTPUT connector.
17. Verify that the counter reading is within ±1 kHz of the Signal Generator's FREQUENCY MHz display at 2.0 and 6.6 GHz.



www.valuetronics.com

## 5-12. 20/30 MHz (LFS) Loop Divider Bias Adjustment

**Reference** Service Sheet 6

**Description** A substitute VCO feedback signal, derived from an external RF signal source, is monitored with an oscilloscope. The RF signal level is slowly reduced and the CLK BIAS ADJ is set to obtain a stable clock signal. The RF input is reduced to the minimum level that provides a stable signal.

**Equipment**

| | |
|---|---|
| Oscilloscope | HP 1980B |
| Signal Generator | HP 8640B |

**Procedure**

1. Set the LINE switch to STBY.
2. Remove the screws that hold the A2A5 20/30 MHz Divider Assembly in place.

**Warning** **Because this circuit board is being placed on an extender board, the possibility of coming in contact with 60 Vdc is greatly increased. The voltage could cause personal injury is contacted.**

3. Remove the A2A5 Assembly, place it on an extender board, and reinstall the assembly.
4. Set the LINE switch to ON.
5. Set the controls of the signal generator in the test setup for continuous wave output of −5 dBm at 240 MHz.
6. Remove the red cable A2W1 from the 160/240 MHz INPUT, A2A5J1.
7. Connect the equipment as shown in figure 5-8.

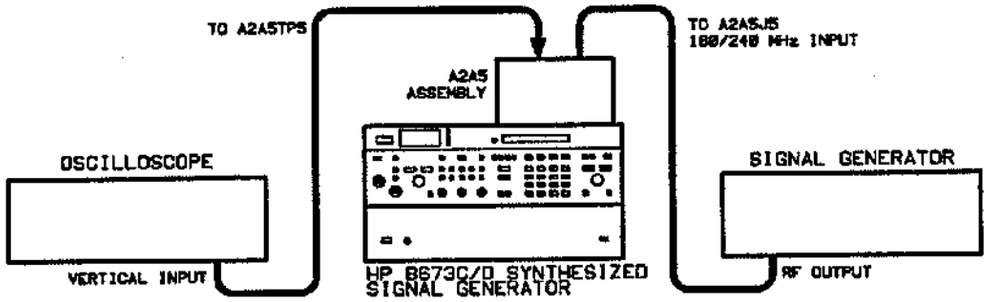


**Figure 5-8. 20/30 MHz (LFS) Loop Divider Bias Adjustment Test Setup**

8. Center A2A5R4 (CLK BIAS ADJ).
9. Observe the clock signal on the oscilloscope display.



www.valuetronics.com

10. Adjust A2A5R4 to obtain a stable clock frequency.
11. Reduce the output level of the signal generator in the test setup while readjusting A2A5R4 to obtain a stable clock at the lowest possible signal.
12. Verify that a stable clock signal is obtained with an input signal of −10 dBm or less.
13. Disconnect the test equipment. Set the Signal Generator to STBY and reinstall A2A5 in its cavity. Reconnect cable A2W1 to A2A5J1.



www.valuetronics.com

## 5-13. 160—240 MHz (20/30 MHz or LFS Loop) VCO Pretune

**Reference** Service Sheet 8

**Description** If any of the 160—240 MHz oscillator components have been replaced, the low and high frequency limits of the oscillator must be checked to ensure proper operation. The oscillator coil is moved closer to or away from the circuit board in order to set the low and high frequency limits.

**Equipment** Frequency Counter ..... HP 5343A

**Note** This procedure need be performed only if major repair has been done to the oscillator.

**Procedure**

1. Set the LINE switch to STBY.
2. Remove the screws that hold the A2A3 VCO assembly in place.

**Warning** **Because this circuit board is being placed on an extender board, the possibility of coming in contact with 60 Vdc is greatly increased. The voltage could cause personal injury if contacted.**

3. Remove the A2A3 assembly, place it on an extender board, and reinstall the assembly.
4. Remove the green cable A3W14 that is connected to the 20/30 MHz OUTPUT A2A3J1. Connect the frequency counter output to A2A3J1.
5. Set the LINE switch to ON.
6. Set A2A3S1 (FREQ TEST SWITCH) to the TEST HIGH FREQ position. The frequency should be greater than 30.5 MHz.
7. If the frequency is less than 30.4 MHz, the oscillator coil must be moved closer to the circuit board. The oscillator cover must be removed before adjusting the coil. Unsolder the four corners of the oscillator cover before removing it. Next, unsolder the oscillator coil leads, move the coil closer to the circuit board, and resolder the coil leads. Clip excess oscillator lead length on the circuit side of board if necessary.

**Note** The oscillator coil is normally mounted parallel to the circuit board with the bottom threads approximately 1.3 mm (0.050 inch) above the board.

8. Replace the oscillator cover by temporarily soldering one corner of the cover. Then recheck the frequency.



www.valuetronics.com

9. Set A2A3S1 to the TEST LOW FREQ position. Verify a frequency reading of less than 19.5 MHz. If necessary, set the LINE switch to STBY, remove the cover, reset the coil, replace the cover, and repeat steps 6 through 9.
10. Set A2A3S1 to the NORMAL position.
11. Replace the oscillator cover permanently by soldering all four corners. Do not solder the entire perimeter of the oscillator cover. The cover is for frequency stability, not for RFI leakage.
12. Set the LINE switch to STBY. Reinstall A2A3 in its cavity and reconnect the green cable to A2A3J1.



www.valuetronics.com

## 5-14. LFS Loop Notch Filter Adjustment

**Note** This procedure applies only to instruments with serial number prefixes 2704A and below. In other instruments, adjustable parts have been replaced by fixed-value components.

**Reference** Service Sheet 7

**Description** A 7985 Hz signal is passed through the 8 kHz notch filter. The adjustable components are set for the minimum signal transfer.

**Equipment**

| | |
|---|---|
| Test Oscillator | HP 3335A |
| Frequency Counter | HP 5343A |
| AC Voltmeter | HP 400E |
| 3 dB Attenuator | HP 8491A Option 003 |

**Procedure**

1. Set the LINE switch to STBY.

**Warning** **Because this circuit board is being placed on an extender board, the possibility of coming in contact with 60 Vdc is greatly increased. The voltage could cause personal injury if contacted.**

2. Remove the A2A4 20/30 Phase Detector Assembly.
3. Unsolder the input end (top) of A2A4R28 (refer to the component location diagram in chapter 8).
4. Install the circuit board on the extender board.
5. Connect the equipment as shown in figure 5-9. The leads from the 3 dB attenuator should be as short as possible. Connect the ground wire to the negative side of A2A4C4.



www.valuetronics.com

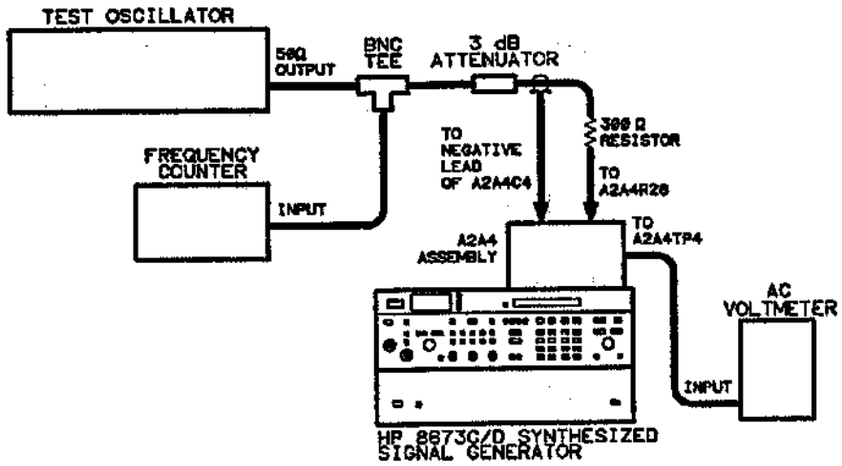


**Figure 5-9. LFS Loop Notch Filter Adjustment Test Setup**

6. Set the Signal Generator's LINE switch to ON.
7. Set the test oscillator's controls for 1 kHz and an AC voltmeter indication of +10 dBm.
8. Set the test oscillator as close to 7985 Hz as possible.
9. Adjust A2A4L3 and L4 to minimize the meter reading. The indication must be less than −50 dBm.
10. Detune the test oscillator away from 7985 Hz while monitoring the AC voltmeter reading. As the oscillator is detuned, the meter indication should increase.
11. Set the Signal Generator's LINE switch to STBY. Resolder A2A4R28 and reinstall the A2A4 assembly.



www.valuetronics.com

## 5-15. YTO Pretune DAC Converter Adjustment (A)

**Note** This procedure applies only to instruments with serial number prefixes 2747A and below where the A3A5 DAC Assembly is 08673-60015. In instruments with other serial number prefixes or where the A3A5 DAC Assembly has been replaced by 08673-60229, use the procedure that follows this one.

**Reference** Service Sheet 9

**Description** This adjustment sets the analog voltages with respect to the digital frequency tuning data. Adjustments are made at selected frequencies. Some of these frequencies are below the low frequency limit of YIG Tuned Oscillator (2 GHz). These frequencies are selected by shorting test point pair A2A9TP1 and tuning to the specified frequencies.

**Equipment** Digital Voltmeter (DVM) ..... HP 3456A or HP 3455A

**Procedure**

1. Key in [RCL] and [0] on the Signal Generator and set the frequency to 4800.000 MHz.
2. Connect the DVM ground lead to the reference ground, A3A6TP5. (The ground lead remains connected here for the remainder of this procedure.)
3. Attach the DVM test lead to A3A5TP4. Set REF ADJ (Reference Buffer output) A3A5R13 for a DVM reading of −6.50 ±0.04 Vdc.
4. Check the output voltages of the Reference Buffers at A3A5TP1 (+10.75 ±0.25 Vdc) and A3A5TP2 (+10.00 ±0.15 Vdc). Make repairs if necessary.
5. Connect the DVM to the YTO Pretune Output, A3A5TP3.
6. Short test point pair A2A9TP1 with an alligator clip.
7. Adjust 1.6 GHz A3A5R4 (not 1.61) to obtain a DVM reading of −4.80 ±0.01 Vdc.
8. Remove the clip from test point pair A2A9TP1.
9. Adjust 4.8 GHz A3A5R3 to obtain a reading of −14.400 ±0.001 Vdc.
10. Tune to 4900.000 MHz and short the test point pair A2A9TP1.
11. Adjust 1.7 GHz A3A5R29 to obtain −5.100 ±0.001 Vdc.
12. Tune to 4800.000 MHz and repeat steps 7 through 11 until step 7 is within 0.01 Vdc and steps 9 through 11 are within 0.001 Vdc of the specified value.



www.valuetronics.com

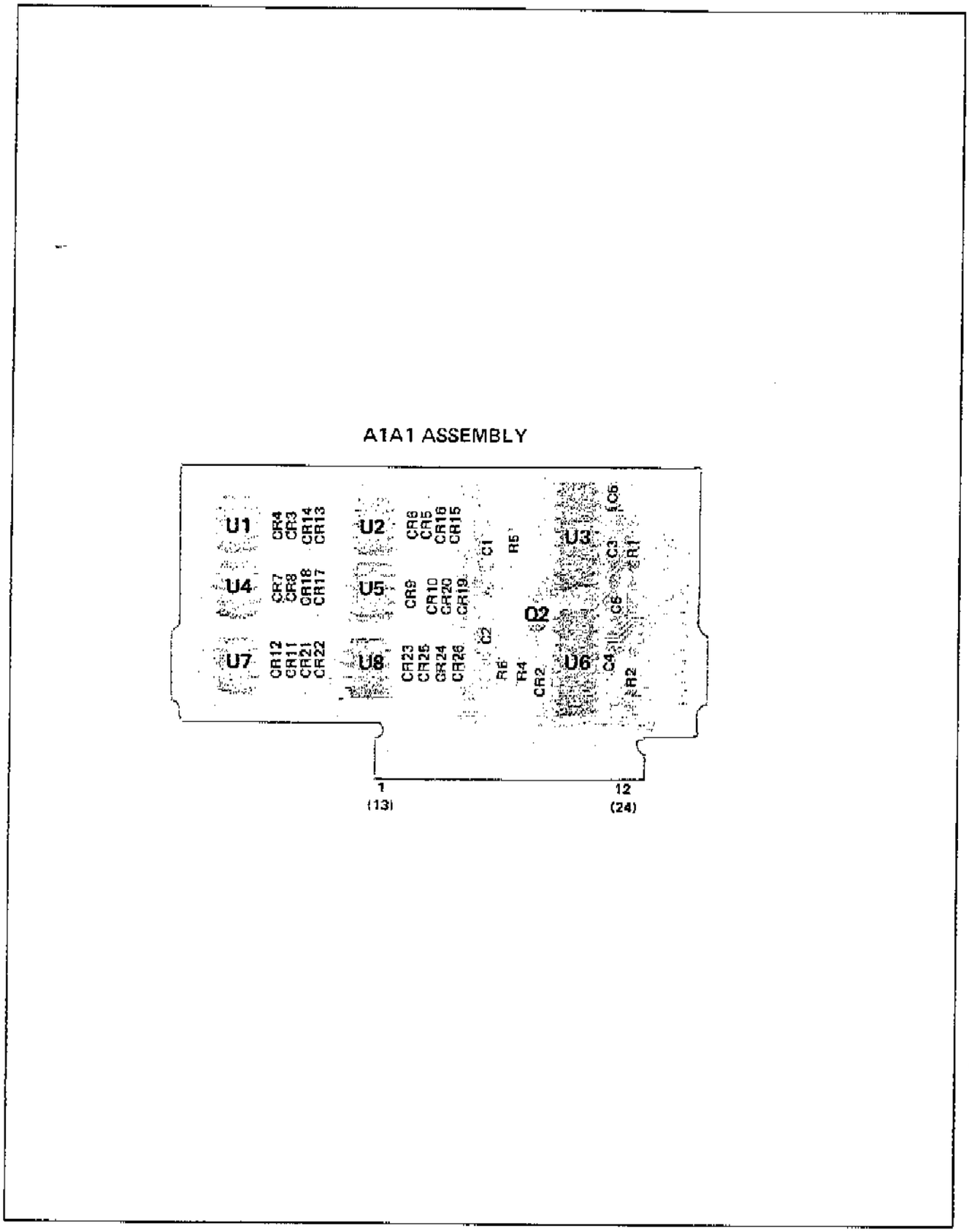


Figure 8-240. A1A1 Attenuator Driver Board Assembly Component and Test Point Location



www.valuetronics.com

## 5-16. YTO Pretune DAC Adjustment (B)

**Note** This procedure applies only to instruments with serial number prefixes 2822A and above, or where the A3A5 DAC Assembly is 08673-60229. In instruments with other serial number prefixes or where the A3A5 DAC Assembly has been replaced by 08673-60015, use the procedure that precedes this one.

**Reference** Service Sheet 9

**Description** This adjustment sets the analog output voltage with respect to the digital frequency tuning data.

**Equipment** Digital Voltmeter (DVM) ..... HP 3456A or HP 3455A

**Procedure**

1. Key in [RCL] and [0] on the Signal Generator and set the frequency to 6598.000 MHz.
2. Connect the DVM ground lead to the reference ground, A3A6TP5. (The ground lead remains connected here for the rest of the procedure).
3. Check the voltage of the Reference Voltage Buffer at A3A5TP4. Verify that the voltage is −6.300 ±0.063 Vdc. Make repairs if necessary.
4. Connect the DVM to the YTO Pretune Output, A3A5TP5.
5. Connect test points A3A5TP1 and A3A5TP2 together with an alligator clip.
6. Adjust A3A5R15 (OFFSET) to obtain a DVM reading of +6.00 mV ±0.02 mVdc.
7. Remove the alligator clip from testpoints A3A5TP1 and A3A5TP2.
8. Adjust A3A5R8 (GAIN) to obtain a voltage of −19.794 ±0.001 Vdc.
9. Tune the Signal Generator to 3066.000 MHz. Verify that the voltage at A3A5TP5 is −9.198 ±0.003 Vdc.
10. Tune the Signal Generator to 4049.000 MHz. Verify that the voltage at A3A5TP5 is −12.147 ±0.03 Vdc.
11. Disconnect the DVM from the Signal Generator.



www.valuetronics.com

## 5-17. YTO Driver Adjustment

**Reference** Service Sheet 10

**Description** The Signal Generator is set to the maximum and minimum frequencies in Band 1 and the YTO driver's gain and offset currents are set to give specified YTO output frequencies.

**Equipment** Frequency Counter ..... HP 5343A

**Note** All boards must be installed in the instrument before these adjustments are made.

**Procedure**

1. On the Signal Generator, press [RCL] and [0] and set the output level to 0 dBm.
2. Connect the frequency counter to the Signal Generator's RF OUTPUT connector.
3. Connect A3A6TP5 (GND) to A3A7TP2 (TUN VOLT) with a clip-on jumper wire. (This grounds the feedback voltage and opens the YTO phase lock loop.)
4. Tune the Signal Generator to 2000.000 MHz. Adjust A3A6R34, 2 GHz, to obtain 2000.0 ±0.1 MHz on the frequency counter. Wait until the drift is minimal (approximately 30 seconds) before making this adjustment.
5. Tune the Signal Generator to 6599.000 MHz. Adjust A3A6R25, which is labeled 6.199 GHz, to obtain 6599.0 ±0.1 MHz on the frequency counter. Wait until the drift is minimal (approximately 30 seconds) before making this adjustment.
6. Repeat steps 4 and 5 until the required tolerance is obtained at both frequencies.
7. Disconnect A3A6TP5 from A3A7TP2.
8. Verify that the counter reading is within ±1 kHz of the Signal Generator's FREQUENCY MHz display at 2.0 and 6.6 GHz.



www.valuetronics.com

## 5-18. YTO Loop Sampler Adjustments

**Reference**

Service Sheet 11

**Description**

The sampler is driven by a sweep oscillator and the dc output is monitored with an oscilloscope. The sampler driver circuit is adjusted for maximum amplitude and flatness over the range of the M/N loop. The sampler's IF preamplifier is adjusted for correct level and the frequency response is checked.

**Equipment**

| | |
|---|---|
| Oscilloscope | HP 1980B |
| Sweep Oscillator | HP 86222B/8620C |
| Spectrum Analyzer | HP 8566B |
| Frequency Counter | HP 5343A |
| 50Ω Termination | HP 11593A |

**Note**

An HP 8485A Power Sensor can be used in place of the 50Ω termination.

**Procedure**

1. Set the Signal Generator's LINE switch to STBY and disconnect the mains power cable.
2. Place the A3A9 Assembly into the service position. (Refer to Service Sheet B for disassembly procedures.)
3. Remove the right side cover of A3A9.
4. (For *2703A and below*.) Connect a 50Ω termination to the A3A9A1 Directional Coupler output, which normally connects to A1W1.

   (For *2704A and above*.) Connect 50Ω termination to A3A9A8U1J5, the preamplifier output which connects to A1W11.
5. Set the sweep oscillator's controls for a leveled output level of 0 dBm, center frequency range of 187.5 ±1.0 MHz (measured by frequency counter) and a sweep range of 200 MHz ±100 MHz.
6. Connect the equipment as shown in figure 5-10. Connect the Signal Generator's mains power cord and set the LINE switch to ON.



www.valuetronics.com

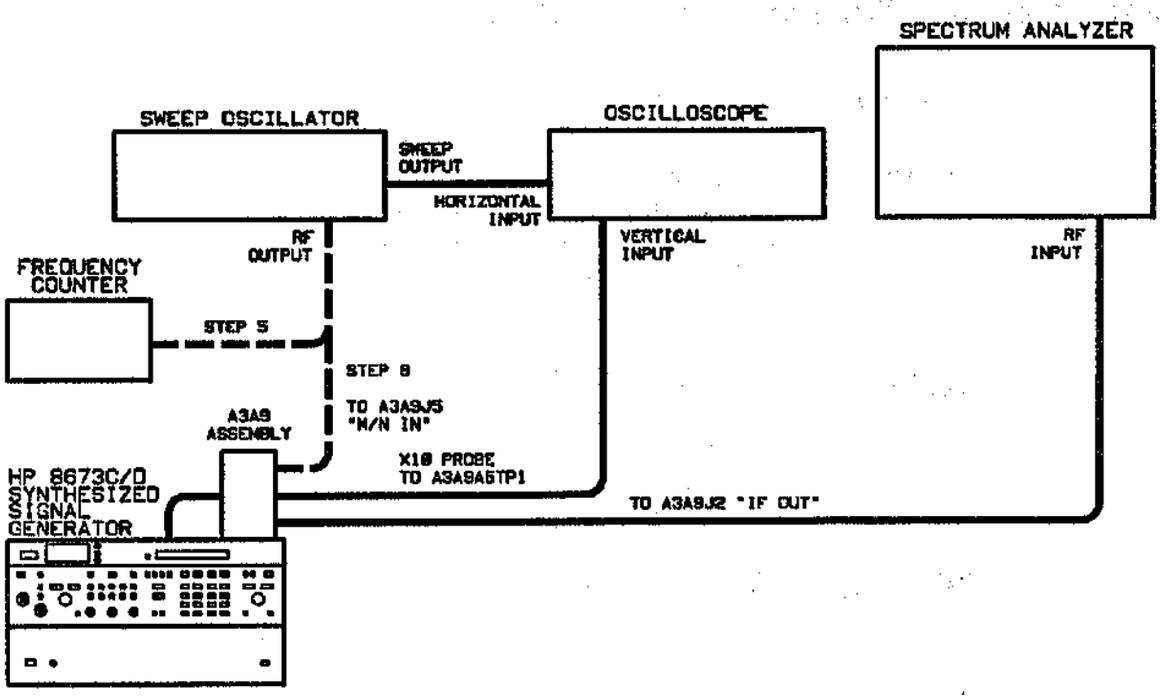


**Figure 5-10. YTO Loop Sampler Adjustment Test Setup**

7. Connect the sweep oscillator's RF output to the M/N LOOP SIGNAL connector, A3A9J5, in place of the white-orange cable.
8. Adjust A3A9A5C1 and C2 (with an insulated adjustment tool) to get an oscilloscope display similar to figure 5-11. Tune for maximum negative voltage and flatness over the center two divisions. The minimum change from the reference level to the maximum negative voltage should be 0.4 volts. (*Troubleshooting Note:* If the minimum change is out of tolerance, A3A9A5Q3 and Q8 may have low gain, the YTO feedback signal feeding the RF port of the mixer may be low, or the sampler may be bad.)



www.valuetronics.com

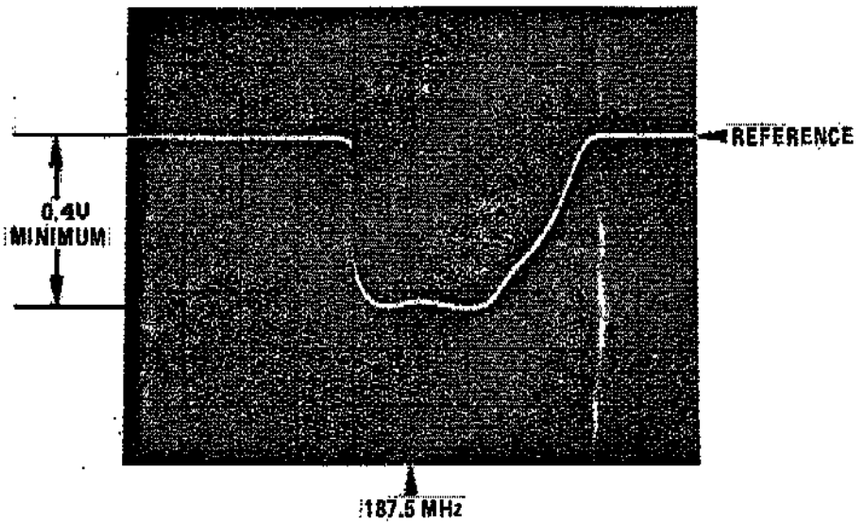


**Figure 5-11. Sampler Frequency Response**

9. Short A3A7TP2 to ground to open the YTO phase lock loop.
10. Tune to 2100 MHz and disconnect the gray cable from the phase detector output, A3A9J6. Remove the oscilloscope's probe from A3A9A5TP1.
11. Connect the spectrum analyzer's input directly to IF OUT, A3A9J2.
12. Set the sweep oscillator's controls for a center frequency of 177.5 ±1.0 MHz and set the sweep width to 10 MHz.
13. Connect the sweep oscillator's output to the M/N LOOP SIGNAL input A3A9J5.
14. Set the spectrum analyzer's controls for a 0 to 100 MHz frequency span. Set the other controls to display the swept IF signal. The fundamental, second and third harmonics should be visible at 30, 60, and 90 MHz. Tune the sweep oscillator slightly to align the signals on the display.
15. (For serial number prefix *2635A and below*, where A3A9A6 is 15 dB.) Adjust the A3A9A5R1, IF GAIN, so that the displayed IF signal at 30 MHz is +2 ±1 dBm. If the level is too low, or if the levels in the following step are not within the levels given, select a new value for C22. Values should be within the range of 120 to 150 pF, and 130 is usually the best value.

    (For serial number prefix *2640A and above*, where A3A9A6 is 18 dB.) Adjust A3A9A5R1, IF Gain, so that the displayed IF signal at 30 MHz is 0 ±1 dBm.

    If the level is too low, or if the levels in the following step are incorrect, select a new value for C22. Values should be within the range of 120 to 150 pF, and 130 is usually the best value.



www.valuetronics.com

16. Slowly tune the sweep oscillator's center frequency from 174 to 181 MHz and observe the fundamental's output level. Verify that the allowable level variation is not exceeded or that the power does not drop below the stated level over the frequency range:

    a. from 6 to 20 MHz, −3 dBm minimum,
    b. from 20 to 30 MHz, +2 to +6 dBm,
    c. from 30 to 70 MHz, −10 dBm minimum.

17. Return the Signal Generator to normal operation as follows:

    a. Disconnect all test equipment.
    b. Reconnect the gray cable to A3A9J6 and the white-orange cable to A3A9J3.
    c. Reverse the instructions in step 4, 3, 2, and 1.

18. Connect the frequency counter to the Signal Generator's RF OUTPUT connector.

19. Verify that the counter reading is within ±1 kHz of the Signal Generator's FREQUENCY MHz display at 2.0 and 6.6 GHz.



www.valuetronics.com

## 5-19. YTO Loop Offset and FM Overmodulation Adjustments

**Reference** Service Sheet 12

**Description** To operate the YTO loop phase detector in the linear region, the loop offset adjustment is set so that the foldover at the peak of the phase detector output signal just begins. To set the FM overmodulation threshold, the FM overmodulation adjustment is set to a position that just lights the front panel FM OVERMOD status annunciator.

**Equipment**

| | |
|---|---|
| Oscilloscope | HP 1980B |
| Spectrum Analyzer | HP 8566B |
| Test Oscillator | HP 3335A |
| Digital Voltmeter (DVM) | HP 3456A |

**Procedure**

1. Set the Signal Generator's LINE switch to STBY and disconnect the mains power cord.
2. Place the A3A9 Assembly into the test position.
3. Remove the A3A9A4 cover.
4. Connect the equipment as shown in figure 5-12. Connect the Signal Generator's mains power cord and set the LINE switch to ON.

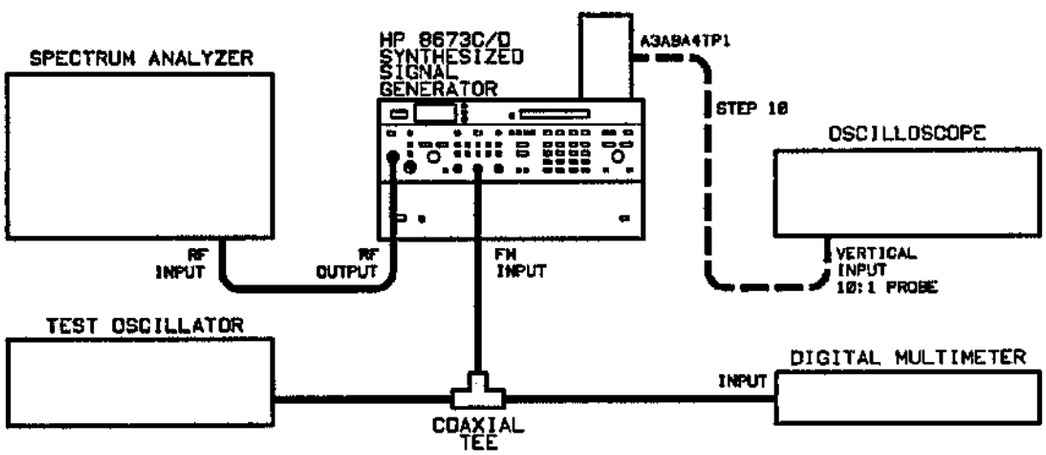


**Figure 5-12. YTO Loop Offset and FM Overmodulation Adjustment Test Setup**

5. On the Signal Generator, key in [RCL] and [0] and then set FM DEVIATION to 10 MHz.
6. Tune the test oscillator to 100 kHz.
7. Adjust the spectrum analyzer's controls to display the carrier and the 100 kHz sidebands.



www.valuetronics.com

8. Adjust the test oscillator's output level for the first carrier null as observed on the spectrum analyzer's display. Record the test oscillator's output level as measured with the voltmeter.

   _____Vrms ($V_1$)

9. Divide the measured value by 2.4. Readjust the test oscillator's output level to the computed level, $V_2$.

   $\frac{V_1}{2.4}$ _____($V_2$)

10. Connect the oscilloscope to A3A9A4TP1 through a divide-by-ten probe. Adjust the oscilloscope's controls to view the 100 kHz signal.

11. Set the YTO loop offset adjustment A3A9A4R53, OFST, so the sinusoidal waveform just begins to fold over. See figure 5-13.

**Note**

There may be two settings of A3A9A4R53 that give the proper offset. Use the position closer to the center of the adjustment range.

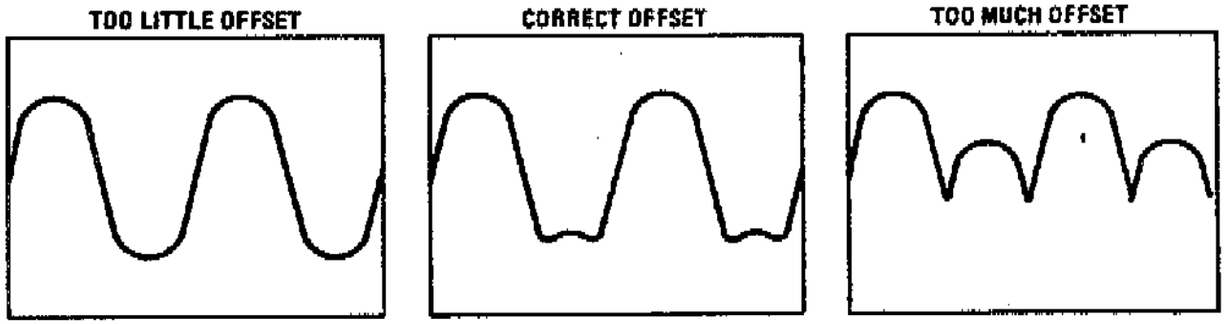


**Figure 5-13. YTO Loop Offset Adjustment Waveforms**

12. Disconnect the oscilloscope's probe.

13. Adjust the test oscillator's output level for the second carrier null as observed on the spectrum analyzer's display. Record the test oscillator's output level.

    _____Vrms ($V_3$)

14. Multiply the measured value by 1.18. Readjust the test oscillator's output level to the computed level, $V_4$.

    $V_3 \times 1.18$ _____($V_4$)

15. Set the FM overmodulation adjustment A3A9A4R30, OMOD, to the full clockwise position. Slowly rotate the adjustment counterclockwise until the front panel FM OVERMOD status annunciator just turns on.

16. Return the Signal Generator to normal operation by reversing the instructions in steps 4, 3, 2, and 1.



www.valuetronics.com

## 5-20. YTO Loop Phase Detector Adjustments

**Reference** Service Sheet 12

**Description** The gain crossover frequency of the YTO phase lock loop is measured and adjusted using a low frequency spectrum analyzer and tracking generator.

**Equipment**

| | |
|---|---|
| Spectrum Analyzer (with tracking generator) | HP 8556A/8552B/141T |
| AC Current Probe | HP 1110B |
| Special Interconnect Cable | (See figure 1-2) |

**Procedure**

1. Set the Signal Generator's RF switch to ON.
2. Connect the equipment as shown in figure 5-14. The special interconnect cable is inserted between A3W16 (gray cable) and A3A9J6 (YTO TUNE 1).

**Note**

When clipping the current probe around the special cable's center conductor, do not allow the metal surface to come in contact with the center conductor connection of the SMA connectors.

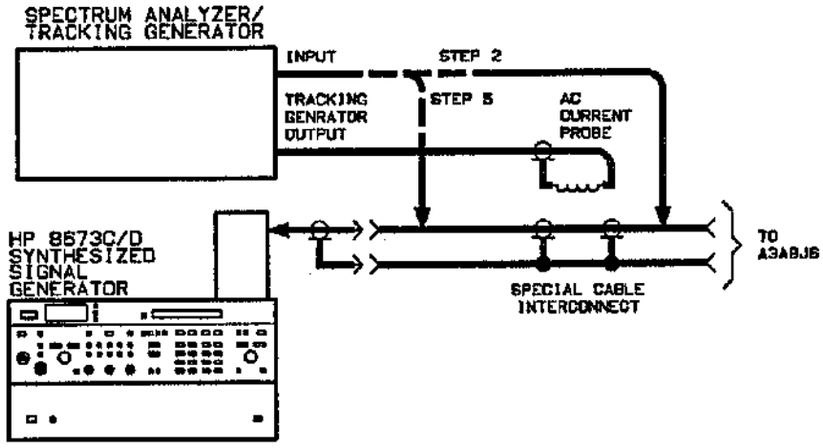


**Figure 5-14. YTO Loop Phase Detector Adjustment Test Setup**

3. Set the spectrum analyzer to scan from 0 to 50 kHz, vertical sensitivity per division to 2 dB, scan mode to single, and set the display's variable persistence to maximum.
4. Press the single sweep key on the spectrum analyzer.
5. Move the spectrum analyzer's input to the cable side (A3W16) of the special cable.



www.valuetronics.com

6. Press the single sweep key. Check that the gain-crossover frequency is 20 ±2 kHz. If the gain-crossover frequency is not correct, A3A9A4R20 must be changed to set the correct frequency; otherwise, this adjustment is complete. See figure 5-15.

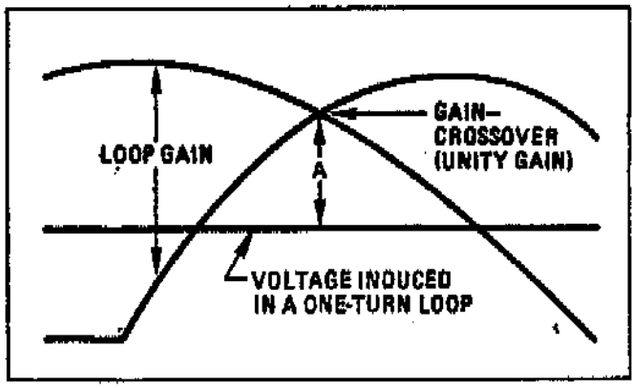


**Figure 5-15.**
**Spectrum Analyzer Display of Phase Locked Loop Gain**

7. If A3A9A4R20 must be changed, perform the following steps:
   a. Set the LINE switch to STANDBY.
   b. Disconnect the mains power cord.
   c. Place the A3A9 Assembly in the test position. (Refer to chapter 8, disassembly procedures.)
   d. Remove the A3A9A4 cover.
   e. Select the value of R20 using the following formula:

$$R2 = R1\left(\frac{F1}{20\ kHz}\right)$$

where

R2 = required value for R20
R1 = present value of R20
F1 = measured frequency

for example, if R1 = 619Ω and F1 = 25 kHz then

$$R2 = 619\left(\frac{25\ kHz}{20\ kHz}\right)$$

R2 = 773Ω or 750Ω (closest value)

8. Install R20, reconnect the mains power cord and set the LINE switch to ON. Recheck the gain-crossover frequency.



www.valuetronics.com

**Note**

The other loop parameters, phase margin and loop gain, may be checked if the loop does not operate correctly. Loop gain is checked at 1 kHz and should be approximately 40 dB. Phase margin is checked by disconnecting the input to the ac probe, shorting the input, and pressing the SINGLE [•] sweep key. Phase margin should be approximately 45° and is calculated by the following expression:

$$\theta = \cos^{-1}\left(1 - \frac{10^{\left(\frac{A}{10}\right)}}{2}\right)$$

where $\theta$ = phase margin and A = ratio (in dB) of the induced voltage to the gain-crossover. (Gain-crossover is the reference, therefore the ratio is negative.)

9. Return the Signal Generator to normal operation as follows:
   a. Set the LINE switch to STBY.
   b. Disconnect the mains power cord.
   c. Install the A3A9A4 cover.
   d. Return the A3A9 Assembly to its normal position.
   e. Install the top and bottom covers.



www.valuetronics.com

## 5-21. FM Driver Adjustments

**Reference** Service Sheet 13

**Description** The dc offset of the FM integrator amplifier is set as close to zero volts as possible. Any FM signal present on the error signal line of the YTO phase lock loop is nulled at both high and low FM driver sensitivities.

**Equipment**

| | |
|---|---|
| Oscilloscope | HP 1980B |
| Test Oscillator | HP 3335A |

**Procedure**

1. Set FM DEVIATION to 0.1 MHz.
2. Connect the oscilloscope to A3A7TP3.

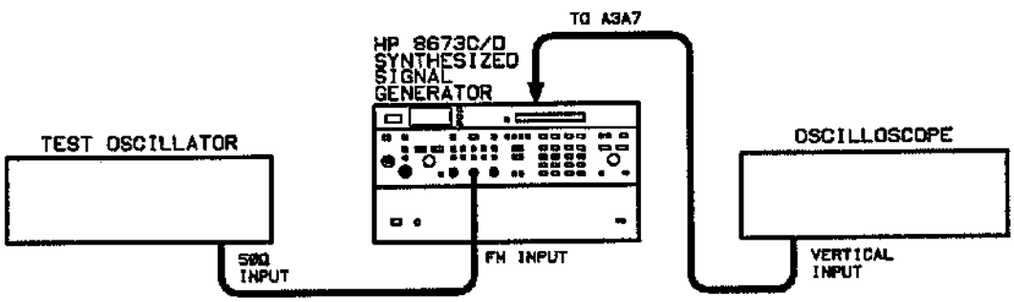


**Figure 5-16. FM Driver Adjustment Test Setup**

3. Set A3A7R28, OFST (offset adjust), for 0.0 ±0.1 Vdc.
4. Set FM DEVIATION to 10 MHz.
5. Verify a voltage level of 0 ±2 Vdc at A3A7TP3.
6. If the RF switch is off, set it to ON.
7. Set the test oscillator controls for an output of 1.5 mVrms at 5 kHz.
8. Connect the oscilloscope to A3A7TP2; connect the test oscillator output to the FM IN connector. The signal displayed by the oscilloscope will generally be less than 20 mV peak-to-peak.
9. Set A3A7R40, GAIN, to null any FM signal present at A3A7TP2.
10. Set FM DEVIATION to 0.1 MHz and test oscillator output level to 0.15 Vrms.
11. Set A3A7R46, −40 GN (−40 Gain), to null any FM signal present at A3A7TP2.



www.valuetronics.com

## 5-22. FM Accuracy and Overmodulation Adjustments

**Reference** Service Sheet 21

**Description** The FM gain is set. The modulation drive is set to a level that causes FM deviation to equal a full scale meter reading. The meter drive adjustment is set accordingly. The modulation drive is then set to a level that causes overmodulation. The FM overmodulation adjustment is set to a position that just lights the front panel FM OVERMOD status annunicator.

**Equipment**

| | |
|---|---|
| Digital Voltmeter | HP 3456A |
| Modulation Analyzer | HP 8902A |
| Test Oscillator | HP 3335A |
| Preamplifier | HP 8477D |
| Mixer | RHG DMS1-26 |
| Local Oscillator | HP 8340A |

**Procedure**

1. Connect the equipment as shown in figure 5-17.

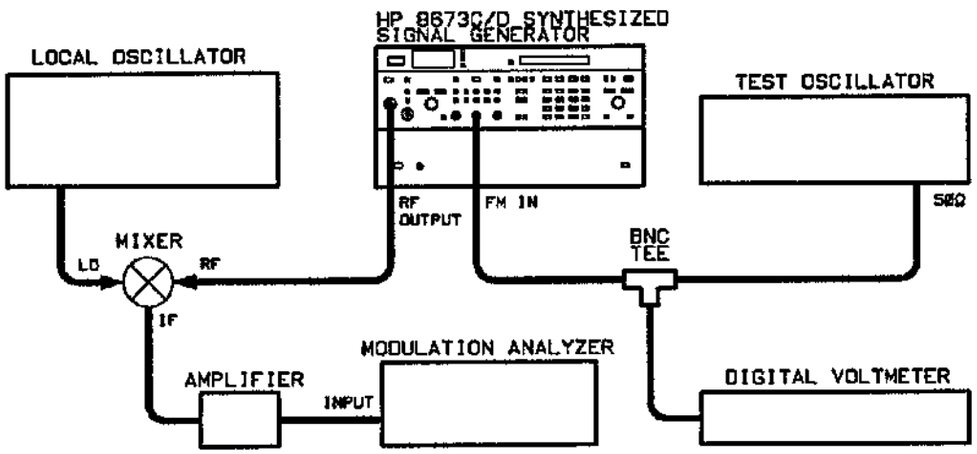


**Figure 5-17. FM Accuracy and Overmodulation Adjustment Test Setup**

2. On the Signal Generator press [RCL] and [0]. Set the instrument to the following conditions:

| | |
|---|---|
| Frequency | 15 GHz |
| Output Level | −20 dBm |
| Meter Scale | FM |
| FM Deviation | 0.1 MHz |

3. Set the local oscillator's frequency to 15.1 GHz at an output level of +7 dBm, with all modulation off.
4. Set the test oscillator's amplitude for a voltmeter reading of 0.7071 Vrms.



www.valuetronics.com

5. Adjust FM GAIN (A1A6R35) on the A1A6 Meter Assembly for a modulation analyzer reading of 100.0 ±0.1 kHz.
6. Adjust FM MTR (A1A6R70) for a full scale reading of 100 kHz on the Signal Generator's front panel meter.
7. Set the Signal Generator to the 0.03 MHz FM deviation range.
8. Verify that the Signal Generator's front panel meter agrees with the modulation analyzer (approximately 30 kHz) to within 4 kHz.
9. Set the test oscillator's amplitude for a voltmeter reading of 0.7425 Vrms.
10. Set FM OMOD (A1A6R54) to the extreme clockwise position.

**Note**

Adjust FM OMOD as accurately as possible to avoid turning on the front panel FM OVERMOD status annunciator erroneously.

11. Adjust FM OMOD (A1A6R54) in a counterclockwise direction until the FM OVERMOD status annunciator on the Signal Generator's front panel just turns on.



www.valuetronics.com

## 5-23. SRD Bias Adjustment—Manual Procedure

**Note**

This procedure applies only to instruments with serial number prefixes 2626A, 2608A, 2540A and below. In other instruments, adjustments have been replaced by data in the SRD Bias Board ROM A1A8U13. Data is unique for each YTM.

This is a manual procedure. An alternate SRD Bias procedure follows this one. It is an automated procedure which should be used if an HP-85 computer and 11726-10004 software are available.

**Reference**

Service Sheet 19

**Description**

The YIG Tuned Multiplier (YTM) multiplies the fundamental frequency of the YIG Tuned Oscillator (2.0 to 6.6 GHz). Multiplication is achieved via the step recovery diode (SRD) inside the YTM. The bias voltages on the SRD control the signal levels of the harmonics generated. Misadjusted bias voltages result in low harmonic levels, and thus low power out in the harmonic frequency bands (6.6—18 GHz for the HP 8673C and 6.6—26 GHz for the HP 8673D). Extreme misadjustment can cause YTM spurious oscillations and poor pulse shape in pulse modulation mode.

The SRD bias adjustment procedure consists of setting both the source and gate bias voltages of the SRD bias FET. There are a maximum of four source voltage adjustments; one for each frequency band. There are a maximum of six gate voltage adjustments; two for each of the harmonic bands. The adjustment is performed as follows:

a. The bias voltages are listed on a label located inside the Signal Generator near the A2A5 assembly on the A2 Controller chassis. Data on the label is similar to that shown in figure 5-18. The label has unique calibration voltages for source and gate bias for the YTM with the indicated serial number. Notice that the calibration label has one source voltage and two gate voltages for each band.

b. Source voltages for each band are adjusted. Band 1 (2.0 to 6.6 GHz) source voltage is always set to 3.80 ±0.01 Vdc. Band 2 (6.6 to 12.3 GHz), band 3 (12.3 to 18.6 GHz), and for the 8673D, band 4 (18.6 to 26.0 GHz) source voltages are set to within ±0.001 Vdc of the voltage listed on the YTM label.

c. Gate bias voltages are adjusted for bands 2, 3, and for the 8673D, band 4. Gate bias voltages are adjusted at the high end and the low end of each band. Voltages are adjusted to be within ±0.005 Vdc of the voltages listed on the YTM label.



www.valuetronics.com

**Equipment** Digital Voltmeter (DVM) ..... HP 3456A or HP 3455A

**Procedure**

1. On the Signal Generator:
   a. Set LINE switch to STBY.
   b. Remove A1 Assembly Cover at the left front of the Signal Generator.
2. Connect digital voltmeter to A1A8TP1 (source).
3. On the Signal Generator:
   a. Set LINE switch to ON.
   b. Press the [6] key and the service switch A2A2S1. This stores the start and stop frequencies of bands 1 through 4 in registers 1 through 4 respectively. The start and stop frequencies are near the low and high ends of each band.
   c. Press [RCL] and [1] keys. This places the Signal Generator in manual sweep mode with the frequency near the low end of band 1.
   d. Adjust A1A8R84 (B1 Source) to −3.80 ±0.01 Vdc.
4. Locate SRD calibration label located directly behind A2A5 20/30 Divider assembly. Sample label is shown. (See figure 5-18.)

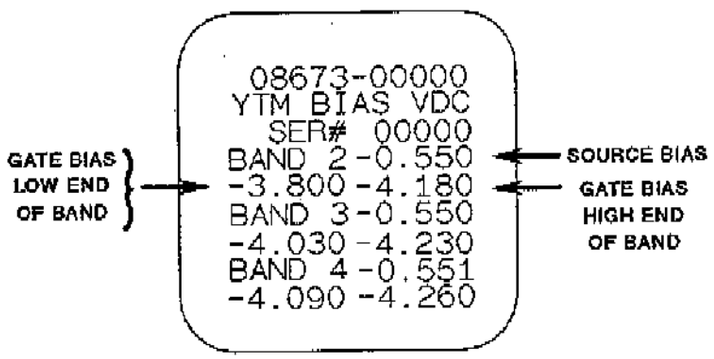


**Figure 5-18. YTM Bias Label**

5. On the Signal Generator:
   a. Press [RCL] and [2] keys.
   b. Adjust A1A8R85 (B2 Source) equal to Band 2 source voltage on YTM calibration label ±0.001 Vdc.
   c. Press [RCL] and [3] keys.
   d. Adjust A1A8R86 (B3 Source) equal to Band 3 source voltage on YTM calibration label ±0.001 Vdc.
6. Connect digital voltmeter to A1A8TP2.
7. On the Signal Generator:



www.valuetronics.com

a. Press [RCL] and [2] keys.

b. Tune frequency to 12299.902 MHz (near the high end of Band 1).

c. Adjust A1A8R31 (B2 HI) equal to Band 2 HI gate voltage ±0.005 Vdc, located on right side of YTM calibration label.

d. Tune frequency to 6600.002 MHz (near the low end of Band 2).

e. Adjust A1A8R61 (B2 LO) equal to Band 2 LO gate voltage ±0.005 Vdc, located on left side of YTM calibration label.

8. Repeat adjustments in step 7 until voltages are within ±0.005 Vdc.

9. On the Signal Generator:

a. Press [RCL] and [3] keys.

b. Tune frequency to 18599.901 MHz.

c. Adjust A1A8R32 (B3 HI) equal to Band 3 HI gate voltage ±0.005 Vdc, located on right side of YTM calibration label.

d. Tune frequency to 12300.003 MHz.

e. Adjust A1A8R62 (B3 LO) equal to Band 3 LO gate voltage ±0.005 Vdc, located on left side of YTM calibration label.

10. Repeat adjustments in step 9 until voltages are within ±0.005 Vdc.

11. For HP 8673D only, on the Signal Generator:

a. Press [RCL] and [4] keys.

b. Tune frequency to 25999.904 MHz.

c. Adjust A1A8R33 (B4 HI) equal to Band 4 HI gate voltage ±0.005 Vdc, located on right side of YTM calibration label.

d. Tune frequency to 18600.004 MHz.

e. Adjust A1A8R63 (B4 LO) equal to Band 3 LO gate voltage ±0.005 Vdc, located on left side of YTM calibration label.

12. Repeat adjustments in step 11 until voltages are within ±0.005 Vdc.



www.valuetronics.com

## 5-24. SRD Bias Adjustment—Automated Procedure

**Note**

This procedure applies only to instruments with serial number prefixes 2626A, 2608A, 2540A and below. In other instruments, adjustments have been replaced by data in the SRD Bias Board ROM A1A8U13. Data is unique for each YTM.

This is an automated procedure. An alternate SRD Bias procedure precedes this one. It is a manual procedure which should be used if an HP-85 computer and 11726-10004 software are not available.

**Reference**

Service Sheet 19

**Description**

**Automated Adjustment.** The YIG Tuned Multiplier (YTM) multiplies the fundamental frequency of the YIG Tuned Oscillator (2.0 to 6.6 GHz). Multiplication is achieved via the step recovery diode (SRD) inside the YTM. The bias voltages on the SRD control the signal levels of the harmonics generated. Misadjusted bias voltages result in low harmonic levels, and thus low power out in the harmonic frequency bands (6.6—18 GHz for the HP 8673C and 6.6—26 GHz for the HP 8673D). Extreme misadjustment can cause YTM spurious oscillations and poor pulse shape in pulse modulation mode.

The SRD bias adjustment procedure consists of setting both the source and gate bias voltages of the SRD bias FET. There are a maximum of four source voltage adjustments; one for each frequency band. There are a maximum of six gate voltage adjustments; two for each of the harmonic bands. The adjustment is performed as follows:

a. Source and gate dc bias voltage values are entered into the controller as shown in figure 5-19. The bias voltages are listed on the YTM label located inside the Signal Generator near the A2A5 assembly on the A2 Controller chassis. The question mark (?) is used as a prompt to indicate when and where data should be entered.

b. Source voltages for each band are adjusted. Band 1 (2.0 to 6.6 GHz) source voltage is always set to 3.80 ±0.01 Vdc. Band 2 (6.6 to 12.3 GHz), band 3 (12.3 to 18.6 GHz), and for the HP 8673D, band 4 (18.6 to 26.0 GHz) source voltages are set to within ±0.001 Vdc of the voltage listed on the YTM label. After the source voltages are adjusted, the results are printed.



www.valuetronics.com

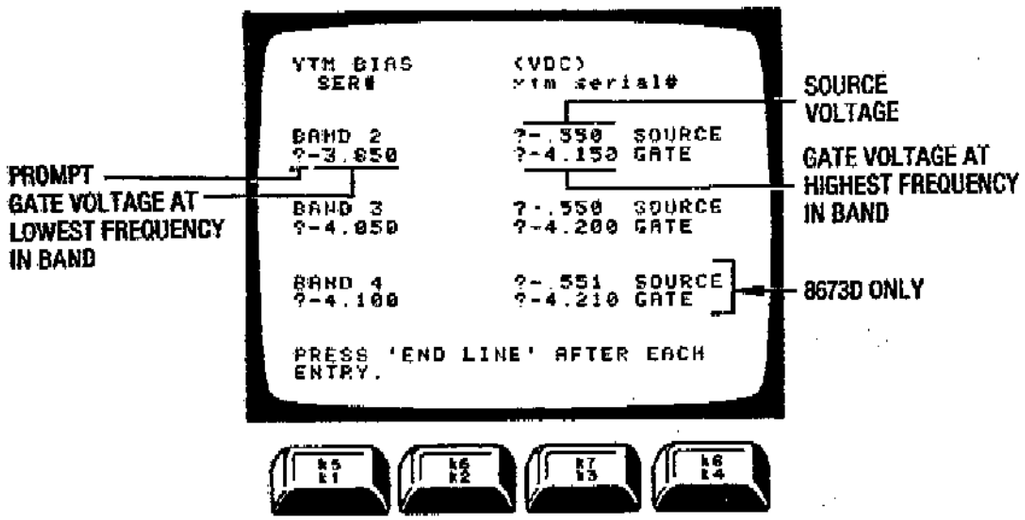


**Figure 5-19. Format for Entering SRD Bias Voltages for HP 8673C/D**

c. Gate bias voltages are adjusted for bands 2, 3, and for the HP 8673D, band 4. A maximum of six rectangles are drawn on the controller screen, each one representing an adjustment. The center of the rectangle represents the entered gate voltage. The flashing "X", which represents the error from the entered gate voltage, is adjusted to within one-half division of the rectangle center. See figure 5-20.

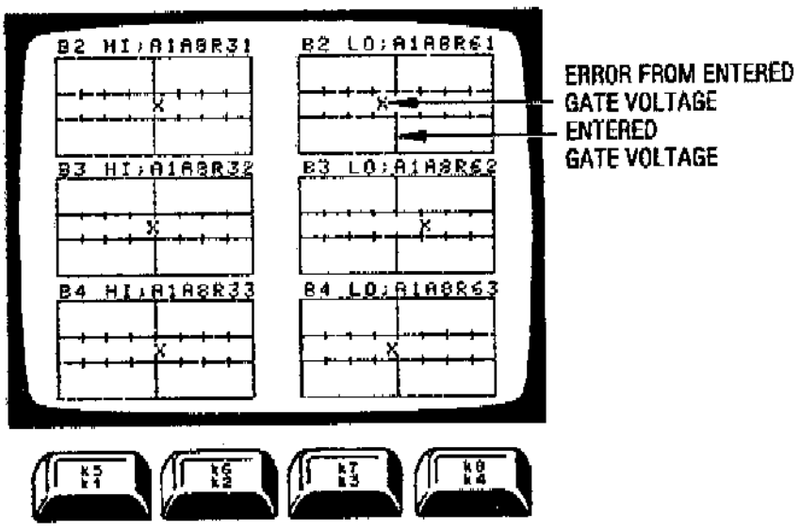


**Figure 5-20. Gate Voltage Adjustment for HP 8673C/D**

After the gate voltages are adjusted, the results are printed.



www.valuetronics.com

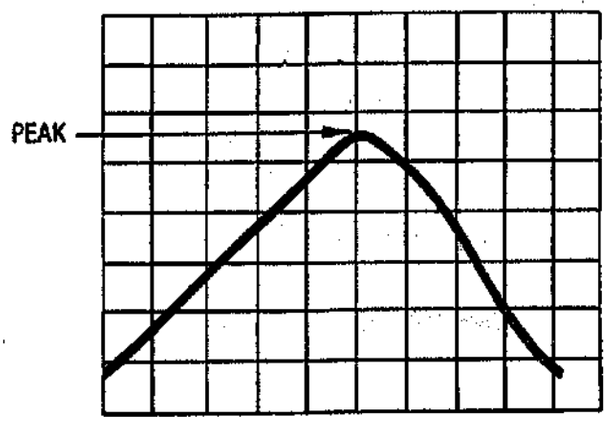


Figure 5-23. Optimum YTM Response

d. Each band is swept to check the YTM tracking response of its passband after adjustment.

**Equipment**

| | |
|---|---|
| Digital Voltmeter (DVM) | HP 3456A |
| Oscilloscope | HP 1980B |
| 50Ω Termination | HP 11593A |
| HP-IB Controller with Optional ROM | HP 85B/00085-15002/ 00085-15004/00085-15005 |
| Test Cassette | HP 11726-10004 |

**Procedure**

1. Connect equipment as shown in figure 5-24.

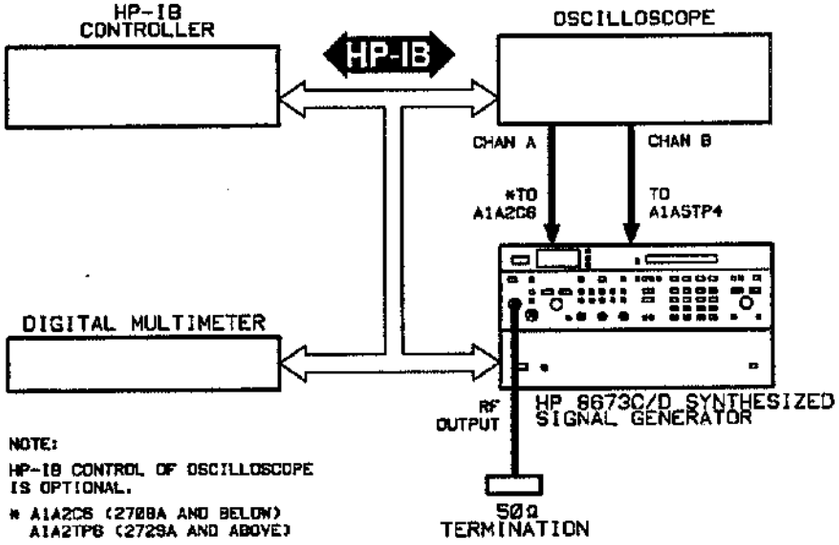


Figure 5-24. YTM Tune Adjustment Test Setup



www.valuetronics.com

## 5-25. YTM Tune—Manual Procedure

**Note** This is a manual procedure. An alternate YTM Tune procedure follows this one. It is an automated procedure which should be used if an HP-85 computer and 11726-10004 software are available.

**Reference** Service Sheets 14, 16, 17, 20, and 22

**Description** The YIG-Tuned Multiplier (YTM) is swept approximately 200 MHz above and below the Signal Generator's set RF output frequency. The YTM pass band is adjusted so that its center frequency tracks the desired YTM output frequency over its entire range.

**Note** YTM adjustments are performed in the BYPASS mode, clamp off, and for the HP 8673D, the K-Band amp switch out.

If the YTM tuning is out of adjustment, the bandpass filter either attenuates the YIG Tuned Oscillator (YTO) signal more than normal, resulting in low output power, or insufficiently filters signal harmonics. The YTM tune adjustment should be performed whenever the YTM or associated circuitry has been repaired or whenever low output power or high harmonics exist.

The YTM tune adjustment is performed as follows:

a. Preliminary adjustments are made. These include setting the +12.4 voltage reference, setting the peaker DAC input bits low, adjusting "INT OS", disabling the power clamp circuit, and setting the front panel CAL control.

b. The oscilloscope display is calibrated to monitor the detected output of the YTM.

c. YTM tuning is adjusted by centering the YTM response peak on the oscilloscope display (see figure 5-22). Adjustments are made at the highest and lowest frequency in each band. In addition, band 3 and 4 are adjusted at "breakpoints" to correct for tracking deviation at the higher frequencies.

d. Each band is swept to check the YTM tracking response of its passband after adjustment.



www.valuetronics.com

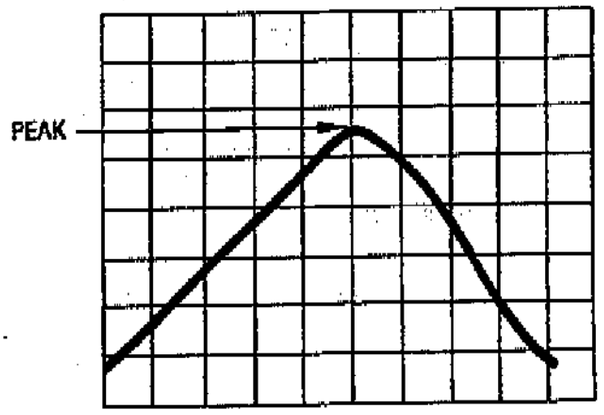


**Figure 5-22. Optimum YTM Response**

## Equipment

| | |
|---|---|
| Digital Voltmeter (DVM) | HP 3456A or HP 3455A |
| Oscilloscope | HP 1980B/19860A |
| 50Ω Termination | HP 11593A |
| MPU Test Board (p/n 11726-60001) P/O Support Kit | HP 11726A |

## Procedure

1. On the Signal Generator:
   a. Set LINE switch to STBY.
   b. Remove A1 access cover in the left front of the Signal Generator.
   c. Set LINE switch to ON.
   d. Set the NORMAL/BYPASS switch to BYPASS.
2. Connect digital voltmeter negative to A1A7TP1 and positive to A1A7TP6.
   a. Adjust A1A7R8 for +12.400 ±0.005 Vdc.
3. On oscilloscope:
   a. Connect ground lead to A1A5TP5.
   b. Connect probe to A1A5TP4.
   c. Set vertical sensitivity to 1V/DIV.
   d. Set DC Coupling to ON.
   e. Set horizontal time base to 5 msec/DIV.
4. On the Signal Generator:
   a. Set LINE switch to STBY.
   b. Remove A2 access cover in the right rear of the Signal Generator.
   c. Install MPU Test Connector on top of A2A8 Assembly.
   d. Install jumper between A2A8TP5 and adjacent A2A8TPGND.
   e. Set A2A8S1 to 5.
   f. Set LINE switch to ON.
   g. Verify that FREQUENCY MHz display indicates "05-1".



www.valuetronics.com

h. Disconnect jumper between A2A8TP5 and adjacent A2A8TPGND.
i. Adjust A1A5R60 for an absolute negative peak on sawtooth ramp of −4.30 ±0.1 Vdc, referenced to ground.
j. Set LINE switch to STBY.
k. Remove MPU Test connector on A2A8 Assembly.
l. Set A2A8S1 to 1.

5. Connect digital voltmeter to A1A2C6.

6. On Signal Generator:

a. Set LINE switch to ON.
b. Press [RCL] and [0] keys.
c. Turn RF OUTPUT ON/OFF to OFF.
d. (*2708A and below*): Adjust A1A2A2R12 for −0.920 ±0.1 Vdc.
(*2729A and above*): Adjust A1A2R88 for −0.920 ±0.1 Vdc.

7. Disconnect digital voltmeter.

8. On Signal Generator:

a. Rotate A1A3R51 fully counterclockwise to disable the power clamp circuit.
b. Rotate EXT ALC IN CAL adjustment (front panel) fully clockwise.

9. On oscilloscope:

a. Using 10:1 probe, connect channel A input to A1A2C6 (*2708A and below*); to A1A2TP6 (*2729A and above*).
b. Using 10:1 probe, connect channel B input to A1A5TP4.
c. Set vertical sensitivity channel A to 0.01 V/DIV.
d. Set horizontal display to X-Y (A vs. B).

10. On the Signal Generator:

a. Press [RCL], [0], and [6] keys.
b. Press service switch A2A2S1.
c. Set output level to −70 dBm.
d. Press Pulse NORM [•] key.
e. Press [3] key.
f. Press service switch A2A2S1.

11. Use oscilloscope channel B VOLTS/DIV CAL control and horizontal position control to adjust for a full 10 division horizontal sweep across display.

**Note**

This sets YIG Tuned Multiplier "auto-peak" sweep sensitivity to approximately 40 MHz/DIV as measured on oscilloscope.

12. On Signal Generator:

a. Press [4] key.
b. Press service switch A2A2S1.



www.valuetronics.com

13. Using Oscilloscope horizontal position control, center dot on oscilloscope display. Do not adjust vertical gain controls to center dot.

**Caution** Be careful not to allow the cable connector to short against any printed wiring board traces.

14. Disconnect A1W7 from A1AT3.

**Note** If amplitude of displayed signal decreases at any time during adjustment, press PULSE OFF, PULSE NORM (•), then (3) keys, then service switch A2A2S1 before proceeding with adjustment.

15. On the Signal Generator:
    a. Press PULSE OFF then PULSE NORM (•) keys.
    b. Press (3) key.
    c. Press service switch A2A2S1.
    d. Tune frequency down to 2000.000 MHz.
    e. Adjust A1A7R69 (B1 LO) to center YIG Tuned Multiplier passband response horizontally on oscilloscope display (see figure 5-22).
    f. Using TUNE KNOB, tune frequency to 6.6 GHz.
    g. Press PULSE OFF then PULSE NORM (•) keys.
    h. Press (3) key.
    i. Press service switch A2A2S1.
    j. Adjust A1A7R14 (B1 HI) to center YIG Tuned Multiplier passband on oscilloscope display.
16. Repeat step 15 until both ends of band are within 1 division of screen center on oscilloscope display.
17. Using TUNE KNOB, tune Signal Generator to scan entire band (from 2.0 to 6.6 GHz) and verify that YIG Tuned Multiplier passband response tracks within 2 divisions of screen center on oscilloscope display.

    If response peak does vary more than 2 divisions, readjust A1A7R14 (B1 HI) and A1A7R69 (B1 LO) for beset compromise.
18. On Signal Generator:
    a. Press (RCL) then (2) keys.
    b. Press PULSE NORM (•) key.
    c. Press (3) key.
    d. Press service switch A2A2S1.
    e. Using TUNE KNOB, tune frequency to 6600.002 MHz.
    f. Adjust A1A7R68 (B2 LO) to center YIG Tuned Multiplier response peak on oscilloscope display.
    g. Using TUNE KNOB, tune frequency to 12299.902 MHz.
    h. Adjust A1A7R17 (B2 HI) to center YIG Tuned Multiplier response peak on oscilloscope display.



www.valuetronics.com

19. Repeat step 18 until both ends of band are within 1 division of screen center on oscilloscope display.

20. Using TUNE KNOB, tune Signal Generator to scan entire band (from 6.6 to 12.3 GHz) and verify that YIG Tuned Multiplier passband response tracks within 2 divisions of screen center on oscilloscope display.

    If response peak does not vary more than 2 divisions, readjust A1A7R17 (B2 HI) and A1A7R68 (B2 LO) for best compromise.

21. On the Signal Generator:

    a. Press [RCL] then [3] keys.
    b. Press PULSE NORM [•] key.
    c. Press [3] key.
    d. Press service switch A2A2S1.
    e. Using TUNE KNOB, tune frequency to 12300.003 MHz.
    f. Adjust A1A7R67 (B3 LO) to center YIG Tuned Multiplier response peak on oscilloscope display.
    g. Using TUNE KNOB, tune frequency to 17024.928 MHz.
    h. Adjust A1A7R18 to center YIG Tuned Multiplier response peak on oscilloscope display.

22. Repeat step 21 until both ends of band are within 1 division of screen center on oscilloscope display.

23. On the Signal Generator:

    a. Using TUNE KNOB, tune frequency to 18599.901 MHz.
    b. Adjust A1A7R51 to center YIG Tuned Multiplier response peak on oscilloscope display.
    c. Using TUNE KNOB, tune Signal Generator to scan entire band (from 12.3 to 18.6 GHz) and verify that YIG Tuned Multiplier passband response tracks within 2 divisions of screen center on oscilloscope display.

       If response peak does vary more than 2 divisions, readjust A1A7R67 (B3 LO), A1A7R18, and A1A7R51 for best compromise.

24. *For HP 8673D Only.* On the Signal Generator:

    a. Press [RCL], [4] keys.
    b. Press [9] key, then press service switch A2A2S1 to disable the K-Band amp.
    c. Press Pulse NORM [•] key.
    d. Press [3] key.
    e. Press service switch A2A2S1.
    f. Using TUNE KNOB, tune frequency to 18600.004 MHz.
    g. Adjust A1A7R66 (B4 LO) to center YIG Tuned Multiplier response peak on oscilloscope display.
    h. Using TUNE KNOB, tune frequency to 25037.916 MHz.
    i. Adjust A1A7R54 to center YIG Tuned Multiplier response peak on oscilloscope display.
    j. Using TUNE KNOB, tune frequency to 25999.904 MHz.



www.valuetronics.com

k. Adjust A1A7R55 to center YIG Tuned Multiplier response peak on oscilloscope display.

25. Using TUNE KNOB, tune Signal Generator to scan entire band (from 18.6 to 26 GHz) and verify that YIG Tuned Multiplier passband response tracks within 2 divisions of screen center on oscilloscope display.

    If response peak does vary more than 2 divisions, readjust A1A7R66 (B4 LO), A1A7R54, and A1A7R51 for best compromise.

26. Reconnect A1W7 to A1AT3.

27. Press [8] key, then press service switch A2A2S1 to enable the K-Band amp.

**Note**

Perform the procedure titled "Clamp Adjustment" after completing this adjustment.



www.valuetronics.com

## 5-26. YTM Tune—Automated Procedure

**Note** This is an automated procedure. An alternate YTM Tune procedure precedes this one. It is a manual procedure which should be used if an HP-85 computer and 11726-10004 software are not available.

**Reference** Service Sheets 14, 16, 17, 20, and 22

**Description** **Automated Adjustment.** The YIG Tuned Multiplier (YTM) is swept approximately 200 MHz above and below the Signal Generator's set RF output frequency. The YTM passband is then checked. If out of spec, it is adjusted so that its center frequency tracks the desired YTM output frequency over its entire range (2—18.6 GHz for HP 8673C and 2—26 GHz for HP 8673D).

**Note** The YTM adjustments are performed in the BYPASS mode, clamp off, and for the HP 8673D, the K-Band amp switched out.

If the YTM tuning is out of adjustment, the bandpass filter either attenuates the YIG Tuned Oscillator (YTO) signal more than normal, resulting in low output power, or insufficiently filters signal harmonics. The YTM Tune adjustment should be performed whenever the YTM or associated circuitry has been repaired or whenever low output power or high harmonics exist.

The YTM tune adjustment is performed as follows:

a. Preliminary adjustments are made. These include setting the +12.4 voltage reference, setting the peaker DAC input bits low via the Special Function learn mode, adjusting "INT OS", disabling the power clamp circuit, and setting the front panel CAL control.

b. The oscilloscope display is calibrated to monitor the detected output of the YTM.

c. YTM tuning is adjusted by centering the YTM response peak on the oscilloscope display (see figure 5-23). Adjustments are made at the highest and lowest frequency in each band. In addition, band 3 and, for the HP 8673D, band 4 are adjusted at "breakpoints" to correct for tracking deviation at the higher frequencies.



www.valuetronics.com

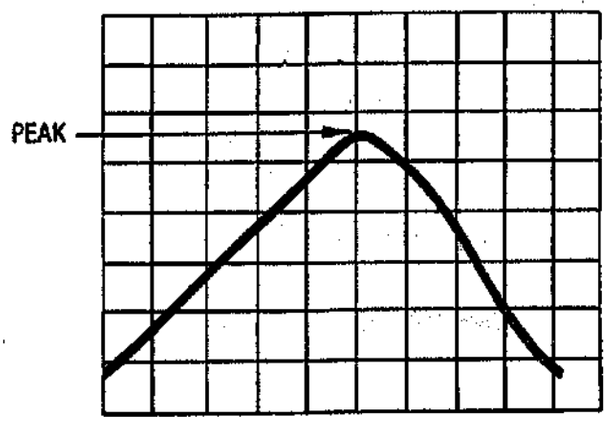


Figure 5-23. Optimum YTM Response

d. Each band is swept to check the YTM tracking response of its passband after adjustment.

**Equipment**

| | |
|---|---|
| Digital Voltmeter (DVM) | HP 3456A |
| Oscilloscope | HP 1980B |
| 50Ω Termination | HP 11593A |
| HP-IB Controller with Optional ROM | HP 85B/00085-15002/ 00085-15004/00085-15005 |
| Test Cassette | HP 11726-10004 |

**Procedure**

1. Connect equipment as shown in figure 5-24.

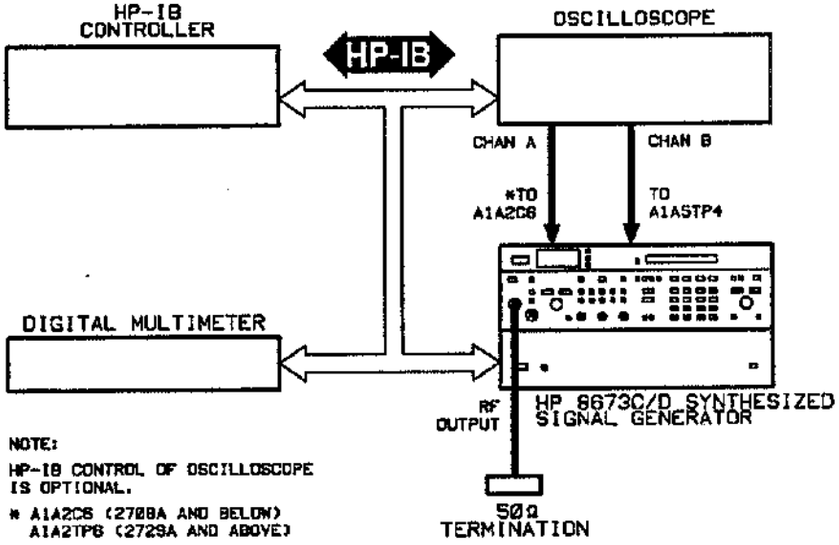


Figure 5-24. YTM Tune Adjustment Test Setup



www.valuetronics.com

2. Ensure that the Signal Generator's HP-IB address is set to 19, that the voltmeter's HP-IB address is set to 22, and the oscilloscope's address is set to 07.

**Note**

The use of a remotely controlled oscilloscope is optional.The test will run with either a manual oscilloscope or a remotely controlled HP 1980B.

3. The YTM adjustment program can be loaded by either of two methods: a) by using the "SRD" adjustment program "Load next test" function or b) by loading and running the "EXEC" program to display the Main Menu, figure 5-2.
4. After the "EXEC" program is loaded and the Main Menu is displayed, press [k2] to run the "YTM" tune adjustment program.
5. Instructions for the remainder of the procedure will be displayed on the controller screen. The program will indicate when the YTM tune adjustment has been completed.

   For serial number prefixes 2729A and above, the A1A2 Detector Module Assembly is different. Use Test point A1A2TP6 instead of A1A2C6, and adjust pot A1A2R88 instead of A1A2A2R12.

**Note**

Perform the procedure titled "Clamp Adjustment" after completing this adjustment.



www.valuetronics.com

## 5-27. Clamp Adjustment

**Reference** Service Sheet 20

**Description** The power clamp circuit is used to limit power in band 1 (2.0 to 6.6 GHz) below the level where YIG tuned multiplier (YTM) spurious oscillations (squegging) occur. Spurious oscillations vary with each YTM and with frequency, but generally occur at high power levels (>12 dBm) and at frequencies within band 1. The power clamp operates in external ALC mode only. The clamp level is adjusted to prevent spurious oscillations and the YTM is then checked for absence of squegging.

**Equipment**

| | |
|---|---|
| Power Meter | HP 436A |
| Power Sensor | HP 8485A |

**Procedure**

1. Calibrate the power meter to the power sensor.
2. Connect the equipment as shown in figure 5-25.

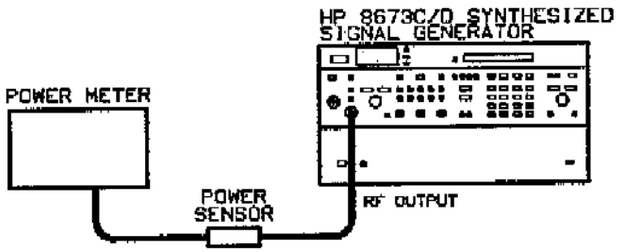


**Figure 5-25. Power Clamp Adjustment Test Setup**

3. Set CLAMP (A1A3R51) on the Function Assembly fully clockwise for maximum power output.
4. On the Signal Generator, press [RCL] [0]; set frequency to 6 GHz, RANGE to 0 dBm, and ALC DIODE to on.
5. Set the CAL control on the Signal Generator's front panel fully clockwise.
6. Set the power meter's cal factor for 6 GHz correction.
7. Adjust CLAMP counterclockwise until the power meter reads +11.0 ±0.2 dBm.
8. Set the Signal Generator's frequency increment to 50 MHz. Then, press the FREQ INCREMENT [⇩] key to tune down in frequency across band 1 while observing the power meter reading. If the power changes suddenly by several dB while changing frequency, the Signal Generator has entered the spurious oscillation (squegging) mode. Decrease the clamp level in 0.5 dB increments at 6 GHz, each time setting the RF key to OFF



www.valuetronics.com

momentarily and starting the CLAMP adjustment from its fully clockwise position. Repeat this step until no squegging exists.

**Note**

It should not be necessary to set the clamp level lower then +10 dBm.

9. Record this level below for use as a reference. _____dBm



www.valuetronics.com

## 5-25. YIG Tuned Filter Adjustment

**Reference** Service Sheets 38 and 44

**Description** The YIG Tuned Filter (YTF) response is swept using an internal service function, and displayed on an oscilloscope. The YTF passband is adjusted to track the output frequency of the YIG Tuned Multiplier (YTM) and reduces unwanted harmonics at the RF output.

The YTF passes frequencies in the 6—22 GHz range and is switched into the signal path by the microprocessor controller. Passive filters, also switched, are used to filter harmonics outside this range.

**Equipment**

| | |
|---|---|
| Power Meter | HP 436A |
| Power Sensor | HP 8485A |
| Digital Voltmeter (DVM) | HP 3456A or HP 3455A |
| Oscilloscope | HP 1980B/HP 19860A |

**Procedure**

1. Connect equipment as shown in figure 5-26. Remove top and bottom covers of the Signal Generator and put the Card Cage and A5A9 assembly in the service position. (Refer to chapter 8, disassembly procedures.)

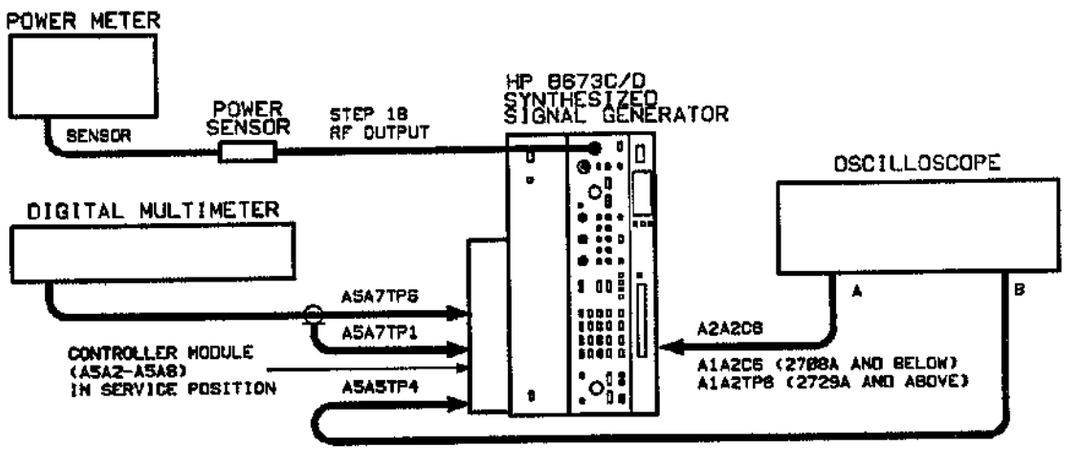


**Figure 5-26. YTF Adjustment Test Setup**

**+12.4 Volt Reference Adjustment**

2. Connect DVM to A5A7TP6, +12.4. Connect DVM ground lead to A5A7TP1, REF GND.
3. Adjust the A5A7R8, +12.4V, for 12.400 ± .005 Vdc.



www.valuetronics.com

### YTF DAC Sensitivity Adjustment

4. Connect a scope to A5A5TP4, PK DAC. Connect the scope ground lead to A5A5TP5.
5. Set the Signal Generator to 6 GHz and Normal Mode. Enter 33 service.
6. Adjust A5A5R60, Peak for a voltage reading of 8.6V peak to peak ±0.2V. See figure 5-27.

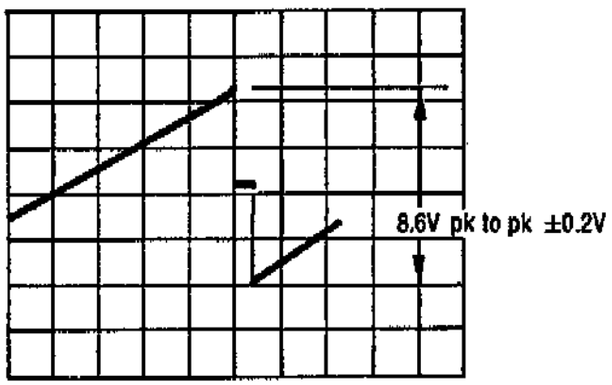


**Figure 5-27. YTF DAC Adjustment**

7. Disconnect the oscilloscope.

### YTF Alignment

8. Connect oscilloscope to Signal Generator as shown in figure 5-26. Channel 1 is connected to A1A2C6 (*2708A and below*) or A1A2TP6d (*2729A and above*). Connect Channel 2 to A5A5TP4.
9. Set oscilloscope as follows:

| | |
|---|---|
| CH1 | 0.02V/Div<br>AC coupled |
| CH2 | 0.05V/Div<br>DC coupled |
| Display Modes | Vertical Disp: CH1<br>Int Trig: CH2 Horizontal Disp: 1 vs. 2 |

10. Enter 33 Service to sweep the DAC and obtain a swept display on the oscilloscope. Adjust the horizontal display for a 10 cm wide display by adjusting the vertical gain vernier on CH2.
11. Enter 34 Service and center the dot display by adjusting the horizontal position control.
12. Enter 33 Service and set Signal Generator to ALC Diode mode. For the HP 8673D, enter 9 Service to remove the K-Band amplifier from the microwave signal path.



www.valuetronics.com

13. Set the Signal Generator to 6 GHz and Normal mode. Adjust A5A7R69, B1LO, to center the YTF passband response, as in figure 5-28.

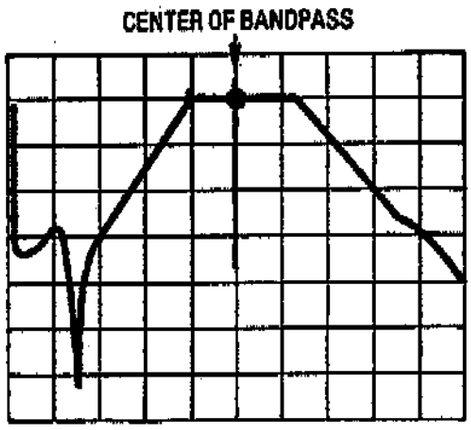


**Figure 5-28. YTF Passband Response**

14. Set the Signal Generator to 6.6 GHz and adjust A5A7R14, B1HI, to center the YTF passband response.
15. Iterate between 6 GHz and 6.6 GHz using the B1 LO and B1 HI respectively until the response is centered at both frequencies.
16. Sweep the frequency across this range to ensure passband is centered ± 1 division on oscilloscope.
17. Repeat steps 13 thru 16 for the other ranges below in table 5-4.

**Table 5-4. YTF Band Adjustments**

| Frequency Band | | | | | (HP 8673D Only) | |
|---|---|---|---|---|---|---|
| | 6.61—12.3 GHz | | 12.31—17 GHz | | 18.61—21.99 GHz | |
| Adjustment Name | B2 LO | B2 HI | B3 LO | B3 17 | B4 LO | B4 23 |
| Adj Ref Desig A5A7 | R68 | R17 | R67 | R18 | R66 | R19 |

**Note**

The B1 adjustments can affect the other band adjustments to the degree that there may be insufficient adjustment range on band 2, 3 and 4 adjustments. If this occurs readjust band 1 to allow the needed range in the other bands.

When the adjustment is completed, instrument performance can be checked in either of two ways:



www.valuetronics.com

**Note (cont'd)**

1. Perform the Output Level test in chapter 4 of the Operating Manual, focusing only on the sections where the NORMAL/BYPASS switch is in NORMAL position.
2. If an HP 85 computer and 11726-10004 software are available, perform the utility tests [k2] or [k3] to check output level across the YTF range.



www.valuetronics.com

## 5-29. 4.2 GHz Oscillator Adjustment

**Reference** Service Sheet 45

**Description** The 4.2 GHz oscillator is adjusted first to be phase locked, and second for sensitivity. This ensures that the tuning circuits can provide sufficient voltage to keep the oscillator phase locked.

**Equipment** Digital Voltmeter (DVM) ..... HP 3456A

**Procedure**

1. Connect the voltmeter to TP1/4 LOCK on A5G2 oscillator assembly. See figure 5-29. A convenient test clip for this is HP Part No. 1490-0025, which has a 4-inch probe.

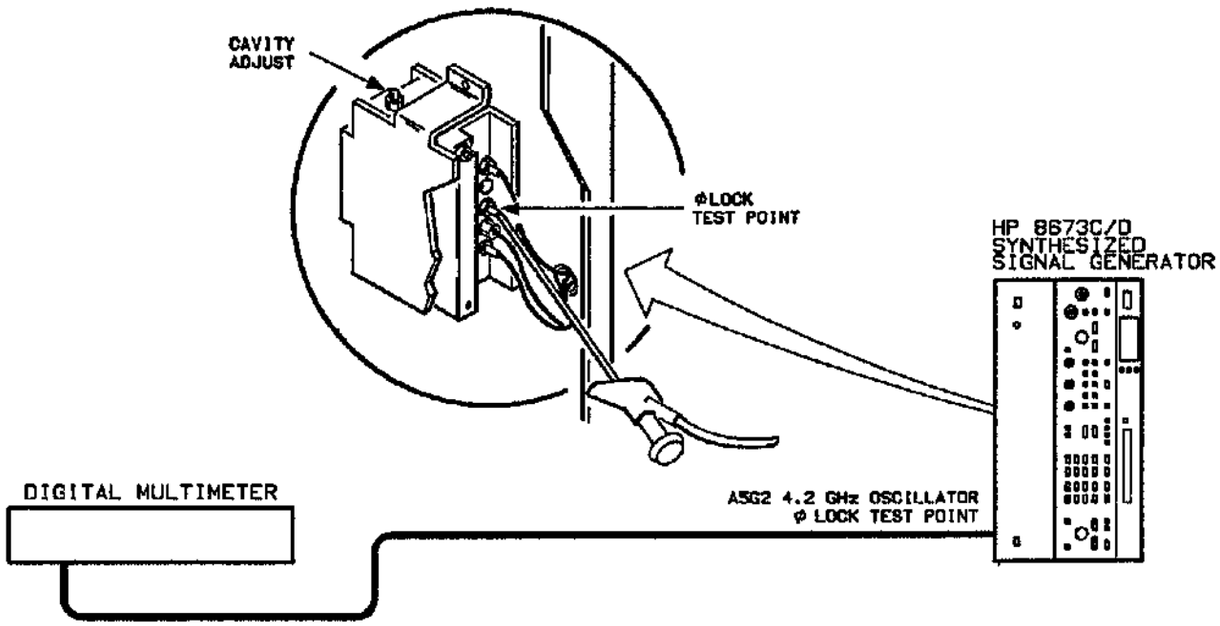


**Figure 5-29. 4.2 GHz Oscillator Adjustment Test Setup**

2. Set the voltmeter to read AC volts. Adjust the oscillator CAVITY ADJUST screw A5G2 for 0 Vac. The oscillator will now be phase locked.
3. Set the voltmeter to read DC volts. Continue fine tuning the oscillator CAVITY ADJUST screw for 8.0 Vdc. This sets the oscillator sensitivity in the center of the phase detectors range.

**Note** Before completing the fine adjustment, tap lightly on the screw and ensure that 8.0 Vdc is maintained. If not, repeat step 3 until it is.



www.valuetronics.com

## 5-30. CW LO Clamp—Manual Adjustment

**Note** This is a manual procedure. An alternate CW LO Clamp adjustment procedure follows this. It is an automated procedure which should be used if an HP-85 computer and 11726-10004 software are available.

**Reference** Service Sheet 20

**Description** Frequencies in the 0.05—2 GHz range are produced by mixing the output of the YIG Tuned Multiplier (YTM) with an internal 4.2 GHz oscillator. The YTM acts as the local oscillator and must have its level set within a particular power range. This ensures the proper LO power is fed to the input of the mixer. Too low a level can cause high harmonics at the RF output. Too high a level can cause YTM spurious oscillations (squegging).

**Equipment**

| | |
|---|---|
| Power Meter | HP 436A |
| Power Sensor | HP 8485A |

**Procedure**

1. Connect equipment as shown in figure 5-30.

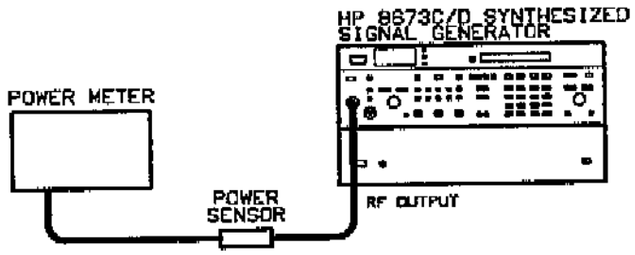


**Figure 5-30. Low Band Clamp Adjustment Test Setup**

2. Zero and calibrate the power meter.
3. On the Signal Generator:
   a. Press [RCL] then the [0] key.
   b. Press ALC DIODE [•] key which opens the ALC loop allowing maximum power at the front panel.
   c. Set output level RANGE to 0 dBm.
   d. Set frequency to 50 MHz and frequency increment to 50 MHz.
   e. Press the [5] key then press service switch A2A2S1. (This sets the NORMAL/BYPASS switch to BYPASS which directs the YTM output to the front panel.)



www.valuetronics.com

4. Tune the Signal Generator from 50 to 2000 MHz while observing the power meter reading. Record the frequency at which minimum power occurs.

   Frequency_____

5. Retune the Signal Generator to the frequency at which minimum power occurred.
6. On the Signal Generator, adjust CW LO Clamp A1A3R94 for a power meter reading of +10 dBm.
7. On the signal Generator:
   a. Press (RCL) and the (0) keys to restore normal operation.
   b. Set output level RANGE to +10 dBm.
   c. Adjust output level vernier for maximum power.
   d. Set frequency to 50 MHz and frequency increment to 100 MHz.
8. Tune the Signal Generator from 50 to 2000 MHz while observing the power meter reading. Ensure that the signal level exceeds maximum specified level at all frequencies.



www.valuetronics.com

## 5-31. CW LO Clamp—Automated Adjustment

**Note** This is an automated procedure. An alternate CW LO Clamp adjustment procedure precedes this. It is a manual procedure which should be used if an HP-85 computer and 11726-10004 software are not available.

**Reference** Service Sheet 20

**Description** Frequencies in the 0.05—2 GHz range are produced by mixing the output of the YIG Tuned Multiplier (YTM) with an internal 4.2 GHz oscillator. The YTM acts as the local oscillator and must have its level set within a particular power range. This ensures the proper L.O. power is fed to the input of the mixer. Too low a level can cause high harmonics at the RF output. Too high a level can cause YTM spurious oscillations (squegging).

**Equipment**

| | |
|---|---|
| HP-IB Controller with Optional ROM | HP 85B/00085-15002/00085-15004/ 00085-15005 |
| Power Meter | HP 436A |
| Power Sensor | HP 8485A |
| Test Cassette | HP 11726-10004 |

**Procedure**

1. Connect equipment as shown in figure 5-31.

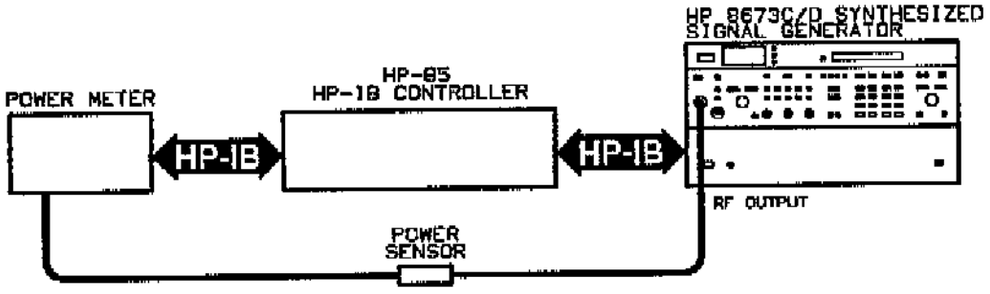


**Figure 5-31. Low Band Clamp Adjustment Test Setup**

2. Ensure that the Signal Generator and power meter HP-IB addresses are set to 19 and 13 respectively.
3. Load and run the test program "EXEC" if the Main Menu, figure 5-2, is not present on the controller screen. Instructions can be found in the paragraph titled "Automated Adjustment Procedures" in this section.
4. After the program is loaded and the Main Menu is displayed, press k6 to run the "UTILITY" program.



www.valuetronics.com

5. When the Utility Menu is displayed, press [k1] to select the Max Power Menu. A new menu will be displayed as in figure 5-32.

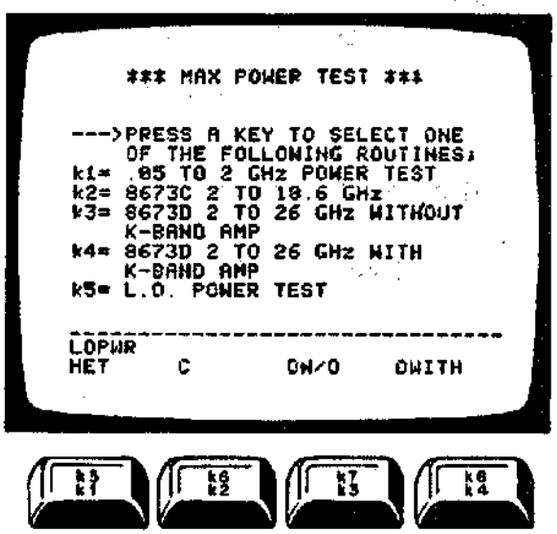


**Figure 5-32. Maximum Power Menu**

6. Press k5, LO PWR, to run the test which measures the YTM local oscillator power. A graph as shown in figure 5-33 will be printed.

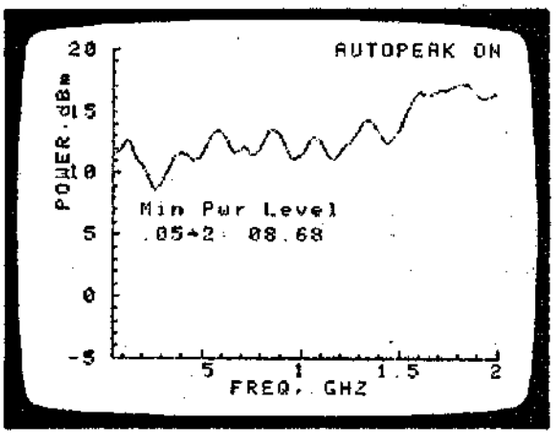


**Figure 5-33. Low Band Clamp Response**

7. After the test is run the Signal Generator will be set to the frequency at which lowest LO power occurs. Set Power Meter Cal Factor for 100%. Adjust the CW LO Clamp, A1A3R94 for a power meter reading of +10 dBm at this frequency.



www.valuetronics.com

**Note**

The program sets the Signal Generator to a special mode known as Service Function 5. In this mode, the YTM output is switched to the Signal Generator RF output in the Bypass mode. This power is normally input to the LO port of the low band mixer.

### Checking the Microwave Signal Path and Max Power Out

8. After the adjustment is performed, press [k5] to run the HET maximum power test. For the HP 8673D also run the DWITH maximum power test by pressing [k4]. DWITH should be run in the NORMAL mode instead of BYPASSED. Autopeaker should also be on. Examples of each are shown in figure 5-34 and figure 5-35 respectively.

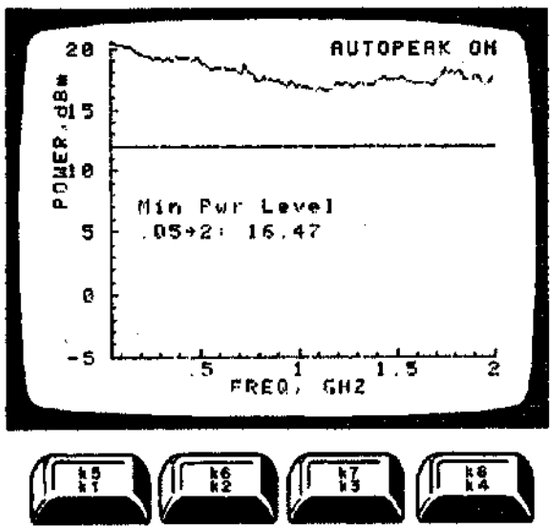


Figure 5-34. Low Band Maximum Power

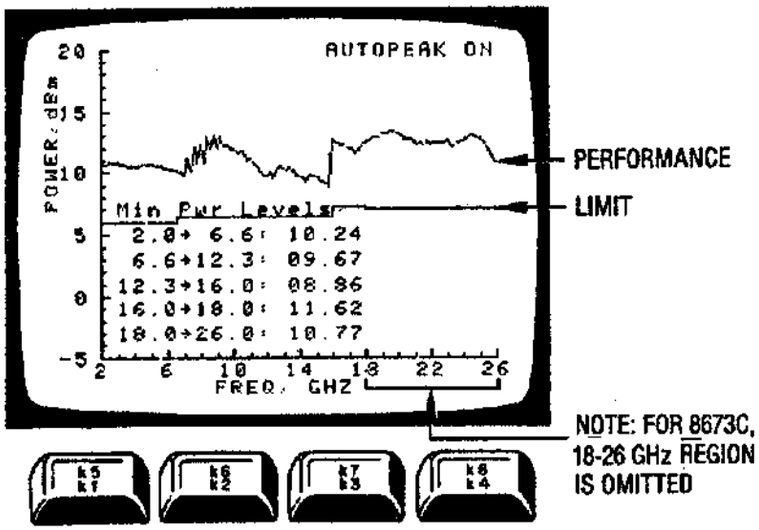


Figure 5-35. HP 8673D Maximum Power with K-Band (16—26 GHz) Amplifier



www.valuetronics.com

## 5-32. Low Band Flatness and ALC—Manual Adjustment

**Note**

This is one of four modules for Flatness and ALC adjustments in this manual. The four modules are the following:

1. Low Band Flatness and ALC—Manual Adjustment (covering Band 0, 0.05 to 2 GHz). See paragraph 5-32.
2. High Bands Flatness and ALC—Manual Adjustment (covering Bands 1 through 3 or 4, but not the +20 dBm range of System Mode). See paragraph 5-33.
3. Flatness and ALC—Automated Adjustment (covering bands 0 through 3 or 4, but not the +20 dBm range of System Mode). See paragraph 5-34.
4. System Mode ALC—Manual Adjustment (covering the +20 dBm range). See paragraph 5-35.

**Reference**

Service Sheets 36, 39, 42, and 44

**Description**

The flatness adjustments compensate for power variations caused by RF output cables, the attenuator, the crystal detector, and the directional coupler. Misadjusted flatness can cause large variations in power level as frequency changes.

The ALC adjustments include centering the ALC loop error voltage within the unleveled detector range, adjusting the AM carrier level, and calibrating the ALC log amp curve. Misadjusted ALC can cause poor AM performance, high level accuracy errors, and LVL meter errors.

**Equipment**

| | |
|---|---|
| Power Meter | HP 436A |
| Power Sensor | HP 8485A |
| Digital Voltmeter | HP 3456A or HP 3455A |

**Procedure**

**Note**

If either flatness or ALC requires adjustment, both adjustments must be performed. Flatness should be adjusted first because it affects level accuracy at most frequencies.

Different printed circuit board layouts exist. The same adjustment procedure applies to all. However, reference designations for the pots and test points are different. These parts are referred to by their descriptive name first, then by their newer reference designation and finally, in parentheses, by their older reference designation. For example, "–4" A5A2R105 (A5A2A2R29).



www.valuetronics.com

**Note (cont'd)**

Newer A5A2 reference designations apply to instruments with serial number prefixes 2829A and above. Older A5A2A1 and A5A2A2 reference designations apply to instruments with serial number prefixes 2822A and below.

### Offset Adjustments

1. Place the Signal Generator on its side as shown in figure 5-36.

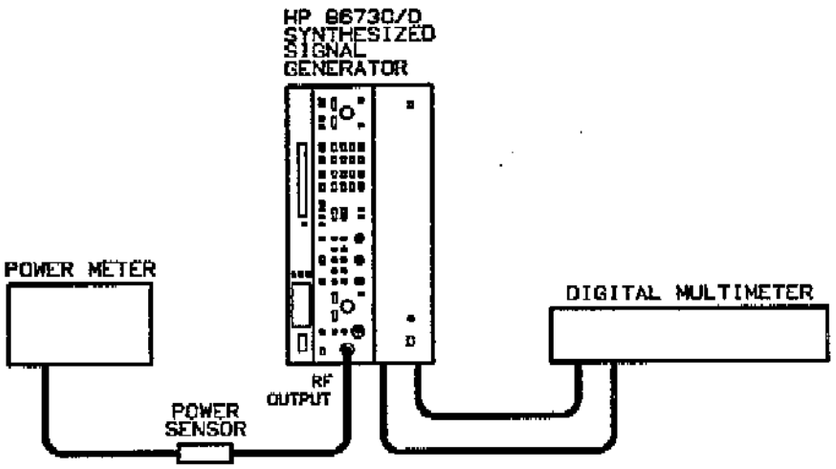


**Figure 5-36. Low Band Flatness and ALC Adjustment Setup**

2. Press (RCL) (0) on the Signal Generator.
3. Tune the Signal Generator frequency to 1.0 GHz.
4. Set the RANGE to 0 dB. Adjust the VERNIER for a power meter reading of −4.0 dBm.
5. Connect the voltmeter's positive lead to A5A8TP1 (on the A5A8 Motherboard Assembly).
6. Connect the voltmeter's ground lead to A5A3TP1.
7. Adjust "OS" A5A2R30 (A5A2A1R10) for a voltmeter reading of 0.160V ±0.0005V.
8. Disconnect the voltmeter from A5A2TP10 and A5A2TP1.
9. Set the Signal Generator's LINE switches to STBY.
10. Place Card Cage A5MP39 in the service position. See service sheet B for the procedure.
11. Connect an extender cable between A5A2J2 (A5A2A2J1) and A5W17.
12. Set the Signal Generator's LINE switches to ON.
13. Tune the frequency to 400 MHz.
14. Adjust the VERNIER for a power meter reading of 0 dBm.



www.valuetronics.com

15. Connect the voltmeter's positive lead to "BUF OUT" A5A2TP3 (A5A2C6). Connect the ground lead to chassis ground.
16. Press the RF OUTPUT ON/OFF switch to turn the RF output OFF.
17. Adjust "INT OS" A5A2R88 (A5A2A2R12) for a voltmeter reading of −0.950V ±0.02V.
18. Press the RF OUTPUT ON/OFF switch to turn the RF output ON.

### Breakpoint Adjust

**Note**

The breakpoint is nominally set at the factory. The breakpoint frequency is calculated in the following procedure for use in the Low Band Flatness Adjustments.

1. Connect the voltmeter to A5A6TP2. (See service sheet 36 for test point location.
2. Measure the voltage at A5A6TP2.
3. Calculate the breakpoint frequency using the following formula. Record the frequency.

$$F_{breakpoint} = \frac{|Voltage|}{0.003} - 4200$$

Breakpoint Frequency_____

### Low Band Flatness Adjustment

1. Connect the power meter to the RF OUTPUT connector of the Signal Generator.
2. Set the Signal Generator's RANGE to 0 dB. Adjust the VERNIER for a power meter reading of −3.0 dBm.
3. Tune the frequency to 50.0 MHz.
4. Using the TUNE knob, tune the Signal Generator from 50 to 400 MHz. Note the minimum and maximum power levels and the frequencies at which they occur.
5. Adjust "SLOPE 1" A5A6R59 to minimize the difference between the maximum and minimum power levels.
6. Tune the Signal Generator from 50 to 400 MHz. Verify that the difference between the minimum and maximum power level is less than 1.0 dB.
7. Tune the Signal Generator from 400 MHz to the breakpoint frequency (calculated earlier). Note the minimum and maximum power levels and the frequencies at which they occur.
8. Adjust "SLOPE 2" A5A6R49 to minimize the difference between the maximum and minimum power levels.



www.valuetronics.com

9. Tune the Signal Generator from 50 MHz to the breakpoint frequency. Verify that the difference between minimum and maximum power level is less than 1.0 dB.
10. Tune the Signal Generator from the breakpoint frequency to 1.975 GHz. Note the minimum and maximum power levels and the frequencies at which they occur.
11. Adjust "SLOPE 3" A5A6R48 to minimize the difference between the maximum and minimum power levels.
12. Tune the Signal Generator from 50 MHz to 1.975 MHz. Verify that the difference between minimum and maximum power level is less than 1.0 dB.

**Note**

If the SLOPE 2 and SLOPE 3 adjustments do not bring the flatness within specifications, the breakpoint frequency can be adjusted to provide better flatness. Adjusting the A5A6R43 will adjust the breakpoint frequency. If the breakpoint frequency is adjusted, the Low Band Flatness Adjustments must be performed again.

### AM Balance Adjustment

1. Set the Signal Generator's RANGE to 0 dB. Adjust the VERNIER for a power meter reading of 0.0 dBm.
2. Set AM mode to 30%.
3. Adjust "AM BAL" A5A3R43 for a power meter reading of 0.0 dBm.
4. Set AM mode to OFF, then to 30% again. There should be no noticeable output power level difference between AM OFF and AM 30%.
5. If a power level difference exists, readjust "AM BAL" A5A3R43.

### Level Meter Adjustment

1. Connect the voltmeter's positive lead to A5A5TP10. Connect the ground lead to A5A5TP1.
2. Set AM mode to OFF.
3. Set MTR mode to LVL.
4. Set RANGE to 0 dB. Adjust the VERNIER for a voltmeter reading of 0.0V ±0.05V.
5. Adjust "MET CAL" A5A3R31 for an indication of +3.0 dBm on the Signal Generator's front panel meter.
6. Adjust the VERNIER for a voltmeter reading of −6.5V ±0.05V.
7. Adjust "GAIN" A5A5R9 for an indication of −10.0 dBm on the Signal Generator's front panel meter.



www.valuetronics.com

### Overrange Adjustment

1. Set the Signal Generator's RANGE to +10 dBm.
2. Adjust the VERNIER fora voltmeter reading of −1.50V ±0.05V.
3. Record the power meter reading (the reading should be close to 0.0 dBm).

   Power meter reading_____
4. Set the Signal Generator's RANGE to +10 dBm.
5. Adjust the VERNIER for a voltmeter reading of −6.50V ±0.05V.
6. Adjust "IO VR" A5A2R1 (A5A2A1R1) for a power meter reading equal to the reading recorded in step 3.

### Internal Offset Adjustment

1. Press (RCL) and (0). Set frequency to 400 MHz, OUTPUT LEVEL RANGE to 0.0 dB, VERNIER to 0 dBm, and RF OUTPUT ON/OFF to OFF.
2. Connect the voltmeter's positive lead to "BUF OUT" A5A2TP3 (A5A2C6). Connect the ground lead to chassis ground.
3. Adjust "INT OS" A5A2R88 (A5A2A2R12) for a voltmeter reading of −0.950V ±0.1V.
4. With voltmeter still connected, put the Signal Generator's bottom cover in place but do not screw it in.
5. Allow the Signal Generator to warm up for at least 15 minutes. This stabilizes the internal temperature.
6. Remove the Signal Generator's bottom cover and quickly readjust "INT OS" A5A2R88 (A5A2A2R12) for a voltmeter reading of −0.950V ±0.02V. Then return the Signal Generator's top cover to place.
7. The voltmeter reading should remain at −0.950V ±0.02V. If it does not, repeat step 6 until it does.

### Absolute Power Level Adjustment

1. Connect the voltmeter's positive lead to A5A5TP10. Connect the ground lead to A5A5TP1.
2. Press (RCL) and (0). Set FREQUENCY to 400 MHz and OUTPUT LEVEL RANGE to 0.0 dB.
3. Adjust the VERNIER for a voltmeter reading of −6.5V ±0.05V.
4. Adjust "-10" A5A2R116 (A5A2A2R40) for a power meter reading of −10.0 dBm.
5. Adjust the VERNIER for a voltmeter reading of −3.5V ±0.05V.
6. Adjust "−4" A5A2R105 (A5A2A2R29) for a power meter reading of −4.0 dBm.



www.valuetronics.com

7. Set the Signal Generator's RANGE to +10 dB.
8. Adjust the VERNIER for a voltmeter reading of −2.5V ±0.05V.
9. Adjust "+8" A5A2R102 (A5A2A2R26) for a power meter reading of +8.0 dBm.
10. Repeat steps 2 through 9 until all power meter readings are within 0.2 dB of specifications.

**External ALC Adjustment**

1. Press [RCL] and [0] on the Signal Generator.
2. Connect a 50Ω termination to EXT ALC IN connector on the Signal Generator's front panel.
3. Connect the positive lead of the voltmeter to test point A5A3TP5. Connect the negative lead to test point A5A3TP4.
4. Tune the Signal Generator to 1 GHz.
5. Press the RF OUTPUT ON/OFF key on the Signal Generator to turn the RF output OFF.
6. Adjust "EXT OS" A5A3R12 for a voltmeter reading of 0.0 Vdc ± 10 μV.
7. Disconnect the 50Ω termination.
8. Connect the positive lead of the voltmeter to test point A5A5TP10. Connect the negative lead to test point A5A5TP1.
9. Connect a BNC cable between the Signal Generator's EXT ALC IN connector and the power meter's RECORDER OUTPUT connector.
10. Set the Signal Generator's RANGE to 0 dB.
11. Adjust the VERNIER for a voltmeter reading of −4.0V ±0.05V.
12. Press RANGE HOLD on the power meter.
13. Press the PWR MTR [•] key on the Signal Generator's front panel.
14. Set the Signal Generator's RANGE to +10 dBm.
15. Adjust the Signal Generator's VERNIER for a voltmeter reading of −2.0V ±0.05V.
16. Adjust CAL (near the EXT ALC IN connector) on the Signal Generator's front panel for a power meter reading of −1.0 dBm ±0.1 dBm.
17. Adjust the VERNIER for a voltmeter reading of −5.5V ±0.05V.
18. Adjust "EXG" A5A3R72 for a power meter reading of −8.0 dBm ±0.1 dBm.
19. Repeat steps 15 through 18 until the power meter readings are within specifications.



www.valuetronics.com

## 5-33. High Bands Flatness and ALC—Manual Adjustment

**Note**

This is one of four modules for Flatness and ALC adjustments in this manual. The four modules are the following:

1. Low Band Flatness and ALC—Manual Adjustment (covering Band 0, 0.05 to 2 GHz). See paragraph 5-32.
2. High Bands Flatness and ALC—Manual Adjustment (covering Bands 1 through 3 or 4, but not the +20 dBm range of System Mode). See paragraph 5-33.
3. Flatness and ALC—Automated Adjustment (covering bands 0 through 3 or 4, but not the +20 dBm range of System Mode). See paragraph 5-34.
4. System Mode ALC—Manual Adjustment (covering the +20 dBm range). See paragraph 5-35.

**Reference**

Service Sheets 14, 17, 19, 20 and 22

**Description**

The flatness adjustments compensate for power variations caused by RF output cables, the attenuator, the crystal detector, and the directional coupler. Misadjusted flatness can cause large variations in power level as frequency changes.

The ALC adjustments include centering the ALC loop error voltage within the unleveled detector range, adjusting the AM carrier level, and calibrating the ALC log amp curve. Misadjusted ALC can cause poor AM performance, high level accuracy errors, and LVL meter errors.

**Equipment**

| | |
|---|---|
| Power Meter | HP 436A |
| Power Sensor | HP 8485A |
| Digital Voltmeter | HP 3456A or HP 3455A |
| 50Ω Termination | HP 909D Opt. 011 |

**Procedure**

**Note**

If either flatness or ALC requires adjustment, all adjustments must be performed. Flatness should be adjusted first because it affects level accuracy at most frequencies.

Different printed circuit board layouts exist. The same adjustment procedure applies to all. However, reference designations for the pots and test points are different. These parts are referred to by their descriptive name first, then by their newer reference designation and finally, in parentheses, by their older reference designation. For example, "–4" A5A2R105 (A5A2A2R29).



www.valuetronics.com

**Note (cont'd)**

Newer A1A3 and A1A8 reference designations apply to instruments with serial number prefixes 2552A, and 2634A and above. Older A1A3 and A1A8 reference designations apply to instruments with serial number prefixes 2626A, 2608A, and 2540A and below.

Newer A1A2 reference designations apply to instruments with serial number prefixes 2729A and above. Older A1A2 reference designations apply to instruments with serial number prefixes 2708A and below.

### Flatness Adjustments

**Note**

Each band adjustment for flatness affects all of the higher band adjustments. If adjustment of a band is necessary, readjust the higher bands also to ensure level flatness. (For example, adjusting band 2 requires readjusting bands 3 and 4.)

1. Connect the power meter's sensor to the Signal Generator's RF OUTPUT.
2. Press [RCL] and [0].
3. Set the Signal Generator's RANGE to 0 dB. Adjust the VERNIER for a power meter reading of −3.0 dBm.
4. Press [6], then press service function switch A2A2S1. This stores the high and low frequencies for bands 1 through 4 into registers 1 through 4 respectively. Along with these frequencies, the following settings are placed into the registers: Manual sweep mode, frequency set to the start frequency, and 100 steps per sweep. Finally, it executes a RCL 1 to place the instrument into band 1 with those settings described above.
5. Adjust "−4" A1A2R105 (A1A2A2R29) for a power meter reading of −3.0 ±0.2 dBm.
6. Using the TUNE knob, tune the Signal Generator from 2.0 to 6.600 000 GHz. Note the minimum and maximum power levels and the frequencies at which they occur.
7. Adjust "2" A1A8R20 (A1A8R55) to minimize the difference between the maximum and minimum power levels.
8. Tune the Signal Generator to 2.0 GHz.
9. Readjust "−4" A1A2R105 (A1A2A2R29) for a power meter reading of −3.0 ±0.2 dBm.
10. Set the Signal Generator's SWEEP MODE to OFF.
11. Set the Signal Generator to 50 MHz with a frequency increment of 200 MHz.
12. Using the TUNE knob, tune the Signal Generator from 50 MHz to 6.600 000 GHz. (Note that the last step will have to be less



www.valuetronics.com

than 200 MHz). Verify that the difference between maximum and minimum power levels is less than 1.5 dB.

If the difference in power levels exceeds the specified limit, repeat steps 6 through 12 until satisfactory results are attained.

13. Press (RCL) and (2) to place the instrument into band 2.
14. Using the TUNE knob, tune the Signal Generator from 6.600 002 to 12.299 902 GHz. Note the minimum and maximum power levels and the frequencies at which they occur.
15. Adjust "14" A1A8R23 (A1A8R82) to minimize the difference between the maximum and minimum power levels.
16. Tune the Signal Generator to 2.0 GHz.
17. Readjust "–4" A1A2R105 (A1A2A2R29) for a power meter reading of –3.0 ±0.2 dBm.
18. Set the Signal Generator's SWEEP MODE to OFF.
19. Set the Signal Generator to 50 MHz with a frequency increment of 200 MHz.
20. Using the TUNE knob, tune the Signal Generator from 50 MHz to 12.300 000 GHz. (Note that the last step will have to be less than 200 MHz.) Verify that the difference between the maximum and minimum power levels is less than 2.0 dB.

    If the difference in power levels exceeds the specified limit, repeat steps 13 through 20 until satisfactory results are attained.
21. Press (RCL) and (3) to place the instrument into band 3.
22. Using the TUNE knob, tune the Signal Generator from 12.300 003 to 18.599 901 GHz. Note the minimum and maximum power levels and the frequencies at which they occur.
23. Adjust "18" A1A8R47 (A1A8R67) to minimize the difference between the maximum and minimum power levels.
24. Tune the Signal Generator to 2.0 GHz.
25. Readjust "–4" A1A2R105 (A1A2A2R29) for a power meter reading of –3.0 ±0.2 dBm.
26. Set the Signal Generator's SWEEP MODE to OFF.
27. Set the Signal Generator to 50 MHz with a frequency increment of 200 MHz.
28. Using the TUNE knob, tune the Signal Generator from 50 MHz to 18.600 000 GHz. (Note that the last step will have to be less than 200 MHz.) Verify that the difference between the maximum and minimum power levels is less than 2.5 dB.

    If the difference in power levels exceeds the specified limit, repeat steps 21 through 28 until satisfactory results are attained.



www.valuetronics.com

**Note** Steps 29 through 36 apply to HP 8673D's only.

29. Press [RCL] and [4] to place the instrument into band 4.
30. Using the TUNE knob, tune the Signal Generator from 18.600 004 to 25.999 904 GHz. Note the minimum and maximum power levels and the frequencies at which they occur.
31. Adjust "22" A1A8R51 (A1A8R50) to minimize the difference between the maximum and minimum power levels.
32. Tune the Signal Generator to 2.0 GHz.
33. Readjust "−4" A1A2R105 (A1A2A2R29) for a power meter reading of −3.0 ±0.2 dBm.
34. Set the Signal Generator's SWEEP MODE to OFF.
35. Set the Signal Generator to 50 MHz with a frequency increment of 200 MHz.
36. Using the TUNE knob, tune the Signal Generator from 50 MHz to 26.000 000 GHz. (Note that the last step will have to be less than 200 MHz.) Verify that the difference between the maximum and minimum power levels is less than 3.5 dB.

    If the difference in power levels exceeds the specified limit, repeat steps 29 through 36 until satisfactory results are attained.

### Centering the ALC Loop Error Voltage

1. Tune the Signal Generator from 50 MHz to 18.600 000 GHz (26.000 000 GHz for HP 8673D). Record the minimum and maximum power levels.

   Minimum Power Level_____
   Maximum Power Level_____

2. Tune the Signal Generator to a frequency that has a power level halfway betweeen the minimum and maximum output power levels recorded in the previous step.

**Note** Remaining adjustments are made at this frequency setting where the power level is halfway between the minimum and maximum. Do not change the frequency for the remainder of this procedure.

### AM Balance Adjustment

1. Set the Signal Generator's RANGE to 0 dB. Adjust the VERNIER for a power meter reading of −3.0 dBm.
2. Set AM mode to 30%.
3. Adjust "AM BAL" A1A3R43 for a power meter reading of −3.0 dBm.



www.valuetronics.com

4. Set AM mode to OFF, then to 30% again. There should be no noticeable output power level difference between AM OFF and AM 30%.
5. If a power level difference exists, readjust "AM BAL" A1A3R43.

### Level Meter Adjustment

1. Connect the voltmeter's positive lead to A1A5TP10. Connect the ground lead to A1A5TP1.
2. Set AM mode to OFF.
3. Set MTR mode to LVL.
4. Set RANGE to 0 dB. Adjust the VERNIER for a voltmeter reading of 0.0V ±0.05V.
5. Adjust "MET CAL" A1A3R31 for an indication of +3.0 dBm on the Signal Generator's front panel meter.
6. Adjust the VERNIER for a voltmeter reading of −6.5V ±0.05V.
7. Adjust "GAIN" A1A5R9 for an indication of −10.0 dBm on the Signal Generator's front panel meter.

### Overrange Adjustment

1. Set the Signal Generator's RANGE to 0 dB.
2. Adjust the VERNIER for a voltmeter reading of −1.50V ±0.05V.
3. Record the power meter reading (the reading should be close to 0.0 dBm).

   Power meter reading_____
4. Set the Signal Generator's RANGE to +10 dBm.
5. Adjust the VERNIER for a voltmeter reading of −6.50V ±0.05V.
6. Adjust "IO VR" A1A2R1 (A1A2A1R1) for a power meter reading equal to the reading recorded in step 3.

### Internal Offset Adjustment

1. Connect the voltmeter's positive lead to "BUF OUT" A1A2TP3 (A1A2C6). Connect the ground lead to chassis ground.
2. Press the RF OUTPUT ON/OFF key on the Signal Generator's front panel to turn the RF output OFF.
3. Adjust "INT OS" A1A2R88 (A1A2A2R12) for a voltmeter reading of −0.920V ±0.1V.
4. With voltmeter still connected, put the Signal Generator's top cover in place but do not screw it in.
5. Allow the Signal Generator to warm up for at least 15 minutes. This stabilizes the internal temperature.



www.valuetronics.com

6. Remove the Signal Generator's top cover and quickly readjust "INT OS" A1A2R88 (A1A2A2R12) for a voltmeter reading of −0.920V ±0.02V. Then return the Signal Generator's top cover to place.
7. The voltmeter reading should remain at −0.920V ±0.02V. If it does not, repeat step 6 until it does.

### Absolute Power Level Adjustment

1. Connect the voltmeter's positive lead to A1A5TP10. Connect the ground lead to A1A5TP1.
2. Set the Signal Generator's RANGE to 0 dB.
3. Adjust the VERNIER for a voltmeter reading of −6.5V ±0.05V.
4. Adjust "-10" A1A2R116 (A1A2A2R40) for a power meter reading of −10.0 dBm.
5. Adjust the VERNIER for a voltmeter reading of −3.5V ±0.05V.
6. Adjust "−4" A1A2R105 (A1A2A2R29) for a power meter reading of −4.0 dBm.
7. Set the Signal Generator's RANGE to +10 dB.
8. Adjust the VERNIER for a voltmeter reading of −2.5V ±0.05V.
9. Adjust "+8" A1A2R102 (A1A2A2R26) for a power meter reading of +8.0 dBm.
10. Repeat steps 2 through 9 until all power meter readings are within 0.2 dB of specifications.

### External ALC Adjustment

1. Press [RCL] and [0] on the Signal Generator.
2. Connect a 50Ω termination to EXT ALC IN connector on the Signal Generator's front panel.
3. Connect the positive lead of the voltmeter to test point A1A3TP9 (A1A3TP5). Connect the negative lead to test point A1A3TP3 (A1A3TP4).
4. Tune the Signal Generator to 2 GHz.
5. Press the RF OUTPUT ON/OFF key on the Signal Generator to turn the RF output OFF.
6. Adjust "EXT OS" A1A3R12 for a voltmeter reading of 0.0 Vdc ± 10 $\mu$V.
7. Disconnect the 50Ω termination.
8. Connect the positive lead of the voltmeter to test point A1A5TP10. Connect the negative lead to test point A1A5TP1.



www.valuetronics.com

9. Connect a BNC cable between the Signal Generator's EXT ALC IN connector and the power meter's RECORDER OUTPUT connector.
10. Set the Signal Generator's RANGE to 0 dB.
11. Adjust the VERNIER for a voltmeter reading of −4.0V ±0.05V.
12. Press RANGE HOLD on the power meter.
13. Press the PWR MTR ⊙ key on the Signal Generator's front panel.
14. Set the Signal Generator's RANGE to +10 dBm.
15. Adjust the Signal Generator's VERNIER for a voltmeter reading of −2.0V ±0.05V.
16. Adjust CAL (near the EXT ALC IN connector) on the Signal Generator's front panel for a power meter reading of −1.0 dBm ±0.1 dBm.
17. Adjust the VERNIER for a voltmeter reading of −5.5V ±0.05V.
18. Adjust "EXG" A1A3R72 for a power meter reading of −8.0 dBm ±0.1 dBm. (Reference designation for EXG is the same in older and newer Signal Generators.)
19. Repeat steps 15 through 18 until the power meter readings are within specifications.



www.valuetronics.com

## 5-34. Flatness and ALC—Automated Adjustment

**Note**

This is one of four modules for Flatness and ALC adjustments in this manual. The four modules are the following:

1. Low Band Flatness and ALC—Manual Adjustment (covering Band 0, 0.05 to 2 GHz). See paragraph 5-32.
2. High Bands Flatness and ALC—Manual Adjustment (covering Bands 1 through 3 or 4, but not the +20 dBm range of System Mode). See paragraph 5-33.
3. Flatness and ALC—Automated Adjustment (covering bands 0 through 3 or 4, but not the +20 dBm range of System Mode). See paragraph 5-34.
4. System Mode ALC—Manual Adjustment (covering the +20 dBm range). See paragraph 5-35.

This procedure can only be used if you have an HP 85 computer and 11726-10004 software available. If these are not available, perform the manual adjustments that come before this procedure.

**Reference**

Service Sheets 14, 17, 19, 20, 22, 36, 39, 42, and 44

**Description**

**Automated Adjustment.** The flatness adjustments compensate for power variations caused by RF output cables, the attenuator, the crystal detector, and the directional coupler. Misadjusted flatness can cause large variations in power level as frequency changes.

The ALC adjustments include centering the ALC loop error voltage within the unleveled detector range, adjusting the AM carrier level, and calibrating the ALC log amp curve. Misadjusted ALC can cause poor AM performance, high level accuracy errors, and LVL meter errors.

There are two separate ALC subsystems which must be adjusted in the Signal Generator for both flatness and ALC. This is performed with the two separate programs. (See figure 5-37.)

[k1] thru [k3] accesses routines for adjusting the wideband ALC subsystems, which levels frequencies in the 2—18.6 GHz range for HP 8673C or 2—26 GHz range for HP 8673D.

[k4], HET, loads and runs the program for adjusting the low band ALC subsystem. It levels frequencies in the low band, 0.05—2.0 GHz, range. Selecting this program will produce a similar adjustment menu. [k1] will adjust flatness, and [k2] and [k3] will adjust Internal and External ALC, respectively.

In both menus for wideband or low band ALC, k5 loads the program for adjusting pulse. k8 will return control to the "EXEC" program.



www.valuetronics.com

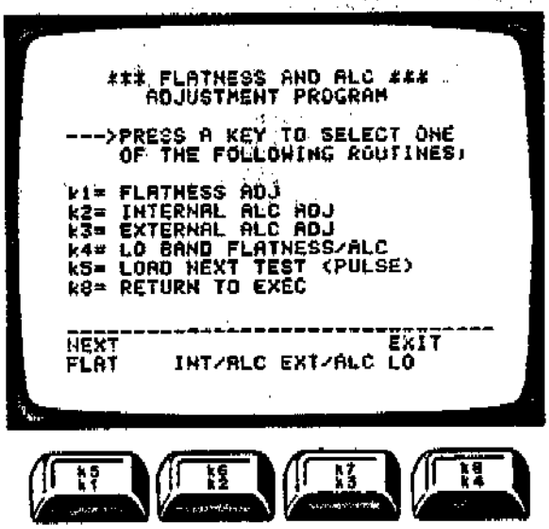


**Figure 5-37. Flatness and ALC Adjustment Menu**

**Flatness.** The flatness adjustment procedure for either wideband or HET is performed as follows:

a. The program runs a flatness plot of the Signal Generator, which is displayed on the controller screen.

b. The program calculates and draws the specification lines and optimum slope for each of the four flatness regions.

c. A copy of the flatness plot is printed. See figure 5-38.

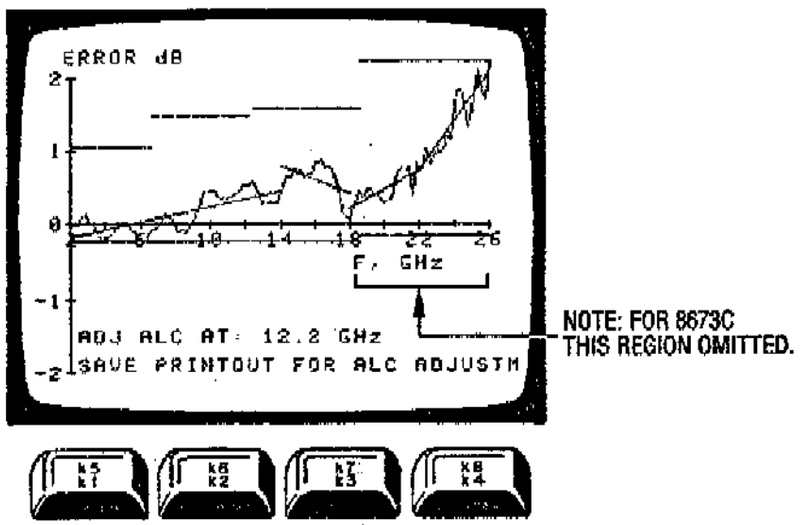


**Figure 5-38. Typical Flatness Plot Before Adjustment**

d. Three or four axes for the HP 8673C and HP 8673D respectively, representing the slope adjustment for each flatness region, are drawn on the controller screen (see figure 5-39). The center



www.valuetronics.com

of each axis represents zero error (the optimum slope for that region). The "X" is adjusted as close as possible for zero error.

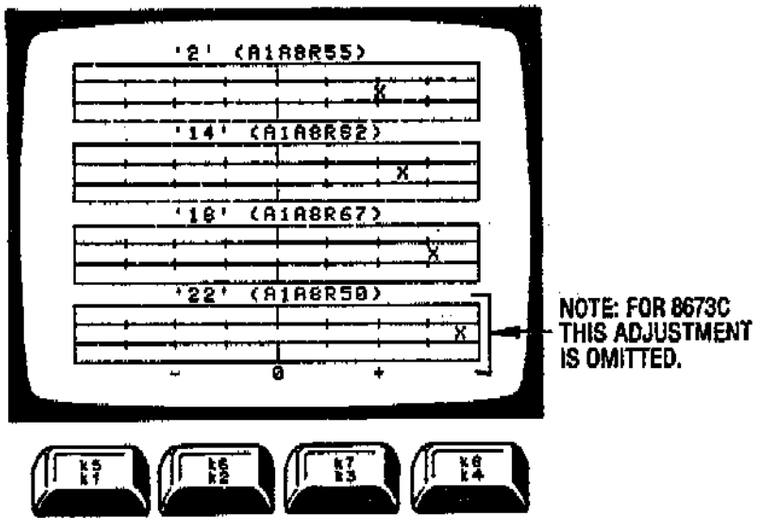


**Figure 5-39. Flatness Adjustment**

e. After the flatness adjustments are made, the controller will print a new flatness plot. Included on the plot is an ALC adjustment frequency that is used in the ALC portion of this adjustment procedure.

**ALC.** The ALC adjustment procedure is performed as follows:

a. The front panel meter's mechanical zero is set for a mechanical indication of exactly zero on the lower scale.

b. The ALC adjustment frequency, provided on the flatness plot printout, is entered into the controller.

c. The ALC loop error voltage is centered within the unleveled detector's window.

d. AM carrier level (with no modulation input) is set to the same power level as the CW level (AM off).

e. Vernier and meter circuits are adjusted.

f. The overrange adjustment is set to obtain the same RF level in and out of the overrange mode.

g. The internal ALC log amp curve is adjusted to produce an output voltage proportional to the log of the detected input power (in watts) at all levels. This ensures that the proper output power level will be obtained across the full vernier range.

h. The external ALC log amp is adjusted to minimize dc offset and to center the operating range of the external leveling circuitry.



www.valuetronics.com

## Equipment

| | |
|---|---|
| Power Meter | HP 436A |
| Power Sensor | HP 8485A |
| Digital Voltmeter | HP 3456A |
| HP-IB Controller with Optional ROM | HP 85B/00085-15002/ 00085-15004/00085-15005 |
| Test Cassette | HP 11726-10004 |
| 50Ω Termination | HP 909D Opt. 011 |

## Procedure

**Note** If either flatness or ALC requires adjustment, both adjustments must be performed. Flatness should be adjusted first because it affects level accuracy at most frequencies.

### Preliminary Settings

1. Press [RCL] and [0] on the Signal Generator.
2. Connect a 50Ω termination to EXT ALC IN connector on the Signal Generator's front panel.
3. Connect the positive lead of the voltmeter to test point A1A3TP9 (A1A3TP5). Connect the negative lead to test point A1A3TP3 (A1A3TP4).
4. Tune the Signal Generator to 2 GHz.
5. Press the RF OUTPUT ON/OFF key on the Signal Generator to turn the RF output OFF.
6. Adjust "EXT OS" A1A3R12 for a voltmeter reading of 0.0 Vdc ±10 μV. (Reference designation for EXT OS is the same in older and newer Signal Generators.)
7. Disconnect the 50Ω termination and voltmeter.

### Automated Procedure

1. Set the Signal Generator's HP-IB address to 19, set the voltmeter's HP-IB address to 22, and set the power meter's HP-IB address to 13.
2. Calibrate the power meter to the power sensor.
3. Connect the equipment as shown in figure 5-40.



www.valuetronics.com

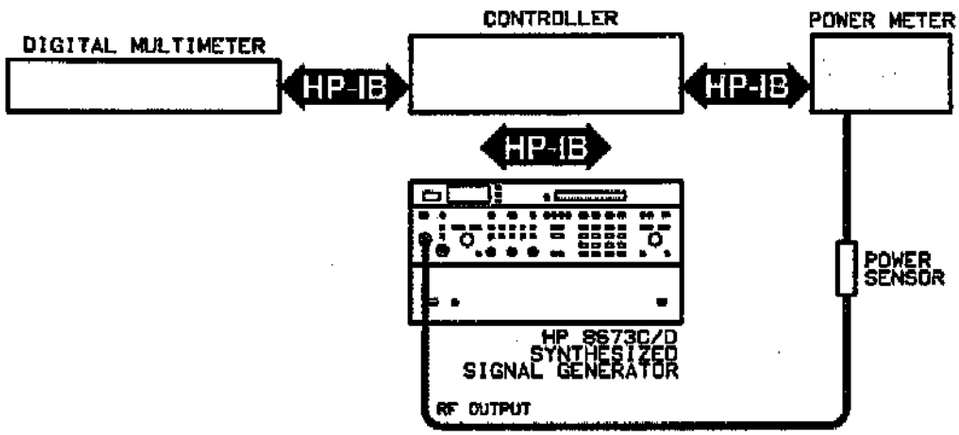


**Figure 5-40. Flatness and ALC Adjustment Test Setup**

4. Load the test program "EXEC" if the Main Menu, figure 5-2, is not presently displayed. Instructions can be found in the paragraph titled "Automated Adjustment Procedures" in this section.
5. After the program is loaded and the Main Menu is displayed, press [k3] to run the Flatness and ALC adjustment program.
6. Instructions for the remainder of the procedure will be displayed on the controller's screen. The program will indicate when the flatness and ALC adjustments are completed.

**Note**

Different printed circuit board layouts exist. The same adjustment procedure applies to all. However, reference designations for the pots and test points are different. Old and new reference designations are cross referenced in the following list. Reference designations that are not listed have not changed.



www.valuetronics.com

**Note (cont'd)**

| Old Reference Designations | Name | New Reference Designations |
|---|---|---|
| A1A2C6 | BUF OUT | A1A2TP6 |
| A1A2A1R1 | IOVR | A1A2R1 |
| A1A2A2R12 | INT OS | A1A2R88 |
| A1A2A2R26 | +8 | A1A2R102 |
| A1A2A2R29 | −4 | A1A2R105 |
| A1A2A2R40 | −10 | A1A2R116 |
| A1A3TP4 | EXT GND | A1A3TP3 |
| A1A3TP5 | test point | A1A3TP9 |
| A1A8R50 | 22 | A1A8R51 |
| A1A8R55 | 2 | A1A8R20 |
| A1A8R67 | 18 | A1A8R47 |
| A1A8R82 | 14 | A1A8R23 |
| A5A2TP1 (error, should be A5A3TP1) | ALC REF GND | A5A3TP1 |
| A5A2A1R1 | OVR | A5A2R1 |
| A5A2A1R30 | OS | A5A2R30 |
| A5A2A2C6 (error, should be A5A2C6) | BUF OUT | A5A2TP3 |
| A5A2A2R12 | INT OS | A5A2R88 |
| A5A2A2R29 | −3 | A5A2R105 |
| A5A2A2R40 | −10 | A5A2R116 |

Older reference designations for A1A2, A1A2A1, and A1A2A2 apply to instruments with serial number prefixes 2708A and below. Newer serial number prefixes apply to instruments with serial number prefixes 2729A and above.

Older reference designations for A1A3 and A1A8 apply to instruments with serial number prefixes 2626A, 2608A, and 2540A and below. Newer serial number prefixes apply to instruments with serial number prefixes 2552A, and 2634A and above.

Older reference designations for A5A2, A5A2A1, and A5A2A2 apply to instruments with serial number prefixes 2822A and below. Newer serial number prefixes apply to instruments with serial number prefixes 2829A and above.



www.valuetronics.com

## 5-35. System Mode ALC—Manual Adjustment

**Note**

This is one of four modules for Flatness and ALC adjustments in this manual. The four modules are the following:

1. Low Band Flatness and ALC—Manual Adjustment (covering Band 0, 0.05 to 2 GHz). See paragraph 5-32.
2. High Bands Flatness and ALC—Manual Adjustment (covering Bands 1 through 3 or 4, but not the +20 dBm range of System Mode). See paragraph 5-33.
3. Flatness and ALC—Automated Adjustment (covering bands 0 through 3 or 4, but not the +20 dBm range of System Mode). See paragraph 5-34.
4. System Mode ALC—Manual Adjustment (covering the +20 dBm range). See paragraph 5-35.

This procedure applies only to instruments with serial number prefixes 2552A, and 2634A and above. Instruments with serial number prefixes 2626A, 2608A, and 2540A and below are not millimeter-wave system compatible and do not have the +20 dBm range.

**Reference**

Service Sheet 17, 20, 22

**Description**

The external system mode ALC is adjusted for the +20 dB RANGE. This ensures optimum accuracy of the +20 dB RANGE when the Signal Generator is used in system mode.

**Equipment**

| | |
|---|---|
| Digital Voltmeter | HP 3456A or HP 3455A |
| External ALC Amplifier | Locally Fabricated |
| 50Ω Termination | HP HP 909D Opt. 011 |
| Power Supply | HP 6200B |

**Procedure**

**Note**

This test requires an external amplifier. The amplifier can be fabricated using the circuit shown in figure 5-41.

1. Connect the DVM OUT connector of the external amplifier to the voltmeter.
2. Connect the ALC OUT connector of the external amplifier to the EXT ALC IN connector of the Signal Generator.
3. Apply power to the external amplifier.
4. Attach a 50Ω termination to the ALC IN connector of the external amplifier.



www.valuetronics.com

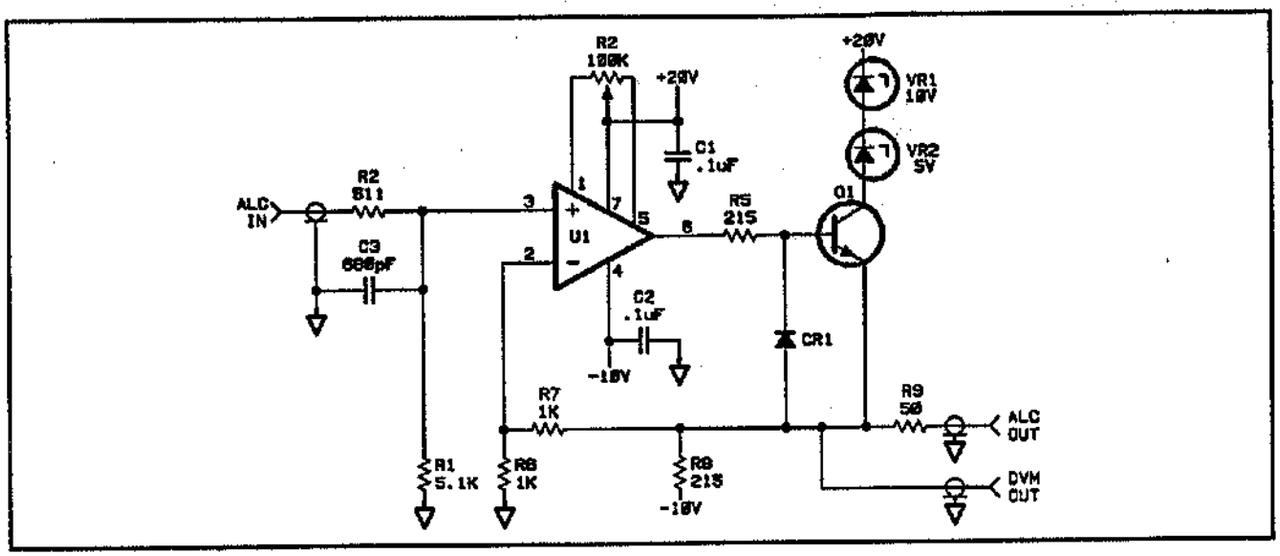


Figure 5-41. External ALC Amplifier

**Material List for External ALC Amplifier**

| Reference Designator | Component Value | Part Number |
|---|---|---|
| R1 | 5.11 kΩ, 1%, .125W | 0757-0438 |
| R2 | 511 Ω, 1%, .125W | 0757-0416 |
| R3 | 100 kΩ variable | 2100-3094 |
| R5 | 215 Ω, 1%, .05W | 0698-7220 |
| R6 | 1 kΩ, 1%, .125W | 0757-0280 |
| R7 | 1 kΩ, 1%, .125W | 0757-0280 |
| R8 | 215 Ω, 1%, .5W | 0698-3401 |
| R9 | 50 Ω, 1%, .1W | 0699-0452 |
| C1 | 0.1 μF | 0160-0576 |
| C2 | 0.1 μF | 0160-0576 |
| C3 | 680 pF | 0160-4824 |
| CR1 | Switching Diode | 1901-0050 |
| U1 | Operational Amplifier | 1826-0413 |
| Q1 | 2N5943, NPN | 1854-0597 |
| VR1 | Zener Diode, 10V | 1902-0958 |
| VR2 | Zener Diode, 5.1V | 1902-0951 |

5. Adjust R3 on the external amplifier for a voltmeter reading of 0.0V, ± 0.1 mV. This minimizes any dc offset of the amplifier.
6. Disconnect the 50Ω termination from the ALC IN connector of the external amplifier.
7. Connect the equipment as shown in figure 5-42.



www.valuetronics.com

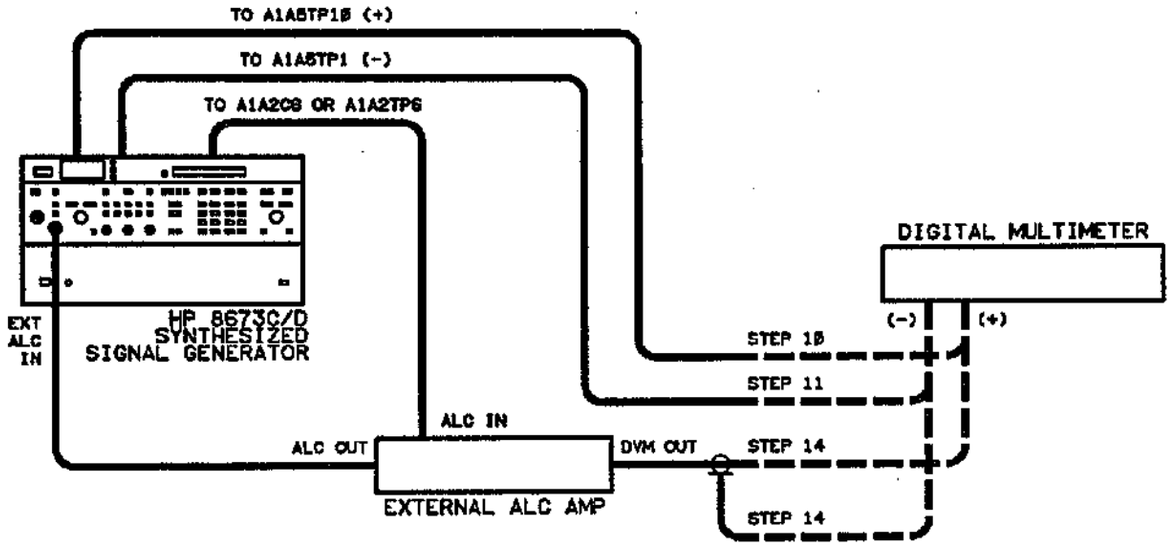


**Figure 5-42. External System Mode ALC Adjustment Test Setup**

8. Press the SHIFT then DIODE (•) key on the Signal Generator to invoke system mode ALC. Note that both the INTERNAL and SYS/DIODE key indicators light.
9. Set the OUTPUT LEVEL RANGE on the Signal Generator to 0 dB.
10. Connect the positive lead of the voltmeter to A1A5TP10.
11. Connect the negative lead of the voltmeter to A1A5TP1.
12. Adjust the OUTPUT LEVEL VERNIER on the Signal Generator for a voltmeter reading of −1.5 Vdc ±0.05V. This corresponds to an output level of 0 dBm.
13. Connect the ALC IN connector of the external amplifier to A1A2C6, the top feed-through capacitor of the detector board. This is the output of the log amplifier and provides a dc voltage that is proportional to output power in dB.
14. Adjust A1A3R105 ("SO") for a voltmeter reading of 0.0 Vdc ±0.0005V.
15. Connect the positive lead of the voltmeter to A1A5TP10.
16. Connect the negative lead of the voltmeter to A1A5TP1.
17. Adjust the OUTPUT LEVEL VERNIER on the Signal Generator for a voltmeter reading of −6.50 Vdc ±0.05V. This corresponds to an output level of −10 dBm.
18. Connect the voltmeter to the DVM OUT connector of the external amplifier.
19. Adjust A1A3R21 ("SG") for a voltmeter reading of −600 mVdc ±0.5 mV. This sets the gain of the system circuitry for 30 mV/dB.



www.valuetronics.com

20. Set the Signal Generator's OUTPUT LEVEL RANGE to +10 dB. DO NOT readjust the VERNIER.
21. Adjust A1A2R20 ("EOVR") for a voltmeter reading of 0.0 Vdc ±0.5 mV.
22. Set the Signal Generator's RANGE to +20 dB. DO NOT readjust the VERNIER.
23. Adjust A1A3R98 ("S20") for a voltmeter reading of +600 mVdc ±0.5 mV.



www.valuetronics.com

## 5-36. AM Bandwidth Adjustment

**Reference** Service Sheet 14

**Description** ALC loop gain is adjusted separately for each band to optimize ALC loop stability, level switching speed, AM bandwidth. Each band is scanned in small steps to determine where maximum rolloff and peaking occur in the ALC response. The bandwidth is then adjusted to optimize the above three performance parameters.

**Equipment**

| | |
|---|---|
| Spectrum Analyzer | HP 8566B |
| 50Ω Termination | HP 11593A |

**Procedure**

**Note**

Different printed circuit board layouts exist. The same adjustment procedure applies to all. However, reference designations for the pots and test points are different. These parts are referred to by their descriptive name first, then by their newer reference designation and finally, in parentheses, by their older reference designation. For example, "B1" A1A2R61 (A1A2A1R61).

Newer A1A2 reference designations apply to instruments with serial number prefixes 2729A and above. Older A1A2A1 reference designations apply to instruments with serial number prefixes 2708A and below.

Newer A5A2 reference designations apply to instruments with serial number prefixes 2829A and above. Older A5A2 and A5A2A1 reference designations apply to instruments with serial number prefixes 2822A and below.



www.valuetronics.com

1. Connect the equipment as shown in figure 5-43.
2. Key in [RCL] [0] and then set the Signal Generator to the following conditions:

| | |
|---|---|
| Start Frequency | 2 GHz |
| Stop Frequency | 6.6 GHz |
| Step Size | 10 MHz |
| Output Level | 0 dBm |
| AM Mode | 100% |
| Meter Scale | AM |
| AUTO PEAK | Off |
| NORMAL/BYPASS | NORMAL |

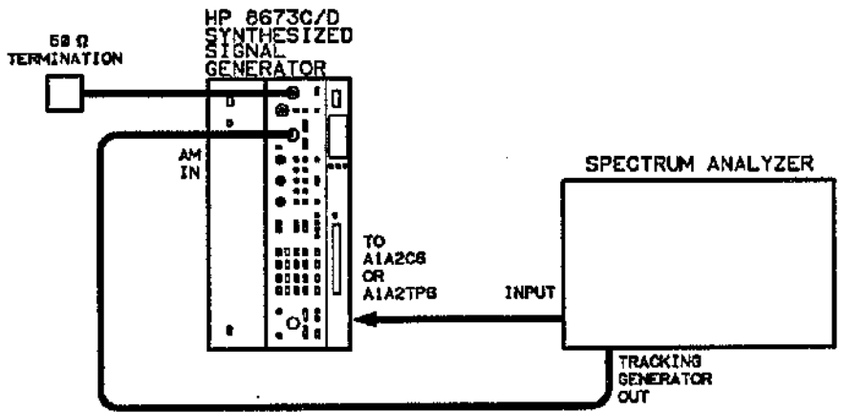


**Figure 5-43. AM Bandwidth Adjustment Test Setup**

3. Center the following components: "B1" A1A2R61 (A1A2A1R61), "B2" A1A2R59 (A1A2A1R59), "B3" A1A2R58 (A1A2A1R58), "B4" A1A2R57 (A1A2A57) and "B1" A5A2R61 (A5A2A1R61).
4. Adjust the tracking generator level on the spectrum analyzer so that the Signal Generator's meter reads approximately 30% AM.
5. Change the Signal Generator's meter scale to LVL.
6. Set the spectrum analyzer to sweep between 0 and 200 kHz. Set the spectrum analyzer's vertical sensitivity to 2 dB per division. Adjust the spectrum analyzer's log reference level and linear sensitivity to set the left portion of the displayed signal on a convenient CRT graticule line (two or three divisions from the top of the screen). This represents the reference level for determining AM rolloff.
7. Using the manual sweep mode, tune the Signal Generator from 2.0—6.6 GHz in 20 MHz steps to determine where the sharpest rolloff occurs in the AM response.

   This corresponds to the highest negative difference in level at the far right of the display (200 kHz) as compared to the reference at the left side (0 kHz).



www.valuetronics.com

8. When the sharpest rolloff frequency is found, vary the Signal Generator's output level from −10 dBm to maximum to determine at what level the sharpest rolloff occurs. (Maximum is defined in the following tables. You will see that maximum output level depends on the model number, serial number prefix, and option configuration of your signal generator. Maximum output level also depends on the position of the NORMAL/BYPASS switch.)
9. At the worst-case rolloff frequency and level, adjust "B1" A1A2R61 (A1A2A1R61) to set the AM rolloff to −3 dB at 200 kHz as displayed on the spectrum analyzer.
10. Vary the output level from −10 to +5 dBm to determine at what level the sharpest peaking occurs.
11. If this peaking level exceeds +2 dB with respect to 0 Hz, readjust B1 to obtain +2 dB.
12. Return to the frequency and level of maximum rolloff and verify that the rolloff does not exceed −3 dB at a 100 kHz rate.
13. Recheck in Bypass mode. (Maximum is different for Normal and Bypass modes.)

**Note**

The other three bands (B2, B3, and B4) are adjusted in a manner similar to band 1 (B1). Perform steps 14 through 18 for each adjustment listed in the table.

14. For each adjustment, tune the Signal Generator over the corresponding range listed in the Frequency Range column of the appropriate table. Determine where the sharpest rolloff occurs in the AM response.
15. When the sharpest rolloff frequency is found, vary the Signal Generator's output level from −10 dBm to maximum.
16. At the worst-case rolloff frequency and level, set the appropriate adjustment for AM rolloff of −3 dB at 200 kHz as displayed on the spectrum analyzer.
17. Vary the output level over the range used in step 14 to determine at what level the sharpest peaking occurs.
18. If this peaking level exceeds +2 dB with respect to 0 Hz, readjust the adjustment for +2 dB.
19. Return to the frequency and level of maximum rolloff and verify that the rolloff does not exceed −3 dB at a 100 kHz rate.
20. Recheck in Bypass Mode.
21. Connect the Spectrum Analyzer's input to "BUF OUT" A5A2TP3 (A5A2C6). Repeat steps 14 through 19 to adjust "B1" A5A2R61 (A5A2A1R61) over the frequency range 50 to 1990 MHz. Maximum output level is listed below. (Maximum output



www.valuetronics.com

level is the same for HP 8673C and HP8673D, for all serial number prefixes, and it applies to Normal mode only.)

Std: maximum = +11 dBm
001: maximum = +12 dBm
004: maximum = +10 dBm
005: maximum = +12 dBm

**HP 8673C, All Serial Number Prefixes, Normal Mode Maximum Output Level**

| Adjustment | Frequency Range (MHz) | Std (dBm) | Opt. 001 (dBm) | Opt. 004 (dBm) | Opt. 005 (dBm) |
|---|---|---|---|---|---|
| "B1" A1A2R61 (A1A2A1R61) | 2000-6600 | +5 | +7 | +4 | +6 |
| "B2" A1A2R59 (A1A2A1R59) | 6620-12300 | +5 | +7 | +4 | +6 |
| "B3" A1A2R58 (A1A2A1R58) | 12320-16000 | +5 | +7 | +4 | +6 |
| | 16020-18600 | +2 | +4 | +1 | +3 |

**HP 8673C, All Serial Number Prefixes, Bypass Mode Maximum Output Level**

| Adjustment | Frequency Range (MHz) | Std (dBm) | Opt. 001 (dBm) | Opt. 004 (dBm) | Opt. 005 (dBm) |
|---|---|---|---|---|---|
| "B1" A1A2R61 (A1A2A1R61) | 2000-6600 | +8 | +10 | +7 | +9 |
| "B2" A1A2R59 (A1A2A1R59) | 6620-12300 | +8 | +10 | +7 | +9 |
| "B3" A1A2R58 (A1A2A1R58) | 12320-16000 | +8 | +10 | +7 | +9 |
| | 16020-18600 | +5 | +7 | +4 | +6 |



www.valuetronics.com

## SERVICE SHEET BD8 (cont'd)

### Table 8-27. Frequency Data Signatures

| PIN NO. | SIGNATURE | MNEMONIC |
|---|---|---|
| A2A1A-34 | U5P4 | FD0 |
| 36 | PCFP | FD5 |
| A2A1B-4 | 932C | FD6 |
| 19 | A3H2 | FD1 |
| 25 | U92H | FD2 |
| 26 | H886 | FD7 |
| 27 | 2599 | FD3 |
| 28 | 0977 | DLE |
| 29 | 3U2F | NUME |
| 31 | 0371 | FD4 |

### Table 8-28. Front Panel Driver Assembly Signatures

| PIN NO. | SIGNATURE | MNEMONIC |
|---|---|---|
| U1-2 | 9691 | BDL3-1 |
| 3 | 9691 | BDL3-4 |
| 6 | 2FHC | |
| 9 | 2FHC | |
| U3-4 | CA4A | |
| 5 | 07PF | BDL4-4 |
| U4-1 | HA9P | BDL4-5 |
| U5-1 | 8F11 | PRW |
| 2 | 548H | |
| 3 | A3H2 | FD1 |
| 4 | 0371 | FD4 |
| 6 | 0798 | |
| 7 | U5P4 | FD0 |
| 8 | PCFP | FD5 |
| 11 | 4UP2 | U5-11 |
| 13 | H886 | FD7 |
| 14 | 932C | FD6 |
| 16 | 9H89 | |
| 17 | 2599 | FD3 |
| 18 | U92H | FD2 |
| 19 | 2UF3 | |
| U6-1 | 8F11 | PRW |
| 2 | 965F | |
| 3 | A3H2 | FD1 |
| 4 | 0371 | FD4 |
| 5 | 672F | |
| 6 | 5624 | |
| 7 | U5P4 | FD0 |
| 8 | PCFP | FD5 |
| 11 | C1PA | U6-11 |
| 12 | 9453 | |
| 13 | H886 | FD7 |
| 14 | 932C | FD6 |
| 15 | FFA9 | |
| 16 | A381 | |
| 17 | 2599 | FD3 |
| 18 | U92H | FD2 |
| 19 | 98C1 | |
| U7-1 | 8F11 | PRW |
| 2 | 8F05 | |
| 3 | A3H2 | FD1 |
| 4 | 0371 | FD4 |
| 5 | FP43 | |
| 6 | 47CF | |
| 7 | U5P4 | |
| 8 | PCFP | FD5 |
| 9 | U72U | |
| U7-11 | U1F9 | U7-11 |
| 12 | F68C | |
| 13 | H886 | FD7 |
| 14 | 932C | FD6 |
| 15 | 9886 | |
| 16 | FA45 | |
| 17 | 2599 | FD3 |
| 18 | U92H | FD2 |
| 19 | 774P | |
| U8-1 | 8F11 | PRW |
| 3 | A3H2 | FD1 |
| 4 | 0371 | FD4 |
| 5 | 9691 | |
| 7 | U5P4 | FD0 |
| 8 | PCFP | FD5 |
| 9 | 9751 | |
| 11 | P31P | U8-11 |
| 13 | H886 | FD7 |
| 14 | 932C | FD6 |
| 15 | 0CF6 | |
| 17 | 2599 | FD3 |
| 18 | U92H | FD2 |
| U9-1 | 8F11 | PRN |
| 2 | F842 | |
| 3 | A3H2 | FD1 |
| 4 | 0371 | FD4 |



www.valuetronics.com

**HP 8673D, Serial Prefixes 3031A and Above, Normal Mode Maximum Output Level**

| Adjustment | Frequency Range (MHz) | Std (dBm) | Opt. 001 (dBm) | Opt. 004 (dBm) | Opt. 005 (dBm) |
|---|---|---|---|---|---|
| "B1" A1A2R61 | 2000-6600 | +5 | +7 | +4 | +6 |
| "B2" A1A2R59 | 6620-12300 | +5 | +7 | +4 | +6 |
| "B3" A1A2R58 | 12320-16000 | +5 | +7 | +4 | +6 |
| | 16020-18600 | +10 | +12 | +8 | +10 |
| "B4" A1A2R57 | 18620-26000 | +10 | +12 | +8 | +10 |

**HP 8673D, Serial Prefixes 3031A and Above, Bypass Mode Maximum Output Level**

| Adjustment | Frequency Range (MHz) | Std (dBm) | Opt. 001 (dBm) | Opt. 004 (dBm) | Opt. 005 (dBm) |
|---|---|---|---|---|---|
| "B1" A1A2R61 | 2000-6600 | +8 | +10 | +7 | +9 |
| "B2" A1A2R59 | 6620-8000 | +8 | +10 | +7 | +9 |
| | 8020-12300 | +10 | +11 | +9 | +10 |
| "B3" A1A2R58 | 12320-16000 | +10 | +11 | +9 | +10 |
| | 16020-18600 | +10 | +12 | +8 | +10 |
| "B4" A1A2R57 | 18620-26000 | +10 | +12 | +8 | +10 |



www.valuetronics.com

## 5-37. AM Accuracy and Meter Adjustment

**Reference** Service Sheets 20, 21, 40, and 42

**Description** The AM log amp is adjusted for calibrated AM depth accuracy and the AM meter circuit is adjusted for accurate indication of AM depth.

**Equipment**

| | |
|---|---|
| Digital Voltmeter (DVM) | HP 3456A or HP 3455A |
| Modulation Analyzer | HP 8902A/HP 11722A |
| Amplifier | HP 8447E or HP 8447F |
| Test Oscillator | HP 8116A |
| Mixer | RHG DMS1-26 |
| Local Oscillator | HP 8340B |

**Procedure**

1. Connect the equipment as shown in figure 5-44.

**Note** Connect the mixer directly to the local oscillator to avoid any power loss.

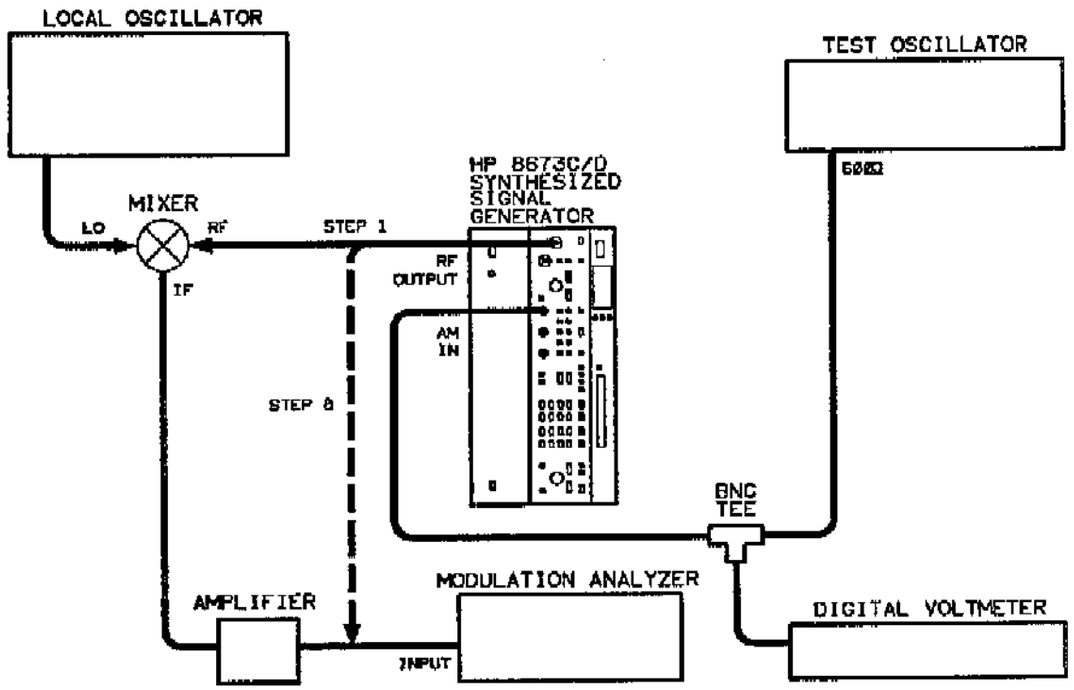


**Figure 5-44. AM Accuracy and Meter Adjustment Test Setup**

2. On the Signal Generator press [RCL] [0]. Set the instrument to 2 GHz, −25 dBm output level, 100% AM, and AM meter scale.



www.valuetronics.com

3. Set the local oscillator to 2.07 GHz at +5 dBm.
4. Set the test oscillator's amplitude for a voltmeter reading of 0.5303 Vrms at 1 kHz.
5. Adjust "AM CAL" A1A3R83 on the Function Assembly for a modulation analyzer reading of 73.00 ±0.01% AM depth.

**Note**

AM CAL is set to 73% AM instead of 75% AM to compensate for internal temperature variations. With the covers installed the actual 75% AM corresponds to the meter reading of 75% AM.

6. Adjust "AM MTR" A1A6R84 on the meter assembly so that the signal generator's meter reads exactly 75% on the middle scale.
7. On the Signal Generator press [RCL] and [0]. Set the instrument to 70 MHz, 0 dBm output level, 100% AM, and AM meter scale.
8. Disconnect the amplifier from the modulation analyzer and connect the Signal Generator's output directly to the modulation analyzer's input.
9. Adjust "AM CAL" A5A3R83 on the Function assembly for a modulation analyzer reading of 73.00 ±0.01% AM depth.
10. Adjust "AM MTR" A5A6R22 on the Meter assembly so that the Signal Generator's meter reads exactly 75% on the middle scale.



www.valuetronics.com

## 5-38. Pulse Modulation Adjustment

**Reference** Service Sheets 15, 17, 22, and 39.

**Description** The pulse clamp circuitry is adjusted to the low level dynamic range of the internal ALC detector circuitry in pulse mode. This prevents excessively long response times at low duty cycles. The maximum output of the Pulse Amplitude Control (PAC) DAC is adjusted with all DAC bits set high. This affects the range and resolution of the YTM bias sensing that supplies the input to the pulse amplitude control (PAC) circuit. The YTM injected pulse width is adjusted to provide pre-biasing of the YTM step-recovery diode at the proper time. The series pulse width between adjustment is set so as to not conflict with the shunt pulse. The relative timing between the series and shunt pulses is critical for proper modulation performance. The ALC sample pulse timing is adjusted to select the optimum time period for which the ALC loop is activated for pulse purposes. The ALC sample pulse fine adjustments are set to minimize the difference in power between CW (continuous wave) and pulse modes at minimum pulse width. The minimum pulse width indicator circuit is adjusted to turn on the UNLEVELED status annunciator when the pulse width becomes less than 100 ns.

**Equipment**

| | |
|---|---|
| Digital Voltmeter | HP 3456A or HP 3455A |
| Oscilloscope | HP 1980B/19860A |
| Pulse Generator | HP 8116A or HP 8013B |
| HP-IB Controller | HP 85B/00085-15002/00085-15004/00085-15005 |
| Crystal Detector | HP 8473C |
| Test Cassette | HP 11726-10002 |
| Shunt Adapter | Fabricated Locally (see figure 5-48) |

**Procedure**

**Note**

Different printed circuit board layouts exist. The same adjustment procedure applies to all. However, reference designations for the pots and test points are different. These parts are referred to by their descriptive name first, then by their newer reference designation and finally, in parentheses, by their older reference designation. For example, "PCP" A1A2R97 (A1A2A2R21).

Newer A1A2 reference designations apply to instruments with serial number prefixes 2729A and above. Older A1A2 and A1A2A1 reference designations apply to instruments with serial number prefixes 2708A and below.



www.valuetronics.com

**Note (cont'd)**

Newer A5A2 reference designations apply to instruments with serial number prefixes 2829A and above. Older A5A2 reference designations apply to instruments with serial number prefixes 2822A and below.

### Pulse Clamp and PAC DAC Sensitivity—Manual Adjustment

**Note**

This is a manual procedure. An alternate Pulse Clamp and PAC DAC Sensitivity adjustment procedure follows this. It is an automated procedure which should be used if an HP-85 computer and 11726-10004 software are available.

1. On the Signal Generator, set RF ON/OFF to ON and PULSE NORM to on.
2. Connect the digital multimeter to "BUF OUT" A1A2TP6 (A1A2C6).
3. Adjust "PCP" A1A2R97 (A1A2A2R21) for −0.61 ±0.03 Vdc.
4. Connect the digital multimeter to the lower box "BUF OUT" A5A2TP3 (A5A2C6).
5. Adjust "PCP" A5A2R97 (A5A2A2R21) for −0.61 ±0.03 Vdc.
6. Connect digital multimeter to "BIAS 2" A1A5TP2. Jumper "BIAS TRK" A1A5TP3 to chassis ground.
7. Set RF ON/OFF to ON.
8. Adjust "BIAS" A1A5R47 for +2.750 ±0.005 Vdc.
9. Remove jumper and digital multimeter.

### Pulse Clamp and PAC DAC Sensitivity—Automated Adjustment

**Note**

This is an automated procedure. An alternate Pulse Clamp and PAC DAC Sensitivity adjustment procedure precedes this. It is a manual procedure which should be used if an HP-85 computer and 11726-10004 software are not available.



www.valuetronics.com

**Note (cont'd)**

Some of the reference designations for the pots and test points have changed. Old and new reference designations are referenced in the following list. Reference designations that are not listed have not changed.

| Old Reference Designations | Name | New Reference Designations |
|---|---|---|
| A1A2C6 | BUF OUT | A1A2TP6 |
| A1A2A2R21 | PCP | A1A2R97 |
| A5A2C6 | BUF OUT | A5A2TP3 |
| A5A2A2R21 | PCP | A5A2R97 |

1. Set the Signal Generator's HP-IB address to 19.
2. Connect the equipment as shown in figure 5-45.

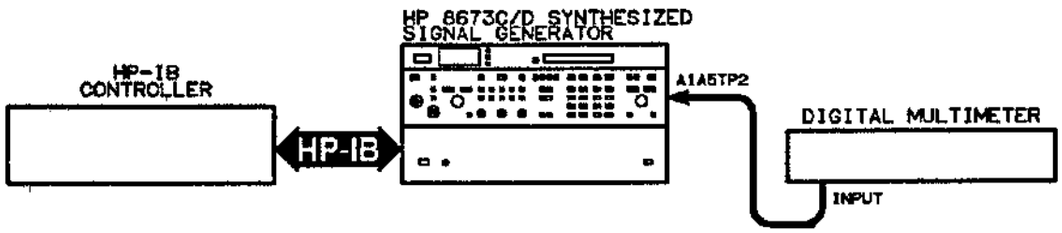


**Figure 5-45. PAC DAC Adjustment Test Setup**

3. Load the test program "EXEC" if the Main Menu, figure 5-2, is not presently displayed. Instructions can be found in the paragraph entitled "Automated Adjustment Procedures" in this chapter.
4. After the program is loaded and the Main Menu is displayed, press [k4] to run the "Pulse" adjustment program.
5. When the Pulse adjustment program appears press [k1], DACSENS, to select the PAC DAC adjustment routine.
6. Instructions for the remainder of the procedure will be displayed on the controller's screen.

### YTM Injected Pulse Width Adjustment

**Note**

This adjustment is not critical and is being reserved for future options.

1. Set "YPW" A1A4R19 to the center of its range.



www.valuetronics.com

### Series Pulse Width Adjustment

1. Connect the pulse generator to the oscilloscope as shown in figure 5-46.

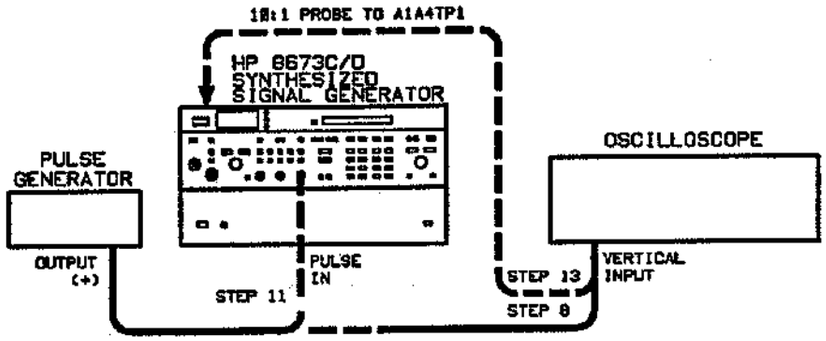


**Figure 5-46. Series Pulse Width Adjustment Test Setup**

2. Set the pulse generator pulse period range to 20 ns – 1 $\mu$s range, pulse delay range to the 35 ns – 1 $\mu$s range, pulse width range to 10 ns – 1 $\mu$s, and the amplitude range to 4 –10 Vpk. Select pulse DOUBLE/NORM to NORM, output NORM/COMPL to NORM, Offset ($\mu$ Output) to OFF, and INT load to OUT.
3. Set the oscilloscope's vertical input to DC coupled, 50Ω impedance and adjust the pulse generator's amplitude for a 5V peak-to-peak signal, the pulse period to 1 $\mu$s, and the pulse width to approximately 200 ns using the waveform displayed on the oscilloscope.
4. Connect the output of the pulse generator to the PULSE IN connector on the Signal Generator.
5. Set the oscilloscope's input to AC mode, 1 MΩ impedance.
6. Connect the input of the oscilloscope to A1A4TP1 using a 10:1 high frequency probe.
7. Set the oscilloscope's vertical sensitivity to 0.1V per division.
8. On the Signal Generator, set the frequency to 6.6 GHz and select PULSE NORM mode.
9. Adjust the pulse generator's pulse delay to center the pulse waveform on the oscilloscope display.
10. Adjust "SPW" A1A4R25 to obtain the waveform shown in figure 5-47.



www.valuetronics.com

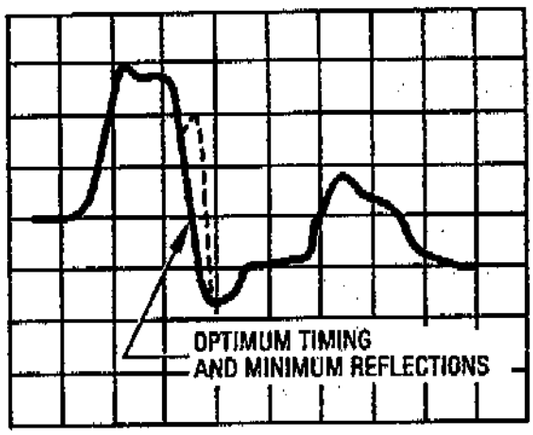


**Figure 5-47. Series Pulse Width Waveform**

### ALC Sample Pulse Adjust

1. Set "MPW" A1A4R9 fully clockwise.
2. Set the pulse generator's pulse period to 1 $\mu$s and the pulse width to 98 $\mu$s.
3. Connect a 10:1 high impedance probe from the channel 1 input of the oscilloscope to "SMPL" A1A4TP14.
4. Set the Signal Generator's frequency to 6.6 GHz and PULSE NORM mode to on.
5. Set the oscilloscope as follows:
   a. Channel 1 = 2 V/Div, dc coupled.
   b. Channel 2 = .005 V/Div, dc coupled, 50Ω.
   c. Display Modes = vert disp to alt, horiz disp to main, sweep mode to auto, main trig to dc, ext; time/div to 0.05 $\mu$s.
6. Connect channel 2 to the shunt adapter (figure 5-48) output as shown in figure 5-49. The cable between the oscilloscope and the shunt adapter must not be longer than 24 inches.

**Note**

The shunt adapter can easily be fabricated using 2 BNC connectors and a 147 ohm resistor as shown in figure 5-48.



www.valuetronics.com

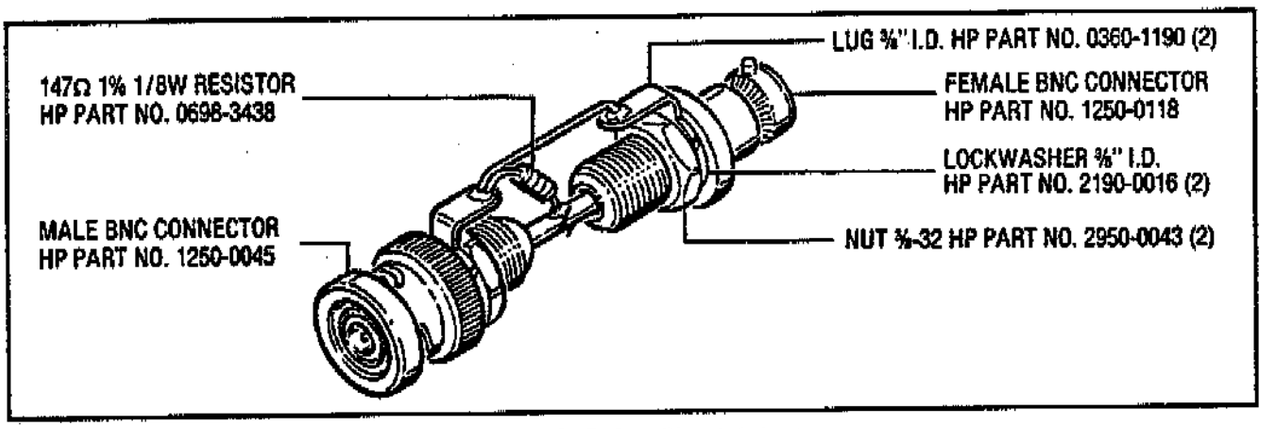


**Figure 5-48. Pulse Shunt Adapter**

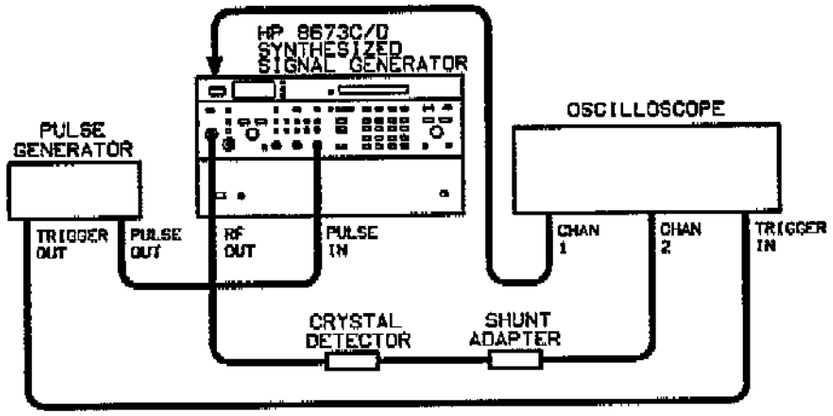


**Figure 5-49. ALC Sample Pulse Adjustment Test Setup**

7. Set the Signal Generator's output level to +10 dBm.
8. Adjust channel 2 vertical sensitivity for maximum vertical deflection.
9. On the pulse generator, set the pulse period to approximately 1 $\mu$s and the pulse width to 100 ± 3 ns using the displayed RF detected pulse waveform on channel 2 of the oscillocope.
10. Switch the Signal Generator between PULSE NORM and PULSE OFF modes.
11. Adjust "TE" A1A4R43 to minimize the difference between PULSE OFF (CW) and PULSE NORM modes. The modes should be within ± 1 dB of each other on the scope display.

**Note** The display can be calibrated to show ± 1 dB using the output level vernier control and the Signal Generator's front panel meter.



www.valuetronics.com

12. Set the Signal Generator's output level to −10 dBm or the lowest power out that will give at least 4 divisions of deflection on the oscilloscope's 1 mV/div range. Change oscilloscope channel 2 coupling to dc (switch out of 50Ω mode).

**Note**

The closer the adjustment point is to −10 dBm output power, the more accurate the measurement becomes as long as a four division deflection is maintained.

13. Readjust the oscilloscope's channel 2 vertical sensitivity for a display greater than 4 divisions.
14. Adjust "LE" A1A4R52 to minimize the difference between PULSE OFF and PULSE NORM modes.
15. Repeat steps 7 through 14 until the error is minimized at both power levels. Remember to use dc 50Ω coupling when making the high output level adjustment.

**Note**

Try to adjust sample pulse as wide as possible while not sacrificing accuracy in order to do so. See figure 5-50.

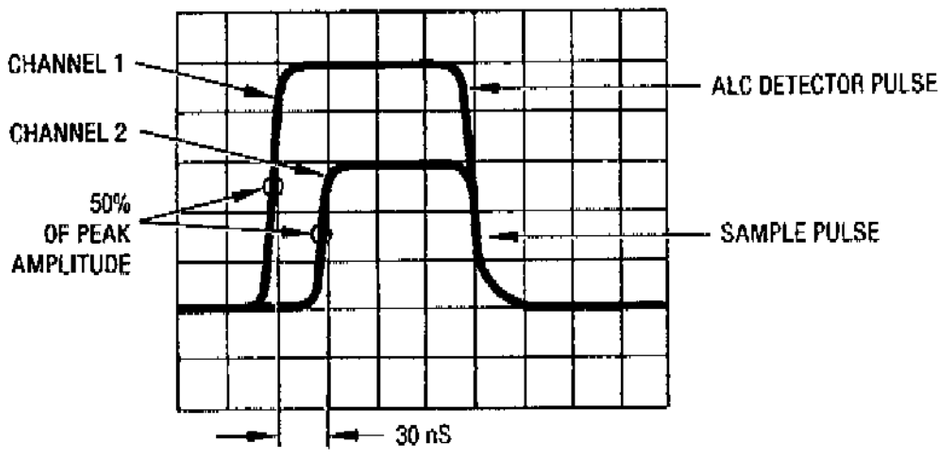


**Figure 5-50. ALC Sample Pulse Waveform**

**Minimum Pulse Width Indicator Adjustment**

1. Set the Signal Generator to PULSE NORM mode and output frequency to 6.6 GHz.
2. Set "MPW" A1A4R9 fully clockwise.
3. Set the pulse generator's pulse period to approximately 1 $\mu$s and the pulse width to 80 ±3 ns using the oscilloscope display.
4. Adjust "MPW" A1A4R9 in a counterclockwise direction until the Signal Generator's front panel UNLEVELED status annunciator just turns off.



www.valuetronics.com

5. Set the pulse generator's pulse width vernier fully clockwise, then slowly rotate it counterclockwise. The UNLEVELED status annunciator should turn on after the pulse width narrows to less than 100 ns.



www.valuetronics.com

## 5-39. Pulse Amplitude Control—Manual Adjustment

**Note**

This procedure applies only to instruments with serial number prefixes 2626A, 2608A, and 2540A and below. In other instruments, adjustments have been replaced by data in the SRD Bias Board ROM A1A8U13. Data is unique for each YTM and instrument.

This is a manual procedure. An alternate Pulse Amplitude Control procedure follows this. It is an automated procedure which should be used if an HP 85 computer and 11726-10004 software are available.

**Reference**

Service Sheet 19

**Description**

The amplitude of the YTM Bias pulse affects rise time, overshoot, and general pulse shape of the pulse modulat ed microwave carrier. This amplitude is controlled by the pulse amplitude control (PAC) voltage. To maintain good pulse shape over the Signal Generators full frequency and output level range, the PAC voltage must be adjusted properly. The required PAC voltage will vary with both frequency and output level setting of the Signal Generator. The level of the PAC voltage in each harmonic frequency band is controlled by a slope and offset adjustment. The label for each adjustment is as follows:

| Frequency: | Band 2 | Band3 | Band4 |
|---|---|---|---|
| Adjustment: | B2 OF<br>B2 SL | B3 OF<br>B3 SL | B4 OF<br>B4 SL |

**Equipment**

| | |
|---|---|
| Oscilloscope | HP 1980B/19860A |
| Pulse Generator | HP 8116A or HP 8013B |
| Crystal Detector | HP 8473C |
| Shunt Adapter | Locally fabricated (see figure 5-48) |

**Procedure**

1. Connect the equipment as shown in figure 5-51.
2. On the Signal Generator:
   a. Press [6] key.
   b. Press service switch A2A2S1.
3. On Pulse Generator:
   a. Set pulse period range to 20 ns −1 μs.
   b. Set pulse delay range to 35 ns −1 μs.
   c. Set pulse width range to 10 ns −1 μs.
   d. Set MODE to NORM.
   e. Set POL to POS.



www.valuetronics.com

f. Set amplitude range to 4 to 10 Vpk.

g. Set OFFSET (+Output) to OFF.

h. Set INT LOAD to OUT.

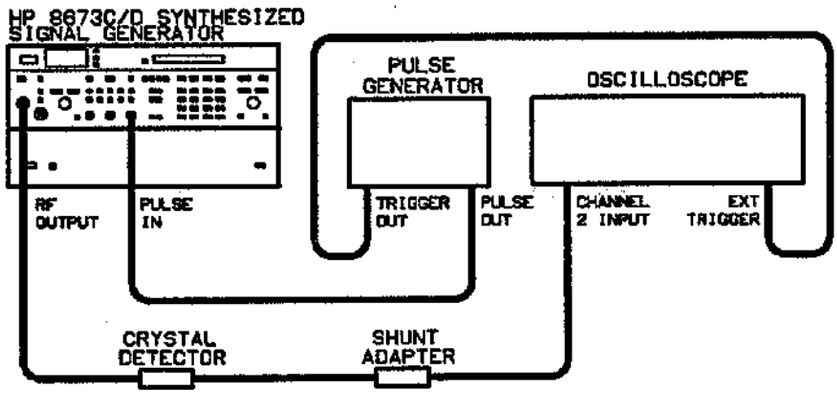


**Figure 5-51. Pulse Amplitude Control Manual Adjustment Test Setup**

4. Set Oscilloscope channel 2 input to DC coupled, 50Ω impedance, inverted. Adjust Pulse Generator amplitude to display waveform as shown in figure 5-52.

5. On the Signal Generator:

   a. Press [RCL] then [2] keys.

   b. Set OUTPUT LEVEL RANGE to 0.0 dB.

   c. Using OUTPUT LEVEL VERNIER, set output power level to −10 dBm.

   d. Set PULSE NORM to ON.

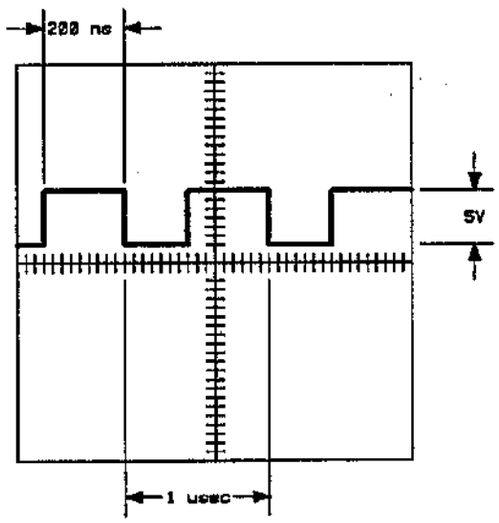


**Figure 5-52. PAC Adjustment Waveform**



www.valuetronics.com

6. Set the Signal Generator frequency to 6.600 002 GHz. Set Oscilloscope input coupling to DC 1MEGΩ.
   a. Adjust "B2 OF" A1A8R13 overshoot and undershoot to under 20%.
7. Using TUNE KNOB, tune the Signal Generator to 12.2 GHz.
   a. Adjust "B2 SL" A1A8R10 for a pulse shape with less than 20% overshoot and undershoot.
8. Using TUNE KNOB, tune the Signal Generator to 6.600 002 GHz. Using OUTPUT LEVEL VERNIER, set output power level to +3 dBm. Switch Oscilloscope input coupling to DC 50Ω.
   a. Adjust "B2 OF" A1A8R13 for a detected pulse with less than 20% overshoot and undershoot.
9. Using TUNE KNOB, tune the Signal Generator to 12.200 000 GHz.
   a. Adjust "B2 SL" A1A8R10 for a detected pulse with less than 20% overshoot and undershoot.
10. Repeat steps 6 through 9 until four points are within specifications.
11. Using OUTPUT LEVEL VERNIER, set the Signal Generator output power level to +3 dBm.
12. Using TUNE KNOB, tune the Signal Generator from 6.600 002 GHz to 12.200 000 GHz and verify that detected pulse has less than 20% overshoot and undershoot.
13. Repeat steps 11 and 12 with output power levels of −5 and −10 dBm. Use DC 1MEGΩ coupling to view −10 dBm pulse.
14. On the Signal Generator:
    a. Press [RCL] then [3] keys.
    b. Set frequency to 12.300 003 GHz.
    c. Set OUTPUT LEVEL RANGE to 0.0 dB.
    d. Using OUTPUT LEVEL VERNIER, set output power level to −10 dBm.
    e. Adjust "B3 OF" A1A8R14 for a detected pulse with less than 20% overshoot and undershoot.
15. Using TUNE KNOB, tune the Signal Generator to 18.5999 901 GHz.
    a. Adjust "B3 SL" A1A8R11 for a detected pulse with less than 20% overshoot and undershoot.
16. Using TUNE KNOB, tune the Signal Generator to 12.300 003 GHz. Using OUTPUT LEVEL VERNIER, set output power level to +3 dBm. Switch Oscilloscope input coupling to DC 50Ω.



www.valuetronics.com

a. Adjust "B3 OF" A1A8R14 for a detected pulse with less than 20% overshoot and undershoot.

17. Using TUNE KNOB, tune the Signal Generator to 18.599 901 GHz.

    a. Adjust "B3 SL" A1A8R11 for a detected pulse with less than 20% undershoot and overshoot.

18. Repeat steps 14 through 17 until all four frequency/power output levels are within specifications.

19. Set the Signal Generator output power level to +3 dBm.

20. Using TUNE KNOB, tune from 12.300 003 to 18.599 901 GHz and verify that detected pulse has less than 20% overshoot and undershoot.

21. Repeat steps 19 and 20 with output power levels of −5 and −10 dBm. Use DC 1MEGΩ coupling to view −10 dBm.

22. **For HP 8673D Only.** On the Signal Generator:

    a. Press (RCL) then (4) keys.

    b. Set frequency to 18.600 004 GHz.

    c. Set OUTPUT LEVEL RANGE to 0.0 dB.

    d. Using OUTPUT LEVEL VERNIER, set output power level to −10 dBm.

    e. Adjust "B4 OF" A1A8R15 for a detected pulse with less than 20% overshoot and undershoot.

23. Using the TUNE KNOB, tune the Signal Generator to 25.999 904 GHz.

    a. Adjust "B4 SL" A1A8R12 for a detected pulse with less than 20% overshoot and undershoot.

24. Using TUNE KNOB, tune to 18.600 004 GHz. Using OUTPUT LEVEL VERNIER, set output power level to +3 dBm. Switch oscilloscope input coupling to DC 50Ω.

    a. Adjust "B4 OF" A1A8R15 for a detected pulse with less than 20% overshoot and undershoot.

25. Using the TUNE KNOB, tune the Signal Generator to 25.999 904 GHz.

    a. Adjust "B4 SL" A1A8R12 for a detected pulse with less than 20% overshoot and undershoot.

26. Repeat steps 22 through 25 until all four frequency/power output levels are within specifications.

27. Set the Signal Generator output power level to +3 dBm.

28. Using TUNE KNOB, tune from 18.600 004 GHz to 25.999 904 GHz and verify that detected pulse has less than 20% overshoot and undershoot.



www.valuetronics.com

FIG. 8-202
Sht 3 of 4

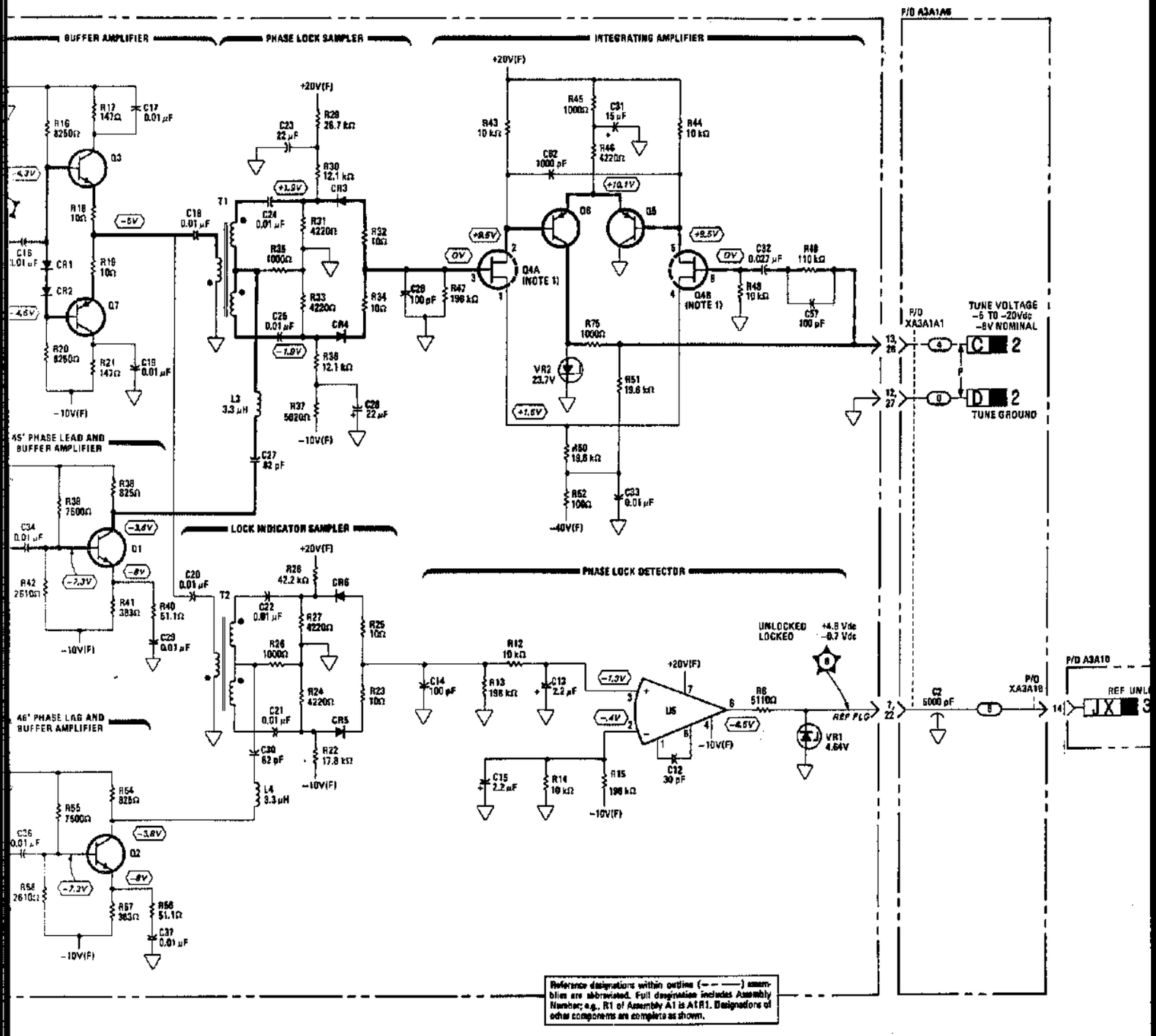


Figure

www.valuetronics.com

## 5-40. Pulse Amplitude Control—Automated Adjustment

**Note**

This procedure applies only to instruments with serial number prefixes 2626A, 2608A, and 2540A and below. In other instruments, adjustments have been replaced by data in the SRD Bias Board ROM A1A8U13. Data is unique for each YTM and instrument.

This is an automated procedure. An alternate Pulse Amplitude Control procedure follows this. It is a manual procedure which should be used if an HP 85 computer and 11726-10004 software are not available.

**Reference**

Service Sheet 19

**Description**

The amplitude of the YTM Bias pulse affects rise time, overshoot, and general pulse shape of the pulse modulat ed microwave carrier. This amplitude is controlled by the pulse amplitude control (PAC) voltage. To maintain good pulse shape over the Signal Generators full frequency and output level range, the PAC voltage must be adjusted properly. The required PAC voltage will vary with both frequency and output level setting of the Signal Generator. The level of the PAC voltage in each harmonic frequency band is controlled by a slope and offset adjustment. The label for each adjustment is as follows:

| Frequency: | Band 2 | Band3 | Band4 |
|---|---|---|---|
| Adjustment: | B2 OF | B3 OF | B4 OF |
| | B2 SL | B3 SL | B4 SL |

### Pulse Program Menu

The PAC voltage adjustment is computer assisted and runs on an HP 85B controller. To run the program, load the "Autost" file on the Test Cassette, HP Part No. 11726-10004. Press run when loaded. After the "EXEC" Program Main Menu is displayed, press the special function key [k4], PULSE. This will load and run the Pulse adjustment routine. The following Pulse Program Menu will then be displayed.



www.valuetronics.com

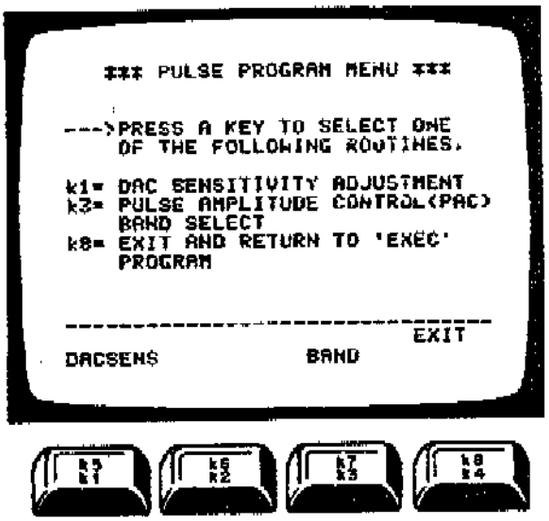


Figure 5-53. Pulse Program Menu

The user then selects [k3], Band. After [k3] is pressed a new menu (figure 5-54) will be displayed.

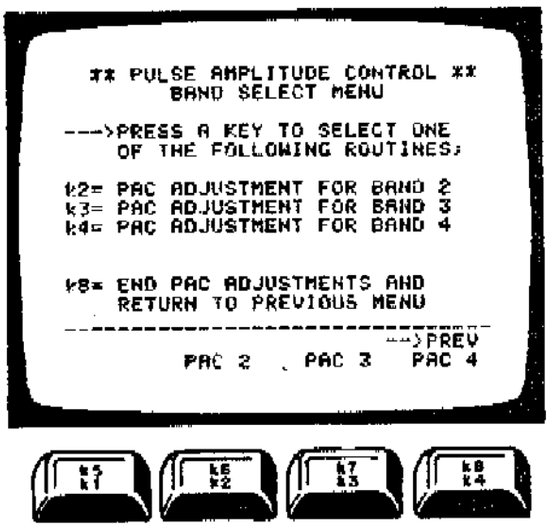


Figure 5-54. Pulse Amplitude Control Band Select Menu

The user can then select Bands 2, 3 or 4 PAC adjustment. The adjustment procedure for each band is identical, therefore the following discussion for Band 2 applies to all bands.

### Band 2 Adjustment

The user then selects [k2], PAC 2, for the Band 2 adjustment. Keys [k3] and [k4] are selected for Band 3 and Band 4 PAC adjustments, respectively. The following PAC Adjustment Menu will then be displayed.



www.valuetronics.com

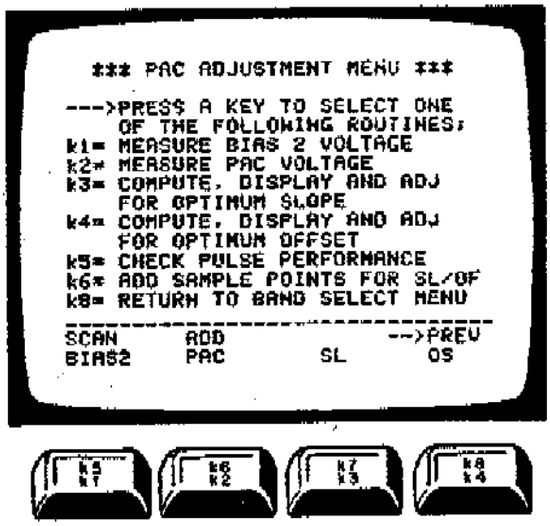


**Figure 5-55. PAC Adjustment Menu**

### BIAS 2

The user then selects [k1], BIAS 2. This routine will first set the Signal Generator to the highest frequency in the band (example 12.3 GHz for Band 2). Next it will measure and store the YTM Bias 2 voltage at two different output level vernier settings, −10 dBm and +8 dBm. These two Bias 2 voltage levels will be used later to calculate and plot the optimum settings for the PAC voltage slope and offset adjustments.

### PAC

The user then selects [k2], PAC. The controller will then set the Signal Generator to the PULSE NORM mode and the user will view the detected pulse modulated signal on the oscilloscope. The user then adjusts the PAC voltage using either B2 OF or B2 SL pots to obtain the optimum pulse shape. The pulse shape should be as flat as possible with minimum overshoot and rise time. The user can observe the PAC voltage change on the DVM while adjusting OF or SL pots.

The PAC voltage is adjusted initially at one frequency for two power level settings (for example, 12.3 GHz at −10 dBm and +8 dBm). The optimum PAC voltage found by the user for these two points is then measured and stored by the controller when the 'CONT' key is pressed.

The controller then uses these two PAC voltages to compute the optimum slope and offset settings for all frequency and output levels. The user will then be guided to these desired settings in the SL, [k3] and OS, [k4] routines. This will result in the most optimum PAC voltages providing the best possible pulse shape, at all instrument sampled frequency and output levels.



www.valuetronics.com

### SL

The user then selects [k3], SL. The controller switches the instrument between two output levels continuously and measures the PAC voltage at each level. It will then compute the real-time slope and display the slope error from the optimum computed slope. To observe the slope error, the user views the DVM and notes the reading during the time that the DVM is in "External Trigger Mode". All other readings must be ignored. The reading displayed will be a dimensionless number representing the slope error. The slope pot for that band is then adjusted for 0.00 ±0.005 on the DVM. If the error is negative, turn the pot clockwise to compensate. If the error is positive, turn the pot counterclockwise.

### OS

The user then selects [k4], OS. Again the DVM will continuously cycle and switch between internal and external trigger. Observe the reading during the DVM "External Trigger Mode" and adjust the OS pot for 0.00 ±0.001.

### SCAN

The user must now check the adjustment at several frequencies and power levels. To do this the user can select [k5], SCAN. When [k5], SCAN, is selected the Pulse Scan Menu will be displayed. See figure 5-56.

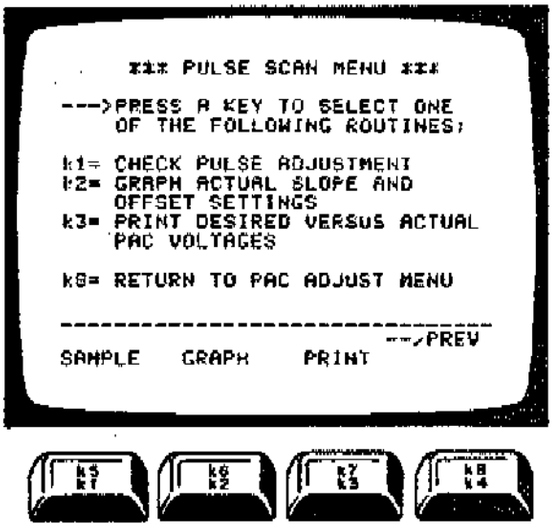


Figure 5-56. Pulse Scan Menu

### SAMPLE

The user should select [k1], SAMPLE, at this time. Sample is used to check selected frequency points. The controller will set the Signal Generator to various frequencies and power levels as the user checks for excessive overshoot and rise times.



www.valuetronics.com

### GRAPH and PRINT Routines

Graph, [k2] and Print, [k3] can optionally be selected by the user to print actual data results of the adjustment. GRAPH prints a graph of Vbias2 versus Vpac. PRINT is used to print the desired versus actual PAC voltages. Examples of both printouts are shown below. See figures 5-57 and 5-58.

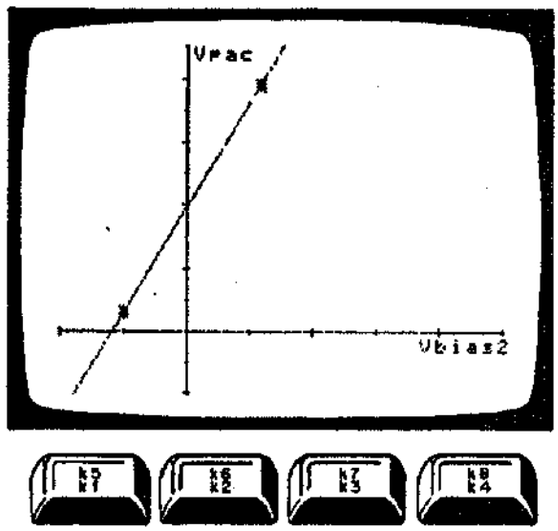


Figure 5-57. Graph Routine

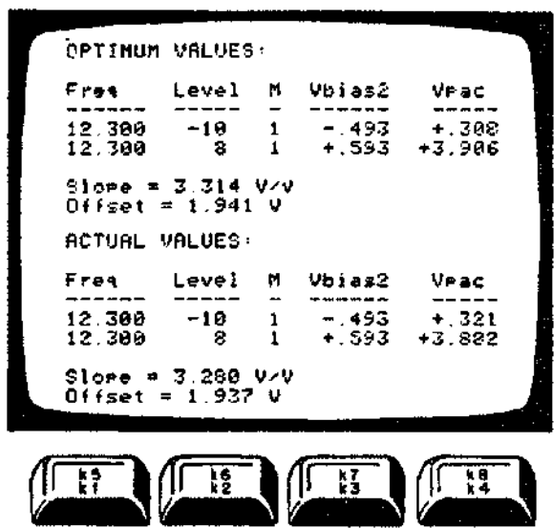


Figure 5-58. Print Routine

Once the user is satisfied with the adjustment of the sampled points, it is then necessary to return the Signal Generator to local operation by pressing the LOCAL key and check all frequencies and power levels in Band 2. If points are found out of specification press [k8],



www.valuetronics.com

PREV and refer to ADD function, [k6] below. If all points in Band 2 are within specification then press [k8], PREV twice to return to the PAC Band Select Menu.

**Note**

Care should be taken when checking performance to the instrument specification with this test setup. High overshoot and ringing can be caused by SWR reflections in the test system. If this occurs, add additional attenuator pads to the output of the detector before the amplifier. This may alleviate problems.

### ADD FUNCTION

The add function is selected if the user finds one or several frequencies or power levels that are out of specification while checking overall instrument pulse performance. By selecting [k6], ADD, compromises in the optimum slope and offset adjustment settings can be made. The user will first enter the frequencies where out of spec performance was found. Bias 2 and PAC voltage data will then be entered for the new sampled points. The controller will then recompute the optimum slope and offset, taking into consideration all sampled data points. The PAC Adjustment Menu will then be displayed. The user then readjusts the recommended points using SL and OS key functions.The SCAN function is then used again to observe the performance of all sampled points. This iterative procedure is continued until all frequency and output level points are within specified performance. Normally this will be achieved in one iteration of the procedure.

**Equipment**

| | |
|---|---|
| Oscilloscope | HP 1980B |
| Pulse Generator | HP 8013B |
| Preamplifier | HP 8447F |
| Crystal Detector | HP 8473C |
| HP-IB Controller with Optional ROM | HP 85B/00085-15005/ 00085-15002/00085-15004 |
| Test Cassette | HP 11726-10004 |
| Attenuator, Step | HP 355D |

**Procedure**

1. Set the Signal Generator's HP-IB address to 19.
2. Connect the equipment as shown in figure 5-59.



www.valuetronics.com

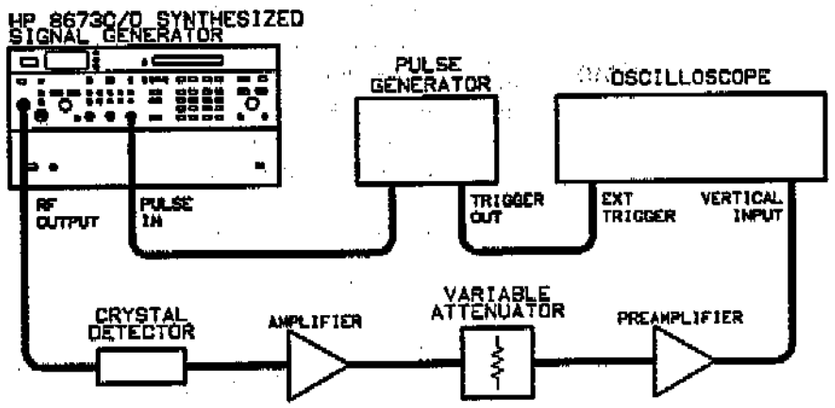


**Figure 5-59. Pulse Amplitude Control Adjustment Test Setup**

3. Load the test program "EXEC" if the Main Menu is not presently displayed. Instructions can be found in the paragraph titled "Automated Adjustment Procedures" in this section.
4. After the "EXEC" program is loaded and the Main Menu is displayed, press (k4) to run the "Pulse" adjustment.



www.valuetronics.com

Table 6-3. Replaceable Parts

| Reference Designation | HP Part Number | C D | Qty | Description | Mfr Code | Mfr Part Number |
|---|---|---|---|---|---|---|
| A3MP31 | 3050-0010 | 2 | | WASHER-FL MTLC NO. 6 .147-IN-ID | 28480 | 3050-0010 |
| A3MP32 | 2360-0115 | 4 | | SCREW-MACH 6-32 .312-IN-LG PAN-HD-POZI | 00000 | ORDER BY DESCRIPTION |
| A3MP33 | | | | NOT ASSIGNED | | |
| A3MP34 | 6960-0001 | 3 | 1 | PLUG-HOLE DOME-HD FOR .375-D-HOLE STL | 28480 | 6960-0001 |
| A3MP35 | 2360-0197 | 2 | | SCREW-MACH 6-32 .375-IN-LG PAN-HD-POZI | 28480 | 2360-0197 |
| A3MP36 | 2360-0219 | 9 | 2 | SCREW-MACH 6-32 1.375-IN-LG PAN-HD-POZI | 00000 | ORDER BY DESCRIPTION |
| A3MP37 | | | | NOT ASSIGNED | | |
| A3MP38 | 2510-0192 | 6 | 12 | SCREW-MACH 8-32 .25-IN-LG 100 DEG | 00000 | ORDER BY DESCRIPTION |
| A3MP39 | 2510-0195 | 9 | 8 | SCREW-MACH 8-32 .375-IN-LG 100 DEG | 28480 | 2510-0195 |
| A3MP40 | 2580-0002 | 4 | | NUT-HEX-DBL-CHAM 8-32-THD .085-IN-THK | 28480 | 2580-0002 |
| A3MP41 | 2680-0129 | 8 | 8 | SCREW-MACH 10-32 .312-IN-LG PAN-HD-POZI | 00000 | ORDER BY DESCRIPTION |
| A3MP42 | 2950-0035 | 8 | 1 | NUT-HEX-DBL-CHAM 15/32-32-THD | 00000 | ORDER BY DESCRIPTION |
| A3MP43 | 5001-0432 | 1 | 1 | GUSSET, SIDE | 28480 | 5001-0432 |
| A3MP44 | 5020-8803 | 6 | 1 | FRAME-FRONT | 28480 | 5020-8803 |
| A3MP45 | 5020-8883 | 2 | 1 | STRUT CORNER | 28480 | 5020-8883 |
| A3MP46 | 08673-00013 | 0 | 1 | CHASSIS M/F | 28480 | 08673-00013 |
| A3MP47 | | | | NOT ASSIGNED | | |
| A3MP48 | | | | NOT ASSIGNED | | |
| A3MP49 | 08673-00015 | 2 | 1 | REAR PANEL M/F | 28480 | 08673-00015 |
| A3MP50 | 08673-00023 | 2 | 1 | CHASSIS CONT MOD | 28480 | 08673-00023 |
| A3MP51 | 08673-00048 | 9 | 1 | SUPPORT, RECT. BD. BOARD | 28480 | 08673-00048 |
| A3MP52 | 08673-20036 | 9 | 1 | HEAT SINK "A" | 28480 | 08673-20036 |
| A3MP53 | 08673-20037 | 0 | 1 | HEAT SINK "B" | 28480 | 08673-20037 |
| A3MP54 | 08673-20042 | 7 | 1 | HEAT SINK | 28480 | 08673-20042 |
| A3MP55 | 08673-20067 | 6 | 1 | FRAME SUPPORT | 28480 | 08673-20067 |
| A3MP56 | 86701-00016 | 2 | 1 | SUPPORT-CAPACITOR | 28480 | 86701-00016 |
| A3MP57 | 86701-00017 | 3 | 1 | DISK- FAN SHIELD | 28480 | 86701-00017 |
| A3MP58 | 86701-00007 | 1 | 1 | GUARD FAN | 28480 | 86701-00007 |
| A3MP59 | 2200-0115 | 6 | 1 | SCREW-MACH 4-40 .75-IN-LG PAN-HD-POZI | 00000 | ORDER BY DESCRIPTION |
| A3MP60-A3MP65 | | | | NOT ASSIGNED | | |
| A3MP66 | 86701-00038 | 8 | 1 | STRUT ASSEMBLY (LEFT) | 28480 | 86701-00038 |
| A3MP67 | 86701-00039 | 9 | 1 | STRUT ASSEMBLY (RIGHT) | 28480 | 86701-00039 |
| A3MP68 | 86701-00042 | 4 | 1 | SUPPORT-MOUNT (BOTTOM) | 28480 | 86701-00042 |
| A3MP69 | 86701-00043 | 5 | 1 | SUPPORT-MOUNT (TOP) | 28480 | 86701-00043 |
| A3MP70 | 86701-00044 | 6 | 2 | SNUBBER | 28480 | 86701-00044 |
| A3MP71 | 86701-20002 | 8 | 1 | COOLING FAN | 28480 | 86701-20002 |
| A3MP72 | | | | NOT ASSIGNED | | |
| A3MP73 | | | | NOT ASSIGNED | | |
| A3MP74 | 86701-20005 | 1 | 1 | GUIDE-P.C. BOARD (REAR) | 28480 | 86701-20005 |
| A3MP75 | 86701-20006 | 2 | 1 | GUIDE-P.C. BOARD (FRONT) | 28480 | 86701-20006 |
| A3MP76 | 86701-20007 | 3 | 1 | FRAME-MOD (REAR) | 28480 | 86701-20007 |
| A3MP77 | | | | NOT ASSIGNED | | |
| A3MP78 | 1200-0147 | 3 | 16 | INSULATOR-FLG-BSHG NYLON | 28480 | 1200-0147 |
| A3MP79-A3MP82 | | | | NOT ASSIGNED | | |
| A3MP83 | 1400-0249 | 0 | | CABLE TIE .062-.625-DIA .091-WD NYL | 06383 | PLT1M-8 |
| A3MP84 | 2200-0103 | 2 | | SCREW-MACH 4-40 .25-IN-LG PAN-HD-POZI | 28480 | 2200-0103 |
| A3MP85 | 2200-0105 | 4 | | SCREW-MACH 4-40 .312-IN-LG PAN-HD-POZI | 00000 | ORDER BY DESCRIPTION |
| A3MP86 | 2200-0138 | 3 | | SCREW-MACH 4-40 .188-IN-LG 100 DEG | 28480 | 2200-0138 |
| A3MP87 | 2200-0149 | 6 | | SCREW-MACH 4-40 .625-IN-LG PAN-HD-POZI | 00000 | ORDER BY DESCRIPTION |
| A3MP88 | 2200-0153 | 2 | 16 | SCREW-MACH 4-40 .875-IN-LG PAN-HD-POZI | 00000 | ORDER BY DESCRIPTION |
| A3MP89 | 2360-0207 | 5 | 9 | SCREW-MACH 6-32 .875-IN-LG PAN-HD-POZI | 00000 | ORDER BY DESCRIPTION |
| A3MP90 | 6960-0016 | 0 | | PLUG-HOLE TR-HD FOR .125-D-HOLE NYL | 28480 | 6960-0016 |
| A3MP91 | 5021-3208 | 7 | | HOUSING-REF BLK | 28480 | 5021-3208 |
| A3MP92 | | | | NOT ASSIGNED | | |
| A3MP93 | 08673-00014 | 1 | 1 | DIVIDER CENTER | 28480 | 08673-00014 |
| A3MP94 | | | | NOT ASSIGNED | | |
| A3MP95 | | | | NOT ASSIGNED | | |
| A3MP96 | 86701-00024 | 2 | | SCOOP AIR | 28480 | 86701-00024 |
| A3MP97 | 86701-00028 | 6 | 1 | SPRING FLAT | 28480 | 86701-00028 |
| A3MP98 | 86701-00029 | 7 | | BAFFLE AIR TOP | 28480 | 86701-00029 |
| A3MP99 | 86701-00030 | 0 | | BAFFLE AIR BOTTOM | 28480 | 86701-00030 |
| A3MP100 | 86701-00044 | 6 | | SNUBBER | 28480 | 86701-00044 |
| A3MP101-A3MP104 | | | | NOT ASSIGNED | | |

A3

See introduction to this section for ordering information
*Indicates factory selected value
†Backdating information in Section VII



www.valuetronics.com

8. Set the oscilloscope's trigger to channel 2 and set channel 2 vertical input for dc coupling. Adjust the oscilloscope for the display shown in figure 5-61.

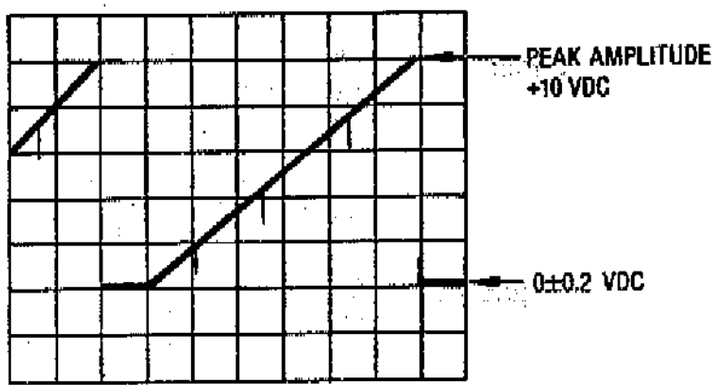


**Figure 5-61. Sweep Out Waveform**

9. Set SWP (A2A7R34) for a +10V ramp peak-to-peak. Verify that the ramp contains no discontinuities.
10. Connect the rear panel BLANKING/MARKER BNC connector to channel 1 of the oscilloscope, leaving the trigger set to channel 2.
11. Using the GND on channel 1 of the oscilloscope, set a reference for normal output level (see figure 5-62).

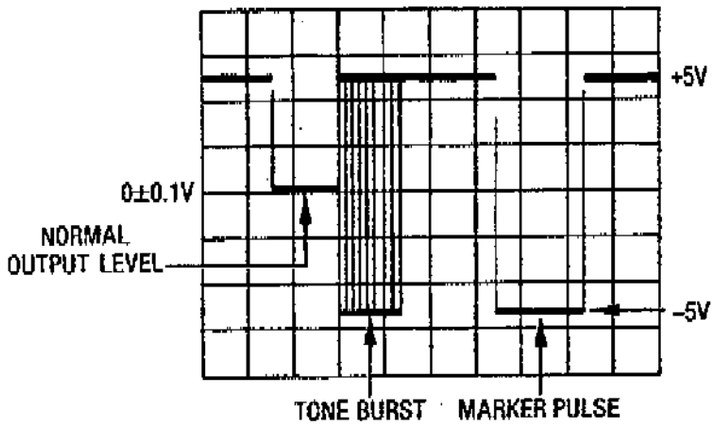


**Figure 5-62. Marker Waveform**

12. Switch channel 1 to dc coupling.
13. Adjust MKR (A2A7R50) for a marker pulse −5V below the reference.



www.valuetronics.com

**Note**

This procedure applies only to instruments with serial number prefixes 2552A, 2634A, and above. These are the only instruments that have the adjustable 0.5 V/GHz output.

14. Set the FREQ REF switch A2A7S2 to the 0.5 position.
15. Remove the MPU test board and jumper.
16. Connect the rear panel FREQ REF connector to channel 1 of the oscilloscope. Switch the oscilloscope to internal trigger.
17. On the Signal Generator, press [RCL] and [0] and set the frequency to 26 GHz.
18. Adjust FREF A2A7R59 for an oscilloscope indication of +13.0 Vdc.



www.valuetronics.com

# SECTION VI
# REPLACEABLE PARTS

## 6-1. INTRODUCTION

This section contains information for ordering parts. Table 6-1 lists part numbers for restored assemblies. Table 6-2 lists abbreviations used in the parts list and throughout the manual. Table 6-3 lists all replaceable parts in reference designation order. Table 6-4 contains the names and addresses that correspond to the manufacturer's code numbers.

## 6-2. RESTORED ASSEMBLIES

Table 6-1 lists restored assemblies for the instrument that may be purchased on an exchange basis, thus affording a considerable cost saving. Factory-repaired and tested assemblies are available only on a trade-in basis, therefore, the defective assemblies must be returned for credit. For this reason, assemblies required for spare parts stock must be ordered by the new assembly part number.

## 6-3. ABBREVIATIONS

Table 6-2 lists abbreviations used in the parts list, schematics, and throughout the manual. Standard abbreviations may be in upper or lower-case letters. However, the replaceable parts list is a computer printout using only upper-case letters. Thus, abbreviations in the replaceable parts list are in upper-case letters only.

## 6-4. REPLACEABLE PARTS LIST

Table 6-3 is the list of replaceable parts and is organized as follows:

a. Electrical assemblies and their components in alphanumeric order by reference designation.

b. Chassis-mounted ,or non-assembly, parts in alphanumeric order by reference designation.

The information given for each part consists of the following:

a. Reference designation

b. Hewlett-Packard part number

c. Part number check digit (CD)

d. Total quantity (Qty) used in the instrument

e. Part description

f. Five-digit code that represents a typical manufacturer

g. Manufacturer's part number

The total quantity for each part is given only once, at the first appearance of the part number in the list. Quantities for parts on optional assemblies are totalled by assembly and not integrated into the standard list.

## 6-5. Factory Selected Parts (*)

Parts marked with an asterisk are factory selected parts. (That is, they are selected in test.) The value shown in the parts list is a nominal value only. Refer to Table 5-1, Factory Selected Components, for instructions on selecting the actual value for replacement.

## 6-6. Parts List Backdating (†)

Parts marked with daggers are different in some instruments. The replaceable parts list applies directly to only one instrument configuration. This configuration is identified by a serial number prefix described on the title page of the manual. Refer to Section VII for parts information on instruments with lower prefixes.

## 6-7. Parts List Updating

Instruments made after the publication of this manual may have different parts than ones shown in the replaceable parts list. These instruments will have serial number prefixes higher than the one described on the title page. Refer to the MANUAL CHANGES supplement that accompanies these instruments for parts information. The MANUAL CHANGES supplement also contains instructions for correcting errors in the replaceable parts list.

## 6-8. ORDERING INFORMATION

When ordering a part listed in the replaceable parts list, include the Hewlett-Packard part number, the check digit, and the quantity required.



www.valuetronics.com

## ORDERING INFORMATION (cont'd)

Address the order to the nearest Hewlett-Packard office. The check digit will ensure accurate and timely processing of your order.

**NOTE**

*Within the USA, it is more expedient to order directly from the HP Parts Center in Mountain View, California. Ask your nearest HP office for information and forms for the "Direct Mail Order System."*

## 6-9. PARTS IDENTIFICATION

Most mechanical parts are identified in Figures 6-1 through 6-23. These figures are located at the end of the replaceable parts list. Most electrical parts are shown in figures associated with the schematic diagrams in Section VIII.

To identify a part not shown in Sections VI, VII, or VIII, or in the MANUAL CHANGES supplement, contact the parts identification section of your nearest Hewlett-Packard service center. Be prepared to identify the instrument by model and serial number, and to describe the part by type, function, and location within the instrument.

## 6-10. RECOMMENDED SPARES LIST

Stocking spare parts for an instrument is often done to ensure quick return to service after a malfunction occurs. Hewlett-Packard prepares a "Recommended Spares" list for this instrument. The contents of the list are based on failure reports and repair data. Quantities given are for one year of parts support. A complimentary copy of the "Recommended Spares" list may be requested from your nearest Hewlett-Packard office.

When stocking parts to support more than one Signal Generator or a variety of Hewlett-Packard instruments, it may be more economical to work from one consolidated list rather than simply adding together stocking quantities from the individual instrument lists. Hewlett-Packard will prepare consolidated "Recommended Spares" lists for any number or combination of instruments. Contact your nearest Hewlett-Packard office for details.

**Table 6-1. Part Numbers for Exchange Assemblies**

| Reference Designation | Description | Part Number* | |
|---|---|---|---|
| | | Exchange Assy | New Assy |
| A1A9 | Pre Amp Assembly | 08673-67201 | 08673-67001 |
| A1A10 | YTM Assembly | 08673-67203 | 08673-67003 |
| A10A11 | Power Amp | 08673-67204 | 08673-67004 |
| A1AT1 | Programmable Attenuator Assembly | 08673-60096 | 08673-60043 |
| A3A1A4 | M/N VCO Assembly | 86701-60071 | 86701-60065 |

*When ordering extra assemblies for spare parts stock, use new assembly part number only. Exchange orders require return of the defective part.



www.valuetronics.com

## Table 6-2. Reference Designations and Abbreviations (1 of 2)

### REFERENCE DESIGNATIONS

A . . . . . assembly
AT . . attenuator; isolator; termination
B . . . . . fan; motor
BT . . . . . battery
C . . . . . capacitor
CP . . . . . coupler
CR . . . . . diode; diode thyristor; varactor
DC . . . directional coupler
DL . . . . . delay line
DS . . . . . annunciator; signaling device (audible or visual); lamp; LED
E . . . . . miscellaneous electrical part
F . . . . . fuse
FL . . . . . filter
H . . . . . hardware
HY . . . . . circulator
J . . . electrical connector (stationary portion); jack
K . . . . . relay
L . . . . . coil; inductor
M . . . . . meter
MP . . . . . miscellaneous mechanical part
P . . . electrical connector (movable portion); plug
Q . . . . . transistor; SCR; triode thyristor
R . . . . . resistor
RT . . . . . thermistor
S . . . . . switch
T . . . . . transformer
TB . . . . . terminal board
TC . . . . . thermocouple
TP . . . . . test point
U . . . . . integrated circuit; microcircuit
V . . . . . electron tube
VR . . . . voltage regulator; breakdown diode
W . . . . cable; transmission path; wire
X . . . . . socket
Y . . . . crystal unit (piezoelectric or quartz)
Z . . . . tuned cavity; tuned circuit

### ABBREVIATIONS

A . . . . . ampere
ac . . . . alternating current
ACCESS . . . . . accessory
ADJ . . . . . adjustment
A/D . . . . analog-to-digital
AF . . . . . audio frequency
AFC . . . . . automatic frequency control
AGC . . . . . automatic gain control
AL . . . . . aluminum
ALC . . . . . automatic level control
AM . . . amplitude modulation
AMPL . . . . . amplifier
APC . . . . automatic phase control
ASSY . . . . . assembly
AUX . . . . . auxiliary
avg . . . . . average
AWG . . . . American wire gauge
BAL . . . . . balance
BCD . . . . . binary coded decimal
BD . . . . . board
BE CU . . . . . beryllium copper
BFO . . . . . beat frequency oscillator
BH . . . . . binder head
BKDN . . . . . breakdown
BP . . . . . bandpass
BPF . . . . . bandpass filter
BRS . . . . . brass
BWO . . . . . backward-wave oscillator
CAL . . . . . calibrate
ccw . . counter-clockwise
CER . . . . . ceramic
CHAN . . . . . channel
cm . . . . . centimeter
CMO . . cabinet mount only
COAX . . . . . coaxial
COEF . . . . . coefficient
COM . . . . . common
COMP . . . . . composition
COMPL . . . . . complete
CONN . . . . . connector
CP . . . . . cadmium plate
CRT . . . cathode-ray tube
CTL . . . . complementary transistor logic
CW . . . . . continuous wave
cw . . . . . clockwise
cm . . . . . centimeter
D/A . . . . digital-to-analog
dB . . . . . decibel
dBm . . . . decibel referred to 1 mW
dc . . . . . direct current
deg . . degree (temperature interval or difference)
° . . . . . degree (plane angle)
°C . . . . . degree Celsius (centigrade)
°F . . . . degree Fahrenheit
°K . . . . . degree Kelvin
DEPC . . deposited carbon
DET . . . . . detector
diam . . . . . diameter
DIA . . . diameter (used in parts list)
DIFF AMPL . . differential amplifier
div . . . . . division
DPDT . . . . . double-pole, double-throw
DR . . . . . drive
DSB . . . . double sideband
DTL . . . . diode transistor logic
DVM . . . digital voltmeter
ECL . . . . emitter coupled logic
EMF . . electromotive force
EDP . . . . . electronic data processing
ELECT . . . . . electrolytic
ENCAP . . . . encapsulated
EXT . . . . . external
F . . . . . farad
FET . . . . . field-effect transistor
F/F . . . . . flip-flop
FH . . . . . flat head
FIL H . . . . . fillister head
FM . . frequency modulation
FP . . . . . front panel
FREQ . . . . . frequency
FXD . . . . . fixed
g . . . . . gram
GE . . . . . germanium
GHz . . . . . gigahertz
GL . . . . . glass
GRD . . . . . ground(ed)
H . . . . . henry
h . . . . . hour
HET . . . . . heterodyne
HEX . . . . . hexagonal
HD . . . . . head
HDW . . . . . hardware
HF . . . . . high frequency
HG . . . . . mercury
HI . . . . . high
HP . . . . . Hewlett-Packard
HPF . . . . . high pass filter
HR . . . . . hour (used in parts list)
HV . . . . . high voltage
Hz . . . . . Hertz
IC . . . . integrated circuit
ID . . . . . inside diameter
IF . . . . . intermediate frequency
IMPG . . . . . impregnated
in . . . . . inch
INCD . . . . . incandescent
INCL . . . . . include(s)
INP . . . . . input
INS . . . . . insulation
INT . . . . . internal
kg . . . . . kilogram
kHz . . . . . kilohertz
kΩ . . . . . kilohm
kV . . . . . kilovolt
lb . . . . . pound
LC . . . . . inductance-capacitance
LED . . light-emitting diode
LF . . . . . low frequency
LG . . . . . long
LH . . . . . left hand
LIM . . . . . limit
LIN . . . linear taper (used in parts list)
lin . . . . . linear
LK WASH . . . lock washer
LO . . . low; local oscillator
LOG . . . . logarithmic taper (used in parts list)
log . . . . . logrithm(ic)
LPF . . . . . low pass filter
LV . . . . . low voltage
m . . . . . meter (distance)
mA . . . . . milliampere
MAX . . . . . maximum
MΩ . . . . . megohm
MEG . . . . meg ($10^6$) (used in parts list)
MET FLM . . . . metal film
MET OX . . metallic oxide
MF . . . medium frequency; microfarad (used in parts list)
MFR . . . . . manufacturer
mg . . . . . milligram
MHz . . . . . megahertz
mH . . . . . millihenry
mho . . . . . mho
MIN . . . . . minimum
min . . . . . minute (time)
′ . . . . . minute (plane angle)
MINAT . . . . . miniature
mm . . . . . millimeter

**NOTE**

**All abbreviations in the parts list will be in upper-case.**



www.valuetronics.com

## Table 6-2. Reference Designations and Abbreviations (2 of 2)

MOD . . . . . modulator
MOM . . . . . momentary
MOS . . . . . metal-oxide semiconductor
ms . . . . . millisecond
MTG . . . . . mounting
MTR . . . meter (indicating device)
mV . . . . . millivolt
mVac . . . . . millivolt, ac
mVdc . . . . . millivolt, dc
mVpk . . . . millivolt, peak
mVp-p . . . millivolt, peak-to-peak
mVrms . . . . millivolt, rms
mW . . . . . milliwatt
MUX . . . . . multiplex
MY . . . . . mylar
μA . . . . . microampere
μF . . . . . microfarad
μH . . . . . microhenry
μmho . . . . . micromho
μs . . . . . microsecond
μV . . . . . microvolt
μVac . . . . . microvolt, ac
μVdc . . . . microvolt, dc
μVpk . . . microvolt, peak
μVp-p . . . microvolt, peak-to-peak
μVrms . . . . microvolt, rms
μW . . . . . microwatt
nA . . . . . nanoampere
NC . . . . . no connection
N/C . . . . normally closed
NE . . . . . neon
NEG . . . . . negative
nF . . . . . nanofarad
NI PL . . . . . nickel plate
N/O . . . . . normally open
NOM . . . . . nominal
NORM . . . . . normal
NPN . . . negative-positive-negative
NPO . . . . negative-positive zero (zero temperature coefficient)
NRFR . . not recommended for field replacement
NSR . . . . . not separately replaceable
ns . . . . . nanosecond
nW . . . . . nanowatt
OBD . . . order by description
OD . . . . . outside diameter
OH . . . . . oval head
OP AMPL . . . operational amplifier
OPT . . . . . option
OSC . . . . . oscillator
OX . . . . . oxide
oz . . . . . ounce
Ω . . . . . ohm
P . . . . peak (used in parts list)
PAM . . . . pulse-amplitude modulation
PC . . . . . printed circuit
PCM . . pulse-code modulation; pulse-count modulation
PDM . . . . . pulse-duration modulation
pF . . . . . picofarad
PH BRZ phosphor bronze
PHL . . . . . Phillips
PIN . . . positive-intrinsic-negative
PIV . . . . . peak inverse voltage
pk . . . . . peak
PL . . . . . phase lock
PLO . . . . . phase lock oscillator
PM . . . . phase modulation
PNP . . . positive-negative-positive
P/O . . . . . part of
POLY . . . . . polystyrene
PORC . . . . . porcelain
POS . . positive; position(s) (used in parts list)
POSN . . . . . position
POT . . . . . potentiometer
p-p . . . . . peak-to-peak
PP . . . peak-to-peak (used in parts list)
PPM . . . . . pulse-position modulation
PREAMPL . . . preamplifier
PRF . . . . pulse-repetition frequency
PRR . . . . pulse repetition rate
ps . . . . . picosecond
PT . . . . . point
PTM . . . . . pulse-time modulation
PWM . . . . . pulse-width modulation
PWV . . . . . peak working voltage
RC . . . . . resistance-capacitance
RECT . . . . . rectifier
REF . . . . . reference
REG . . . . . regulated
REPL . . . . . replaceable
RF . . . . . radio frequency
RFI . . . . radio frequency interference
RH . . . . round head; right hand
RLC . . . . . resistance-inductance-capacitance
RMO . . . rack mount only
rms . . . . root-mean-square
RND . . . . . round
ROM . . read-only memory
R&P . . . . . rack and panel
RWV . . . reverse working voltage
S . . . scattering parameter
s . . . . . second (time)
. . . " . second (plane angle)
S-B . . . . slow-blow (fuse) (used in parts list)
SCR . . . silicon controlled rectifier; screw
SE . . . . . selenium
SECT . . . . . sections
SEMICON . . . . . semiconductor
SHF . . . . . superhigh frequency
SI . . . . . silicon
SIL . . . . . silver
SL . . . . . slide
SNR . . signal-to-noise ratio
SPDT . . . . . single-pole, double-throw
SPG . . . . . spring
SR . . . . . split ring
SPST . . . . . single-pole, single-throw
SSB . . . . . single sideband
SST . . . . . stainless steel
STL . . . . . steel
SQ . . . . . square
SWR . . standing-wave ratio
SYNC . . . . . synchronize
T . . timed (slow-blow fuse)
TA . . . . . tantalum
TC . . . . . temperature compensating
TD . . . . . time delay
TERM . . . . . terminal
TFT . . thin-film transistor
TGL . . . . . toggle
THD . . . . . thread
THRU . . . . . through
TI . . . . . titanium
TOL . . . . . tolerance
TRIM . . . . . trimmer
TSTR . . . . . transistor
TTL . . transistor-transistor logic
TV . . . . . television
TVI television interference
TWT . . traveling wave tube
U . . . . . micro ($10^{-6}$) (used in parts list)
UF . . . microfarad (used in parts list)
UHF . . ultrahigh frequency
UNREG . . . . unregulated
V . . . . . volt
VA . . . . . voltampere
Vac . . . . . volts, ac
VAR . . . . . variable
VCO . . . voltage-controlled oscillator
Vdc . . . . . volts, dc
VDCW . . volts, dc, working (used in parts list)
V(F) . . . . . volts, filtered
VFO . . variable-frequency oscillator
VHF . . . . . very-high frequency
Vpk . . . . . volts, peak
Vp-p . . volts, peak-to-peak
Vrms . . . . . volts, rms
VSWR . . . voltage standing wave ratio
VTO . . . . . voltage-tuned oscillator
VTVM . . . . vacuum-tube voltmeter
V(X) . . . . . volts, switched
W . . . . . watt
W/ . . . . . with
WIV . . . working inverse voltage
WW . . . . . wirewound
W/O . . . . . without
YIG . . yttrium-iron-garnet
$Z_o$ . . . . . characteristic impedance

**NOTE**

All abbreviations in the parts list will be in upper-case.

## MULTIPLIERS

| Abbreviation | Prefix | Multiple |
|---|---|---|
| T | tera | $10^{12}$ |
| G | giga | $10^{9}$ |
| M | mega | $10^{6}$ |
| k | kilo | $10^{3}$ |
| da | deka | $10$ |
| d | deci | $10^{-1}$ |
| c | centi | $10^{-2}$ |
| m | milli | $10^{-3}$ |
| μ | micro | $10^{-6}$ |
| n | nano | $10^{-9}$ |
| p | pico | $10^{-12}$ |
| f | femto | $10^{-15}$ |
| a | atto | $10^{-18}$ |



www.valuetronics.com

A1

## Table 6-3. Replaceable Parts

| Reference Designation | HP Part Number | C D | Qty | Description | Mfr Code | Mfr Part Number |
|---|---|---|---|---|---|---|
| A1A1 | 08673-60104 | 6 | 1 | ATTENUATOR DRIVER BOARD ASSEMBLY | 28480 | 08673-60104 |
| A1A1C1 | 0180-0291 | 3 | 18 | CAPACITOR-FXD 1UF+-10% 35VDC TA | 56289 | 150D105X9035A2 |
| A1A1C2 | 0180-0197 | 8 | 15 | CAPACITOR-FXD 2.2UF+-10% 20VDC TA | 56289 | 150D225X9020A2 |
| A1A1C3 | 0160-0572 | 1 | 2 | CAPACITOR-FXD 2200PF +-20% 100VDC CER | 28480 | 0160-0572 |
| A1A1C4 | 0160-0572 | 1 | | CAPACITOR-FXD 2200PF +-20% 100VDC CER | 28480 | 0160-0572 |
| A1A1C5 | 0160-0576 | 5 | 51 | CAPACITOR-FXD .1UF +-20% 50VDC CER | 28480 | 0160-0576 |
| A1A1C6 | 0160-0576 | 5 | | CAPACITOR-FXD .1UF +-20% 50VDC CER | 28480 | 0160-0576 |
| A1A1CR1 | | | | NOT ASSIGNED | | |
| A1A1CR2 | 1901-0050 | 3 | 49 | DIODE-SWITCHING 80V 200MA 2NS DO-35 | 28480 | 1901-0050 |
| A1A1CR3 | 1901-0050 | 3 | | DIODE-SWITCHING 80V 200MA 2NS DO-35 | 28480 | 1901-0050 |
| A1A1CR4 | 1901-0050 | 3 | | DIODE-SWITCHING 80V 200MA 2NS DO-35 | 28480 | 1901-0050 |
| A1A1CR5 | 1901-0050 | 3 | | DIODE-SWITCHING 80V 200MA 2NS DO-35 | 28480 | 1901-0050 |
| A1A1CR6 | 1901-0050 | 3 | | DIODE-SWITCHING 80V 200MA 2NS DO-35 | 28480 | 1901-0050 |
| A1A1CR7 | 1901-0050 | 3 | | DIODE-SWITCHING 80V 200MA 2NS DO-35 | 28480 | 1901-0050 |
| A1A1CR8 | 1901-0050 | 3 | | DIODE-SWITCHING 80V 200MA 2NS DO-35 | 28480 | 1901-0050 |
| A1A1CR9 | 1901-0050 | 3 | | DIODE-SWITCHING 80V 200MA 2NS DO-35 | 28480 | 1901-0050 |
| A1A1CR10 | 1901-0050 | 3 | | DIODE-SWITCHING 80V 200MA 2NS DO-35 | 28480 | 1901-0050 |
| A1A1CR11 | 1901-0050 | 3 | | DIODE-SWITCHING 80V 200MA 2NS DO-35 | 28480 | 1901-0050 |
| A1A1CR12 | 1901-0050 | 3 | | DIODE-SWITCHING 80V 200MA 2NS DO-35 | 28480 | 1901-0050 |
| A1A1CR13 | 1901-0050 | 3 | | DIODE-SWITCHING 80V 200MA 2NS DO-35 | 28480 | 1901-0050 |
| A1A1CR14 | 1901-0050 | 3 | | DIODE-SWITCHING 80V 200MA 2NS DO-35 | 28480 | 1901-0050 |
| A1A1CR15 | 1901-0050 | 3 | | DIODE-SWITCHING 80V 200MA 2NS DO-35 | 28480 | 1901-0050 |
| A1A1CR16 | 1901-0050 | 3 | | DIODE-SWITCHING 80V 200MA 2NS DO-35 | 28480 | 1901-0050 |
| A1A1CR17 | 1901-0050 | 3 | | DIODE-SWITCHING 80V 200MA 2NS DO-35 | 28480 | 1901-0050 |
| A1A1CR18 | 1901-0050 | 3 | | DIODE-SWITCHING 80V 200MA 2NS DO-35 | 28480 | 1901-0050 |
| A1A1CR19 | | | | NOT ASSIGNED | | |
| A1A1CR20 | 1901-0050 | 3 | | DIODE-SWITCHING 80V 200MA 2NS DO-35 | 28480 | 1901-0050 |
| A1A1CR21 | 1901-0050 | 3 | | DIODE-SWITCHING 80V 200MA 2NS DO-35 | 28480 | 1901-0050 |
| A1A1CR22 | 1901-0050 | 3 | | DIODE-SWITCHING 80V 200MA 2NS DO-35 | 28480 | 1901-0050 |
| A1A1CR23 | 1901-0050 | 3 | | DIODE-SWITCHING 80V 200MA 2NS DO-35 | 28480 | 1901-0050 |
| A1A1CR24 | 1901-0050 | 3 | | DIODE-SWITCHING 80V 200MA 2NS DO-35 | 28480 | 1901-0050 |
| A1A1CR25 | 1901-0050 | 3 | | DIODE-SWITCHING 80V 200MA 2NS DO-35 | 28480 | 1901-0050 |
| A1A1CR26 | 1901-0050 | 3 | | DIODE-SWITCHING 80V 200MA 2NS DO-35 | 28480 | 1901-0050 |
| A1A1CR27 | | | | NOT ASSIGNED | | |
| A1A1CR28 | | | | NOT ASSIGNED | | |
| A1A1CR29 | 1901-0050 | 3 | | DIODE-SWITCHING 80V 200MA 2NS DO-35 | 28480 | 1901-0050 |
| A1A1Q1 | | | | NOT ASSIGNED | | |
| A1A1Q2 | 1854-0810 | 2 | 30 | TRANSISTOR NPN SI PD=625MW FT=200MHZ | 28480 | 1854-0810 |
| A1A1R1 | 0698-3430 | 5 | 4 | RESISTOR 21.5 1% .125W F TC=0+-100 | 03888 | PME55-1/8-T0-21R5-F |
| A1A1R2 | 0698-3430 | 5 | | RESISTOR 21.5 1% .125W F TC=0+-100 | 03888 | PME55-1/8-T0-21R5-F |
| A1A1R3 | | | | NOT ASSIGNED | | |
| A1A1R4 | 0698-0083 | 8 | 28 | RESISTOR 1.96K 1% .125W F TC=0+-100 | 24546 | C4-1/8-T0-1961-F |
| A1A1R5 | 0757-0288 | 1 | 4 | RESISTOR 9.09K 1% .125W F TC=0+-100 | 19701 | MF4C1/8-T0-9091-F |
| A1A1R6 | 0757-0289 | 2 | 5 | RESISTOR 13.3K 1% .125W F TC=0+-100 | 19701 | MF4C1/8-T0-1332-F |
| A1A1U1 | 1820-0535 | 7 | 6 | IC DRVR TTL AND DUAL 2-INP | 01295 | SN75451BP |
| A1A1U2 | 1820-0535 | 7 | | IC DRVR TTL AND DUAL 2-INP | 01295 | SN75451BP |
| A1A1U3 | 1820-1445 | 0 | 9 | IC LCH TTL LS 4-BIT | 01295 | SN74LS375N |
| A1A1U4 | 1820-0535 | 7 | | IC DRVR TTL AND DUAL 2-INP | 01295 | SN75451BP |
| A1A1U5 | 1820-0535 | 7 | | IC DRVR TTL AND DUAL 2-INP | 01295 | SN75451BP |
| A1A1U6 | 1820-1445 | 0 | | IC LCH TTL LS 4-BIT | 01295 | SN74LS375N |
| A1A1U7 | 1820-0535 | 7 | | IC DRVR TTL AND DUAL 2-INP | 01295 | SN75451BP |
| A1A1U8 | 1820-0535 | 7 | | IC DRVR TTL AND DUAL 2-INP | 01295 | SN75451BP |
| A1A2 | 08673-60116 | 0 | 1 | DETECTOR MODULE ASSEMBLY | 28480 | 08673-60116 |
| A1A2C1 | 0160-4082 | 6 | 5 | CAPACITOR-FDTHRU 1000PF 20% 200V CER | 28480 | 0160-4082 |
| A1A2C2 | 0160-4082 | 6 | | CAPACITOR-FDTHRU 1000PF 20% 200V CER | 28480 | 0160-4082 |
| A1A2C3 | 0160-4082 | 6 | | CAPACITOR-FDTHRU 1000PF 20% 200V CER | 28480 | 0160-4082 |
| A1A2C4 | 0160-4082 | 6 | | CAPACITOR-FDTHRU 1000PF 20% 200V CER | 28480 | 0160-4082 |
| A1A2C5 | | | | NOT ASSIGNED | | |
| A1A2C6 | 0160-4083 | 7 | 3 | CAPACITOR-FDTHRU 10PF 10% 200V CER | 28480 | 0160-4083 |
| A1A2C7 | 0160-4082 | 6 | | CAPACITOR-FDTHRU 1000PF 20% 200V CER | 28480 | 0160-4082 |
| A1A2C8 | 0160-4083 | 7 | | CAPACITOR-FDTHRU 10PF 10% 200V CER | 28480 | 0160-4083 |
| A1A2C9 | 0160-4083 | 7 | | CAPACITOR-FDTHRU 10PF 10% 200V CER | 28480 | 0160-4083 |

See introduction to this section for ordering information
*Indicates factory selected value
†Backdating information in Section VII



www.valuetronics.com

A1

## Table 6-3. Replaceable Parts

| Reference Designation | HP Part Number | C D | Qty | Description | Mfr Code | Mfr Part Number |
|---|---|---|---|---|---|---|
| A1A2MP1 | 0360-0353 | 0 | 1 | BRACKET-RTANG .406-LG X .343-LG .312-WD | 28480 | 0360-0353 |
| A1A2MP2 | 0520-0127 | 6 | 22 | SCREW-MACH 2-56 .188-IN-LG PAN-HD-POZI | 00000 | ORDER BY DESCRIPTION |
| A1A2MP3 | 0520-0183 | 0 | 4 | SCREW-MACH 2-56 .188-IN-LG 82 DEG | 00000 | ORDER BY DESCRIPTION |
| A1A2MP4 | 2190-0045 | 8 | 32 | WASHER-LK HLCL NO. 2 .088-IN-ID | 28480 | 2190-0045 |
| A1A2MP5 | 2190-0124 | 4 | 1 | WASHER-LK INTL T NO. 10 .195-IN-ID | 28480 | 2190-0124 |
| A1A2MP6 | 2200-0103 | 2 | 7 | SCREW-MACH 4-40 .25-IN-LG PAN-HD-POZI | 28480 | 2200-0103 |
| A1A2MP7 | 2360-0117 | 6 | 1 | SCREW-MACH 6-32 .375-IN-LG PAN-HD-POZI | 00000 | ORDER BY DESCRIPTION |
| A1A2MP8 | 2950-0078 | 9 | 1 | NUT-HEX-DBL-CHAM 10-32-THD .067-IN-THK | 28480 | 2950-0078 |
| A1A2MP9 | 3050-0006 | 6 | 1 | WASHER-SHLDR NO. 10 .2-IN-ID .5-IN-OD | 28480 | 3050-0006 |
| A1A2MP10 | 3050-0062 | 4 | 1 | WASHER-FL NM NO. 8 .188-IN-ID .438-IN-OD | 28480 | 3050-0062 |
| A1A2MP11 | 08673-00020 | 9 | 1 | COVER-DETECTOR MODULE | 28480 | 08673-00020 |
| A1A2MP12 | 08673-00022 | 1 | 1 | INSULATOR-DETECTOR HOUSING | 28480 | 08673-00022 |
| A1A2MP13 | 08673-00038 | 9 | 1 | COVER-DETECTOR HOUSING (REAR) | 28480 | 08673-00038 |
| A1A2MP14 | 08673-20083 | 6 | 1 | BUSHING | 28480 | 08673-20083 |
| A1A2MP15 | 08673-20082 | 5 | 1 | DETECTOR HOUSING | 28480 | 08673-20082 |
| A1A2MP16 | 0520-0173 | 2 | 1 | SCREW-MACH 2-56 .188-IN-LG PAN-HD-POZI | 00000 | ORDER BY DESCRIPTION |
| A1A2A1 | 08673-60114 | 8 | 1 | ALC BOARD ASSEMBLY | 28480 | 08673-60114 |
| A1A2A1C1 | 0160-0576 | 5 | | CAPACITOR-FXD .1UF +-20% 50VDC CER | 28480 | 0160-0576 |
| A1A2A1C2 | 0180-0491 | 5 | 2 | CAPACITOR-FXD 10UF+-20% 25VDC TA | 28480 | 0180-0491 |
| A1A2A1C3 | 0180-2620 | 6 | 3 | CAPACITOR-FXD 2.2UF+-10% 50VDC TA | 25088 | D2R2GS1B50K |
| A1A2A1C4 | 0180-2620 | 6 | | CAPACITOR-FXD 2.2UF+-10% 50VDC TA | 25088 | D2R2GS1B50K |
| A1A2A1C5 | 0160-3454 | 4 | 1 | CAPACITOR-FXD 220PF +-10% 1KVDC CER | 28480 | 0160-3454 |
| A1A2A1C6 | 0160-3879 | 7 | 16 | CAPACITOR-FXD .01UF +-20% 100VDC CER | 28480 | 0160-3879 |
| A1A2A1C7 | 0160-2209 | 5 | 1 | CAPACITOR-FXD 360PF +-5% 300VDC MICA | 28480 | 0160-2209 |
| A1A2A1C8 | 0160-3879 | 7 | | CAPACITOR-FXD .01UF +-20% 100VDC CER | 28480 | 0160-3879 |
| A1A2A1C9 | 0160-0161 | 4 | 2 | CAPACITOR-FXD .01UF +-10% 200VDC POLYE | 28480 | 0160-0161 |
| A1A2A1C10 | 0160-3879 | 7 | | CAPACITOR-FXD .01UF +-20% 100VDC CER | 28480 | 0160-3879 |
| A1A2A1C11 | 0160-3879 | 7 | | CAPACITOR-FXD .01UF +-20% 100VDC CER | 28480 | 0160-3879 |
| A1A2A1C12 | 0160-0163 | 6 | 1 | CAPACITOR-FXD .033UF +-10% 200VDC POLYE | 28480 | 0160-0163 |
| A1A2A1C13 | 0160-0576 | 5 | | CAPACITOR-FXD .1UF +-20% 50VDC CER | 28480 | 0160-0576 |
| A1A2A1C14 | 0160-0576 | 5 | | CAPACITOR-FXD .1UF +-20% 50VDC CER | 28480 | 0160-0576 |
| A1A2A1C15 | 0160-0573 | 2 | 3 | CAPACITOR-FXD 4700PF +-20% 100VDC CER | 28480 | 0160-0573 |
| A1A2A1C16 | 0160-0573 | 2 | | CAPACITOR-FXD 4700PF +-20% 100VDC CER | 28480 | 0160-0573 |
| A1A2A1C17 | 0160-0127 | 2 | 2 | CAPACITOR-FXD 1UF +-20% 25VDC CER | 28480 | 0160-0127 |
| A1A2A1C18 | 0160-4764 | 1 | 1 | CAPACITOR-FXD 150PF +-5% 100VDC CER | 28480 | 0160-4764 |
| A1A2A1C19 | 0160-0574 | 3 | 1 | CAPACITOR-FXD .022UF +-20% 100VDC CER | 28480 | 0160-0574 |
| A1A2A1C20 | 0160-3879 | 7 | | CAPACITOR-FXD .01UF +-20% 100VDC CER | 28480 | 0160-3879 |
| A1A2A1CR1 | 1901-0040 | 1 | 12 | DIODE-SWITCHING 30V 50MA 2NS DO-35 | 28480 | 1901-0040 |
| A1A2A1CR2 | 1901-0040 | 1 | | DIODE-SWITCHING 30V 50MA 2NS DO-35 | 28480 | 1901-0040 |
| A1A2A1CR3 | 1901-0040 | 1 | | DIODE-SWITCHING 30V 50MA 2NS DO-35 | 28480 | 1901-0040 |
| A1A2A1CR4 | 1901-0040 | 1 | | DIODE-SWITCHING 30V 50MA 2NS DO-35 | 28480 | 1901-0040 |
| A1A2A1J1 | 1250-1255 | 1 | 1 | CONNECTOR-RF SMB M PC 50-OHM | 28480 | 1250-1255 |
| A1A2A1L1 | 9140-0144 | 0 | 6 | INDUCTOR RF-CH-MLD 4.7UH 10% .105DX.28LG | 28480 | 9140-0144 |
| A1A2A1L2 | 9140-0144 | 0 | | INDUCTOR RF-CH-MLD 4.7UH 10% .105DX.28LG | 28480 | 9140-0144 |
| A1A2A1L3 | 9140-0144 | 0 | | INDUCTOR RF-CH-MLD 4.7UH 10% .105DX.28LG | 28480 | 9140-0144 |
| A1A2A1MP1 | 1480-0073 | 6 | 11 | PIN-ROLL .062-IN-DIA .25-IN-LG BE-CU | 28480 | 1480-0073 |
| A1A2A1MP2 | 4040-0750 | 7 | 1 | EXTR-PC BD RED POLYC .062-BD-THKNS | 28480 | 4040-0750 |
| A1A2A1Q1 | 1855-0276 | 6 | 3 | TRANSISTOR J-FET 2N4416A N-CHAN D-MODE | 01295 | 2N4416A |
| A1A2A1Q2 | 1855-0253 | 9 | 4 | TRANSISTOR J-FET N-CHAN D-MODE TO-92 SI | 28480 | 1855-0253 |
| A1A2A1Q3 | 1855-0276 | 6 | | TRANSISTOR J-FET 2N4416A N-CHAN D-MODE | 01295 | 2N4416A |
| A1A2A1Q4 | 1854-0477 | 7 | 4 | TRANSISTOR NPN 2N2222A SI TO-18 PD=500MW | 04713 | 2N2222A |
| A1A2A1Q5 | 1853-0322 | 9 | 4 | TRANSISTOR PNP 2N2946A SI TO-46 PD=400MW | 01295 | 2N2946A |
| A1A2A1Q6 | 1855-0276 | 6 | | TRANSISTOR J-FET 2N4416A N-CHAN D-MODE | 01295 | 2N4416A |
| A1A2A1Q7 | 1853-0316 | 1 | 2 | TRANSISTOR-DUAL PNP PD=500MW | 28480 | 1853-0316 |
| A1A2A1Q8 | 1854-0477 | 7 | | TRANSISTOR NPN 2N2222A SI TO-18 PD=500MW | 04713 | 2N2222A |
| A1A2A1Q9 | 1854-0810 | 2 | | TRANSISTOR NPN SI PD=625MW FT=200MHZ | 28480 | 1854-0810 |
| A1A2A1Q10 | 1853-0529 | 9 | 1 | TRANSISTOR-DUAL PNP PD=2.5W | 28480 | 1853-0529 |
| A1A2A1Q11 | 1853-0459 | 3 | 21 | TRANSISTOR PNP SI PD=625MW FT=200MHZ | 28480 | 1853-0459 |
| A1A2A1Q12 | 1854-0810 | 2 | | TRANSISTOR NPN SI PD=625MW FT=200MHZ | 28480 | 1854-0810 |
| A1A2A1Q13 | 1855-0253 | 9 | | TRANSISTOR J-FET N-CHAN D-MODE TO-92 SI | 28480 | 1855-0253 |
| A1A2A1Q14 | 1854-0810 | 2 | | TRANSISTOR NPN SI PD=625MW FT=200MHZ | 28480 | 1854-0810 |
| A1A2A1Q15 | 1855-0251 | 7 | 1 | TRANSISTOR MOSFET N-CHAN E-MODE TO-39 SI | 28480 | 1855-0251 |

See introduction to this section for ordering information
*Indicates factory selected value
†Backdating information in Section VII



www.valuetronics.com

A1

## Table 6-3. Replaceable Parts

| Reference Designation | HP Part Number | C D | Qty | Description | Mfr Code | Mfr Part Number |
|---|---|---|---|---|---|---|
| A1A2A1Q16 | 1853-0322 | 9 | | TRANSISTOR PNP 2N2946A SI TO-46 PD=400MW | 01295 | 2N2946A |
| A1A2A1R1 | 2100-3273 | 1 | 1 | RESISTOR-TRMR 2K 10% C SIDE-ADJ 1-TRN | 28480 | 2100-3273 |
| A1A2A1R2 | 0698-7576 | 8 | 2 | RESISTOR 217 .1% .125W F TC=0+-25 | 19701 | MF4C1/8-T9-217R-B |
| A1A2A1R3 | 0757-0409 | 8 | 1 | RESISTOR 274 1% .125W F TC=0+-100 | 24546 | C4-1/8-T0-274R-F |
| A1A2A1R4 | 0698-7280 | 1 | 6 | RESISTOR 68.1K 1% .05W F TC=0+-100 | 24546 | C3-1/8-T0-6812-F |
| A1A2A1R5 | 0698-7280 | 1 | | RESISTOR 68.1K 1% .05W F TC=0+-100 | 24546 | C3-1/8-T0-6812-F |
| A1A2A1R6 | 0698-7280 | 1 | | RESISTOR 68.1K 1% .05W F TC=0+-100 | 24546 | C3-1/8-T0-6812-F |
| A1A2A1R7 | 0698-5383 | 1 | 1 | RESISTOR 11.5K 1% .125W F TC=0+-25 | 28480 | 0698-5383 |
| A1A2A1R8 | 0698-7243 | 6 | 8 | RESISTOR 1.96K 1% .05W F TC=0+-100 | 24546 | C3-1/8-T0-1961-F |
| A1A2A1R9 | 0698-7222 | 1 | 4 | RESISTOR 261 1% .05W F TC=0+-100 | 24546 | C3-1/8-T0-261R-F |
| A1A2A1R10 | 0698-7280 | 1 | | RESISTOR 68.1K 1% .05W F TC=0+-100 | 24546 | C3-1/8-T0-6812-F |
| A1A2A1R11 | 0698-7280 | 1 | | RESISTOR 68.1K 1% .05W F TC=0+-100 | 24546 | C3-1/8-T0-6812-F |
| A1A2A1R12 | 0698-7260 | 7 | 24 | RESISTOR 10K 1% .05W F TC=0+-100 | 24546 | C3-1/8-T0-1002-F |
| A1A2A1R13 | 0698-7277 | 6 | 12 | RESISTOR 61.1K 1% .05W F TC=0+-100 | 24546 | C3-1/8-T0-5112-F |
| A1A2A1R14 | 0698-7260 | 7 | | RESISTOR 10K 1% .05W F TC=0+-100 | 24546 | C3-1/8-T0-1002-F |
| A1A2A1R15 | 0699-0784 | 8 | 1 | RESISTOR 17.55K .1% .1W F TC=0+-15 | 28480 | 0699-0784 |
| A1A2A1R16 | 0698-7576 | 8 | | RESISTOR 217 .1% .125W F TC=0+-25 | 19701 | MF4C1/8-T9-217R-B |
| A1A2A1R17 | 0699-0994 | 2 | 1 | RESISTOR-28.544K .1% .125W F TC=0+-25PPM | 28480 | 0699-0994 |
| A1A2A1R18 | 0699-0096 | 5 | 2 | RESISTOR 12K .1% .1W F TC=0+-10 | 28480 | 0699-0096 |
| A1A2A1R19 | 0699-0993 | 1 | 1 | RESISTOR 46.4K .1% .125W F TC=0+-25PPM | 28480 | 0699-0993 |
| A1A2A1R20 | 0699-0992 | 0 | 1 | RESISTOR-227.2 .1% .125W F TC=0+-25PPM | 28480 | 0699-0992 |
| A1A2A1R21 | 0699-0991 | 9 | 1 | RESISTOR-4.452K .1% .125W F TC=0+-25PPM | 28480 | 0699-0991 |
| A1A2A1R22 | 0698-7277 | 6 | | RESISTOR 51.1K 1% .05W F TC=0+-100 | 24546 | C3-1/8-T0-5112-F |
| A1A2A1R23 | 0698-7260 | 7 | | RESISTOR 10K 1% .05W F TC=0+-100 | 24546 | C3-1/8-T0-1002-F |
| A1A2A1R24 | | | | NOT ASSIGNED | | |
| A1A2A1R25 | 0698-7234 | 5 | 1 | RESISTOR 825 1% .05W F TC=0+-100 | 24546 | C3-1/8-T0-825R-F |
| A1A2A1R26 | 0698-6329 | 7 | 2 | RESISTOR 845 1% .125W F TC=0+-25 | 28480 | 0698-6329 |
| A1A2A1R27 | 0698-7227 | 6 | 1 | RESISTOR 422 1% .05W F TC=0+-100 | 24546 | C3-1/8-T0-422R-F |
| A1A2A1R28 | 0698-7272 | 1 | 3 | RESISTOR 31.6K 1% .05W F TC=0+-100 | 24546 | C3-1/8-T0-3162-F |
| A1A2A1R29 | 0698-8827 | 4 | 2 | RESISTOR 1M 1% .125W F TC=0+-100 | 28480 | 0698-8827 |
| A1A2A1R30 | 2100-3353 | 8 | 4 | RESISTOR-TRMR 20K 10% C SIDE-ADJ 1-TRN | 28480 | 2100-3353 |
| A1A2A1R31 | 0698-7284 | 5 | 4 | RESISTOR 100K 1% .05W F TC=0+-100 | 24546 | C3-1/8-T0-1003-F |
| A1A2A1R32 | 0698-7284 | 5 | | RESISTOR 100K 1% .05W F TC=0+-100 | 24546 | C3-1/8-T0-1003-F |
| A1A2A1R33 | 0698-7243 | 6 | | RESISTOR 1.96K 1% .05W F TC=0+-100 | 24546 | C3-1/8-T0-1961-F |
| A1A2A1R34 | 0698-7277 | 6 | | RESISTOR 51.1K 1% .05W F TC=0+-100 | 24546 | C3-1/8-T0-5112-F |
| A1A2A1R35 | 0757-0274 | 5 | 4 | RESISTOR 1.21K 1% .125W F TC=0+-100 | 24546 | C4-1/8-T0-1211-F |
| A1A2A1R36 | 0757-0438 | 3 | 12 | RESISTOR 5.11K 1% .125W F TC=0+-100 | 24546 | C4-1/8-T0-5111-F |
| A1A2A1R37 | 0698-7198 | 0 | 2 | RESISTOR 26.1 1% .05W F TC=0+-100 | 24546 | C3-1/8-T0-26R1-F |
| A1A2A1R38 | 0698-7212 | 9 | 16 | RESISTOR 100 1% .05W F TC=0+-100 | 24546 | C3-1/8-T0-100R-F |
| A1A2A1R39 | 0698-7212 | 9 | | RESISTOR 100 1% .05W F TC=0+-100 | 24546 | C3-1/8-T0-100R-F |
| A1A2A1R40 | 0698-7243 | 6 | | RESISTOR 1.96K 1% .05W F TC=0+-100 | 24546 | C3-1/8-T0-1961-F |
| A1A2A1R41 | 0698-7261 | 8 | 2 | RESISTOR 11K 1% .05W F TC=0+-100 | 24546 | C3-1/8-T0-1102-F |
| A1A2A1R42 | 0698-7188 | 8 | 16 | RESISTOR 10 1% .05W F TC=0+-100 | 24546 | C3-1/8-T0-10R-F |
| A1A2A1R43 | 0698-7188 | 8 | | RESISTOR 10 1% .05W F TC=0+-100 | 24546 | C3-1/8-T0-10R-F |
| A1A2A1R44 | 0698-7224 | 3 | 3 | RESISTOR 316 1% .05W F TC=0+-100 | 24546 | C3-1/8-T0-316R-F |
| A1A2A1R45 | 0757-0280 | 3 | 23 | RESISTOR 1K 1% .125W F TC=0+-100 | 24546 | C4-1/8-T0-1001-F |
| A1A2A1R46 | 0757-0280 | 3 | | RESISTOR 1K 1% .125W F TC=0+-100 | 24546 | C4-1/8-T0-1001-F |
| A1A2A1R47 | 0698-7260 | 7 | | RESISTOR 10K 1% .05W F TC=0+-100 | 24546 | C3-1/8-T0-1002-F |
| A1A2A1R48 | 0698-7212 | 9 | | RESISTOR 100 1% .05W F TC=0+-100 | 24546 | C3-1/8-T0-100R-F |
| A1A2A1R49 | 0698-7212 | 9 | | RESISTOR 100 1% .05W F TC=0+-100 | 24546 | C3-1/8-T0-100R-F |
| A1A2A1R50 | 0698-3458 | 8 | 1 | RESISTOR 383K 1% .125W F TC=0+-100 | 28480 | 0698-3458 |
| A1A2A1R51 | 0698-7236 | 7 | 4 | RESISTOR 1K 1% .05W F TC=0+-100 | 24546 | C3-1/8-T0-1001-F |
| A1A2A1R52 | 0698-7260 | 7 | | RESISTOR 10K 1% .05W F TC=0+-100 | 24546 | C3-1/8-T0-1002-F |
| A1A2A1R53 | 0698-7243 | 6 | | RESISTOR 1.96K 1% .05W F TC=0+-100 | 24546 | C3-1/8-T0-1961-F |
| A1A2A1R54 | 0698-7212 | 9 | | RESISTOR 100 1% .05W F TC=0+-100 | 24546 | C3-1/8-T0-100R-F |
| A1A2A1R55 | 0757-0290 | 5 | 2 | RESISTOR 6.19K 1% .125W F TC=0+-100 | 19701 | MF4C1/8-T0-6191-F |
| A1A2A1R56 | 0698-7260 | 7 | | RESISTOR 10K 1% .05W F TC=0+-100 | 24546 | C3-1/8-T0-1002-F |
| A1A2A1R57 | 2100-3353 | 8 | | RESISTOR-TRMR 20K 10% C SIDE-ADJ 1-TRN | 28480 | 2100-3353 |
| A1A2A1R58 | 2100-3353 | 8 | | RESISTOR-TRMR 20K 10% C SIDE-ADJ 1-TRN | 28480 | 2100-3353 |
| A1A2A1R59 | 2100-3274 | 2 | 5 | RESISTOR-TRMR 10K 10% C SIDE-ADJ 1-TRN | 28480 | 2100-3274 |
| A1A2A1R60 | 0698-7243 | 6 | | RESISTOR 1.96K 1% .05W F TC=0+-100 | 24546 | C3-1/8-T0-1961-F |
| A1A2A1R61 | 2100-3274 | 2 | | RESISTOR-TRMR 10K 10% C SIDE-ADJ 1-TRN | 28480 | 2100-3274 |
| A1A2A1R62 | 0698-7272 | 1 | | RESISTOR 31.6K 1% .05W F TC=0+-100 | 24546 | C3-1/8-T0-3162-F |
| A1A2A1R63 | 0698-7270 | 9 | 3 | RESISTOR 26.1K 1% .05W F TC=0+-100 | 24546 | C3-1/8-T0-2612-F |
| A1A2A1R64 | 0698-7267 | 4 | 1 | RESISTOR 19.6K 1% .05W F TC=0+-100 | 24546 | C3-1/8-T0-1962-F |
| A1A2A1R65 | 0698-7265 | 2 | 2 | RESISTOR 16.2K 1% .05W F TC=0+-100 | 24546 | C3-1/8-T0-1622-F |

See introduction to this section for ordering information
*Indicates factory selected value
†Backdating information in Section VII



www.valuetronics.com

A1

Table 6-3. Replaceable Parts

| Reference Designation | HP Part Number | CD | Qty | Description | Mfr Code | Mfr Part Number |
|---|---|---|---|---|---|---|
| A1A2A1R66 | 0698-7282 | 3 | 1 | RESISTOR 82.5K 1% .05W F TC=0+-100 | 24546 | C3-1/8-TO-8252-F |
| A1A2A1R67 | 0698-7277 | 6 | | RESISTOR 51.1K 1% .05W F TC=0+-100 | 24546 | C3-1/8-TO-5112-F |
| A1A2A1R68 | 0698-7277 | 6 | | RESISTOR 51.1K 1% .05W F TC=0+-100 | 24546 | C3-1/8-TO-5112-F |
| A1A2A1R69 | 0698-7280 | 1 | | RESISTOR 68.1K 1% .05W F TC=0+-100 | 24546 | C3-1/8-TO-6812-F |
| A1A2A1R70 | 0757-0180 | 2 | 3 | RESISTOR 31.6 1% .125W F TC=0+-100 | 28480 | 0757-0180 |
| A1A2A1R71 | 0698-7222 | 1 | | RESISTOR 261 1% .05W F TC=0+-100 | 24546 | C3-1/8-TO-261R-F |
| A1A2A1R72 | 0698-7188 | 8 | | RESISTOR 10 1% .05W F TC=0+-100 | 24546 | C3-1/8-TO-10R-F |
| A1A2A1R73 | 0757-0346 | 2 | 7 | RESISTOR 10 1% .125W F TC=0+-100 | 24546 | C4-1/8-TO-10R0-F |
| A1A2A1R74 | 0698-7252 | 7 | 3 | RESISTOR 4.64K 1% .05W F TC=0+-100 | 24546 | C3-1/8-TO-4641-F |
| A1A2A1R75 | 0698-7243 | 6 | | RESISTOR 1.96K 1% .05W F TC=0+-100 | 24546 | C3-1/8-TO-1961-F |
| A1A2A1R76 | 0698-7260 | 7 | | RESISTOR 10K 1% .05W F TC=0+-100 | 24546 | C3-1/8-TO-1002-F |
| A1A2A1RT1 | 0837-0232 | 5 | 1 | THERMISTOR-POS. TEMP. COEEF. 2.00Kà25C | 28480 | 0837-0232 |
| A1A2A1TP1 | 0360-0535 | 0 | 33 | TERMINAL TEST POINT PCB | 00000 | ORDER BY DESCRIPTION |
| A1A2A1TP2 | 0360-0535 | 0 | | TERMINAL TEST POINT PCB | 00000 | ORDER BY DESCRIPTION |
| A1A2A1TP3 | 0360-0535 | 0 | | TERMINAL TEST POINT PCB | 00000 | ORDER BY DESCRIPTION |
| A1A2A1TP4 | 0360-0535 | 0 | | TERMINAL TEST POINT PCB | 00000 | ORDER BY DESCRIPTION |
| A1A2A1TP5 | 0360-0535 | 0 | | TERMINAL TEST POINT PCB | 00000 | ORDER BY DESCRIPTION |
| A1A2A1U1 | 1826-0601 | 0 | 2 | IC OP AMP PRCN TO-99 PKG | 06665 | OP-16FJ |
| A1A2A1U2 | 1826-0486 | 9 | 1 | IC MULTIPLXR 4-CHAN-ANLG DUAL 16-DIP-P | 04713 | MC14052BCP |
| A1A2A1U3 | 1826-0488 | 1 | 1 | IC OP AMP WB TO-99 PKG | 27014 | LM218H |
| A1A2A1U4 | 1826-0601 | 0 | | IC OP AMP PRCN TO-99 PKG | 06665 | OP-16FJ |
| A1A2A1U5 | 1826-0720 | 4 | 1 | IC SWITCH ANLG QUAD 16-DIP-C PKG | 06665 | SW-02FQ |
| A1A2A1VR1 | 1902-0951 | 5 | 4 | DIODE-ZNR 5.1V 5% DO-35 PD=.4W TC=+.035% | 28480 | 1902-0951 |
| A1A2A2 | 08673-60031 | 8 | 1 | DETECTOR BOARD ASSEMBLY | 28480 | 08673-60031 |
| A1A2A2C1 | 0180-2661 | 5 | 3 | CAPACITOR-FXD 1UF+-10% 50VDC TA | 25088 | D1R0G51A50K |
| A1A2A2C2 | 0160-3879 | 7 | | CAPACITOR-FXD .01UF +-20% 100VDC CER | 28480 | 0160-3879 |
| A1A2A2C3 | 0180-2731 | 0 | 1 | CAPACITOR-FXD 2.2UF+-10% 20VDC TA | 28480 | 0180-2731 |
| A1A2A2C4 | 0160-3879 | 7 | | CAPACITOR-FXD .01UF +-20% 100VDC CER | 28480 | 0160-3879 |
| A1A2A2C5 | 0160-3879 | 7 | | CAPACITOR-FXD .01UF +-20% 100VDC CER | 28480 | 0160-3879 |
| A1A2A2C6 | 0160-3879 | 7 | | CAPACITOR-FXD .01UF +-20% 100VDC CER | 28480 | 0160-3879 |
| A1A2A2C7 | 0160-3879 | 7 | | CAPACITOR-FXD .01UF +-20% 100VDC CER | 28480 | 0160-3879 |
| A1A2A2C8 | 0180-2661 | 5 | | CAPACITOR-FXD 1UF+-10% 50VDC TA | 25088 | D1R0G51A50K |
| A1A2A2C9 | 0160-2244 | 8 | 1 | CAPACITOR-FXD 3PF +-.25PF 500VDC CER | 28480 | 0160-2244 |
| A1A2A2C10 | 0160-0174 | 9 | 6 | CAPACITOR-FXD .47UF +80-20% 25VDC CER | 28480 | 0160-0174 |
| A1A2A2C11 | 0160-0576 | 5 | | CAPACITOR-FXD .1UF +-20% 50VDC CER | 28480 | 0160-0576 |
| A1A2A2C12 | 0160-3877 | 5 | 4 | CAPACITOR-FXD 100PF +-20% 200VDC CER | 28480 | 0160-3877 |
| A1A2A2C13 | 0160-2256 | 2 | 1 | CAPACITOR-FXD 9.1PF +-.25PF 500VDC CER | 28480 | 0160-2256 |
| A1A2A2C14 | 0160-2250 | 6 | 2 | CAPACITOR-FXD 5.1PF +-.25PF 500VDC CER | 28480 | 0160-2250 |
| A1A2A2C15 | 0160-2250 | 6 | | CAPACITOR-FXD 5.1PF +-.25PF 500VDC CER | 28480 | 0160-2250 |
| A1A2A2CR1 | 1901-0539 | 3 | 21 | DIODE-SM SIG SCHOTTKY | 28480 | 1901-0539 |
| A1A2A2CR2 | 1901-0050 | 3 | | DIODE-SWITCHING 80V 200MA 2NS DO-35 | 28480 | 1901-0050 |
| A1A2A2CR3 | 1901-0050 | 3 | | DIODE-SWITCHING 80V 200MA 2NS DO-35 | 28480 | 1901-0050 |
| A1A2A2E1 | 9170-0962 | 3 | 5 | CORE-SHIELDING BEAD | 28480 | 9170-0962 |
| A1A2A2E2 | 9170-0962 | 3 | | CORE-SHIELDING BEAD | 28480 | 9170-0962 |
| A1A2A2E3 | 9170-0962 | 3 | | CORE-SHIELDING BEAD | 28480 | 9170-0962 |
| A1A2A2E4 | 9170-0962 | 3 | | CORE-SHIELDING BEAD | 28480 | 9170-0962 |
| A1A2A2E5 | 9170-0962 | 3 | | CORE-SHIELDING BEAD | 28480 | 9170-0962 |
| A1A2A2J1 | 1250-1220 | 0 | 1 | CONNECTOR-RF SMC M PC 50-OHM | 28480 | 1250-1220 |
| A1A2A2Q1 | 1853-0459 | 3 | | TRANSISTOR PNP SI PD=625MW FT=200MHZ | 28480 | 1853-0459 |
| A1A2A2Q2 | 1854-0345 | 8 | 3 | TRANSISTOR NPN 2N5179 SI TO-72 PD=200MW | 04713 | 2N5179 |
| A1A2A2Q3 | 1855-0268 | 6 | 2 | TRANSISTOR J-FET N-CHAN D-MODE TO-92 SI | 17856 | J309 |
| A1A2A2Q4 | 1855-0268 | 6 | | TRANSISTOR J-FET N-CHAN D-MODE TO-92 SI | 17856 | J309 |
| A1A2A2Q5 | 1854-0345 | 8 | | TRANSISTOR NPN 2N5179 SI TO-72 PD=200MW | 04713 | 2N5179 |
| A1A2A2Q6 | 1854-0345 | 8 | | TRANSISTOR NPN 2N5179 SI TO-72 PD=200MW | 04713 | 2N5179 |
| A1A2A2Q7 | 1853-0405 | 9 | 9 | TRANSISTOR PNP SI PD=300MW FT=850MHZ | 04713 | 2N4209 |
| A1A2A2Q8 | 1853-0075 | 9 | 1 | TRANSISTOR-DUAL PNP PD=400MW | 28480 | 1853-0075 |
| A1A2A2Q9 | 1854-0475 | 5 | 2 | TRANSISTOR-DUAL NPN PD=750MW | 28480 | 1854-0475 |
| A1A2A2Q10 | 1853-0451 | 5 | 2 | TRANSISTOR PNP 2N3799 SI TO-18 PD=360MW | 01295 | 2N3799 |
| A1A2A2Q11 | 1853-0451 | 5 | | TRANSISTOR PNP 2N3799 SI TO-18 PD=360MW | 01295 | 2N3799 |
| A1A2A2Q12 | 1854-0810 | 2 | | TRANSISTOR NPN SI PD=625MW FT=200MHZ | 28480 | 1854-0810 |
| A1A2A2Q13 | 1854-0295 | 7 | 1 | TRANSISTOR-DUAL NPN PD=400MW | 28480 | 1854-0295 |

See introduction to this section for ordering information
*Indicates factory selected value
†Backdating information in Section VII



www.valuetronics.com

A1

Table 6-3. Replaceable Parts

| Reference Designation | HP Part Number | C D | Qty | Description | Mfr Code | Mfr Part Number |
|---|---|---|---|---|---|---|
| A1A2A2R1 | 0811-3591 | 1 | 1 | RESISTOR-0.2+-0.5% 1W WW F TC=+-90PPM/C | 28480 | 0811-3591 |
| A1A2A2R2 | 0698-7188 | 8 | | RESISTOR 10 1% .05W F TC=0+-100 | 24546 | C3-1/8-T0-10R-F |
| A1A2A2R3 | 0698-7188 | 8 | | RESISTOR 10 1% .05W F TC=0+-100 | 24546 | C3-1/8-T0-10R-F |
| A1A2A2R4 | 0698-7198 | 0 | | RESISTOR 26.1 1% .05W F TC=0+-100 | 24546 | C3-1/8-T0-26R1-F |
| A1A2A2R5 | 0698-7188 | 8 | | RESISTOR 10 1% .05W F TC=0+-100 | 24546 | C3-1/8-T0-10R-F |
| A1A2A2R6 | 0698-7188 | 8 | | RESISTOR 10 1% .05W F TC=0+-100 | 24546 | C3-1/8-T0-10R-F |
| A1A2A2R7 | 0698-7260 | 7 | | RESISTOR 10K 1% .05W F TC=0+-100 | 24546 | C3-1/8-T0-1002-F |
| A1A2A2R8 | 0698-7212 | 9 | | RESISTOR 100 1% .05W F TC=0+-100 | 24546 | C3-1/8-T0-100R-F |
| A1A2A2R9 | 0698-7260 | 7 | | RESISTOR 10K 1% .05W F TC=0+-100 | 24546 | C3-1/8-T0-1002-F |
| A1A2A2R10 | 0757-0419 | 0 | 4 | RESISTOR 681 1% .125W F TC=0+-100 | 24546 | C4-1/8-T0-681R-F |
| A1A2A2R11 | 0698-7244 | 7 | 7 | RESISTOR 2.15K 1% .05W F TC=0+-100 | 24546 | C3-1/8-T0-2151-F |
| A1A2A2R12 | 2100-2039 | 5 | 2 | RESISTOR-TRMR 20K 5% WW SIDE-ADJ 10-TRN | 28480 | 2100-2039 |
| A1A2A2R13 | 0698-7212 | 9 | | RESISTOR 100 1% .05W F TC=0+-100 | 24546 | C3-1/8-T0-100R-F |
| A1A2A2R14 | 0698-7244 | 7 | | RESISTOR 2.15K 1% .05W F TC=0+-100 | 24546 | C3-1/8-T0-2151-F |
| A1A2A2R15 | 0698-7244 | 7 | | RESISTOR 2.15K 1% .05W F TC=0+-100 | 24546 | C3-1/8-T0-2151-F |
| A1A2A2R16 | 0698-7202 | 7 | 1 | RESISTOR 38.3 1% .05W F TC=0+-100 | 24546 | C3-1/8-T0-38R3-F |
| A1A2A2R17 | 0698-7244 | 7 | | RESISTOR 2.15K 1% .05W F TC=0+-100 | 24546 | C3-1/8-T0-2151-F |
| A1A2A2R18 | 0698-7244 | 7 | | RESISTOR 2.15K 1% .05W F TC=0+-100 | 24546 | C3-1/8-T0-2151-F |
| A1A2A2R19 | 0698-7244 | 7 | | RESISTOR 2.15K 1% .05W F TC=0+-100 | 24546 | C3-1/8-T0-2151-F |
| A1A2A2R20 | 0698-7243 | 6 | | RESISTOR 1.96K 1% .05W F TC=0+-100 | 24546 | C3-1/8-T0-1961-F |
| A1A2A2R21 | 2100-0545 | 4 | 2 | RESISTOR-TRMR 1K 10% C SIDE-ADJ 17-TRN | 32997 | 3282X-1-102 |
| A1A2A2R22 | 0698-7272 | 1 | | RESISTOR 31.6K 1% .05W F TC=0+-100 | 24546 | C3-1/8-T0-3162-F |
| A1A2A2R23 | 0698-7229 | 8 | 2 | RESISTOR 511 1% .05W F TC=0+-100 | 24546 | C3-1/8-T0-511R-F |
| A1A2A2R24 | 0698-7203 | 8 | 1 | RESISTOR 42.2 1% .05W F TC=0+-100 | 24546 | C3-1/8-T0-42R2-F |
| A1A2A2R25 | 0698-7236 | 7 | | RESISTOR 1K 1% .05W F TC=0+-100 | 24546 | C3-1/8-T0-1001-F |
| A1A2A2R26 | 2100-3751 | 0 | 1 | RESISTOR-TRMR 10 10% C SIDE-ADJ 17-TRN | 28480 | 2100-3751 |
| A1A2A2R27 | 0757-0459 | 8 | 2 | RESISTOR 56.2K 1% .125W F TC=0+-100 | 24546 | C4-1/8-T0-5622-F |
| A1A2A2R28 | 0811-2031 | 2 | 1 | RESISTOR 815 3% .25W PWW TC=+5900+-300 | 20940 | 143-1/4-815R-3 |
| A1A2A2R29 | 2100-1922 | 3 | 1 | RESISTOR-TRMR 5K 10% C SIDE-ADJ 22-TRN | 32997 | 3059Y-1-502 |
| A1A2A2R30 | 0698-7279 | 8 | 1 | RESISTOR 61.9K 1% .05W F TC=0+-100 | 24546 | C3-1/8-T0-6192-F |
| A1A2A2R31 | | | | NOT ASSIGNED | | |
| A1A2A2R32 | 0698-6320 | 8 | 2 | RESISTOR 5K .1% .125W F TC=0+-25 | 03888 | PME55-1/8-T9-5001-B |
| A1A2A2R33 | 0698-7253 | 8 | 2 | RESISTOR 5.11K 1% .05W F TC=0+-100 | 24546 | C3-1/8-T0-5111-F |
| A1A2A2R34 | 0698-7216 | 3 | 2 | RESISTOR 147 1% .05W F TC=0+-100 | 24546 | C3-1/8-T0-147R-F |
| A1A2A2R35 | 0757-0317 | 7 | 7 | RESISTOR 1.33K 1% .125W F TC=0+-100 | 24546 | C4-1/8-T0-1331-F |
| A1A2A2R36 | 0698-7249 | 2 | 1 | RESISTOR 3.48K 1% .05W F TC=0+-100 | 24546 | C3-1/8-T0-3481-F |
| A1A2A2R37 | 0698-7253 | 8 | | RESISTOR 5.11K 1% .05W F TC=0+-100 | 24546 | C3-1/8-T0-5111-F |
| A1A2A2R38 | 0698-7248 | 1 | | RESISTOR 3.16K 1% .05W F TC=0+-100 | 24546 | C3-1/8-T0-3161-F |
| A1A2A2R39 | 0699-0140 | 0 | 1 | RESISTOR 524 .1% .1W F TC=0+-15 | 28480 | 0699-0140 |
| A1A2A2R40 | 2100-0545 | 4 | | RESISTOR-TRMR 1K 10% C SIDE-ADJ 17-TRN | 32997 | 3282X-1-102 |
| A1A2A2R41 | 0698-8779 | 5 | 1 | RESISTOR 280 .1% .1W F TC=0+-5 | 28480 | 0698-8779 |
| A1A2A2R42 | 0698-6320 | 8 | | RESISTOR 5K .1% .125W F TC=0+-25 | 03888 | PME55-1/8-T9-5001-B |
| A1A2A2R43 | 0698-6329 | 7 | | RESISTOR 845 1% .125W F TC=0+-25 | 28480 | 0698-6329 |
| A1A2A2R44 | 0757-0274 | 5 | | RESISTOR 1.21K 1% .125W F TC=0+-100 | 24546 | C4-1/8-T0-1211-F |
| A1A2A2RT1 | 0837-0124 | 4 | 1 | THERMISTOR DISC 250-OHM TC=-4.4%/C-DEG | 28480 | 0837-0124 |
| A1A2A2TP1 | 0360-0535 | 0 | | TERMINAL TEST POINT PCB | 00000 | ORDER BY DESCRIPTION |
| A1A2A2TP2 | 0360-0535 | 0 | | TERMINAL TEST POINT PCB | 00000 | ORDER BY DESCRIPTION |
| A1A2A2U1 | 1826-0471 | 2 | 2 | IC OP AMP LOW-DRIFT TO-99 PKG | 28480 | 1826-0471 |
| A1A3 | 08673-60112 | 6 | 1 | FUNCTION BOARD ASSEMBLY | 28480 | 08673-60112 |
| A1A3C1 | 0180-0374 | 3 | 2 | CAPACITOR-FXD 10UF+-10% 20VDC TA | 56289 | 150D106X9020B2 |
| A1A3C2 | 0160-0570 | 9 | 17 | CAPACITOR-FXD 220PF +-20% 100VDC CER | 20932 | 5024EM100RD221M |
| A1A3C3 | 0180-0197 | 8 | | CAPACITOR-FXD 2.2UF+-10% 20VDC TA | 56289 | 150D225X9020A2 |
| A1A3C4 | 0180-0291 | 3 | | CAPACITOR-FXD 1UF+-10% 35VDC TA | 56289 | 150D105X9035A2 |
| A1A3C5 | 0180-0197 | 8 | | CAPACITOR-FXD 2.2UF+-10% 20VDC TA | 56289 | 150D225X9020A2 |
| A1A3C6 | 0160-0576 | 5 | | CAPACITOR-FXD .1UF +-20% 50VDC CER | 28480 | 0160-0576 |
| A1A3C7 | 0160-0576 | 5 | | CAPACITOR-FXD .1UF +-20% 50VDC CER | 28480 | 0160-0576 |
| A1A3C8 | 0160-0576 | 5 | | CAPACITOR-FXD .1UF +-20% 50VDC CER | 28480 | 0160-0576 |
| A1A3C9 | 0160-2207 | 3 | 1 | CAPACITOR-FXD 300PF +-5% 300VDC MICA | 28480 | 0160-2207 |
| A1A3C10 | 0140-0196 | 3 | 1 | CAPACITOR-FXD 150PF +-5% 300VDC MICA | 72136 | DM15F151J0300WV1CR |
| A1A3C11 | 0160-0576 | 5 | | CAPACITOR-FXD .1UF +-20% 50VDC CER | 28480 | 0160-0576 |
| A1A3C12 | 0160-0576 | 5 | | CAPACITOR-FXD .1UF +-20% 50VDC CER | 28480 | 0160-0576 |
| A1A3C13 | 0160-2265 | 3 | 3 | CAPACITOR-FXD 22PF +-5% 500VDC CER 0+-30 | 28480 | 0160-2265 |
| A1A3C14 | 0160-2200 | 6 | 1 | CAPACITOR-FXD 43PF +-5% 300VDC MICA | 28480 | 0160-2200 |
| A1A3C15 | 0160-3878 | 6 | 6 | CAPACITOR-FXD 1000PF +-20% 100VDC CER | 28480 | 0160-3878 |

See introduction to this section for ordering information
*Indicates factory selected value
†Backdating information in Section VII



www.valuetronics.com

A1

Table 6-3. Replaceable Parts

| Reference Designation | HP Part Number | CD | Qty | Description | Mfr Code | Mfr Part Number |
|---|---|---|---|---|---|---|
| A1A3C16 | 0160-0576 | 5 | | CAPACITOR-FXD .1UF +-20% 50VDC CER | 28480 | 0160-0576 |
| A1A3C17 | 0160-0576 | 5 | | CAPACITOR-FXD .1UF +-20% 50VDC CER | 28480 | 0160-0576 |
| A1A3C18 | 0160-0155 | 6 | 1 | CAPACITOR-FXD 3300PF +-10% 200VDC POLYE | 28480 | 0160-0155 |
| A1A3C19 | 0160-0576 | 5 | | CAPACITOR-FXD .1UF +-20% 50VDC CER | 28480 | 0160-0576 |
| A1A3C20 | 0160-5652 | 8 | 2 | CAPACITOR-FXD 2.2UF +-20% 50VDC CER | 28480 | 0160-5652 |
| A1A3C21 | 0160-4031 | 5 | 2 | CAPACITOR-FXD 330PF +-5% 100VDC CER | 28480 | 0160-4031 |
| A1A3C22 | 0160-5652 | 8 | | CAPACITOR-FXD 2.2UF +-20% 50VDC CER | 28480 | 0160-5652 |
| A1A3C23 | 0160-3876 | 4 | 4 | CAPACITOR-FXD 47PF +-20% 200VDC CER | 28480 | 0160-3876 |
| A1A3C24 | 0160-2055 | 9 | 10 | CAPACITOR-FXD .01UF +80-20% 100VDC CER | 28480 | 0160-2055 |
| A1A3C25 | 0160-0576 | 5 | | CAPACITOR-FXD .1UF +-20% 50VDC CER | 28480 | 0160-0576 |
| A1A3C26 | 0160-0576 | 5 | | CAPACITOR-FXD .1UF +-20% 50VDC CER | 28480 | 0160-0576 |
| A1A3C27 | 0160-0576 | 5 | | CAPACITOR-FXD .1UF +-20% 50VDC CER | 28480 | 0160-0576 |
| A1A3C28 | 0160-0576 | 5 | | CAPACITOR-FXD .1UF +-20% 50VDC CER | 28480 | 0160-0576 |
| A1A3C29 | 0160-2265 | 3 | | CAPACITOR-FXD 22PF +-5% 500VDC CER 0+-30 | 28480 | 0160-2265 |
| A1A3C30 | 0160-0576 | 5 | | CAPACITOR-FXD .1UF +-20% 50VDC CER | 28480 | 0160-0576 |
| A1A3C31 | 0160-0576 | 5 | | CAPACITOR-FXD .1UF +-20% 50VDC CER | 28480 | 0160-0576 |
| A1A3C32 | 0160-0161 | 4 | | CAPACITOR-FXD .01UF +-10% 200VDC POLYE | 28480 | 0160-0161 |
| A1A3C33 | 0160-4386 | 3 | 1 | CAPACITOR-FXD 33PF +-5% 200VDC CER 0+-30 | 28480 | 0160-4386 |
| A1A3C34 | 0160-2055 | 9 | | CAPACITOR-FXD .01UF +80-20% 100VDC CER | 28480 | 0160-2055 |
| A1A3C35 | 0160-0576 | 5 | | CAPACITOR-FXD .1UF +-20% 50VDC CER | 28480 | 0160-0576 |
| A1A3C36 | 0160-0576 | 5 | | CAPACITOR-FXD .1UF +-20% 50VDC CER | 28480 | 0160-0576 |
| A1A3C37 | 0160-0576 | 5 | | CAPACITOR-FXD .1UF +-20% 50VDC CER | 28480 | 0160-0576 |
| A1A3CR1 | 1901-0050 | 3 | | DIODE-SWITCHING 80V 200MA 2NS DO-35 | 28480 | 1901-0050 |
| A1A3CR2 | 1901-0050 | 3 | | DIODE-SWITCHING 80V 200MA 2NS DO-35 | 28480 | 1901-0050 |
| A1A3CR3 | 1901-0050 | 3 | | DIODE-SWITCHING 80V 200MA 2NS DO-35 | 28480 | 1901-0050 |
| A1A3CR4 | 1901-0050 | 3 | | DIODE-SWITCHING 80V 200MA 2NS DO-35 | 28480 | 1901-0050 |
| A1A3CR5 | 1901-0539 | 3 | | DIODE-SM SIG SCHOTTKY | 28480 | 1901-0539 |
| A1A3CR6 | 1901-0539 | 3 | | DIODE-SM SIG SCHOTTKY | 28480 | 1901-0539 |
| A1A3CR7 | 1901-0050 | 3 | | DIODE-SWITCHING 80V 200MA 2NS DO-35 | 28480 | 1901-0050 |
| A1A3CR8 | 1901-0050 | 3 | | DIODE-SWITCHING 80V 200MA 2NS DO-35 | 28480 | 1901-0050 |
| A1A3CR9 | 1901-0050 | 3 | | DIODE-SWITCHING 80V 200MA 2NS DO-35 | 28480 | 1901-0050 |
| A1A3CR10 | 1901-0050 | 3 | | DIODE-SWITCHING 80V 200MA 2NS DO-35 | 28480 | 1901-0050 |
| A1A3CR11 | 1901-0050 | 3 | | DIODE-SWITCHING 80V 200MA 2NS DO-35 | 28480 | 1901-0050 |
| A1A3CR12 | 1901-0050 | 3 | | DIODE-SWITCHING 80V 200MA 2NS DO-35 | 28480 | 1901-0050 |
| A1A3CR13 | 1901-0050 | 3 | | DIODE-SWITCHING 80V 200MA 2NS DO-35 | 28480 | 1901-0050 |
| A1A3L1 | 9140-0144 | 0 | | INDUCTOR RF-CH-MLD 4.7UH 10% .105DX.26LG | 28480 | 9140-0144 |
| A1A3L2 | 9140-0144 | 0 | | INDUCTOR RF-CH-MLD 4.7UH 10% .105DX.26LG | 28480 | 9140-0144 |
| A1A3L3 | 9140-0144 | 0 | | INDUCTOR RF-CH-MLD 4.7UH 10% .105DX.26LG | 28480 | 9140-0144 |
| A1A3MP1 | 1480-0073 | 6 | | PIN-ROLL .062-IN-DIA .25-IN-LG BE-CU | 28480 | 1480-0073 |
| A1A3MP2 | 4040-0748 | 3 | 6 | EXTR-PC BD BLK POLYC .062-BD-THKNS | 28480 | 4040-0748 |
| A1A3MP3 | 4040-0751 | 8 | 1 | EXTR-PC BD ORN POLYC .062-BD-THKNS | 28480 | 4040-0751 |
| A1A3Q1 | 1854-0810 | 2 | | TRANSISTOR NPN SI PD=625MW FT=200MHZ | 28480 | 1854-0810 |
| A1A3Q2 | 1855-0327 | 8 | 1 | TRANSISTOR J-FET 2N4416 N-CHAN D-MODE | 01295 | 2N4416 |
| A1A3Q3 | 1854-0830 | 6 | 1 | TRANSISTOR-DUAL NPN PD=500MW | 27014 | LM394 |
| A1A3Q4 | 1854-0810 | 2 | | TRANSISTOR NPN SI PD=625MW FT=200MHZ | 28480 | 1854-0810 |
| A1A3Q5 | 1854-0475 | 5 | | TRANSISTOR-DUAL NPN PD=750MW | 28480 | 1854-0475 |
| A1A3Q6 | 1853-0459 | 3 | | TRANSISTOR PNP SI PD=625MW FT=200MHZ | 28480 | 1853-0459 |
| A1A3Q7 | 1854-0810 | 2 | | TRANSISTOR NPN SI PD=625MW FT=200MHZ | 28480 | 1854-0810 |
| A1A3Q8 | 1855-0414 | 4 | 2 | TRANSISTOR J-FET 2N4393 N-CHAN D-MODE | 04713 | 2N4393 |
| A1A3Q9 | 1854-0810 | 2 | | TRANSISTOR NPN SI PD=625MW FT=200MHZ | 28480 | 1854-0810 |
| A1A3Q10 | 1855-0253 | 9 | | TRANSISTOR J-FET N-CHAN D-MODE TO-92 SI | 28480 | 1855-0253 |
| A1A3Q11 | 1853-0822 | 9 | | TRANSISTOR PNP 2N2946A SI TO-46 PD=400MW | 01295 | 2N2946A |
| A1A3Q12 | 1853-0822 | 9 | | TRANSISTOR PNP 2N2946A SI TO-46 PD=400MW | 01295 | 2N2946A |
| A1A3Q13 | 1853-0316 | 1 | | TRANSISTOR-DUAL PNP PD=500MW | 28480 | 1853-0316 |
| A1A3Q14 | 1854-0810 | 2 | | TRANSISTOR NPN SI PD=625MW FT=200MHZ | 28480 | 1854-0810 |
| A1A3Q15 | 1855-0253 | 9 | | TRANSISTOR J-FET N-CHAN D-MODE TO-92 SI | 28480 | 1855-0253 |
| A1A3R1 | 0757-0346 | 2 | | RESISTOR 10 1% .125W F TC=0+-100 | 24546 | C4-1/8-T0-10R0-F |
| A1A3R2 | 0698-0083 | 8 | | RESISTOR 1.96K 1% .125W F TC=0+-100 | 24546 | C4-1/8-T0-1961-F |
| A1A3R3 | 0698-8812 | 7 | 3 | RESISTOR 1 1% .125W F TC=0+-100 | 28480 | 0698-8812 |
| A1A3R4 | 0698-3101 | 7 | 1 | RESISTOR 2.87K 1% .5W F TC=0+-100 | 28480 | 0698-3101 |
| A1A3R5 | 0757-0421 | 4 | 2 | RESISTOR 825 1% .125W F TC=0+-100 | 24546 | C4-1/8-T0-825R-F |
| A1A3R6 | 0698-7261 | 8 | | RESISTOR 11K 1% .05W F TC=0+-100 | 24546 | C3-1/8-T0-1102-F |
| A1A3R7 | 0757-0458 | 7 | 5 | RESISTOR 51.1K 1% .125W F TC=0+-100 | 24546 | C4-1/8-T0-5112-F |
| A1A3R8 | 0757-0442 | 9 | 14 | RESISTOR 10K 1% .125W F TC=0+-100 | 24546 | C4-1/8-T0-1002-F |
| A1A3R9 | 0698-5808 | 5 | 1 | RESISTOR 4K 1% .125W F TC=0+-100 | 24546 | C4-1/8-T0-4001-F |
| A1A3R10 | 0698-7277 | 6 | | RESISTOR 51.1K 1% .05W F TC=0+-100 | 24546 | C3-1/8-T0-5112-F |

See introduction to this section for ordering information
*Indicates factory selected value
†Backdating information in Section VII



www.valuetronics.com

A1

Table 6-3. Replaceable Parts

| Reference Designation | HP Part Number | C D | Qty | Description | Mfr Code | Mfr Part Number |
|---|---|---|---|---|---|---|
| A1A3R11 | 0757-0416 | 7 | 16 | RESISTOR 511 1% .125W F TC=0+-100 | 24546 | C4-1/8-T0-511R-F |
| A1A3R12 | 2100-2039 | 5 | | RESISTOR-TRMR 20K 5% WW SIDE-ADJ 10-TRN | 28480 | 2100-2039 |
| A1A3R13 | 0698-3447 | 4 | 4 | RESISTOR 422 1% .125W F TC=0+-100 | 24546 | C4-1/8-T0-422R-F |
| A1A3R14 | 0698-3160 | 8 | 7 | RESISTOR 31.6K 1% .125W F TC=0+-100 | 24546 | C4-1/8-T0-3162-F |
| A1A3R15 | 1810-0205 | 7 | 1 | NETWORK-RES 8-SIP4.7K OHM X 7 | 01121 | 208A472 |
| A1A3R16 | 0757-0431 | 6 | 1 | RESISTOR 2.43K 1% .125W F TC=0+-100 | 24546 | C4-1/8-T0-2431-F |
| A1A3R17 | 0698-7238 | 9 | 2 | RESISTOR 1.21K 1% .05W F TC=0+-100 | 24546 | C3-1/8-T0-1211-F |
| A1A3R18 | 0757-0280 | 3 | | RESISTOR 1K 1% .125W F TC=0+-100 | 24546 | C4-1/8-T0-1001-F |
| A1A3R19 | 0757-0442 | 9 | | RESISTOR 10K 1% .125W F TC=0+-100 | 24546 | C4-1/8-T0-1002-F |
| A1A3R20 | 0698-7281 | 2 | 1 | RESISTOR 75K 2% .05W F TC=0+-100 | 24546 | C3-1/8-T0-7502-G |
| A1A3R21 | 0698-7262 | 9 | 1 | RESISTOR 12.1K 1% .05W F TC=0+-100 | 24546 | C3-1/8-T0-1212-F |
| A1A3R22 | 0698-7254 | 9 | 2 | RESISTOR 5.62K 1% .05W F TC=0+-100 | 24546 | C3-1/8-T0-5621-F |
| A1A3R23 | 0757-0441 | 8 | 5 | RESISTOR 8.25K 1% .125W F TC=0+-100 | 24546 | C4-1/8-T0-8251-F |
| A1A3R24 | 0698-4014 | 3 | 1 | RESISTOR 787 1% .125W F TC=0+-100 | 24546 | C4-1/8-T0-787R-F |
| A1A3R25 | 0698-3510 | 2 | 1 | RESISTOR 453 1% .125W F TC=0+-100 | 24546 | C4-1/8-T0-453R-F |
| A1A3R26 | 0698-4414 | 7 | 1 | RESISTOR 158 1% .125W F TC=0+-100 | 24546 | C4-1/8-T0-158R-F |
| A1A3R27 | 0698-7240 | 3 | 1 | RESISTOR 1.47K 1% .05W F TC=0+-100 | 24546 | C3-1/8-T0-1471-F |
| A1A3R28 | 0698-3485 | 2 | 1 | RESISTOR 866 1% .125W F TC=0+-100 | 24546 | C4-1/8-T0-866R-F |
| A1A3R29 | 0698-3151 | 7 | 3 | RESISTOR 2.87K 1% .125W F TC=0+-100 | 24546 | C4-1/8-T0-2871-F |
| A1A3R30 | 0757-0441 | 8 | | RESISTOR 8.25K 1% .125W F TC=0+-100 | 24546 | C4-1/8-T0-8251-F |
| A1A3R31 | 2100-3351 | 6 | 2 | RESISTOR-TRMR 500 10% C SIDE-ADJ 1-TRN | 28480 | 2100-3351 |
| A1A3R32 | 0757-0317 | 7 | | RESISTOR 1.33K 1% .125W F TC=0+-100 | 24546 | C4-1/8-T0-1331-F |
| A1A3R33 | 0698-7222 | 1 | | RESISTOR 261 1% .05W F TC=0+-100 | 24546 | C3-1/8-T0-261R-F |
| A1A3R34 | 0698-7222 | 1 | | RESISTOR 261 1% .05W F TC=0+-100 | 24546 | C3-1/8-T0-261R-F |
| A1A3R35 | 0757-0441 | 8 | | RESISTOR 8.25K 1% .125W F TC=0+-100 | 24546 | C4-1/8-T0-8251-F |
| A1A3R36 | 0698-7244 | 7 | | RESISTOR 2.15K 1% .05W F TC=0+-100 | 24546 | C3-1/8-T0-2151-F |
| A1A3R37 | 0698-7254 | 9 | | RESISTOR 5.62K 1% .05W F TC=0+-100 | 24546 | C3-1/8-T0-5621-F |
| A1A3R38 | 0757-0456 | 7 | | RESISTOR 51.1K 1% .125W F TC=0+-100 | 24546 | C4-1/8-T0-5112-F |
| A1A3R39 | 0698-7277 | 6 | | RESISTOR 51.1K 1% .05W F TC=0+-100 | 24546 | C3-1/8-T0-5112-F |
| A1A3R40 | 0698-7277 | 6 | | RESISTOR 51.1K 1% .05W F TC=0+-100 | 24546 | C3-1/8-T0-5112-F |
| A1A3R41 | 0757-0439 | 4 | 2 | RESISTOR 6.81K 1% .125W F TC=0+-100 | 24546 | C4-1/8-T0-6811-F |
| A1A3R42 | 0698-0083 | 8 | | RESISTOR 1.96K 1% .125W F TC=0+-100 | 24546 | C4-1/8-T0-1961-F |
| A1A3R43 | 2100-3353 | 8 | | RESISTOR-TRMR 20K 10% C SIDE-ADJ 1-TRN | 28480 | 2100-3353 |
| A1A3R44 | 0698-0083 | 8 | | RESISTOR 1.96K 1% .125W F TC=0+-100 | 24546 | C4-1/8-T0-1961-F |
| A1A3R45 | 0698-3450 | 9 | 5 | RESISTOR 42.2K 1% .125W F TC=0+-100 | 24546 | C4-1/8-T0-4222-F |
| A1A3R46 | 0757-0438 | 3 | | RESISTOR 5.11K 1% .125W F TC=0+-100 | 24546 | C4-1/8-T0-5111-F |
| A1A3R47 | 0698-3456 | 5 | 1 | RESISTOR 287K 1% .125W F TC=0+-100 | 24546 | C4-1/8-T0-2873-F |
| A1A3R48 | 0698-3447 | 4 | | RESISTOR 422 1% .125W F TC=0+-100 | 24546 | C4-1/8-T0-422R-F |
| A1A3R49 | 0698-0083 | 8 | | RESISTOR 1.96K 1% .125W F TC=0+-100 | 24546 | C4-1/8-T0-1961-F |
| A1A3R50 | 0757-0447 | 4 | 3 | RESISTOR 16.2K 1% .125W F TC=0+-100 | 24546 | C4-1/8-T0-1622-F |
| A1A3R51 | 2100-3352 | 7 | 1 | RESISTOR-TRMR 1K 10% C SIDE-ADJ 1-TRN | 28480 | 2100-3352 |
| A1A3R52 | 0757-0317 | 7 | | RESISTOR 1.33K 1% .125W F TC=0+-100 | 24546 | C4-1/8-T0-1331-F |
| A1A3R53 | 0698-7212 | 9 | | RESISTOR 100 1% .05W F TC=0+-100 | 24546 | C3-1/8-T0-100R-F |
| A1A3R54 | 0698-7212 | 9 | | RESISTOR 100 1% .05W F TC=0+-100 | 24546 | C3-1/8-T0-100R-F |
| A1A3R55 | 0757-0317 | 7 | | RESISTOR 1.33K 1% .125W F TC=0+-100 | 24546 | C4-1/8-T0-1331-F |
| A1A3R56 | 0698-7268 | 5 | 1 | RESISTOR 21.5K 1% .05W F TC=0+-100 | 24546 | C3-1/8-T0-2152-F |
| A1A3R57 | 0698-3157 | 3 | 4 | RESISTOR 19.6K 1% .125W F TC=0+-100 | 24546 | C4-1/8-T0-1962-F |
| A1A3R58 | 0757-0274 | 5 | | RESISTOR 1.21K 1% .125W F TC=0+-100 | 24546 | C4-1/8-T0-1211-F |
| A1A3R59 | 0757-0280 | 3 | | RESISTOR 1K 1% .125W F TC=0+-100 | 24546 | C4-1/8-T0-1001-F |
| A1A3R60 | 0698-3158 | 4 | 2 | RESISTOR 23.7K 1% .125W F TC=0+-100 | 24546 | C4-1/8-T0-2372-F |
| A1A3R61 | 0698-7270 | 9 | | RESISTOR 26.1K 1% .05W F TC=0+-100 | 24546 | C3-1/8-T0-2612-F |
| A1A3R62 | 0698-7270 | 9 | | RESISTOR 26.1K 1% .05W F TC=0+-100 | 24546 | C3-1/8-T0-2612-F |
| A1A3R63 | 0698-3458 | 7 | 1 | RESISTOR 348K 1% .125W F TC=0+-100 | 28480 | 0698-3458 |
| A1A3R64 | 0698-3236 | 9 | 2 | RESISTOR 15K .25% .125W F TC=0+-50 | 28480 | 0698-3236 |
| A1A3R65 | 0698-7212 | 9 | | RESISTOR 100 1% .05W F TC=0+-100 | 24546 | C3-1/8-T0-100R-F |
| A1A3R66 | 0698-7212 | 9 | | RESISTOR 100 1% .05W F TC=0+-100 | 24546 | C3-1/8-T0-100R-F |
| A1A3R67 | 0698-3155 | 1 | 2 | RESISTOR 4.64K 1% .125W F TC=0+-100 | 24546 | C4-1/8-T0-4641-F |
| A1A3R68 | 0698-7933 | 1 | 1 | RESISTOR 3.83K .1% .125W F TC=0+-25 | 19701 | MF4C1/8-T9-3831-B |
| A1A3R69 | 0698-3445 | 2 | 1 | RESISTOR 348 1% .125W F TC=0+-100 | 24546 | C4-1/8-T0-348R-F |
| A1A3R70 | 0757-0401 | 0 | 13 | RESISTOR 100 1% .125W F TC=0+-100 | 24546 | C4-1/8-T0-101-F |
| A1A3R71 | 0698-3236 | 9 | | RESISTOR 15K ...% .125W F TC=0+ 50 | 28480 | 0698-3236 |
| A1A3R72 | 2100-3109 | 2 | 1 | RESISTOR-TRMR 2K 10% C SIDE-ADJ 17-TRN | 02111 | 43P202 |
| A1A3R73 | 0698-7252 | 7 | | RESISTOR 4.64K 1% .05W F TC=0+-100 | 24546 | C3-1/8-T0-4641-F |
| A1A3R74 | 0698-7243 | 6 | | RESISTOR 1.96K 1% .05W F TC=0+-100 | 24546 | C3-1/8-T0-1961-F |
| A1A3R75 | 0698-7260 | 7 | | RESISTOR 10K 1% .05W F TC=0+-100 | 24546 | C3-1/8-T0-1002-F |

See introduction to this section for ordering information
*Indicates factory selected value
†Backdating information in Section VII



www.valuetronics.com

A1

Table 6-3. Replaceable Parts

| Reference Designation | HP Part Number | C D | Qty | Description | Mfr Code | Mfr Part Number |
|---|---|---|---|---|---|---|
| A1A3R76 | 0698-7277 | 6 | | RESISTOR 51.1K 1% .05W F TC=0+-100 | 24546 | C3-1/8-T0-5112-F |
| A1A3R77 | 0698-7255 | 0 | 1 | RESISTOR 6.19K 1% .05W F TC=0+-100 | 24546 | C3-1/8-T0-6191-F |
| A1A3R78 | 0698-7277 | 6 | | RESISTOR 51.1K 1% .05W F TC=0+-100 | 24546 | C3-1/8-T0-5112-F |
| A1A3R79 | 0757-0402 | 1 | 2 | RESISTOR 110 1% .125W F TC=0+-100 | 24546 | C4-1/8-T0-111-F |
| A1A3R80 | 0698-3157 | 3 | | RESISTOR 19.6K 1% .125W F TC=0+-100 | 24546 | C4-1/8-T0-1962-F |
| A1A3R81 | 0698-8466 | 7 | 1 | RESISTOR 942 .5% .125W F TC=0+-50 | 28480 | 0698-8466 |
| A1A3R82 | 0757-0317 | 7 | | RESISTOR 1.33K 1% .125W F TC=0+-100 | 24546 | C4-1/8-T0-1331-F |
| A1A3R83 | 2100-3350 | 5 | 1 | RESISTOR-TRMR 200 10% C SIDE-ADJ 1-TRN | 28480 | 2100-3350 |
| A1A3R84 | 0757-0465 | 6 | 3 | RESISTOR 100K 1% .125W F TC=0+-100 | 24546 | C4-1/8-T0-1003-F |
| A1A3R85 | 0698-7260 | 7 | | RESISTOR 10K 1% .05W F TC=0+-100 | 24546 | C3-1/8-T0-1002-F |
| A1A3R86 | 0698-0083 | 8 | | RESISTOR 1.96K 1% .125W F TC=0+-100 | 24546 | C4-1/8-T0-1961-F |
| A1A3R87 | 0757-0464 | 5 | 2 | RESISTOR 90.9K 1% .125W F TC=0+-100 | 24546 | C4-1/8-T0-9092-F |
| A1A3R88 | 0698-8827 | 4 | | RESISTOR 1M 1% .125W F TC=0+-100 | 28480 | 0698-8827 |
| A1A3R89 | 0698-7284 | 5 | | RESISTOR 100K 1% .05W F TC=0+-100 | 24546 | C3-1/8-T0-1003-F |
| A1A3R90 | 0698-7260 | 7 | | RESISTOR 10K 1% .05W F TC=0+-100 | 24546 | C3-1/8-T0-1002-F |
| A1A3R91 | 0757-0438 | 3 | | RESISTOR 5.11K 1% .125W F TC=0+-100 | 24546 | C4-1/8-T0-5111-F |
| A1A3R92 | 0698-7206 | 1 | 1 | RESISTOR 56.2 1% .05W F TC=0+-100 | 24546 | C3-1/8-T0-56R2-F |
| A1A3R93 | 0757-0394 | 0 | 2 | RESISTOR 51.1 1% .125W F TC=0+-100 | 24546 | C4-1/8-T0-51R1-F |
| A1A3R94 | 2100-2574 | 3 | 5 | RESISTOR-TRMR 500 10% C SIDE-ADJ 1-TRN | 30983 | ET50X501 |
| A1A3R95 | 0698-7277 | 6 | | RESISTOR 51.1K 1% .05W F TC=0+-100 | 24546 | C3-1/8-T0-5112-F |
| A1A3R96 | 0698-7212 | 9 | | RESISTOR 100 1% .05W F TC=0+-100 | 24546 | C3-1/8-T0-100R-F |
| A1A3R97 | 0698-3447 | 4 | | RESISTOR 422 1% .125W F TC=0+-100 | 24546 | C4-1/8-T0-422R-F |
| A1A3RT1 | 0837-0295 | 0 | 1 | THERMISTOR TUB WITH AXL LEADS 2.7K-OHM | 28480 | 0837-0295 |
| A1A3RT2 | | | | NOT ASSIGNED | | |
| A1A3TP1 | 1251-0600 | 0 | 32 | CONNECTOR-SGL CONT PIN 1.14-MM-BSC-SZ SQ | 28480 | 1251-0600 |
| A1A3TP2 | 1251-0600 | 0 | | CONNECTOR-SGL CONT PIN 1.14-MM-BSC-SZ SQ | 28480 | 1251-0600 |
| A1A3TP3 | 1251-0600 | 0 | | CONNECTOR-SGL CONT PIN 1.14-MM-BSC-SZ SQ | 28480 | 1251-0600 |
| A1A3TP4 | 1251-0600 | 0 | | CONNECTOR-SGL CONT PIN 1.14-MM-BSC-SZ SQ | 28480 | 1251-0600 |
| A1A3TP5 | 1251-0600 | 0 | | CONNECTOR-SGL CONT PIN 1.14-MM-BSC-SZ SQ | 28480 | 1251-0600 |
| A1A3U1 | 1826-0059 | 2 | 5 | IC OP AMP GP TO-99 PKG | 01295 | LM201AL |
| A1A3U2 | 1826-0600 | 9 | 1 | IC OP AMP LOW-BIAS-H-IMPD QUAD 14-DIP-P | 01295 | TL074ACN |
| A1A3U3 | 1826-0520 | 2 | 2 | IC OP AMP LOW-BIAS-H-IMPD 8-DIP-P PKG | 01295 | TL071BCP |
| A1A3U4 | 1826-0501 | 9 | 1 | IC MULTIPLXR 2-CHAN-ANLG TRIPLE 16-DIP-P | 04713 | MC14053BCP |
| A1A3U5 | 1826-0413 | 2 | 4 | IC OP AMP LOW-BIAS-H-IMPD TO-99 PKG | 34371 | HA2-2605-5 |
| A1A3U6 | 1826-0413 | 2 | | IC OP AMP LOW-BIAS-H-IMPD TO-99 PKG | 34371 | HA2-2605-5 |
| A1A3U7 | 1820-0125 | 1 | 1 | IC COMPARATOR GP DUAL TO-100 PKG | 07263 | 711HC |
| A1A3U8 | 1826-0582 | 6 | 8 | IC SWITCH ANLG QUAD 16-DIP-C PKG | 27014 | LF13201D |
| A1A3U9 | 1826-0413 | 2 | | IC OP AMP LOW-BIAS-H-IMPD TO-99 PKG | 34371 | HA2-2605-5 |
| A1A3U10 | 1820-1445 | 0 | | IC LCH TTL LS 4-BIT | 01295 | SN74LS375N |
| A1A3U11 | 1820-1445 | 0 | | IC LCH TTL LS 4-BIT | 01295 | SN74LS375N |
| A1A3U12 | 1826-0520 | 2 | | IC OP AMP LOW-BIAS-H-IMPD 8-DIP-P PKG | 01295 | TL071BCP |
| A1A3U13 | 1826-0413 | 2 | | IC OP AMP LOW-BIAS-H-IMPD TO-99 PKG | 34371 | HA2-2605-5 |
| A1A3U14 | 1826-0471 | 2 | | IC OP AMP LOW-DRIFT TO-99 PKG | 28480 | 1826-0471 |
| A1A3U15 | 1826-0059 | 2 | | IC OP AMP GP TO-99 PKG | 01295 | LM201AL |
| A1A3VR1 | 1902-0951 | 5 | | DIODE-ZNR 5.1V 5% DO-35 PD=.4W TC=+.035% | 28480 | 1902-0951 |
| A1A3VR2 | 1902-0962 | 8 | 2 | DIODE-ZNR 15V 5% DO-35 PD=.4W TC=+.087% | 28480 | 1902-0962 |
| A1A3VR3 | 1902-0961 | 7 | 1 | DIODE-ZNR 13V 5% DO-35 PD=.4W TC=+.082% | 28480 | 1902-0961 |
| A1A3VR4 | 1902-0948 | 0 | 4 | DIODE-ZNR 3.9V 5% DO-35 PD=.4W TC=-.012% | 28480 | 1902-0948 |
| A1A3VR5 | 1902-0948 | 0 | | DIODE-ZNR 3.9V 5% DO-35 PD=.4W TC=-.012% | 28480 | 1902-0948 |
| A1A3VR6 | 1902-0948 | 0 | | DIODE-ZNR 3.9V 5% DO-35 PD=.4W TC=-.012% | 28480 | 1902-0948 |
| A1A3VR7 | 1902-0951 | 5 | | DIODE-ZNR 5.1V 5% DO-35 PD=.4W TC=+.035% | 28480 | 1902-0951 |
| A1A3VR8 | 1902-0954 | 8 | 1 | DIODE-ZNR 6.8V 5% DO-35 PD=.4W TC=+.057% | 28480 | 1902-0954 |
| A1A3VR9 | 1902-0950 | 4 | 1 | DIODE-ZNR 4.7V 5% DO-35 PD=.4W TC=+.025% | 28480 | 1902-0950 |
| A1A4 | 08673-60117 | 1 | 1 | ED AY PULSE DRVR | 28480 | 08673-60117 |
| A1A4C1 | 0180-0116 | 1 | 4 | CAPACITOR-FXD 6.8UF+-10% 35VDC TA | 56289 | 150D685X9035B2 |
| A1A4C2 | 0180-1746 | 5 | 5 | CAPACITOR-FXD 15UF+-10% 20VDC TA | 56289 | 150D156X9020B2 |
| A1A4C3 | 0160-3878 | 6 | | CAPACITOR-FXD 1000PF +-20% 100VDC CER | 28480 | 0160-3878 |
| A1A4C4 | 0160-0576 | 5 | | CAPACITOR-FXD .1UF +-20% 50VDC CER | 28480 | 0160-0576 |
| A1A4C5 | 0180-0229 | 7 | 2 | CAPACITOR-FXD 33UF+-10% 10VDC TA | 56289 | 150D336X9010B2 |
| A1A4C6 | 0160-0174 | 9 | | CAPACITOR-FXD .47UF +80-20% 25VDC CER | 28480 | 0160-0174 |
| A1A4C7 | 0170-0040 | 9 | 1 | CAPACITOR-FXD .047UF +-10% 200VDC POLYE | 56289 | 292P47392 |
| A1A4C8 | 0160-3879 | 7 | | CAPACITOR-FXD .01UF +-20% 100VDC CER | 28480 | 0160-3879 |
| A1A4C9 | 0160-0576 | 5 | | CAPACITOR-FXD .1UF +-20% 50VDC CER | 28480 | 0160-0576 |
| A1A4C10 | 0160-0174 | 9 | | CAPACITOR-FXD .47UF +80-20% 25VDC CER | 28480 | 0160-0174 |

See introduction to this section for ordering information
*Indicates factory selected value
†Backdating information in Section VII



www.valuetronics.com

Table 6-3. Replaceable Parts

| Reference Designation | HP Part Number | C D | Qty | Description | Mfr Code | Mfr Part Number |
|---|---|---|---|---|---|---|
| A1A4C11 | 0160-0174 | 9 | | CAPACITOR-FXD .47UF +80-20% 25VDC CER | 28480 | 0160-0174 |
| A1A4C12 | 0160-0576 | 5 | | CAPACITOR-FXD .1UF +-20% 50VDC CER | 28480 | 0160-0576 |
| A1A4C13 | 0160-0576 | 5 | | CAPACITOR-FXD .1UF +-20% 50VDC CER | 28480 | 0160-0576 |
| A1A4C14 | 0160-0576 | 5 | | CAPACITOR-FXD .1UF +-20% 50VDC CER | 28480 | 0160-0576 |
| A1A4C15 | 0160-0576 | 5 | | CAPACITOR-FXD .1UF +-20% 50VDC CER | 28480 | 0160-0576 |
| A1A4C16 | 0160-0174 | 9 | | CAPACITOR-FXD .47UF +80-20% 25VDC CER | 28480 | 0160-0174 |
| A1A4C17 | 0160-0576 | 5 | | CAPACITOR-FXD .1UF +-20% 50VDC CER | 28480 | 0160-0576 |
| A1A4C18 | 0160-0576 | 5 | | CAPACITOR-FXD .1UF +-20% 50VDC CER | 28480 | 0160-0576 |
| A1A4C19 | 0160-0576 | 5 | | CAPACITOR-FXD .1UF +-20% 50VDC CER | 28480 | 0160-0576 |
| A1A4C20 | 0160-0174 | 9 | | CAPACITOR-FXD .47UF +80-20% 25VDC CER | 28480 | 0160-0174 |
| A1A4C21 | 0160-0576 | 5 | | CAPACITOR-FX. .1UF +-20% 50VDC CER | 28480 | 0160-0576 |
| A1A4C22 | 0160-4031 | 5 | | CAPACITOR-FXD 330PF +-5% 100VDC CER | 28480 | 0160-4031 |
| A1A4C23 | 0160-4350 | 1 | 2 | CAPACITOR-FXD 68PF +-5% 200VDC CER 0+-30 | 28480 | 0160-4350 |
| A1A4C24 | 0160-0573 | 2 | | CAPACITOR-FXD 4700PF +-20% 100VDC CER | 28480 | 0160-0573 |
| A1A4C25 | 0160-4387 | 4 | 8 | CAPACITOR-FXD 47PF +-5% 200VDC CER 0+-30 | 28480 | 0160-4387 |
| A1A4C26 | 0160-4389 | 6 | 2 | CAPACITOR-FXD 100PF +-5PF 200VDC CER | 28480 | 0160-4389 |
| A1A4C27 | 0160-4350 | 1 | | CAPACITOR-FXD 68PF +-5% 200VDC CER 0+-30 | 28480 | 0160-4350 |
| A1A4C28 | 0160-4520 | 7 | 1 | CAPACITOR-FXD 11PF +-5% 200VDC CER 0+-30 | 28480 | 0160-4520 |
| A1A4C29 | 0160-2257 | 3 | 3 | CAPACITOR-FXD 10PF +-5% 500VDC CER 0+-60 | 28480 | 0160-2257 |
| A1A4C30 | 0160-4389 | 6 | | CAPACITOR-FXD 100PF +-5PF 200VDC CER | 28480 | 0160-4389 |
| A1A4C31 | 0160-4387 | 4 | | CAPACITOR-FXD 47PF +-5% 200VDC CER 0+-30 | 28480 | 0160-4387 |
| A1A4C32 | 0160-2266 | 4 | 2 | CAPACITOR-FXD 24PF +-5% 500VDC CER 0+-30 | 28480 | 0160-2266 |
| A1A4C33 | 0160-3874 | 2 | 1 | CAPACITOR-FXD 10PF +-.5PF 200VDC CER | 28480 | 0160-3874 |
| A1A4C34 | 0160-2257 | 3 | | CAPACITOR-FXD 10PF +-5% 500VDC CER 0+-60 | 28480 | 0160-2257 |
| A1A4C35 | 0160-2266 | 4 | | CAPACITOR-FXD 24PF +-5% 500VDC CER 0+-30 | 28480 | 0160-2266 |
| A1A4C36 | 0180-0374 | 3 | | CAPACITOR-FXD 10UF+-10% 20VDC TA | 56289 | 150D106X9020B2 |
| A1A4C37 | 0160-2259 | 5 | 1 | CAPACITOR-FXD 12PF +-5% 500VDC CER 0+-30 | 28480 | 0160-2259 |
| A1A4C38 | 0160-2199 | 2 | 1 | CAPACITOR-FXD 30PF +-5% 300VDC MICA | 28480 | 0160-2199 |
| A1A4C39 | 0160-0576 | 5 | | CAPACITOR-FXD .1UF +-20% 50VDC CER | 28480 | 0160-0576 |
| A1A4C40 | 0160-0576 | 5 | | CAPACITOR-FXD .1UF +-20% 50VDC CER | 28480 | 0160-0576 |
| A1A4C41 | 0160-2257 | 3 | | CAPACITOR-FXD 10PF +-5% 500VDC CER 0+-60 | 28480 | 0160-2257 |
| A1A4C42 | 0160-4103 | 2 | 2 | CAPACITOR-FXD 220PF +-5% 100VDC CER | 72982 | 8121-M100-C0G-221J |
| A1A4C43 | 0160-3875 | 3 | 4 | CAPACITOR-FXD 22PF +-5% 200VDC CER 0+-30 | 28480 | 0160-3875 |
| A1A4C44 | 0160-2220 | 0 | 1 | CAPACITOR-FXD 1200PF +-5% 300VDC MICA | 28480 | 0160-2220 |
| A1A4C45 | 0160-3537 | 4 | 1 | CAPACITOR-FXD 680PF +-5% 100VDC MICA | 28480 | 0160-3537 |
| A1A4C46 | 0180-0116 | 1 | | CAPACITOR-FXD 6.8UF+-10% 35VDC TA | 56289 | 150D685X9035B2 |
| A1A4C47 | 0180-0116 | 1 | | CAPACITOR-FXD 6.8UF+-10% 35VDC TA | 56289 | 150D685X9035B2 |
| A1A4C48 | 0160-2265 | 3 | | CAPACITOR-FXD 22PF +-5% 500VDC CER 0+-30 | 28480 | 0160-2265 |
| A1A4C49 | 0160-3875 | 3 | | CAPACITOR-FXD 22PF +-5% 200VDC CER 0+-30 | 28480 | 0160-3875 |
| A1A4CR1 | 1901-0539 | 3 | | DIODE-SM SIG SCHOTTKY | 28480 | 1901-0539 |
| A1A4CR2 | 1901-0539 | 3 | | DIODE-SM SIG SCHOTTKY | 28480 | 1901-0539 |
| A1A4CR3 | 1901-0539 | 3 | | DIODE-SM SIG SCHOTTKY | 28480 | 1901-0539 |
| A1A4CR4 | 1901-0539 | 3 | | DIODE-SM SIG SCHOTTKY | 28480 | 1901-0539 |
| A1A4CR5 | 1901-0539 | 3 | | DIODE-SM SIG SCHOTTKY | 28480 | 1901-0539 |
| A1A4CR6 | 1901-0179 | 7 | 1 | DIODE-SWITCHING 15V 50MA 750PS DO-7 | 28480 | 1901-0179 |
| A1A4CR7 | 1901-0539 | 3 | | DIODE-SM SIG SCHOTTKY | 28480 | 1901-0539 |
| A1A4CR8 | 1901-0539 | 3 | | DIODE-SM SIG SCHOTTKY | 28480 | 1901-0539 |
| A1A4CR9 | 1901-0539 | 3 | | DIODE-SM SIG SCHOTTKY | 28480 | 1901-0539 |
| A1A4CR10 | 1901-0539 | 3 | | DIODE-SM SIG SCHOTTKY | 28480 | 1901-0539 |
| A1A4CR11 | 1901-0539 | 3 | | DIODE-SM SIG SCHOTTKY | 28480 | 1901-0539 |
| A1A4CR12 | 1901-0539 | 3 | | DIODE-SM SIG SCHOTTKY | 28480 | 1901-0539 |
| A1A4CR13 | 1901-0539 | 3 | | DIODE-SM SIG SCHOTTKY | 28480 | 1901-0539 |
| A1A4CR14 | 1901-0539 | 3 | | DIODE-SM SIG SCHOTTKY | 28480 | 1901-0539 |
| A1A4CR15 | 1901-0539 | 3 | | DIODE-SM SIG SCHOTTKY | 28480 | 1901-0539 |
| A1A4CR16 | 1901-0539 | 3 | | DIODE-SM SIG SCHOTTKY | 28480 | 1901-0539 |
| A1A4CR17 | 1901-0539 | 3 | | DIODE-SM SIG SCHOTTKY | 28480 | 1901-0539 |
| A1A4CR18 | 1901-0539 | 3 | | DIODE-SM SIG SCHOTTKY | 28480 | 1901-0539 |
| A1A4CR19 | 1901-0539 | 3 | | DIODE-SM SIG SCHOTTKY | 28480 | 1901-0539 |
| A1A4D1* | 08673-80021 | 8 | 1 | DELAY LINE 5NS | 28480 | 08673-80021 |
| A1A4D1* | 08673-80023 | 0 | 1 | DELAY LINE 5NS | 28480 | 08673-80023 |
| A1A4D2* | 08673-80022 | 9 | 1 | DELAY LINE 10NS | 28480 | 08673-80022 |
| A1A4D2* | 08673-80024 | 1 | 1 | DELAY LINE 10NS | 28480 | 08673-80024 |
| A1A4J1 | 1250-1377 | 8 | 2 | CONNECTOR-RF SMB M PC 50-OHM | 28480 | 1250-1377 |
| A1A4J2 | 1250-0836 | 2 | 1 | CONNECTOR-RF SMC M PC 50-OHM | 28480 | 1250-0836 |
| A1A4J3 | 1250-1377 | 8 | | CONNECTOR-RF SMB M PC 50-OHM | 28480 | 1250-1377 |

See introduction to this section for ordering information
*Indicates factory selected value
†Backdating information in Section VII



www.valuetronics.com

A1

Table 6-3. Replaceable Parts

| Reference Designation | HP Part Number | C D | Qty | Description | Mfr Code | Mfr Part Number |
|---|---|---|---|---|---|---|
| A1A4L1 | 9100-1618 | 1 | 2 | INDUCTOR RF-CH-MLD 5.6UH 10% | 28480 | 9100-1618 |
| A1A4L2 | 9100-1618 | 1 | | INDUCTOR RF-CH-MLD 5.6UH 10% | 28480 | 9100-1618 |
| A1A4L3 | 9140-0142 | 8 | 1 | INDUCTOR RF-CH-MLD 2.2UH 10% .105DX.26LG | 28480 | 9140-0142 |
| A1A4L4 | 9100-2261 | 2 | 1 | INDUCTOR RF-CH-MLD 2.7UH 10% .105DX.26LG | 28480 | 9100-2261 |
| A1A4L5 | 9140-0158 | 6 | 1 | INDUCTOR RF-CH-MLD 1UH 10% .105DX.26LG | 28480 | 9140-0158 |
| A1A4MP1 | 1480-0073 | 6 | | PIN-ROLL .062-IN-DIA .25-IN-LG BE-CU | 28480 | 1480-0073 |
| A1A4MP2 | 4040-0748 | 3 | | EXTR-PC BD BLK POLYC .062-BD-THKNS | 28480 | 4040-0748 |
| A1A4MP3 | 4040-0752 | 9 | 1 | EXTR-PC BD YEL POLYC .062-BD-THKNS | 28480 | 4040-0752 |
| A1A4MP4 | 0340-1098 | 0 | 1 | INSULATOR-IC 8-NITRIDE | 28480 | 0340-1098 |
| A1A4Q1 | 1853-0405 | 9 | | TRANSISTOR PNP SI PD=300MW FT=850MHZ | 04713 | 2N4209 |
| A1A4Q2 | 1853-0405 | 9 | | TRANSISTOR PNP SI PD=300MW FT=850MHZ | 04713 | 2N4209 |
| A1A4Q3 | 1854-0809 | 9 | 9 | TRANSISTOR NPN 2N2369A SI TO-18 PD=360MW | 28480 | 1854-0809 |
| A1A4Q4 | 1854-0809 | 9 | | TRANSISTOR NPN 2N2369A SI TO-18 PD=360MW | 28480 | 1854-0809 |
| A1A4Q5 | 1854-0809 | 9 | | TRANSISTOR NPN 2N2369A SI TO-18 PD=360MW | 28480 | 1854-0809 |
| A1A4Q6 | 1853-0405 | 9 | | TRANSISTOR PNP SI PD=300MW FT=850MHZ | 04713 | 2N4209 |
| A1A4Q7 | 1853-0405 | 9 | | TRANSISTOR PNP SI PD=300MW FT=850MHZ | 04713 | 2N4209 |
| A1A4Q8 | 1853-0405 | 9 | | TRANSISTOR PNP SI PD=300MW FT=850MHZ | 04713 | 2N4209 |
| A1A4Q9 | 1853-0405 | 9 | | TRANSISTOR PNP SI PD=300MW FT=850MHZ | 04713 | 2N4209 |
| A1A4Q10 | 1854-0809 | 9 | | TRANSISTOR NPN 2N2369A SI TO-18 PD=360MW | 28480 | 1854-0809 |
| A1A4Q11 | 1854-0809 | 9 | | TRANSISTOR NPN 2N2369A SI TO-18 PD=360MW | 28480 | 1854-0809 |
| A1A4Q12 | 1854-0809 | 9 | | TRANSISTOR NPN 2N2369A SI TO-18 PD=360MW | 28480 | 1854-0809 |
| A1A4Q13 | 1853-0405 | 9 | | TRANSISTOR PNP SI PD=300MW FT=850MHZ | 04713 | 2N4209 |
| A1A4Q14 | 1854-0810 | 2 | | TRANSISTOR NPN SI PD=625MW FT=200MHZ | 28480 | 1854-0810 |
| A1A4Q15 | 1853-0405 | 9 | | TRANSISTOR PNP SI PD=300MW FT=850MHZ | 04713 | 2N4209 |
| A1A4R1 | 0698-3430 | 5 | | RESISTOR 21.5 1% .125W F TC=0+-100 | 03888 | PME55-1/8-T0-21R5-F |
| A1A4R2 | 0698-8812 | 7 | | RESISTOR 1 1% .125W F TC=0+-100 | 28480 | 0698-8812 |
| A1A4R3 | 0698-8812 | 7 | | RESISTOR 1 1% .125W F TC=0+-100 | 28480 | 0698-8812 |
| A1A4R4 | 0698-3429 | 2 | 1 | RESISTOR 19.6 1% .125W F TC=0+-100 | 03888 | PME55-1/8-T0-19R6-F |
| A1A4R5 | 0757-1000 | 7 | 1 | RESISTOR 51.1 1% .5W F TC=0+-100 | 28480 | 0757-1000 |
| A1A4R6 | 0757-0401 | 0 | | RESISTOR 100 1% .125W F TC=0+-100 | 24546 | C4-1/8-T0-101-F |
| A1A4R7 | 1810-0204 | 6 | 1 | NETWORK-RES 8-SIP1.0K OHM X 7 | 01121 | 208A102 |
| A1A4R8 | 0757-0416 | 7 | | RESISTOR 511 1% .125W F TC=0+-100 | 24546 | C4-1/8-T0-511R-F |
| A1A4R9 | 2100-3759 | 8 | 1 | RESISTOR-TRMR 2K 10% C SIDE-ADJ 17-TRN | 28480 | 2100-3759 |
| A1A4R10 | 0757-0416 | 7 | | RESISTOR 511 1% .125W F TC=0+-100 | 24546 | C4-1/8-T0-511R-F |
| A1A4R11 | 0757-0280 | 3 | | RESISTOR 1K 1% .125W F TC=0+-100 | 24546 | C4-1/8-T0-1001-F |
| A1A4R12 | 0698-3450 | 9 | | RESISTOR 42.2K 1% .125W F TC=0+-100 | 24546 | C4-1/8-T0-4222-F |
| A1A4R13 | 0757-0280 | 3 | | RESISTOR 1K 1% .125W F TC=0+-100 | 24546 | C4-1/8-T0-1001-F |
| A1A4R14 | 0757-0280 | 3 | | RESISTOR 1K 1% .125W F TC=0+-100 | 24546 | C4-1/8-T0-1001-F |
| A1A4R15 | 0757-0438 | 3 | | RESISTOR 5.11K 1% .125W F TC=0+-100 | 24546 | C4-1/8-T0-5111-F |
| A1A4R16 | 0698-3132 | 4 | 2 | RESISTOR 261 1% .125W F TC=0+-100 | 24546 | C4-1/8-T0-2610-F |
| A1A4R17 | 0757-0280 | 3 | | RESISTOR 1K 1% .125W F TC=0+-100 | 24546 | C4-1/8-T0-1001-F |
| A1A4R18 | 0757-0274 | 5 | | RESISTOR 1.21K 1% .125W F TC=0+-100 | 24546 | C4-1/8-T0-1211-F |
| A1A4R19 | 2100-2413 | 9 | 1 | RESISTOR-TRMR 200 10% C SIDE-ADJ 1-TRN | 30983 | ET50X201 |
| A1A4R20 | 0698-3444 | 1 | 2 | RESISTOR 316 1% .125W F TC=0+-100 | 24546 | C4-1/8-T0-316R-F |
| A1A4R21 | 0757-0280 | 3 | | RESISTOR 1K 1% .125W F TC=0+-100 | 24546 | C4-1/8-T0-1001-F |
| A1A4R22 | 0757-0280 | 3 | | RESISTOR 1K 1% .125W F TC=0+-100 | 24546 | C4-1/8-T0-1001-F |
| A1A4R23 | 0757-0420 | 3 | 1 | RESISTOR 750 1% .125W F TC=0+-100 | 24546 | C4-1/8-T0-751-F |
| A1A4R24 | 0757-0419 | 0 | | RESISTOR 681 1% .125W F TC=0+-100 | 24546 | C4-1/8-T0-681R-F |
| A1A4R25 | 2100-2574 | 3 | | RESISTOR-TRMR 500 10% C SIDE-ADJ 1-TRN | 30983 | ET50X501 |
| A1A4R26 | 0698-3160 | 6 | | RESISTOR 31.6K 1% .125W F TC=0+-100 | 24546 | C4-1/8-T0-3162-F |
| A1A4R27 | 0757-0280 | 3 | | RESISTOR 1K 1% .125W F TC=0+-100 | 24546 | C4-1/8-T0-1001-F |
| A1A4R28 | 0698-3438 | 3 | 3 | RESISTOR 147 1% .125W F TC=0+-100 | 24546 | C4-1/8-T0-147R-F |
| A1A4R29 | 0757-0280 | 3 | | RESISTOR 1K 1% .125W F TC=0+-100 | 24546 | C4-1/8-T0-1001-F |
| A1A4R30 | 0698-3437 | 2 | 1 | RESISTOR 133 1% .125W F TC=0+-100 | 24546 | C4-1/8-T0-133R-F |
| A1A4R31 | 0757-0438 | 3 | | RESISTOR 5.11K 1% .125W F TC=0+-100 | 24546 | C4-1/8-T0-5111-F |
| A1A4R32 | 0698-0083 | 8 | | RESISTOR 1.96K 1% .125W F TC=0+-100 | 24546 | C4-1/8-T0-1961-F |
| A1A4R33 | 0757-0294 | 9 | 1 | RESISTOR 17.8 1% .125W F TC=0+-100 | 19701 | MF4C1/8-T0-17R8-F |
| A1A4R34 | 0757-0416 | 7 | | RESISTOR 511 1% .125W F TC=0+-100 | 24546 | C4-1/8-T0-511R-F |
| A1A4R35 | 0757-0416 | 7 | | RESISTOR 511 1% .125W F TC=0+-100 | 24546 | C4-1/8-T0-511R-F |
| A1A4R36 | 0757-1094 | 9 | 3 | RESISTOR 1.47K 1% .125W F TC=0+-100 | 24546 | C4-1/8-T0-1471-F |
| A1A4R37 | 0698-3430 | 5 | | RESISTOR 21.5 1% .125W F TC=0+-100 | 03888 | PME55-1/8-T0-21R5-F |
| A1A4R38 | 0757-0280 | 3 | | RESISTOR 1K 1% .125W F TC=0+-100 | 24546 | C4-1/8-T0-1001-F |
| A1A4R39 | 0757-0416 | 7 | | RESISTOR 511 1% .125W F TC=0+-100 | 24546 | C4-1/8-T0-511R-F |
| A1A4R40 | 0757-0416 | 7 | | RESISTOR 511 1% .125W F TC=0+-100 | 24546 | C4-1/8-T0-511R-F |



See introduction to this section for ordering information
*Indicates factory selected value
†Backdating information in Section VII

www.valuetronics.com

A1

Table 6-3. Replaceable Parts

| Reference Designation | HP Part Number | CD | Qty | Description | Mfr Code | Mfr Part Number |
|---|---|---|---|---|---|---|
| A1A4R41 | 0757-0280 | 3 | | RESISTOR 1K 1% .125W F TC=0+-100 | 24546 | C4-1/8-T0-1001-F |
| A1A4R42 | 0757-0401 | 0 | | RESISTOR 100 1% .125W F TC=0+-100 | 24546 | C4-1/8-T0-101-F |
| A1A4R43 | 2100-3749 | 6 | 2 | RESISTOR-TRMR 5K 10% C SIDE-ADJ 17-TRN | 28480 | 2100-3749 |
| A1A4R44 | 0757-0280 | 3 | | RESISTOR 1K 1% .125W F TC=0+-100 | 24546 | C4-1/8-T0-1001-F |
| A1A4R45 | 0757-0418 | 7 | | RESISTOR 511 1% .125W F TC=0+-100 | 24546 | C4-1/8-T0-511R-F |
| A1A4R46 | 0757-0418 | 7 | | RESISTOR 511 1% .125W F TC=0+-100 | 24546 | C4-1/8-T0-511R-F |
| A1A4R47 | 0764-0013 | 6 | 1 | RESISTOR 56 5% 2W MO TC=0+-200 | 28480 | 0764-0013 |
| A1A4R48 | 0757-0280 | 3 | | RESISTOR 1K 1% .125W F TC=0+-100 | 24546 | C4-1/8-T0-1001-F |
| A1A4R49 | 0698-3623 | 8 | 1 | RESISTOR 130 5% 2W MO TC=0+-200 | 28480 | 0698-3623 |
| A1A4R50 | 0757-0418 | 7 | | RESISTOR 511 1% .125W F TC=0+-100 | 24546 | C4-1/8-T0-511R-F |
| A1A4R51 | 0698-8817 | 2 | 2 | RESISTOR 2.61 1% .125W F TC=0+-100 | 28480 | 0698-8817 |
| A1A4R52 | 2100-3749 | 6 | | RESISTOR-TRMR 5K 10% C SIDE-ADJ 17-TRN | 28480 | 2100-3749 |
| A1A4R53 | 0698-7242 | 5 | 1 | RESISTOR 1.78K 1% .05W F TC=0+-100 | 24546 | C3-1/8-T0-1781-F |
| A1A4R54 | 0757-0416 | 7 | | RESISTOR 511 1% .125W F TC=0+-100 | 24546 | C4-1/8-T0-511R-F |
| A1A4R55 | 0698-3440 | 7 | 1 | RESISTOR 196 1% .125W F TC=0+-100 | 24546 | C4-1/8-T0-196R-F |
| A1A4R56 | 0757-0416 | 7 | | RESISTOR 511 1% .125W F TC=0+-100 | 24546 | C4-1/8-T0-511R-F |
| A1A4R57 | 0757-0416 | 7 | | RESISTOR 511 1% .125W F TC=0+-100 | 24546 | C4-1/8-T0-511R-F |
| A1A4R58 | 0757-0416 | 7 | | RESISTOR 511 1% .125W F TC=0+-100 | 24546 | C4-1/8-T0-511R-F |
| A1A4R59 | 0698-0082 | 7 | 1 | RESISTOR 464 1% .125W F TC=0+-100 | 24546 | C4-1/8-T0-4640-F |
| A1A4R60 | 0698-3152 | 8 | 3 | RESISTOR 3.48K 1% .125W F TC=0+-100 | 24546 | C4-1/8-T0-3481-F |
| A1A4R61 | 0698-0085 | 0 | 4 | RESISTOR 2.61K 1% .125W F TC=0+-100 | 24546 | C4-1/8-T0-2611-F |
| A1A4R62 | 0698-3444 | 1 | | RESISTOR 316 1% .125W F TC=0+-100 | 24546 | C4-1/8-T0-316R-F |
| A1A4R63 | 0698-3441 | 8 | 2 | RESISTOR 215 1% .125W F TC=0+-100 | 24546 | C4-1/8-T0-215R-F |
| A1A4R64 | 0757-0428 | 1 | 2 | RESISTOR 1.62K 1% .125W F TC=0+-100 | 24546 | C4-1/8-T0-1621-F |
| A1A4R65 | 0757-0419 | 0 | | RESISTOR 681 1% .125W F TC=0+-100 | 24546 | C4-1/8-T0-681R-F |
| A1A4R66 | 0698-3441 | 8 | | RESISTOR 215 1% .125W F TC=0+-100 | 24546 | C4-1/8-T0-215R-F |
| A1A4TP1 | 0360-0535 | 0 | | TERMINAL TEST POINT PCB | 00000 | ORDER BY DESCRIPTION |
| A1A4TP2 | 0360-0535 | 0 | | TERMINAL TEST POINT PCB | 00000 | ORDER BY DESCRIPTION |
| A1A4TP3 | 0360-0535 | 0 | | TERMINAL TEST POINT PCB | 00000 | ORDER BY DESCRIPTION |
| A1A4TP4 | 0360-0535 | 0 | | TERMINAL TEST POINT PCB | 00000 | ORDER BY DESCRIPTION |
| A1A4TP5 | 0360-0535 | 0 | | TERMINAL TEST POINT PCB | 00000 | ORDER BY DESCRIPTION |
| A1A4TP6 | 0360-0535 | 0 | | TERMINAL TEST POINT PCB | 00000 | ORDER BY DESCRIPTION |
| A1A4TP7 | 0360-0535 | 0 | | TERMINAL TEST POINT PCB | 00000 | ORDER BY DESCRIPTION |
| A1A4TP8 | 0360-0535 | 0 | | TERMINAL TEST POINT PCB | 00000 | ORDER BY DESCRIPTION |
| A1A4TP9 | 0360-0535 | 0 | | TERMINAL TEST POINT PCB | 00000 | ORDER BY DESCRIPTION |
| A1A4TP10 | 0360-0535 | 0 | | TERMINAL TEST POINT PCB | 00000 | ORDER BY DESCRIPTION |
| A1A4TP11 | 0360-0535 | 0 | | TERMINAL TEST POINT PCB | 00000 | ORDER BY DESCRIPTION |
| A1A4TP12 | 0360-0535 | 0 | | TERMINAL TEST POINT PCB | 00000 | ORDER BY DESCRIPTION |
| A1A4TP13 | 0360-0535 | 0 | | TERMINAL TEST POINT PCB | 00000 | ORDER BY DESCRIPTION |
| A1A4TP14 | 0360-0535 | 0 | | TERMINAL TEST POINT PCB | 00000 | ORDER BY DESCRIPTION |
| A1A4TP15 | 0360-0535 | 0 | | TERMINAL TEST POINT PCB | 00000 | ORDER BY DESCRIPTION |
| A1A4TP16 | 0360-0535 | 0 | | TERMINAL TEST POINT PCB | 00000 | ORDER BY DESCRIPTION |
| A1A4U1 | 1820-0694 | 9 | 1 | IC GATE TTL S EXCL-OR QUAD 2-INP | 01295 | SN74S86N |
| A1A4U2 | 1820-0684 | 7 | 1 | IC INV TTL S HEX 1-INP | 01295 | SN74S05N |
| A1A4U3 | 1820-1367 | 5 | 1 | IC GATE TTL S AND QUAD 2-INP | 01295 | SN74S08N |
| A1A4U4 | 1820-0682 | 5 | 1 | IC GATE TTL S NAND QUAD 2-INP | 01295 | SN74S03N |
| A1A4U5 | 1820-1144 | 6 | 1 | IC GATE TTL LS NOR QUAD 2-INP | 01295 | SN74LS02N |
| A1A4U6 | 1820-0681 | 4 | 1 | IC GATE TTL S NAND QUAD 2-INP | 01295 | SN74S00N |
| A1A4U7 | 1820-1797 | 5 | 1 | IC DRVR TTL 2-INP | 27014 | DH0035CG |
| A1A4U8 | 1820-0683 | 6 | 1 | IC INV TTL S HEX 1-INP | 01295 | SN74S04N |
| A1A4U9 | 1820-1729 | 3 | 1 | IC LCH TTL LS COM CLEAR 8-BIT | 01295 | SN74LS259N |
| A1A4U10 | 1820-1423 | 4 | 1 | IC MV TTL LS MONOSTBL RETRIG DUAL | 01295 | SN74LS123N |
| A1A4VR1 | 1902-0533 | 9 | 1 | DIODE-ZNR 4.99V 2% DO-15 PD=1W TC=-.012% | 28480 | 1902-0533 |
| A1A4VR2 | 1902-0952 | 6 | 1 | DIODE-ZNR 5.6V 5% DO-35 PD=.4W TC=+.046% | 28480 | 1902-0952 |
| A1A4VR3 | 1902-0551 | 1 | 1 | DIODE-ZNR 6.2V 5% PD=1W IR=10UA | 28480 | 1902-0551 |
| A1A4VR4 | 1902-0948 | 0 | | DIODE-ZNR 3.9V 5% DO-35 PD=.4W TC=-.012% | 28480 | 1902-0948 |
| | 1200-0081 | 4 | 4 | INSULATOR-FLG-BSHG NYLON | 28480 | 1200-0081 |
| | 6040-0239 | 9 | 1 | LUBRICANT-GREASE SIL | 05820 | 120 |
| | 08673-20117 | 7 | 1 | BD PULSE DRVR | 28480 | 08673-20117 |
| A1A5 | 08673-60028 | 3 | 1 | DAC ENABLE BOARD ASSEMBLY | 28480 | 08673-60028 |
| A1A5C1 | 0160-4527 | 4 | 1 | CAPACITOR-FXD 56PF +-5% 200VDC CER 0+-30 | 28480 | 0160-4527 |
| A1A5C2 | 0160-2055 | 9 | | CAPACITOR-FXD .01UF +80-20% 100VDC CER | 28480 | 0160-2055 |
| A1A5C3 | 0160-0576 | 5 | | CAPACITOR-FXD .1UF +-20% 50VDC CER | 28480 | 0160-0576 |
| A1A5C4 | 0180-0116 | 1 | | CAPACITOR-FXD 6.8UF+-10% 35VDC TA | 56289 | 150D685X9035B2 |
| A1A5C5 | 0160-0576 | 5 | | CAPACITOR-FXD .1UF +-20% 50VDC CER | 28480 | 0160-0576 |

See introduction to this section for ordering information
*Indicates factory selected value
†Backdating information in Section VII



www.valuetronics.com

A1

Table 6-3. Replaceable Parts

| Reference Designation | HP Part Number | C D | Qty | Description | Mfr Code | Mfr Part Number |
|---|---|---|---|---|---|---|
| A1A5C6 | 0160-3878 | 6 | | CAPACITOR-FXD 1000PF +-20% 100VDC CER | 28480 | 0160-3878 |
| A1A5C7 | 0160-0576 | 5 | | CAPACITOR-FXD .1UF +-20% 50VDC CER | 28480 | 0160-0576 |
| A1A5C8 | 0180-0197 | 8 | | CAPACITOR-FXD 2.2UF+-10% 20VDC TA | 56289 | 150D225X9020A2 |
| A1A5C9 | 0160-0576 | 5 | | CAPACITOR-FXD .1UF +-20% 50VDC CER | 28480 | 0160-0576 |
| A1A5C10 | 0180-0291 | 3 | | CAPACITOR-FXD 1UF+-10% 35VDC TA | 56289 | 150D105X9035A2 |
| A1A5C11 | 0160-0576 | 5 | | CAPACITOR-FXD .1UF +-20% 50VDC CER | 28480 | 0160-0576 |
| A1A5C12 | 0160-0576 | 5 | | CAPACITOR-FXD .1UF +-20% 50VDC CER | 28480 | 0160-0576 |
| A1A5C13 | 0160-0576 | 5 | | CAPACITOR-FXD .1UF +-20% 50VDC CER | 28480 | 0160-0576 |
| A1A5C14 | 0160-0576 | 5 | | CAPACITOR-FXD .1UF +-20% 50VDC CER | 28480 | 0160-0576 |
| A1A5C15 | 0160-0576 | 5 | | CAPACITOR-FXD .1UF +-20% 50VDC CER | 28480 | 0160-0576 |
| A1A5C16 | | | | NOT ASSIGNED | | |
| A1A5C17 | 0160-3878 | 6 | | CAPACITOR-FXD 1000PF +-20% 100VDC CER | 28480 | 0160-3878 |
| A1A5C18 | 0160-3878 | 6 | | CAPACITOR-FXD 1000PF +-20% 100VDC CER | 28480 | 0160-3878 |
| A1A5C19 | 0160-3877 | 5 | | CAPACITOR-FXD 100PF +-20% 200VDC CER | 28480 | 0160-3877 |
| A1A5C20 | 0160-3872 | 0 | 1 | CAPACITOR-FXD 2.2PF +-.25PF 200VDC CER | 28480 | 0160-3872 |
| A1A5C21 | 0180-0291 | 3 | | CAPACITOR-FXD 1UF+-10% 35VDC TA | 56289 | 150D105X9035A2 |
| A1A5C22 | 0180-0291 | 3 | | CAPACITOR-FXD 1UF+-10% 35VDC TA | 56289 | 150D105X9035A2 |
| A1A5C23 | 0160-0570 | 9 | | CAPACITOR-FXD 220PF +-20% 100VDC CER | 20932 | 5024EM100RD221M |
| A1A5C24 | 0160-0570 | 9 | | CAPACITOR-FXD 220PF +-20% 100VDC CER | 20932 | 5024EM100RD221M |
| A1A5C25 | 0160-0576 | 5 | | CAPACITOR-FXD .1UF +-20% 50VDC CER | 28480 | 0160-0576 |
| A1A5C26 | 0160-3878 | 6 | | CAPACITOR-FXD 1000PF +-20% 100VDC CER | 28480 | 0160-3878 |
| A1A5CR1 | 1901-0050 | 3 | | DIODE-SWITCHING 80V 200MA 2NS DO-35 | 28480 | 1901-0050 |
| A1A5CR2 | 1901-0050 | 3 | | DIODE-SWITCHING 80V 200MA 2NS DO-35 | 28480 | 1901-0050 |
| A1A5CR3 | 1901-0050 | 3 | | DIODE-SWITCHING 80V 200MA 2NS DO-35 | 28480 | 1901-0050 |
| A1A5MP1 | 1480-0073 | 6 | | PIN-ROLL .062-IN-DIA .25-IN-LG BE-CU | 28480 | 1480-0073 |
| A1A5MP2 | 4040-0748 | 3 | | EXTR-PC BD BLK POLYC .062-BD-THKNS | 28480 | 4040-0748 |
| A1A5MP3 | 4040-0753 | 0 | 1 | EXTR-PC BD GRN POLYC .062-BD-THKNS | 28480 | 4040-0753 |
| A1A5Q1 | 1853-0459 | 3 | | TRANSISTOR PNP SI PD=625MW FT=200MHZ | 28480 | 1853-0459 |
| A1A5Q2 | 1853-0459 | 3 | | TRANSISTOR PNP SI PD=625MW FT=200MHZ | 28480 | 1853-0459 |
| A1A5Q3 | 1854-0810 | 2 | | TRANSISTOR NPN SI PD=625MW FT=200MHZ | 28480 | 1854-0810 |
| A1A5Q4 | 1854-0810 | 2 | | TRANSISTOR NPN SI PD=625MW FT=200MHZ | 28480 | 1854-0810 |
| A1A5Q5 | 1853-0459 | 3 | | TRANSISTOR PNP SI PD=625MW FT=200MHZ | 28480 | 1853-0459 |
| A1A5Q6 | 1853-0459 | 3 | | TRANSISTOR PNP SI PD=625MW FT=200MHZ | 28480 | 1853-0459 |
| A1A5Q7 | 1855-0414 | 4 | | TRANSISTOR J-FET 2N4393 N-CHAN D-MODE | 04713 | 2N4393 |
| A1A5Q8 | 1855-0420 | 2 | 2 | TRANSISTOR J-FET 2N4391 N-CHAN D-MODE | 01295 | 2N4391 |
| A1A5Q9 | 1855-0420 | 2 | | TRANSISTOR J-FET 2N4391 N-CHAN D-MODE | 01295 | 2N4391 |
| A1A5Q10 | 1854-0809 | 9 | | TRANSISTOR NPN 2N2369A SI TO-18 PD=360MW | 28480 | 1854-0809 |
| A1A5Q11 | 1854-0637 | 1 | 2 | TRANSISTOR NPN 2N2219A SI TO-5 PD=800MW | 01295 | 2N2219A |
| A1A5Q12 | 1853-0314 | 9 | 3 | TRANSISTOR PNP 2N2905A SI TO-39 PD=600MW | 04713 | 2N2905A |
| A1A5Q13 | 1853-0459 | 3 | | TRANSISTOR PNP SI PD=625MW FT=200MHZ | 28480 | 1853-0459 |
| A1A5Q14 | 1854-0810 | 2 | | TRANSISTOR NPN SI PD=625MW FT=200MHZ | 28480 | 1854-0810 |
| A1A5R1 | 0698-3403 | 2 | 2 | RESISTOR 348 1% .5W F TC=0+-100 | 28480 | 0698-3403 |
| A1A5R2 | 0757-0444 | 1 | 4 | RESISTOR 12.1K 1% .125W F TC=0+-100 | 24546 | C4-1/8-T0-1212-F |
| A1A5R3 | 0698-3403 | 2 | | RESISTOR 348 1% .5W F TC=0+-100 | 28480 | 0698-3403 |
| A1A5R4 | 0757-0441 | 8 | | RESISTOR 8.25K 1% .125W F TC=0+-100 | 24546 | C4-1/8-T0-8251-F |
| A1A5R5 | 0757-0280 | 3 | | RESISTOR 1K 1% .125W F TC=0+-100 | 24546 | C4-1/8-T0-1001-F |
| A1A5R6 | 0698-3153 | 9 | 3 | RESISTOR 3.83K 1% .125W F TC=0+-100 | 24546 | C4-1/8-T0-3831-F |
| A1A5R7 | 0757-0797 | 7 | 2 | RESISTOR 90.9 1% .5W F TC=0+-100 | 28480 | 0757-0797 |
| A1A5R8 | 0698-3450 | 9 | | RESISTOR 42.2K 1% .125W F TC=0+-100 | 24546 | C4-1/8-T0-4222-F |
| A1A5R9 | 2100-3103 | 6 | 12 | RESISTOR-TRMR 10K 10% C SIDE-ADJ 17-TRN | 02111 | 43P103 |
| A1A5R10 | 0698-0084 | 9 | 2 | RESISTOR 2.15K 1% .125W F TC=0+-100 | 24546 | C4-1/8-T0-2151-F |
| A1A5R11 | 0757-1094 | 9 | | RESISTOR 1.47K 1% .125W F TC=0+-100 | 24546 | C4-1/8-T0-1471-F |
| A1A5R12 | 0811-3202 | 1 | 4 | RESISTOR 30.615K .1% .05W PWW TC=0+-10 | 14140 | 1409-1/40-30615R-B |
| A1A5R13 | 0698-0083 | 8 | | RESISTOR 1.96K 1% .125W F TC=0+-100 | 24546 | C4-1/8-T0-1961-F |
| A1A5R14 | 0698-0083 | 8 | | RESISTOR 1.96K 1% .125W F TC=0+-100 | 24546 | C4-1/8-T0-1961-F |
| A1A5R15 | 0811-3377 | 1 | 1 | RESISTOR 5.62K .1% .125W PWW TC=0+-10 | 28480 | 0811-3377 |
| A1A5R16 | 0698-3156 | 2 | 7 | RESISTOR 14.7K 1% .125W F TC=0+-100 | 24546 | C4-1/8-T0-1472-F |
| A1A5R17 | 0698-3156 | 2 | | RESISTOR 14.7K 1% .125W F TC=0+-100 | 24546 | C4-1/8-T0-1472-F |
| A1A5R18 | 0698-0083 | 8 | | RESISTOR 1.96K 1% .125W F TC=0+-100 | 24546 | C4-1/8-T0-1961-F |
| A1A5R19 | 0698-0083 | 8 | | RESISTOR 1.96K 1% .125W F TC=0+-100 | 24546 | C4-1/8-T0-1961-F |
| A1A5R20 | 0698-0083 | 8 | | RESISTOR 1.96K 1% .125W F TC=0+-100 | 24546 | C4-1/8-T0-1961-F |
| A1A5R21 | 0698-0083 | 8 | | RESISTOR 1.96K 1% .125W F TC=0+-100 | 24546 | C4-1/8-T0-1961-F |
| A1A5R22 | 0698-0083 | 8 | | RESISTOR 1.96K 1% .125W F TC=0+-100 | 24546 | C4-1/8-T0-1961-F |
| A1A5R23 | 0698-0083 | 8 | | RESISTOR 1.96K 1% .125W F TC=0+-100 | 24546 | C4-1/8-T0-1961-F |
| A1A5R24 | 0757-0442 | 9 | | RESISTOR 10K 1% .125W F TC=0+-100 | 24546 | C4-1/8-T0-1002-F |
| A1A5R25 | 0757-0442 | 9 | | RESISTOR 10K 1% .125W F TC=0+-100 | 24546 | C4-1/8-T0-1002-F |

See introduction to this section for ordering information
*Indicates factory selected value
†Backdating information in Section VII



www.valuetronics.com

A1

Table 6-3. Replaceable Parts

| Reference Designation | HP Part Number | C D | Qty | Description | Mfr Code | Mfr Part Number |
|---|---|---|---|---|---|---|
| A1A5R26 | 0698-0083 | 8 | | RESISTOR 1.96K 1% .125W F TC=0+-100 | 24546 | C4-1/8-T0-1961-F |
| A1A5R27 | 0698-3154 | 0 | 2 | RESISTOR 4.22K 1% .125W F TC=0+-100 | 24546 | C4-1/8-T0-4221-F |
| A1A5R28 | 0698-7284 | 5 | | RESISTOR 100K 1% .05W F TC=0+-100 | 24546 | C3-1/8-T0-1003-F |
| A1A5R29 | 0757-0465 | 6 | | RESISTOR 100K 1% .125W F TC=0+-100 | 24546 | C4-1/8-T0-1003-F |
| A1A5R30 | 0757-0280 | 3 | | RESISTOR 1K 1% .125W F TC=0+-100 | 24546 | C4-1/8-T0-1001-F |
| A1A5R31 | 0811-3374 | 8 | 2 | RESISTOR 23.7K .1% .05W PWW TC=0+-10 | 28480 | 0811-3374 |
| A1A5R32 | 0811-3374 | 8 | | RESISTOR 23.7K .1% .05W PWW TC=0+-10 | 28480 | 0811-3374 |
| A1A5R33 | 0698-7263 | 0 | 2 | RESISTOR 13.3K 1% .05W F TC=0+-100 | 24546 | C3-1/8-T0-1332-F |
| A1A5R34 | 0698-7188 | 8 | | RESISTOR 10 1% .05W F TC=0+-100 | 24546 | C3-1/8-T0-10R-F |
| A1A5R35 | 0757-0346 | 2 | | RESISTOR 10 1% .125W F TC=0+-100 | 24546 | C4-1/8-T0-10R0-F |
| A1A5R36 | 0811-3202 | 1 | | RESISTOR 30.615K .1% .05W PWW TC=0+-10 | 14140 | 1409-1/40-30615R-B |
| A1A5R37 | 0757-0444 | 1 | | RESISTOR 12.1K 1% .125W F TC=0+-100 | 24546 | C4-1/8-T0-1212-F |
| A1A5R38 | 0698-3136 | 8 | 4 | RESISTOR 17.8K 1% .125W F TC=0+-100 | 24546 | C4-1/8-T0-1782-F |
| A1A5R39 | 0757-0444 | 1 | | RESISTOR 12.1K 1% .125W F TC=0+-100 | 24546 | C4-1/8-T0-1212-F |
| A1A5R40 | 0757-0459 | 8 | | RESISTOR 56.2K 1% .125W F TC=0+-100 | 24546 | C4-1/8-T0-5622-F |
| A1A5R41 | 0757-0440 | 7 | 1 | RESISTOR 7.5K 1% .125W F TC=0+-100 | 24546 | C4-1/8-T0-7501-F |
| A1A5R42 | 0698-7196 | 8 | 2 | RESISTOR 21.5 1% .05W F TC=0+-100 | 24546 | C3-1/8-T0-21R5-F |
| A1A5R43 | 0698-7196 | 8 | | RESISTOR 21.5 1% .05W F TC=0+-100 | 24546 | C3-1/8-T0-21R5-F |
| A1A5R44 | 0757-0199 | 3 | 2 | RESISTOR 21.5K 1% .125W F TC=0+-100 | 24546 | C4-1/8-T0-2152-F |
| A1A5R45 | 0698-3450 | 9 | | RESISTOR 42.2K 1% .125W F TC=0+-100 | 24546 | C4-1/8-T0-4222-F |
| A1A5R46 | 0698-7212 | 9 | | RESISTOR 100 1% .05W F TC=0+-100 | 24546 | C3-1/8-T0-100R-F |
| A1A5R47 | 2100-3103 | 6 | | RESISTOR-TRMR 10K 10% C SIDE-ADJ 17-TRN | 02111 | 43P103 |
| A1A5R48 | 0698-8061 | 8 | 1 | RESISTOR 8.25K .1% .125W F TC=0+-25 | 19701 | MF4C1/8-T9-8251-B |
| A1A5R49 | 0757-0428 | 1 | | RESISTOR 1.62K 1% .125W F TC=0+-100 | 24546 | C4-1/8-T0-1621-F |
| A1A5R50 | 0757-0447 | 4 | | RESISTOR 16.2K 1% .125W F TC=0+-100 | 24546 | C4-1/8-T0-1622-F |
| A1A5R51 | 0757-0458 | 7 | | RESISTOR 51.1K 1% .125W F TC=0+-100 | 24546 | C4-1/8-T0-5112-F |
| A1A5R52 | 0757-0279 | 0 | 1 | RESISTOR 3.16K 1% .125W F TC=0+-100 | 24546 | C4-1/8-T0-3161-F |
| A1A5R53 | 0757-0447 | 4 | | RESISTOR 16.2K 1% .125W F TC=0+-100 | 24546 | C4-1/8-T0-1622-F |
| A1A5R54 | 0757-0458 | 7 | | RESISTOR 51.1K 1% .125W F TC=0+-100 | 24546 | C4-1/8-T0-5112-F |
| A1A5R55 | 0757-0438 | 3 | | RESISTOR 5.11K 1% .125W F TC=0+-100 | 24546 | C4-1/8-T0-5111-F |
| A1A5R56 | 0757-0466 | 7 | 1 | RESISTOR 110K 1% .125W F TC=0+-100 | 24546 | C4-1/8-T0-1103-F |
| A1A5R57 | 0698-0085 | 0 | | RESISTOR 2.61K 1% .125W F TC=0+-100 | 24546 | C4-1/8-T0-2611-F |
| A1A5R58 | 0757-0438 | 3 | | RESISTOR 5.11K 1% .125W F TC=0+-100 | 24546 | C4-1/8-T0-5111-F |
| A1A5R59 | 0698-3450 | 9 | | RESISTOR 42.2K 1% .125W F TC=0+-100 | 24546 | C4-1/8-T0-4222-F |
| A1A5R60 | 2100-3103 | 6 | | RESISTOR-TRMR 10K 10% C SIDE-ADJ 17-TRN | 02111 | 43P103 |
| A1A5R61 | 0757-0395 | 1 | 1 | RESISTOR 56.2 1% .125W F TC=0+-100 | 24546 | C4-1/8-T0-56R2-F |
| A1A5R62 | 0757-0458 | 7 | | RESISTOR 51.1K 1% .125W F TC=0+-100 | 24546 | C4-1/8-T0-5112-F |
| A1A5R63 | 0698-3161 | 9 | 1 | RESISTOR 38.3K 1% .125W F TC=0+-100 | 24546 | C4-1/8-T0-3832-F |
| A1A5TP1 | 1251-0600 | 0 | | CONNECTOR-SGL CONT PIN 1.14-MM-BSC-SZ SQ | 28480 | 1251-0600 |
| A1A5TP2 | 1251-0600 | 0 | | CONNECTOR-SGL CONT PIN 1.14-MM-BSC-SZ SQ | 28480 | 1251-0600 |
| A1A5TP3 | 1251-0600 | 0 | | CONNECTOR-SGL CONT PIN 1.14-MM-BSC-SZ SQ | 28480 | 1251-0600 |
| A1A5TP4 | 1251-0600 | 0 | | CONNECTOR-SGL CONT PIN 1.14-MM-BSC-SZ SQ | 28480 | 1251-0600 |
| A1A5TP5 | 1251-0600 | 0 | | CONNECTOR-SGL CONT PIN 1.14-MM-BSC-SZ SQ | 28480 | 1251-0600 |
| A1A5TP6 | 1251-0600 | 0 | | CONNECTOR-SGL CONT PIN 1.14-MM-BSC-SZ SQ | 28480 | 1251-0600 |
| A1A5TP7 | 1251-0600 | 0 | | CONNECTOR-SGL CONT PIN 1.14-MM-BSC-SZ SQ | 28480 | 1251-0600 |
| A1A5TP8 | 1251-0600 | 0 | | CONNECTOR-SGL CONT PIN 1.14-MM-BSC-SZ SQ | 28480 | 1251-0600 |
| A1A5TP9 | 1251-0600 | 0 | | CONNECTOR-SGL CONT PIN 1.14-MM-BSC-SZ SQ | 28480 | 1251-0600 |
| A1A5TP10 | 1251-0600 | 0 | | CONNECTOR-SGL CONT PIN 1.14-MM-BSC-SZ SQ | 28480 | 1251-0600 |
| A1A5U1 | 1826-0972 | 8 | 1 | IC-DAC 10-BIT | 28480 | 1826-0972 |
| A1A5U2 | 1826-0798 | 6 | 2 | IC CONV 8-B-D/A | 18324 | NE5018F |
| A1A5U3 | 1820-1445 | 0 | | IC LCH TTL LS 4-BIT | 01295 | SN74LS375N |
| A1A5U4 | 1826-0798 | 6 | | IC CONV 8-B-D/A | 18324 | NE5018F |
| A1A5U5 | 1826-0025 | 2 | 2 | IC OP AMP LOW-DRIFT TO-99 PKG | 27014 | LM208AH |
| A1A5U6 | 1826-0217 | 4 | 4 | IC OP AMP GP DUAL TO-99 PKG | 07933 | RC4558T |
| A1A5U7 | 1826-0026 | 3 | 1 | IC COMPARATOR PRCN TO-99 PKG | 01295 | LM311L |
| A1A5U8 | 1820-0495 | 8 | 1 | IC DCDR TTL 4-TO-16-LINE 4-INP | 01295 | SN74154N |
| A1A5U9 | 1820-1917 | 1 | 1 | IC BFR TTL LS LINE DRVR DCTL | 01295 | SN74LS240N |
| A1A5U10 | 1826-0191 | 3 | 1 | IC COMPARATOR GP DUAL TO-100 PKG | 27014 | LM319H |
| A1A5U11 | 1826-0059 | 2 | | IC OP AMP GP TO-99 PKG | 01295 | LM201AL |
| A1A5U12 | 1820-1208 | 3 | 1 | IC GATE TTL LS OR QUAD 2-INP | 01295 | SN74LS32N |
| A1A6 | 08673-60029 | 4 | 1 | METER BOARD ASSEMBLY | 28480 | 08673-60029 |
| A1A6C1 | 0180-0291 | 3 | | CAPACITOR-FXD 10UF+-10% 35VDC TA | 56289 | 150D106X9035A2 |
| A1A6C2 | 0180-1746 | 5 | | CAPACITOR-FXD 15UF+-10% 20VDC TA | 56289 | 150D156X9020B2 |
| A1A6C3 | 0180-0291 | 3 | | CAPACITOR-FXD 10UF+-10% 35VDC TA | 56289 | 150D106X9035A2 |
| A1A6C4 | 0180-2207 | 6 | 5 | CAPACITOR-FXD 100UF+-10% 10VDC TA | 56289 | 150D107X9010R2 |
| A1A6C5 | 0180-0197 | 8 | | CAPACITOR-FXD 2.2UF+-10% 20VDC TA | 56289 | 150D225X9020A2 |

See introduction to this section for ordering information
*Indicates factory selected value
†Backdating information in Section VII



www.valuetronics.com

A1

Table 6-3. Replaceable Parts

| Reference Designation | HP Part Number | C D | Qty | Description | Mfr Code | Mfr Part Number |
|---|---|---|---|---|---|---|
| A1A6C6 | 0180-2207 | 5 | | CAPACITOR-FXD 100UF+-10% 10VDC TA | 56289 | 150D107X9010R2 |
| A1A6C7 | 0180-0291 | 3 | | CAPACITOR-FXD 1UF+-10% 35VDC TA | 56289 | 150D105X9035A2 |
| A1A6C8 | 0180-0197 | 8 | | CAPACITOR-FXD 2.2UF+-10% 20VDC TA | 56289 | 150D225X9020A2 |
| A1A6C9 | 0180-0291 | 3 | | CAPACITOR-FXD 1UF+-10% 35VDC TA | 56289 | 150D105X9035A2 |
| A1A6C10 | 0180-2620 | 6 | | CAPACITOR-FXD 2.2UF+-10% 50VDC TA | 25088 | D2R2GS1B50K |
| A1A6C11 | 0180-0197 | 8 | | CAPACITOR-FXD 2.2UF+-10% 20VDC TA | 56289 | 150D225X9020A2 |
| A1A6C12 | 0180-0491 | 5 | | CAPACITOR-FXD 10UF+-20% 25VDC TA | 28480 | 0180-0491 |
| A1A6C13 | 0180-0197 | 8 | | CAPACITOR-FXD 2.2UF+-10% 20VDC TA | 56289 | 150D225X9020A2 |
| A1A6C14 | 0180-0291 | 3 | | CAPACITOR-FXD 1UF+-10% 35VDC TA | 56289 | 150D105X9035A2 |
| A1A6C15 | 0180-2619 | 3 | 1 | CAPACITOR-FXD 22UF+-10% 15VDC TA | 25088 | D22GS1B15K |
| A1A6C16 | 0160-3875 | 3 | | CAPACITOR-FXD 22PF +-5% 200VDC CER 0+-30 | 28480 | 0160-3875 |
| A1A6C17 | 0180-1746 | 5 | | CAPACITOR-FXD 15UF+-10% 20VDC TA | 56289 | 150D156X9020B2 |
| A1A6C18 | 0160-2252 | 8 | 1 | CAPACITOR-FXD 6.2PF +-.25PF 500VDC CER | 28480 | 0160-2252 |
| A1A6C19 | 0180-0197 | 8 | | CAPACITOR-FXD 2.2UF+-10% 20VDC TA | 56289 | 150D225X9020A2 |
| A1A6C20 | 0160-3875 | 3 | | CAPACITOR-FXD 22PF +-5% 200VDC CER 0+-30 | 28480 | 0160-3875 |
| A1A6C21 | 0180-0197 | 8 | | CAPACITOR-FXD 2.2UF+-10% 20VDC TA | 56289 | 150D225X9020A2 |
| A1A6C22 | 0180-1746 | 5 | | CAPACITOR-FXD 15UF+-10% 20VDC TA | 56289 | 150D156X9020B2 |
| A1A6C23 | 0180-0197 | 8 | | CAPACITOR-FXD 2.2UF+-10% 20VDC TA | 56289 | 150D225X9020A2 |
| A1A6C24 | 0180-0197 | 8 | | CAPACITOR-FXD 2.2UF+-10% 20VDC TA | 56289 | 150D225X9020A2 |
| A1A6C25 | 0160-3879 | 7 | | CAPACITOR-FXD .01UF +-20% 100VDC CER | 28480 | 0160-3879 |
| A1A6C26 | 0180-2206 | 4 | 2 | CAPACITOR-FXD 60UF+-10% 6VDC TA | 56289 | 150D606X9006B2 |
| A1A6C27 | 0180-2206 | 4 | | CAPACITOR-FXD 60UF+-10% 6VDC TA | 56289 | 150D606X9006B2 |
| A1A6C28 | 0180-1746 | 5 | | CAPACITOR-FXD 15UF+-10% 20VDC TA | 56289 | 150D156X9020B2 |
| A1A6C29 | 0180-0291 | 3 | | CAPACITOR-FXD 1UF+-10% 35VDC TA | 56289 | 150D105X9035A2 |
| A1A6C30 | 0180-0197 | 8 | | CAPACITOR-FXD 2.2UF+-10% 20VDC TA | 56289 | 150D225X9020A2 |
| A1A6C31 | 0180-2207 | 5 | | CAPACITOR-FXD 100UF+-10% 10VDC TA | 56289 | 150D107X9010R2 |
| A1A6C32 | 0180-0229 | 7 | | CAPACITOR-FXD 33UF+-10% 10VDC TA | 56289 | 150D336X9010B2 |
| A1A6C33 | 0180-0291 | 3 | | CAPACITOR-FXD 1UF+-10% 35VDC TA | 56289 | 150D105X9035A2 |
| A1A6CR1 | 1901-0535 | 9 | 6 | DIODE-SM SIG SCHOTTKY | 28480 | 1901-0535 |
| A1A6CR2 | 1901-0040 | 1 | | DIODE-SWITCHING 30V 50MA 2NS DO-35 | 28480 | 1901-0040 |
| A1A6CR3 | 1901-0535 | 9 | | DIODE-SM SIG SCHOTTKY | 28480 | 1901-0535 |
| A1A6CR4 | 1901-0040 | 1 | | DIODE-SWITCHING 30V 50MA 2NS DO-35 | 28480 | 1901-0040 |
| A1A6CR5 | 1901-0040 | 1 | | DIODE-SWITCHING 30V 50MA 2NS DO-35 | 28480 | 1901-0040 |
| A1A6CR6 | 1901-0040 | 1 | | DIODE-SWITCHING 30V 50MA 2NS DO-35 | 28480 | 1901-0040 |
| A1A6CR7 | 1901-0040 | 1 | | DIODE-SWITCHING 30V 50MA 2NS DO-35 | 28480 | 1901-0040 |
| A1A6CR8 | 1901-0040 | 1 | | DIODE-SWITCHING 30V 50MA 2NS DO-35 | 28480 | 1901-0040 |
| A1A6CR9 | 1901-0040 | 1 | | DIODE-SWITCHING 30V 50MA 2NS DO-35 | 28480 | 1901-0040 |
| A1A6CR10 | 1901-0050 | 3 | | DIODE-SWITCHING 80V 200MA 2NS DO-35 | 28480 | 1901-0050 |
| A1A6CR11 | 1901-0050 | 3 | | DIODE-SWITCHING 80V 200MA 2NS DO-35 | 28480 | 1901-0050 |
| A1A6CR12 | 1901-0040 | 1 | | DIODE-SWITCHING 30V 50MA 2NS DO-35 | 28480 | 1901-0040 |
| A1A6CR13 | 1901-0535 | 9 | | DIODE-SM SIG SCHOTTKY | 28480 | 1901-0535 |
| A1A6CR14 | 1901-0535 | 9 | | DIODE-SM SIG SCHOTTKY | 28480 | 1901-0535 |
| A1A6CR15 | 1901-0535 | 9 | | DIODE-SM SIG SCHOTTKY | 28480 | 1901-0535 |
| A1A6CR16 | 1901-0535 | 9 | | DIODE-SM SIG SCHOTTKY | 28480 | 1901-0535 |
| A1A6CR17 | 1901-0050 | 3 | | DIODE-SWITCHING 80V 200MA 2NS DO-35 | 28480 | 1901-0050 |
| A1A6CR18 | 1901-0050 | 3 | | DIODE-SWITCHING 80V 200MA 2NS DO-35 | 28480 | 1901-0050 |
| A1A6MP1 | 1200-0173 | 5 | 1 | INSULATOR-XSTR DAP-GL | 28480 | 1200-0173 |
| A1A6MP2 | 1480-0073 | 6 | | PIN-ROLL .062-IN-DIA .25-IN-LG BE-CU | 28480 | 1480-0073 |
| A1A6MP3 | 4040-0748 | 3 | | EXTR-PC BD BLK POLYC .062-BD-THKNS | 28480 | 4040-0748 |
| A1A6MP4 | 4040-0754 | 1 | 1 | EXTR-PC BD BLU POLYC .062-BD-THKNS | 28480 | 4040-0754 |
| A1A6Q1 | 1854-0810 | 2 | | TRANSISTOR NPN SI PD=625MW FT=200MHZ | 28480 | 1854-0810 |
| A1A6Q2 | 1854-0810 | 2 | | TRANSISTOR NPN SI PD=625MW FT=200MHZ | 28480 | 1854-0810 |
| A1A6Q3 | 1854-0610 | 0 | 5 | TRANSISTOR NPN SI TO-46 FT=800MHZ | 28480 | 1854-0610 |
| A1A6Q4 | 1854-0610 | 0 | | TRANSISTOR NPN SI TO-46 FT=800MHZ | 28480 | 1854-0610 |
| A1A6Q5 | 1854-0810 | 2 | | TRANSISTOR NPN SI PD=625MW FT=200MHZ | 28480 | 1854-0810 |
| A1A6Q6 | 1854-0810 | 2 | | TRANSISTOR NPN SI PD=625MW FT=200MHZ | 28480 | 1854-0810 |
| A1A6Q7 | 1854-0809 | 9 | | TRANSISTOR NPN 2N2369A SI TO-18 PD=360MW | 28480 | 1854-0809 |
| A1A6Q8 | 1854-0810 | 2 | | TRANSISTOR NPN SI PD=625MW FT=200MHZ | 28480 | 1854-0810 |
| A1A6Q9 | 1854-0809 | 9 | | TRANSISTOR NPN 2N2369A SI TO-18 PD=360MW | 28480 | 1854-0809 |
| A1A6Q10 | 1854-0810 | 2 | | TRANSISTOR NPN SI PD=625MW FT=200MHZ | 28480 | 1854-0810 |
| A1A6Q11 | 1854-0810 | 2 | | TRANSISTOR NPN SI PD=625MW FT=200MHZ | 28480 | 1854-0810 |
| A1A6Q12 | 1854-0810 | 2 | | TRANSISTOR NPN SI PD=625MW FT=200MHZ | 28480 | 1854-0810 |
| A1A6Q13 | 1854-0610 | 0 | | TRANSISTOR NPN SI TO-46 FT=800MHZ | 28480 | 1854-0610 |
| A1A6Q14 | 1854-0597 | 2 | 1 | TRANSISTOR NPN 2N5943 SI TO-39 PD=1W | 04713 | 2N5943 |
| A1A6Q15 | 1854-0610 | 0 | | TRANSISTOR NPN SI TO-46 FT=800MHZ | 28480 | 1854-0610 |

See introduction to this section for ordering information
*Indicates factory selected value
†Backdating information in Section VII



www.valuetronics.com

A1

Table 6-3. Replaceable Parts

| Reference Designation | HP Part Number | C D | Qty | Description | Mfr Code | Mfr Part Number |
|---|---|---|---|---|---|---|
| A1A6Q16 | 1854-0610 | 0 | | TRANSISTOR NPN SI TO-46 FT=800MHZ | 28480 | 1854-0610 |
| A1A6Q17 | 1854-0477 | 7 | | TRANSISTOR NPN 2N2222A SI TO-18 PD=500MW | 04713 | 2N2222A |
| A1A6Q18 | 1853-0281 | 9 | 1 | TRANSISTOR PNP 2N2907A SI TO-18 PD=400MW | 04713 | 2N2907A |
| A1A6Q19 | 1853-0459 | 3 | | TRANSISTOR PNP SI PD=625MW FT=200MHZ | 28480 | 1853-0459 |
| A1A6Q20 | 1854-0810 | 2 | | TRANSISTOR NPN SI PD=625MW FT=200MHZ | 28480 | 1854-0810 |
| A1A6Q21 | 1854-0810 | 2 | | TRANSISTOR NPN SI PD=625MW FT=200MHZ | 28480 | 1854-0810 |
| A1A6R1 | 0757-0442 | 9 | | RESISTOR 10K 1% .125W F TC=0+-100 | 24546 | C4-1/8-T0-1002-F |
| A1A6R2 | 0757-0442 | 9 | | RESISTOR 10K 1% .125W F TC=0+-100 | 24546 | C4-1/8-T0-1002-F |
| A1A6R3 | 0757-0442 | 9 | | RESISTOR 10K 1% .125W F TC=0+-100 | 24546 | C4-1/8-T0-1002-F |
| A1A6R4 | 0757-0442 | 9 | | RESISTOR 10K 1% .125W F TC=0+-100 | 24546 | C4-1/8-T0-1002-F |
| A1A6R5 | 0757-0199 | 3 | | RESISTOR 21.5K 1% .125W F TC=0+-100 | 24546 | C4-1/8-T0-2152-F |
| A1A6R6 | 0698-7188 | 8 | | RESISTOR 10 1% .05W F TC=0+-100 | 24546 | C3-1/8-T0-10R-F |
| A1A6R7 | 0757-0438 | 3 | | RESISTOR 5.11K 1% .125W F TC=0+-100 | 24546 | C4-1/8-T0-5111-F |
| A1A6R8 | 0757-0397 | 3 | 1 | RESISTOR 68.1 1% .125W F TC=0+-100 | 24546 | C4-1/8-T0-68R1-F |
| A1A6R9 | 0757-0290 | 5 | | RESISTOR 6.19K 1% .125W F TC=0+-100 | 19701 | MF4C1/8-T0-6191-F |
| A1A6R10 | 0698-7188 | 8 | | RESISTOR 10 1% .05W F TC=0+-100 | 24546 | C3-1/8-T0-10R-F |
| A1A6R11 | 0698-7205 | 0 | 4 | RESISTOR 51.1 1% .05W F TC=0+-100 | 24546 | C3-1/8-T0-51R1-F |
| A1A6R12 | 0757-0401 | 0 | | RESISTOR 100 1% .125W F TC=0+-100 | 24546 | C4-1/8-T0-101-F |
| A1A6R13 | 0757-0389 | 3 | 1 | RESISTOR 33.2 1% .125W F TC=0+-100 | 24546 | C4-1/8-T0-33R2-F |
| A1A6R14 | 0698-8651 | 2 | 1 | RESISTOR 16.7 1% .05W F TC=0+-100 | 28480 | 0698-8651 |
| A1A6R15 | 0698-5068 | 9 | 1 | RESISTOR 50 1% .125W F TC=0+-25 | 28480 | 0698-5068 |
| A1A6R16 | 0698-7188 | 8 | | RESISTOR 10 1% .05W F TC=0+-100 | 24546 | C3-1/8-T0-10R-F |
| A1A6R17 | 0698-7205 | 0 | | RESISTOR 51.1 1% .05W F TC=0+-100 | 24546 | C3-1/8-T0-51R1-F |
| A1A6R18 | 0698-0083 | 8 | | RESISTOR 1.96K 1% .125W F TC=0+-100 | 24546 | C4-1/8-T0-1961-F |
| A1A6R19 | 0698-0083 | 8 | | RESISTOR 1.96K 1% .125W F TC=0+-100 | 24546 | C4-1/8-T0-1961-F |
| A1A6R20 | 0698-0083 | 8 | | RESISTOR 1.96K 1% .125W F TC=0+-100 | 24546 | C4-1/8-T0-1961-F |
| A1A6R21 | 0698-0083 | 8 | | RESISTOR 1.96K 1% .125W F TC=0+-100 | 24546 | C4-1/8-T0-1961-F |
| A1A6R22 | 0698-0083 | 8 | | RESISTOR 1.96K 1% .125W F TC=0+-100 | 24546 | C4-1/8-T0-1961-F |
| A1A6R23 | 0698-3136 | 8 | | RESISTOR 17.8K 1% .125W F TC=0+-100 | 24546 | C4-1/8-T0-1782-F |
| A1A6R24 | 0757-0418 | 9 | 3 | RESISTOR 619 1% .125W F TC=0+-100 | 24546 | C4-1/8-T0-619R-F |
| A1A6R25 | 0757-0797 | 7 | | RESISTOR 90.9 1% .5W F TC=0+-100 | 28480 | 0757-0797 |
| A1A6R26 | 0757-0394 | 0 | | RESISTOR 51.1 1% .125W F TC=0+-100 | 24546 | C4-1/8-T0-51R1-F |
| A1A6R27 | 0698-0084 | 9 | | RESISTOR 2.15K 1% .125W F TC=0+-100 | 24546 | C4-1/8-T0-2151-F |
| A1A6R28 | 0698-7188 | 8 | | RESISTOR 10 1% .05W F TC=0+-100 | 24546 | C3-1/8-T0-10R-F |
| A1A6R29 | 0698-7209 | 4 | 1 | RESISTOR 75 1% .05W F TC=0+-100 | 24546 | C3-1/8-T0-75R0-F |
| A1A6R30 | 0757-0403 | 2 | 1 | RESISTOR 121 1% .125W F TC=0+-100 | 24546 | C4-1/8-T0-121R-F |
| A1A6R31 | 0698-7236 | 7 | | RESISTOR 1K 1% .05W F TC=0+-100 | 24546 | C3-1/8-T0-1001-F |
| A1A6R32 | 0698-7233 | 4 | 3 | RESISTOR 750 1% .05W F TC=0+-100 | 24546 | C3-1/8-T0-750R-F |
| A1A6R33 | 0698-7205 | 0 | | RESISTOR 51.1 1% .05W F TC=0+-100 | 24546 | C3-1/8-T0-51R1-F |
| A1A6R34 | 0698-7224 | 3 | | RESISTOR 316 1% .05W F TC=0+-100 | 24546 | C3-1/8-T0-316R-F |
| A1A6R35 | 2100-2574 | 3 | | RESISTOR-TRMR 500 10% C SIDE-ADJ 1-TRN | 30983 | ET50X501 |
| A1A6R36 | 0698-0083 | 8 | | RESISTOR 1.96K 1% .125W F TC=0+-100 | 24546 | C4-1/8-T0-1961-F |
| A1A6R37 | 0698-7241 | 4 | 1 | RESISTOR 1.62K 1% .05W F TC=0+-100 | 24546 | C3-1/8-T0-1621-F |
| A1A6R38 | 0698-7238 | 9 | | RESISTOR 1.21K 1% .05W F TC=0+-100 | 24546 | C3-1/8-T0-1211-F |
| A1A6R39 | 0698-7224 | 3 | | RESISTOR 316 1% .05W F TC=0+-100 | 24546 | C3-1/8-T0-316R-F |
| A1A6R40 | 0698-8816 | 1 | 1 | RESISTOR 2.16 1% .125W F TC=0+-100 | 28480 | 0698-8816 |
| A1A6R41 | 0698-7260 | 7 | | RESISTOR 10K 1% .05W F TC=0+-100 | 24546 | C3-1/8-T0-1002-F |
| A1A6R42 | 0698-7230 | 1 | 1 | RESISTOR 562 1% .05W F TC=0+-100 | 24546 | C3-1/8-T0-562R-F |
| A1A6R43 | 0698-3438 | 3 | | RESISTOR 147 1% .125W F TC=0+-100 | 24546 | C4-1/8-T0-147R-F |
| A1A6R44 | 0698-3438 | 3 | | RESISTOR 147 1% .125W F TC=0+-100 | 24546 | C4-1/8-T0-147R-F |
| A1A6R45 | 0698-8817 | 2 | | RESISTOR 2.61 1% .125W F TC=0+-100 | 28480 | 0698-8817 |
| A1A6R46 | 0757-0402 | 1 | | RESISTOR 110 1% .125W F TC=0+-100 | 24546 | C4-1/8-T0-111-F |
| A1A6R47 | 0757-0180 | 2 | | RESISTOR 31.6 1% .125W F TC=0+-100 | 28480 | 0757-0180 |
| A1A6R48 | 0757-0378 | 0 | 1 | RESISTOR 11 1% .125W F TC=0+-100 | 19701 | MF4C1/8-T0-11R0-F |
| A1A6R49 | 0757-0280 | 3 | | RESISTOR 1K 1% .125W F TC=0+-100 | 24546 | C4-1/8-T0-1001-F |
| A1A6R50 | 0698-7260 | 7 | | RESISTOR 10K 1% .05W F TC=0+-100 | 24546 | C3-1/8-T0-1002-F |
| A1A6R51 | 0698-7251 | 6 | 1 | RESISTOR 4.22K 1% .05W F TC=0+-100 | 24546 | C3-1/8-T0-4221-F |
| A1A6R52 | 0698-7263 | 0 | | RESISTOR 13.3K 1% .05W F TC=0+-100 | 24546 | C3-1/8-T0-1332-F |
| A1A6R53 | 0698-7236 | 7 | | RESISTOR 1K 1% .05W F TC=0+-100 | 24546 | C3-1/8-T0-1001-F |
| A1A6R54 | 2100-2632 | 4 | 1 | RESISTOR-TRMR 100 10% C SIDE-ADJ 1-TRN | 30983 | ET50X101 |
| A1A6R55 | 0698-7220 | 9 | 1 | RESISTOR 215 1% .05W F TC=0+-100 | 24546 | C3-1/8-T0-215R-F |
| A1A6R56 | 0698-7205 | 0 | | RESISTOR 51.1 1% .05W F TC=0+-100 | 24546 | C3-1/8-T0-51R1-F |
| A1A6R57 | 0757-0418 | 9 | | RESISTOR 619 1% .125W F TC=0+-100 | 24546 | C4-1/8-T0-619R-F |
| A1A6R58 | 0698-7265 | 2 | | RESISTOR 16.2K 1% .05W F TC=0+-100 | 24546 | C3-1/8-T0-1622-F |
| A1A6R59 | 0698-7188 | 8 | | RESISTOR 10 1% .05W F TC=0+-100 | 24546 | C3-1/8-T0-10R-F |
| A1A6R60 | 0698-7229 | 8 | | RESISTOR 511 1% .05W F TC=0+-100 | 24546 | C3-1/8-T0-511R-F |

See introduction to this section for ordering information
*Indicates factory selected value
†Backdating information in Section VII



www.valuetronics.com

A1

Table 6-3. Replaceable Parts

| Reference Designation | HP Part Number | C D | Qty | Description | Mfr Code | Mfr Part Number |
|---|---|---|---|---|---|---|
| A1A6R61 | 0757-0405 | 4 | 2 | RESISTOR 162 1% .125W F TC=0+-100 | 24546 | C4-1/8-T0-162R-F |
| A1A6R62 | 0757-0405 | 4 | | RESISTOR 162 1% .125W F TC=0+-100 | 24546 | C4-1/8-T0-162R-F |
| A1A6R63 | 0698-3132 | 4 | | RESISTOR 261 1% .125W F TC=0+-100 | 24546 | C4-1/8-T0-2610-F |
| A1A6R64 | 0683-1055 | 5 | 1 | RESISTOR 1M 5% .25W FC TC=-800/+900 | 01121 | CB1055 |
| A1A6R65 | 0698-7212 | 9 | | RESISTOR 100 1% .05W F TC=0+-100 | 24546 | C3-1/8-T0-100R-F |
| A1A6R66 | 0698-7260 | 7 | | RESISTOR 10K 1% .05W F TC=0+-100 | 24546 | C3-1/8-T0-1002-F |
| A1A6R67 | 0698-7288 | 9 | 1 | RESISTOR 147K 1% .05W F TC=0+-100 | 24546 | C3-1/8-T0-1473-F |
| A1A6R68 | 0698-0083 | 8 | | RESISTOR 1.96K 1% .125W F TC=0+-100 | 24546 | C4-1/8-T0-1961-F |
| A1A6R69 | 0698-7233 | 4 | | RESISTOR 750 1% .05W F TC=0+-100 | 24546 | C3-1/8-T0-750R-F |
| A1A6R70 | 2100-2574 | 3 | | RESISTOR-TRMR 500 10% C SIDE-ADJ 1-TRN | 30983 | ET50X501 |
| A1A6R71 | 0698-3152 | 8 | | RESISTOR 3.48K 1% .125W F TC=0+-100 | 24546 | C4-1/8-T0-3481-F |
| A1A6R72 | 0757-0462 | 3 | 1 | RESISTOR 75K 1% .125W F TC=0+-100 | 24546 | C4-1/8-T0-7502-F |
| A1A6R73 | 0698-0083 | 8 | | RESISTOR 1.96K 1% .125W F TC=0+-100 | 24546 | C4-1/8-T0-1961-F |
| A1A6R74 | 0757-0418 | 9 | | RESISTOR 619 1% .125W F TC=0+-100 | 24546 | C4-1/8-T0-619R-F |
| A1A6R75 | 0757-0416 | 7 | | RESISTOR 511 1% .125W F TC=0+-100 | 24546 | C4-1/8-T0-511R-F |
| A1A6R76 | 0698-3155 | 1 | | RESISTOR 4.64K 1% .125W F TC=0+-100 | 24546 | C4-1/8-T0-4641-F |
| A1A6R77 | 0698-7232 | 3 | 1 | RESISTOR 681 1% .05W F TC=0+-100 | 24546 | C3-1/8-T0-681R-F |
| A1A6R78 | 0698-3447 | 4 | | RESISTOR 422 1% .125W F TC=0+-100 | 24546 | C4-1/8-T0-422R-F |
| A1A6R79 | 0698-7188 | 8 | | RESISTOR 10 1% .05W F TC=0+-100 | 24546 | C3-1/8-T0-10R-F |
| A1A6R80 | 0698-7216 | 3 | | RESISTOR 147 1% .05W F TC=0+-100 | 24546 | C3-1/8-T0-147R-F |
| A1A6R81 | 0698-3156 | 2 | | RESISTOR 14.7K 1% .125W F TC=0+-100 | 24546 | C4-1/8-T0-1472-F |
| A1A6R82 | 0698-7260 | 7 | | RESISTOR 10K 1% .05W F TC=0+-100 | 24546 | C3-1/8-T0-1002-F |
| A1A6R83 | 0698-7233 | 4 | | RESISTOR 750 1% .05W F TC=0+-100 | 24546 | C3-1/8-T0-750R-F |
| A1A6R84 | 2100-2574 | 3 | | RESISTOR-TRMR 500 10% C SIDE-ADJ 1-TRN | 30983 | ET50X501 |
| A1A6TP1 | 1251-0600 | 0 | | CONNECTOR-SGL CONT PIN 1.14-MM-BSC-SZ SQ | 28480 | 1251-0600 |
| A1A6TP2 | 1251-0600 | 0 | | CONNECTOR-SGL CONT PIN 1.14-MM-BSC-SZ SQ | 28480 | 1251-0600 |
| A1A6TP3 | 1251-0600 | 0 | | CONNECTOR-SGL CONT PIN 1.14-MM-BSC-SZ SQ | 28480 | 1251-0600 |
| A1A6TP4 | 1251-0300 | 0 | | CONNECTOR-SGL CONT PIN 1.14-MM-BSC-SZ SQ | 28480 | 1251-0600 |
| A1A6TP5 | 1251-0600 | 0 | | CONNECTOR-SGL CONT PIN 1.14-MM-BSC-SZ SQ | 28480 | 1251-0600 |
| A1A6TP6 | 1251-0600 | 0 | | CONNECTOR-SGL CONT PIN 1.14-MM-BSC-SZ SQ | 28480 | 1251-0600 |
| A1A6TP7 | 1251-0600 | 0 | | CONNECTOR-SGL CONT PIN 1.14-MM-BSC-SZ SQ | 28480 | 1251-0600 |
| A1A6U1 | 1820-0919 | 1 | 1 | IC COMPTR ECL A/D DUAL | 04713 | MC1650L |
| A1A6U2 | 1826-0256 | 1 | 1 | IC COMPARATOR HS DUAL 14-DIP-P PKG | 18324 | NE522A |
| A1A6U3 | 1820-1374 | 4 | 2 | IC SWITCH ANLG QUAD 16-DIP-P PKG | 24355 | AD7510DIJN |
| A1A6U4 | 1826-0582 | 6 | | IC SWITCH ANLG QUAD 16-DIP-C PKG | 27014 | LF13201D |
| A1A6U5 | 1820-1445 | 0 | | IC LCH TTL LS 4-BIT | 01295 | SN74LS375N |
| A1A6U6 | 1820-1445 | 0 | | IC LCH TTL LS 4-BIT | 01295 | SN74LS375N |
| A1A6U7 | 1820-1374 | 4 | | IC SWITCH ANLG QUAD 16-DIP-P PKG | 24355 | AD7510DIJN |
| A1A6VR1 | 1902-0962 | 8 | | DIODE-ZNR 16V 5% DO-35 PD=.4W TC=+.087% | 28480 | 1902-0962 |
| A1A6VR2 | 1902-0951 | 5 | | DIODE-ZNR 5.1V 5% DO-35 PD=.4W TC=+.035% | 28480 | 1902-0951 |
| A1A6VR3 | 1902-0957 | 1 | 1 | DIODE-ZNR 9.1V 5% DO-35 PD=.4W TC=+.068% | 28480 | 1902-0957 |
| A1A7 | 08673-60032 | 9 | 1 | YTM DRIVER BOARD ASSEMBLY | 28480 | 08673-60032 |
| A1A7C1 | 0180-0291 | 3 | | CAPACITOR-FXD 1UF+-10% 35VDC TA | 56289 | 150D105X9035A2 |
| A1A7C2 | 0180-2141 | 6 | 4 | CAPACITOR-FXD 3.3UF+-10% 50VDC TA | 56289 | 150D335X9050B2 |
| A1A7C3 | 0180-0291 | 3 | | CAPACITOR-FXD 1UF+-10% 35VDC TA | 56289 | 150D105X9035A2 |
| A1A7C4 | 0180-2141 | 6 | | CAPACITOR-FXD 3.3UF+-10% 50VDC TA | 56289 | 150D335X9050B2 |
| A1A7C5 | 0160-4103 | 2 | | CAPACITOR-FXD 220PF +-5% 100VDC CER | 72982 | 8121-M100-C0G-221J |
| A1A7C6 | 0180-0197 | 8 | | CAPACITOR-FXD 2.2UF+-10% 20VDC TA | 56289 | 150D225X9020A2 |
| A1A7C7 | 0160-4387 | 4 | | CAPACITOR-FXD 47PF +-5% 200VDC CER 0+-30 | 28480 | 0160-4387 |
| A1A7C8 | 0180-0291 | 3 | | CAPACITOR-FXD 1UF+-10% 35VDC TA | 56289 | 150D105X9035A2 |
| A1A7C9 | 0160-0576 | 5 | | CAPACITOR-FXD .1UF +-20% 50VDC CER | 28480 | 0160-0576 |
| A1A7C10 | 0160-4387 | 4 | | CAPACITOR-FXD 47PF +-5% 200VDC CER 0+-30 | 28480 | 0160-4387 |
| A1A7C11 | 0160-2055 | 9 | | CAPACITOR-FXD .01UF +80-20% 100VDC CER | 28480 | 0160-2055 |
| A1A7C12 | 0160-2055 | 9 | | CAPACITOR-FXD .01UF +80-20% 100VDC CER | 28480 | 0160-2055 |
| A1A7C13 | 0160-4387 | 4 | | CAPACITOR-FXD 47PF +-5% 200VDC CER 0+-30 | 28480 | 0160-4387 |
| A1A7C14 | 0160-3491 | 9 | 1 | CAPACITOR-FXD .47UF +-20% 50VDC CER | 28480 | 0160-3491 |
| A1A7C15 | 0160-0576 | 5 | | CAPACITOR-FXD .1UF +-20% 50VDC CER | 28480 | 0160-0576 |
| A1A7C16 | 0160-4387 | 4 | | CAPACITOR-FXD 47PF +-5% 200VDC CER 0+-30 | 28480 | 0160-4387 |
| A1A7C17 | 0160-2055 | 9 | | CAPACITOR-FXD .01UF +80-20% 100VDC CER | 28480 | 0160-2055 |
| A1A7C18 | 0160-4387 | 4 | | CAPACITOR-FXD 47PF +-5% 200VDC CER 0+-30 | 28480 | 0160-4387 |
| A1A7C19 | 0160-2055 | 9 | | CAPACITOR-FXD .01UF +80-20% 100VDC CER | 28480 | 0160-2055 |
| A1A7C20 | 0160-4387 | 4 | | CAPACITOR-FXD 47PF +-5% 200VDC CER 0+-30 | 28480 | 0160-4387 |

See introduction to this section for ordering information
*Indicates factory selected value
†Backdating information in Section VII



www.valuetronics.com

A1

Table 6-3. Replaceable Parts

| Reference Designation | HP Part Number | CD | Qty | Description | Mfr Code | Mfr Part Number |
|---|---|---|---|---|---|---|
| A1A7C21 | 0160-2055 | 9 | | CAPACITOR-FXD .01UF +80-20% 100VDC CER | 28480 | 0160-2055 |
| A1A7C22 | 0160-0576 | 5 | | CAPACITOR-FXD .1UF +-20% 50VDC CER | 28480 | 0160-0576 |
| A1A7CR1 | 1901-0376 | 6 | 7 | DIODE-GEN PRP 35V 50MA DO-35 | 28480 | 1901-0376 |
| A1A7CR2 | 1901-0050 | 3 | | DIODE-SWITCHING 80V 200MA 2NS DO-35 | 28480 | 1901-0050 |
| A1A7CR3 | 1901-0050 | 3 | | DIODE-SWITCHING 80V 200MA 2NS DO-35 | 28480 | 1901-0050 |
| A1A7CR4 | 1901-0376 | 6 | | DIODE-GEN PRP 35V 50MA DO-35 | 28480 | 1901-0376 |
| A1A7CR5 | 1901-0376 | 6 | | DIODE-GEN PRP 35V 50MA DO-35 | 28480 | 1901-0376 |
| A1A7CR6 | 1901-0376 | 6 | | DIODE-GEN PRP 35V 50MA DO-35 | 28480 | 1901-0376 |
| A1A7CR7 | 1901-0376 | 6 | | DIODE-GEN PRP 35V 50MA DO-35 | 28480 | 1901-0376 |
| A1A7CR8 | 1901-0376 | 6 | | DIODE-GEN PRP 35V 50MA DO-35 | 28480 | 1901-0376 |
| A1A7CR9 | 1901-0050 | 3 | | DIODE-SWITCHING 80V 200MA 2NS DO-35 | 28480 | 1901-0050 |
| A1A7MP1 | 1480-0073 | 8 | | PIN-ROLL .062-IN-DIA .25-IN-LG BE-CU | 28480 | 1480-0073 |
| A1A7MP2 | 4040-0748 | 3 | | EXTR-PC BD BLK POLYC .062-BD-THKNS | 28480 | 4040-0748 |
| A1A7MP3 | 4040-0755 | 2 | 1 | EXTR-PC BD VIO POLYC .062-BD-THKNS | 28480 | 4040-0755 |
| A1A7Q1 | 1853-0462 | 8 | 1 | TRANSISTOR PNP 2N3635 SI TO-39 PD=1W | 01295 | 2N3635 |
| A1A7Q2 | 1854-0637 | 1 | | TRANSISTOR NPN 2N2219A SI TO-5 PD=800MW | 01295 | 2N2219A |
| A1A7Q3 | 1853-0459 | 3 | | TRANSISTOR PNP SI PD=625MW FT=200MHZ | 28480 | 1853-0459 |
| A1A7Q4 | 1854-0810 | 2 | | TRANSISTOR NPN SI PD=625MW FT=200MHZ | 28480 | 1854-0810 |
| A1A7Q5 | 1855-0020 | 8 | 3 | TRANSISTOR J-FET N-CHAN D-MODE TO-18 SI | 28480 | 1855-0020 |
| A1A7Q6 | 1855-0020 | 8 | | TRANSISTOR J-FET N-CHAN D-MODE TO-18 SI | 28480 | 1855-0020 |
| A1A7Q7 | 1855-0020 | 8 | | TRANSISTOR J-FET N-CHAN D-MODE TO-18 SI | 28480 | 1855-0020 |
| A1A7Q8 | 1854-0810 | 2 | | TRANSISTOR NPN SI PD=625MW FT=200MHZ | 28480 | 1854-0810 |
| A1A7Q9 | 1853-0314 | 9 | | TRANSISTOR PNP 2N2905A SI TO-39 PD=600MW | 04713 | 2N2905A |
| A1A7Q10 | 1854-0712 | 3 | 1 | TRANSISTOR-DUAL NPN PD=1.8W | 28480 | 1854-0712 |
| A1A7Q11 | 1854-0810 | 2 | | TRANSISTOR NPN SI PD=625MW FT=200MHZ | 28480 | 1854-0810 |
| A1A7Q12 | 1853-0459 | 3 | | TRANSISTOR PNP SI PD=625MW FT=200MHZ | 28480 | 1853-0459 |
| A1A7R1 | 0698-0085 | 0 | | RESISTOR 2.61K 1% .125W F TC=0+-100 | 24546 | C4-1/8-T0-2611-F |
| A1A7R2 | 0757-0288 | 1 | | RESISTOR 9.09K 1% .125W F TC=0+-100 | 19701 | MF4C1/8-T0-9091-F |
| A1A7R3 | 0698-3334 | 8 | 1 | RESISTOR 178 1% .5W F TC=0+-100 | 28480 | 0698-3334 |
| A1A7R4 | 0757-0814 | 9 | 1 | RESISTOR 511 1% .5W F TC=0+-100 | 28480 | 0757-0814 |
| A1A7R5 | 0811-2870 | 7 | 2 | RESISTOR 1.96K 1% .05W PWW TC=0+-10 | 14140 | 1409-1/20-D-1961-F |
| A1A7R6 | 0757-0421 | 4 | | RESISTOR 825 1% .125W F TC=0+-100 | 24546 | C4-1/8-T0-825R-F |
| A1A7R7 | 0811-3372 | 6 | 1 | RESISTOR 1.71K 1% .05W PWW TC=0+-10 | 28480 | 0811-3372 |
| A1A7R8 | 2100-3351 | 6 | | RESISTOR-TRMR 500 10% C SIDE-ADJ 1-TRN | 28480 | 2100-3351 |
| A1A7R9 | 0811-3598 | 8 | 1 | RESISTOR-18.5K 1% .125W TC=0+-2PPM/C | 28480 | 0811-3598 |
| A1A7R10 | 0757-0280 | 3 | | RESISTOR 1K 1% .125W F TC=0+-100 | 24546 | C4-1/8-T0-1001-F |
| A1A7R11 | 0757-0280 | 3 | | RESISTOR 1K 1% .125W F TC=0+-100 | 24546 | C4-1/8-T0-1001-F |
| A1A7R12 | 0757-0464 | 5 | | RESISTOR 90.9K 1% .125W F TC=0+-100 | 24546 | C4-1/8-T0-9092-F |
| A1A7R13 | 0698-3439 | 4 | 1 | RESISTOR 178 1% .125W F TC=0+-100 | 24546 | C4-1/8-T0-178R-F |
| A1A7R14 | 2100-3152 | 5 | 1 | RESISTOR-TRMR 5K 10% MF SIDE-ADJ 25-TRN | 28480 | 2100-3152 |
| A1A7R15 | 0757-0401 | 0 | | RESISTOR 100 1% .125W F TC=0+-100 | 24546 | C4-1/8-T0-101-F |
| A1A7R16 | 0757-0317 | 7 | | RESISTOR 1.33K 1% .125W F TC=0+-100 | 24546 | C4-1/8-T0-1331-F |
| A1A7R17 | 2100-3103 | 6 | | RESISTOR-TRMR 10K 10% C SIDE-ADJ 17-TRN | 02111 | 43P103 |
| A1A7R18 | 2100-3103 | 6 | | RESISTOR-TRMR 10K 10% C SIDE-ADJ 17-TRN | 02111 | 43P103 |
| A1A7R19 | 2100-3103 | 6 | | RESISTOR TRMR 10K 10% C SIDE-ADJ 17-TRN | 02111 | 43P103 |
| A1A7R20 | 0698-7260 | 7 | | RESISTOR 10K 1% .05W F TC=0+-100 | 24546 | C3-1/8-T0-1002-F |
| A1A7R21 | 0698-7260 | 7 | | RESISTOR 10K 1% .05W F TC=0+-100 | 24546 | C3-1/8-T0-1002-F |
| A1A7R22 | 0698-7260 | 7 | | RESISTOR 10K 1% .05W F TC=0+-100 | 24546 | C3-1/8-T0-1002-F |
| A1A7R23 | 0698-7260 | 7 | | RESISTOR 10K 1% .05W F TC=0+-100 | 24546 | C3-1/8-T0-1002-F |
| A1A7R24 | 0757-0419 | 0 | | RESISTOR 681 1% .125W F TC=0+-100 | 24546 | C4-1/8-T0-681R-F |
| A1A7R25 | 0811-3373 | 7 | 3 | RESISTOR 17.8K .1% .05W PWW TC=0+-10 | 28480 | 0811-3373 |
| A1A7R26 | 0811-3373 | 7 | | RESISTOR 17.8K .1% .05W PWW TC=0+-10 | 28480 | 0811-3373 |
| A1A7R27 | 0811-3373 | 7 | | RESISTOR 17.8K .1% .05W PWW TC=0+-10 | 28480 | 0811-3373 |
| A1A7R28 | 0757-0442 | 9 | | RESISTOR 10K 1% .125W F TC=0+-100 | 24546 | C4-1/8-T0-1002-F |
| A1A7R29 | 0757-0442 | 9 | | RESISTOR 10K 1% .125W F TC=0+-100 | 24546 | C4-1/8-T0-1002-F |
| A1A7R30 | 0757-0442 | 9 | | RESISTOR 10K 1% .125W F TC=0+-100 | 24546 | C4-1/8-T0-1002-F |
| A1A7R31 | 0811-3369 | 1 | 2 | RESISTOR 12K .1% .125W PWW TC=0+-10 | 28480 | 0811-3369 |
| A1A7R32 | 0811-3359 | 9 | 4 | RESISTOR 12.5K .1% .05W PWW TC=0+-5 | 28480 | 0811-3359 |
| A1A7R33 | 0811-3369 | 1 | | RESISTOR 12K .1% .125W PWW TC=0+-10 | 28480 | 0811-3369 |
| A1A7R34 | 0757-0417 | 8 | 1 | RESISTOR 562 1% .125W F TC=0+-100 | 24546 | C4-1/8-T0-562R-F |
| A1A7R35 | 0811-3366 | 8 | 4 | RESISTOR 5K .1% .05W PWW TC=0+-2 | 28480 | 0811-3366 |
| A1A7R36 | 0811-3366 | 8 | | RESISTOR 5K .1% .05W PWW TC=0+-2 | 28480 | 0811-3366 |
| A1A7R37 | 0811-3366 | 8 | | RESISTOR 5K .1% .05W PWW TC=0+-2 | 28480 | 0811-3366 |
| A1A7R38 | 0811-3366 | 8 | | RESISTOR 5K .1% .05W PWW TC=0+-2 | 28480 | 0811-3366 |
| A1A7R39 | 0757-0317 | 7 | | RESISTOR 1.33K 1% .125W F TC=0+-100 | 24546 | C4-1/8-T0-1331-F |
| A1A7R40 | 0698-3162 | 0 | 1 | RESISTOR 46.4K 1% .125W F TC=0+-100 | 24546 | C4-1/8-T0-4642-F |

See introduction to this section for ordering information
*Indicates factory selected value
†Backdating information in Section VII



www.valuetronics.com

A1

Table 6-3. Replaceable Parts

| Reference Designation | HP Part Number | CD | Qty | Description | Mfr Code | Mfr Part Number |
|---|---|---|---|---|---|---|
| A1A7R41 | 0757-0439 | 4 | | RESISTOR 6.81K 1% .125W F TC=0+-100 | 24546 | C4-1/8-T0-6811-F |
| A1A7R42 | 0811-3368 | 0 | 1 | RESISTOR 100K 1% .05W PWW TC=0+-10 | 28480 | 0811-3368 |
| A1A7R43 | 0811-0648 | 3 | 2 | RESISTOR 50K .01% .125W PWW TC=0+-10 | 28480 | 0811-0648 |
| A1A7R44 | 0811-0648 | 3 | | RESISTOR 50K .01% .125W PWW TC=0+-10 | 28480 | 0811-0648 |
| A1A7R45 | 0757-0401 | 0 | | RESISTOR 100 1% .125W F TC=0+-100 | 24546 | C4-1/8-T0-101-F |
| A1A7R46 | 0811-2870 | 7 | | RESISTOR 1.96K 1% .05W PWW TC=0+-10 | 14140 | 1409-1/20-D-1961-F |
| A1A7R47 | 0698-5446 | 7 | 1 | RESISTOR 31.6K .25% .125W F TC=0+-50 | 28480 | 0698-5446 |
| A1A7R48 | 0757-0401 | 0 | | RESISTOR 100 1% .125W F TC=0+-100 | 24546 | C4-1/8-T0-101-F |
| A1A7R49 | 0757-0289 | 2 | | RESISTOR 13.3K 1% .125W F TC=0+-100 | 19701 | MF4C1/8-T0-1332-F |
| A1A7R50 | 0757-0416 | 7 | | RESISTOR 511 1% .125W F TC=0+-100 | 24546 | C4-1/8-T0-511R-F |
| A1A7R51 | 2100-3274 | 2 | | RESISTOR-TRMR 10K 10% C SIDE-ADJ 1-TRN | 28480 | 2100-3274 |
| A1A7R52 | 0757-0401 | 0 | | RESISTOR 100 1% .125W F TC=0+-100 | 24546 | C4-1/8-T0-101-F |
| A1A7R53 | 0811-2675 | 0 | 2 | RESISTOR 1K .02% .2W PWW TC=0+-10 | 14140 | 1283-1/20-D-1001-Q |
| A1A7R54 | 2100-3274 | 2 | | RESISTOR-TRMR 10K 10% C SIDE-ADJ 1-TRN | 28480 | 2100-3274 |
| A1A7R55 | 2100-3274 | 2 | | RESISTOR-TRMR 10K 10% C SIDE-ADJ 1-TRN | 28480 | 2100-3274 |
| A1A7R56 | 0698-3151 | 7 | | RESISTOR 2.87K 1% .125W F TC=0+-100 | 24546 | C4-1/8-T0-2871-F |
| A1A7R57 | 0811-3202 | 1 | | RESISTOR 30.615K .1% .05W PWW TC=0+-10 | 14140 | 1409-1/40-30615R-B |
| A1A7R58 | 0811-3370 | 4 | 2 | RESISTOR 20K 1% .05W PWW TC=0+-10 | 28480 | 0811-3370 |
| A1A7R59 | 0698-3151 | 7 | | RESISTOR 2.87K 1% .125W F TC=0+-100 | 24546 | C4-1/8-T0-2871-F |
| A1A7R60 | 0811-3370 | 4 | | RESISTOR 20K 1% .05W PWW TC=0+-10 | 28480 | 0811-3370 |
| A1A7R61 | 0811-3135 | 9 | 3 | RESISTOR 10K .1% .125W PWW TC=0+-10 | 28480 | 0811-3135 |
| A1A7R62 | 0811-3135 | 9 | | RESISTOR 10K .1% .125W PWW TC=0+-10 | 28480 | 0811-3135 |
| A1A7R63 | 0811-3396 | 4 | 1 | RESISTOR 11K 1% .05W PWW TC=0+-2 | 28480 | 0811-3396 |
| A1A7R64 | 0811-3135 | 9 | | RESISTOR 10K .1% .125W PWW TC=0+-10 | 28480 | 0811-3135 |
| A1A7R65 | 0757-0401 | 0 | | RESISTOR 100 1% .125W F TC=0+-100 | 24546 | C4-1/8-T0-101-F |
| A1A7R66 | 2100-3103 | 6 | | RESISTOR-TRMR 10K 10% C SIDE-ADJ 17-TRN | 02111 | 43P103 |
| A1A7R67 | 2100-3103 | 6 | | RESISTOR-TRMR 10K 10% C SIDE-ADJ 17-TRN | 02111 | 43P103 |
| A1A7R68 | 2100-3103 | 6 | | RESISTOR-TRMR 10K 10% C SIDE-ADJ 17-TRN | 02111 | 43P103 |
| A1A7R69 | 2100-3103 | 6 | | RESISTOR-TRMR 10K 10% C SIDE-ADJ 17-TRN | 02111 | 43P103 |
| A1A7R70 | 0811-2675 | 0 | | RESISTOR 1K .02% .2W PWW TC=0+-10 | 14140 | 1283-1/20-D-1001-Q |
| A1A7TP1 | 1251-0600 | 0 | | CONNECTOR-SGL CONT PIN 1.14-MM-BSC-SZ SQ | 28480 | 1251-0600 |
| A1A7TP2 | 1251-0600 | 0 | | CONNECTOR-SGL CONT PIN 1.14-MM-BSC-SZ SQ | 28480 | 1251-0600 |
| A1A7TP3 | 1251-0600 | 0 | | CONNECTOR-SGL CONT PIN 1.14-MM-BSC-SZ SQ | 28480 | 1251-0600 |
| A1A7TP4 | 1251-0600 | 0 | | CONNECTOR-SGL CONT PIN 1.14-MM-BSC-SZ SQ | 28480 | 1251-0600 |
| A1A7TP5 | 1251-0600 | 0 | | CONNECTOR-SGL CONT PIN 1.14-MM-BSC-SZ SQ | 28480 | 1251-0600 |
| A1A7TP6 | 1251-0600 | 0 | | CONNECTOR-SGL CONT PIN 1.14-MM-BSC-SZ SQ | 28480 | 1251-0600 |
| A1A7U1 | 1820-0223 | 0 | 7 | IC OP AMP GP TO-99 PKG | 3L585 | CA301AT |
| A1A7U2 | 1820-0223 | 0 | | IC OP AMP GP TO-99 PKG | 3L585 | CA301AT |
| A1A7U3 | 1826-0229 | 8 | 1 | IC OP AMP LOW-DRIFT TO-99 PKG | 06665 | OP-05CJ |
| A1A7U4 | 1826-0582 | 6 | | IC SWITCH ANLG QUAD 16-DIP-C PKG | 27014 | LF13201D |
| A1A7U5 | 1826-0582 | 6 | | IC SWITCH ANLG QUAD 16-DIP-C PKG | 27014 | LF13201D |
| A1A7U6 | 1826-0582 | 6 | | IC SWITCH ANLG QUAD 16-DIP-C PKG | 27014 | LF13201D |
| A1A7U7 | 1820-0223 | 0 | | IC OP AMP GP TO-99 PKG | 3L585 | CA301AT |
| A1A7U8 | 1820-0223 | 0 | | IC OP AMP GP TO-99 PKG | 3L585 | CA301AT |
| A1A7U9 | 1820-0223 | 0 | | IC OP AMP GP TO-99 PKG | 3L585 | CA301AT |
| A1A7U10 | 1820-0223 | 0 | | IC OP AMP GP TO-99 PKG | 3L585 | CA301AT |
| A1A7U11 | 1820-0223 | 0 | | IC OP AMP GP TO-99 PKG | 3L585 | CA301AT |
| A1A7VR1 | 1902-0958 | 2 | 1 | DIODE-ZNR 10V 5% DO-35 PD=.4W TC=+.075% | 28480 | 1902-0958 |
| A1A7VR2 | 1902-0680 | 7 | 1 | DIODE-ZNR 1N827 6.2V 5% DO-7 PD=.4W | 24046 | 1N827 |
| A1A7VR3 | 1902-0956 | 0 | 1 | DIODE-ZNR 8.2V 5% DO-35 PD=.4W TC=+.065% | 28480 | 1902-0956 |
| A1A7VR4 | 1902-0965 | 1 | 1 | DIODE-ZNR 20V 5% DO-35 PD=.4W TC=+.092% | 28480 | 1902-0965 |
| A1A8 | 08673-60033 | 0 | 1 | SRD BIAS BOARD | 28480 | 08673-60033 |
| A1A8C1 | 0180-0291 | 3 | | CAPACITOR-FXD 1UF+-10% 35VDC TA | 56289 | 150D105X9035A2 |
| A1A8C2 | 0180-0197 | 8 | | CAPACITOR-FXD 2.2UF+-10% 20VDC TA | 56289 | 150D225X9020A2 |
| A1A8C3 | 0180-2141 | 6 | | CAPACITOR-FXD 3.3UF+-10% 50VDC TA | 56289 | 150D335X9050B2 |
| A1A8C4 | 0180-2141 | 6 | | CAPACITOR-FXD 3.3UF+-10% 50VDC TA | 56289 | 150D335X9050B2 |
| A1A8C5 | 0160-0570 | 9 | | CAPACITOR-FXD 220PF +-20% 100VDC CER | 20932 | 5024EM100RD221M |
| A1A8C6 | 0160-3879 | 7 | | CAPACITOR-FXD .01UF +-20% 100VDC CER | 28480 | 0160-3879 |
| A1A8C7 | 0160-3879 | 7 | | CAPACITOR-FXD .01UF +-20% 100VDC CER | 28480 | 0160-3879 |
| A1A8C8 | 0160-0576 | 5 | | CAPACITOR-FXD .1UF +-20% 50VDC CER | 28480 | 0160-0576 |
| A1A8C9 | 0180-0291 | 3 | | CAPACITOR-FXD 1UF+-10% 35VDC TA | 56289 | 150D105X9035A2 |
| A1A8C10 | 0180-0291 | 3 | | CAPACITOR-FXD 1UF+-10% 35VDC TA | 56289 | 150D105X9035A2 |

See introduction to this section for ordering information
*Indicates factory selected value
†Backdating information in Section VII



www.valuetronics.com

A1

Table 6-3. Replaceable Parts

| Reference Designation | HP Part Number | C D | Qty | Description | Mfr Code | Mfr Part Number |
|---|---|---|---|---|---|---|
| A1A8C11 | 0160-3876 | 4 | | CAPACITOR-FXD 47PF +-20% 200VDC CER | 28480 | 0160-3876 |
| A1A8C12 | 0180-2661 | 5 | | CAPACITOR-FXD 1UF+-10% 50VDC TA | 25088 | D1R0G51A50K |
| A1A8C13 | 0160-0571 | 0 | 5 | CAPACITOR-FXD 470PF +-20% 100VDC CER | 28480 | 0160-0571 |
| A1A8C14 | 0160-3879 | 7 | | CAPACITOR-FXD .01UF +-20% 100VDC CER | 28480 | 0160-3879 |
| A1A8C15 | 0160-0571 | 0 | | CAPACITOR-FXD 470PF +-20% 100VDC CER | 28480 | 0160-0571 |
| A1A8C16 | 0160-3877 | 5 | | CAPACITOR-FXD 100PF +-20% 200VDC CER | 28480 | 0160-3877 |
| A1A8C17 | 0160-0571 | 0 | | CAPACITOR-FXD 470PF +-20% 100VDC CER | 28480 | 0160-0571 |
| A1A8C18 | 0160-0571 | 0 | | CAPACITOR-FXD 470PF +-20% 100VDC CER | 28480 | 0160-0571 |
| A1A8C19 | 0160-0571 | 0 | | CAPACITOR-FXD 470PF +-20% 100VDC CER | 28480 | 0160-0571 |
| A1A8C20 | 0160-3877 | 5 | | CAPACITOR-FXD 100PF +-20% 200VDC CER | 28480 | 0160-3877 |
| A1A8CR1 | 1901-0376 | 6 | | DIODE-GEN PRP 35V 50MA DO-35 | 28480 | 1901-0376 |
| A1A8L1 | 9140-0210 | 1 | 1 | INDUCTOR RF-CH-MLD 100UH 5% .166DX.385LG | 28480 | 9140-0210 |
| A1A8MP1 | 1480-0073 | 6 | | PIN-ROLL .062-IN-DIA .25-IN-LG BE-CU | 28480 | 1480-0073 |
| A1A8MP2 | 4040-0747 | 2 | 1 | EXTR-PC BD GRA POLYC .062-BD-THKNS | 28480 | 4040-0747 |
| A1A8MP3 | 4040-0748 | 3 | | EXTR-PC BD BLK POLYC .062-BD-THKNS | 28480 | 4040-0748 |
| A1A8Q1 | 1853-0459 | 3 | | TRANSISTOR PNP SI PD=625MW FT=200MHZ | 28480 | 1853-0459 |
| A1A8Q2 | 1853-0459 | 3 | | TRANSISTOR PNP SI PD=625MW FT=200MHZ | 28480 | 1853-0459 |
| A1A8Q3 | 1853-0459 | 3 | | TRANSISTOR PNP SI PD=625MW FT=200MHZ | 28480 | 1853-0459 |
| A1A8Q4 | 1853-0459 | 3 | | TRANSISTOR PNP SI PD=625MW FT=200MHZ | 28480 | 1853-0459 |
| A1A8Q5 | 1853-0459 | 3 | | TRANSISTOR PNP SI PD=625MW FT=200MHZ | 28480 | 1853-0459 |
| A1A8Q6 | 1853-0459 | 3 | | TRANSISTOR PNP SI PD=625MW FT=200MHZ | 28480 | 1853-0459 |
| A1A8Q7 | 1854-0477 | 7 | | TRANSISTOR NPN 2N2222A SI TO-18 PD=500MW | 04713 | 2N2222A |
| A1A8Q8 | 1853-0459 | 3 | | TRANSISTOR PNP SI PD=625MW FT=200MHZ | 28480 | 1853-0459 |
| A1A8Q9 | 1853-0459 | 3 | | TRANSISTOR PNP SI PD=625MW FT=200MHZ | 28480 | 1853-0459 |
| A1A8Q10 | 1853-0459 | 3 | | TRANSISTOR PNP SI PD=625MW FT=200MHZ | 28480 | 1853-0459 |
| A1A8Q11 | 1853-0459 | 3 | | TRANSISTOR PNP SI PD=625MW FT=200MHZ | 28480 | 1853-0459 |
| A1A8Q12 | 1854-0810 | 2 | | TRANSISTOR NPN SI PD=625MW FT=200MHZ | 28480 | 1854-0810 |
| A1A8Q13 | 1854-0810 | 2 | | TRANSISTOR NPN SI PD=625MW FT=200MHZ | 28480 | 1854-0810 |
| A1A8Q14 | 1854-0810 | 2 | | TRANSISTOR NPN SI PD=625MW FT=200MHZ | 28480 | 1854-0810 |
| A1A8R1 | 0757-0346 | 2 | | RESISTOR 10 1% .125W F TC=0+-100 | 24546 | C4-1/8-T0-10R0-F |
| A1A8R2 | 0757-0438 | 3 | | RESISTOR 5.11K 1% .125W F TC=0+-100 | 24546 | C4-1/8-T0-5111-F |
| A1A8R3 | 0698-3152 | 8 | | RESISTOR 3.48K 1% .125W F TC=0+-100 | 24546 | C4-1/8-T0-3481-F |
| A1A8R4 | 0757-0346 | 2 | | RESISTOR 10 1% .125W F TC=0+-100 | 24546 | C4-1/8-T0-10R0-F |
| A1A8R5 | 0757-0346 | 2 | | RESISTOR 10 1% .125W F TC=0+-100 | 24546 | C4-1/8-T0-10R0-F |
| A1A8R6 | 0757-0346 | 2 | | RESISTOR 10 1% .125W F TC=0+-100 | 24546 | C4-1/8-T0-10R0-F |
| A1A8R7 | 0757-0401 | 0 | | RESISTOR 100 1% .125W F TC=0+-100 | 24546 | C4-1/8-T0-101-F |
| A1A8R8 | 0698-6360 | 6 | 3 | RESISTOR 10K .1% .125W F TC=0+-25 | 28480 | 0698-6360 |
| A1A8R9 | 0757-0401 | 0 | | RESISTOR 100 1% .125W F TC=0+-100 | 24546 | C4-1/8-T0-101-F |
| A1A8R10 | 2100-3056 | 8 | 7 | RESISTOR-TRMR 5K 10% C SIDE-ADJ 17-TRN | 02111 | 43P502 |
| A1A8R11 | 2100-3056 | 8 | | RESISTOR-TRMR 5K 10% C SIDE-ADJ 17-TRN | 02111 | 43P502 |
| A1A8R12 | 2100-3056 | 8 | | RESISTOR-TRMR 5K 10% C SIDE-ADJ 17-TRN | 02111 | 43P502 |
| A1A8R13 | 2100-3054 | 6 | 3 | RESISTOR-TRMR 50K 10% C SIDE-ADJ 17-TRN | 02111 | 43P503 |
| A1A8R14 | 2100-3054 | 6 | | RESISTOR-TRMR 50K 10% C SIDE-ADJ 17-TRN | 02111 | 43P503 |
| A1A8R15 | 2100-3054 | 6 | | RESISTOR-TRMR 50K 10% C SIDE-ADJ 17-TRN | 02111 | 43P503 |
| A1A8R16 | 0698-0083 | 8 | | RESISTOR 1.96K 1% .125W F TC=0+-100 | 24546 | C4-1/8-T0-1961-F |
| A1A8R17 | 0698-0083 | 8 | | RESISTOR 1.96K 1% .125W F TC=0+-100 | 24546 | C4-1/8-T0-1961-F |
| A1A8R18 | 0698-0083 | 8 | | RESISTOR 1.96K 1% .125W F TC=0+-100 | 24546 | C4-1/8-T0-1961-F |
| A1A8R19 | 0757-0289 | 2 | | RESISTOR 13.3K 1% .125W F TC=0+-100 | 19701 | MF4C1/8-T0-1332-F |
| A1A8R20 | 0757-0289 | 2 | | RESISTOR 13.3K 1% .125W F TC=0+-100 | 19701 | MF4C1/8-T0-1332-F |
| A1A8R21 | 0757-0289 | 2 | | RESISTOR 13.3K 1% .125W F TC=0+-100 | 19701 | MF4C1/8-T0-1332-F |
| A1A8R22 | 0757-0401 | 0 | | RESISTOR 100 1% .125W F TC=0+-100 | 24546 | C4-1/8-T0-101-F |
| A1A8R23 | 0757-0438 | 3 | | RESISTOR 5.11K 1% .125W F TC=0+-100 | 24546 | C4-1/8-T0-5111-F |
| A1A8R24 | 0757-0438 | 3 | | RESISTOR 5.11K 1% .125W F TC=0+-100 | 24546 | C4-1/8-T0-5111-F |
| A1A8R25 | 0757-0438 | 3 | | RESISTOR 5.11K 1% .125W F TC=0+-100 | 24546 | C4-1/8-T0-5111-F |
| A1A8R26 | 0757-0401 | 0 | | RESISTOR 100 1% .125W F TC=0+-100 | 24546 | C4-1/8-T0-101-F |
| A1A8R27 | 0811-3202 | 1 | | RESISTOR 30.615K .1% .05W PWW TC=0+-10 | 14140 | 1409-1/40-30615R-B |
| A1A8R28 | 0757-0280 | 3 | | RESISTOR 1K 1% .125W F TC=0+-100 | 24546 | C4-1/8-T0-1001-F |
| A1A8R29 | 0811-3138 | 2 | 3 | RESISTOR 25K .1% .125W PWW TC=0+-10 | 20940 | 114-1/16-2502-B |
| A1A8R30 | 0757-0441 | 8 | | RESISTOR 8.25K 1% .125W F TC=0+-100 | 24546 | C4-1/8-T0-8251-F |
| A1A8R31 | 2100-3103 | 6 | | RESISTOR-TRMR 10K 10% C SIDE-ADJ 17-TRN | 02111 | 43P103 |
| A1A8R32 | 2100-3056 | 8 | | RESISTOR-TRMR 5K 10% C SIDE-ADJ 17-TRN | 02111 | 43P502 |
| A1A8R33 | 2100-3056 | 8 | | RESISTOR-TRMR 5K 10% C SIDE-ADJ 17-TRN | 02111 | 43P502 |
| A1A8R34 | 0811-3360 | 2 | 5 | RESISTOR 25K .1% .05W PWW TC=0+-5 | 28480 | 0811-3360 |
| A1A8R35 | 0811-3360 | 2 | | RESISTOR 25K .1% .05W PWW TC=0+-5 | 28480 | 0811-3360 |

See introduction to this section for ordering information
*Indicates factory selected value
†Backdating information in Section VII



www.valuetronics.com

A1

Table 6-3. Replaceable Parts

| Reference Designation | HP Part Number | C D | Qty | Description | Mfr Code | Mfr Part Number |
|---|---|---|---|---|---|---|
| A1A8R36 | 0811-3138 | 2 | | RESISTOR 25K .1% .125W PWW TC=0+-10 | 20940 | 114-1/16-2502-B |
| A1A8R37 | 0811-3138 | 2 | | RESISTOR 25K .1% .125W PWW TC=0+-10 | 20940 | 114-1/16-2502-B |
| A1A8R38 | 0698-3150 | 6 | 2 | RESISTOR 2.37K 1% .125W F TC=0+-100 | 24546 | C4-1/8-T0-2371-F |
| A1A8R39 | 0811-3360 | 2 | | RESISTOR 25K .1% .05W PWW TC=0+-5 | 28480 | 0811-3360 |
| A1A8R40 | 0811-3360 | 2 | | RESISTOR 25K .1% .05W PWW TC=0+-5 | 28480 | 0811-3360 |
| A1A8R41 | 0811-3360 | 2 | | RESISTOR 25K .1% .05W PWW TC=0+-5 | 28480 | 0811-3360 |
| A1A8R42 | 0757-0465 | 6 | | RESISTOR 100K 1% .125W F TC=0+-100 | 24546 | C4-1/8-T0-1003-F |
| A1A8R43 | 0698-3157 | 3 | | RESISTOR 19.6K 1% .125W F TC=0+-100 | 24546 | C4-1/8-T0-1962-F |
| A1A8R44 | 0698-0083 | 8 | | RESISTOR 1.96K 1% .125W F TC=0+-100 | 24546 | C4-1/8-T0-1961-F |
| A1A8R45 | 0698-3157 | 3 | | RESISTOR 19.6K 1% .125W F TC=0+-100 | 24546 | C4-1/8-T0-1962-F |
| A1A8R46 | 0698-3158 | 4 | | RESISTOR 23.7K 1% .125W F TC=0+-100 | 24546 | C4-1/8-T0-2372-F |
| A1A8R47 | 0757-0288 | 1 | | RESISTOR 9.09K 1% .125W F TC=0+-100 | 19701 | MF4C1/8-T0-9091-F |
| A1A8R48 | 0698-3442 | 9 | 1 | RESISTOR 237 1% .125W F TC=0+-100 | 24546 | C4-1/8-T0-237R-F |
| A1A8R49 | 0757-0280 | 3 | | RESISTOR 1K 1% .125W F TC=0+-100 | 24546 | C4-1/8-T0-1001-F |
| A1A8R50 | 2100-3161 | 6 | 2 | RESISTOR-TRMR 20K 10% C SIDE-ADJ 17-TRN | 02111 | 43P203 |
| A1A8R51 | 0698-3160 | 8 | | RESISTOR 31.6K 1% .125W F TC=0+-100 | 24546 | C4-1/8-T0-3162-F |
| A1A8R52 | 0698-3136 | 8 | | RESISTOR 17.8K 1% .125W F TC=0+-100 | 24546 | C4-1/8-T0-1782-F |
| A1A8R53 | 0698-3156 | 2 | | RESISTOR 14.7K 1% .125W F TC=0+-100 | 24546 | C4-1/8-T0-1472-F |
| A1A8R54 | 0698-3153 | 9 | | RESISTOR 3.83K 1% .125W F TC=0+-100 | 24546 | C4-1/8-T0-3831-F |
| A1A8R55 | 2100-3094 | 4 | 2 | RESISTOR-TRMR 100K 10% C SIDE-ADJ 17-TRN | 02111 | 43P104 |
| A1A8R56 | 0811-3359 | 9 | | RESISTOR 12.5K .1% .05W PWW TC=0+-5 | 28480 | 0811-3359 |
| A1A8R57 | 0811-3359 | 9 | | RESISTOR 12.5K .1% .05W PWW TC=0+-5 | 28480 | 0811-3359 |
| A1A8R58 | 0811-3359 | 9 | | RESISTOR 12.5K .1% .05W PWW TC=0+-5 | 28480 | 0811-3359 |
| A1A8R59 | 0698-3160 | 8 | | RESISTOR 31.6K 1% .125W F TC=0+-100 | 24546 | C4-1/8-T0-3162-F |
| A1A8R60 | 0698-6358 | 2 | 1 | RESISTOR 100K .1% .125W F TC=0+-25 | 28480 | 0698-6358 |
| A1A8R61 | 2100-3103 | 6 | | RESISTOR-TRMR 10K 10% C SIDE-ADJ 17-TRN | 02111 | 43P103 |
| A1A8R62 | 2100-3056 | 9 | | RESISTOR-TRMR 5K 10% C SIDE-ADJ 17-TRN | 02111 | 43P502 |
| A1A8R63 | 2100-3056 | 9 | | RESISTOR-TRMR 5K 10% C SIDE-ADJ 17-TRN | 02111 | 43P502 |
| A1A8R64 | 0698-3159 | 5 | 1 | RESISTOR 26.1K 1% .125W F TC=0+-100 | 24546 | C4-1/8-T0-2612-F |
| A1A8R65 | 0757-0444 | 1 | | RESISTOR 12.1K 1% .125W F TC=0+-100 | 24546 | C4-1/8-T0-1212-F |
| A1A8R66 | 0698-0085 | 0 | | RESISTOR 2.61K 1% .125W F TC=0+-100 | 24546 | C4-1/8-T0-2611-F |
| A1A8R67 | 2100-3161 | 6 | | RESISTOR-TRMR 20K 10% C SIDE-ADJ 17-TRN | 02111 | 43P203 |
| A1A8R68 | 0698-3160 | 8 | | RESISTOR 31.6K 1% .125W F TC=0+-100 | 24546 | C4-1/8-T0-3162-F |
| A1A8R69 | 0811-3234 | 9 | 3 | RESISTOR 10K 1% .05W PWW TC=0+-10 | 20940 | 140-1/20-1002-F |
| A1A8R70 | 0811-3234 | 9 | | RESISTOR 10K 1% .05W PWW TC=0+-10 | 20940 | 140-1/20-1002-F |
| A1A8R71 | 0811-3234 | 9 | | RESISTOR 10K 1% .05W PWW TC=0+-10 | 20940 | 140-1/20-1002-F |
| A1A8R72 | 0698-3160 | 8 | | RESISTOR 31.6K 1% .125W F TC=0+-100 | 24546 | C4-1/8-T0-3162-F |
| A1A8R73 | 0698-3136 | 8 | | RESISTOR 17.8K 1% .125W F TC=0+-100 | 24546 | C4-1/8-T0-1782-F |
| A1A8R74 | 0757-0443 | 0 | 1 | RESISTOR 11K 1% .125W F TC=0+-100 | 24546 | C4-1/8-T0-1102-F |
| A1A8R75 | 0698-3154 | 0 | | RESISTOR 4.22K 1% .125W F TC=0+-100 | 24546 | C4-1/8-T0-4221-F |
| A1A8R76 | 0698-8642 | 1 | 1 | RESISTOR 56.2K .1% .125W F TC=0+-25 | 28480 | 0698-8642 |
| A1A8R77 | 0698-6866 | 7 | 1 | RESISTOR 2.182K .25% .125W F TC=0+-50 | 28480 | 0698-6866 |
| A1A8R78 | 0699-0272 | 9 | 2 | RESISTOR 75K .1% .125W F TC=0+-25 | 28480 | 0699-0272 |
| A1A8R79 | 0698-6838 | 3 | 2 | RESISTOR 3.88K .5% .125W F TC=0+-50 | 24546 | NC55-1/8-T2-3881-D |
| A1A8R80 | 0699-0272 | 9 | | RESISTOR 75K .1% .125W F TC=0+-25 | 28480 | 0699-0272 |
| A1A8R81 | 0698-6838 | 3 | | RESISTOR 3.88K .5% .125W F TC=0+-50 | 24546 | NC55-1/8-T2-3881-D |
| A1A8R82 | 2100-3094 | 4 | | RESISTOR-TRMR 100K 10% C SIDE-ADJ 17-TRN | 02111 | 43P104 |
| A1A8R83 | 0698-3160 | 8 | | RESISTOR 31.6K 1% .125W F TC=0+-100 | 24546 | C4-1/8-T0-3162-F |
| A1A8R84 | 2100-3154 | 7 | 4 | RESISTOR-TRMR 1K 10% C SIDE-ADJ 17-TRN | 02111 | 43P102 |
| A1A8R85 | 2100-3154 | 7 | | RESISTOR-TRMR 1K 10% C SIDE-ADJ 17-TRN | 02111 | 43P102 |
| A1A8R86 | 2100-3154 | 7 | | RESISTOR-TRMR 1K 10% C SIDE-ADJ 17-TRN | 02111 | 43P102 |
| A1A8R87 | 2100-3154 | 7 | | RESISTOR-TRMR 1K 10% C SIDE-ADJ 17-TRN | 02111 | 43P102 |
| A1A8R88 | 0698-3153 | 9 | | RESISTOR 3.83K 1% .125W F TC=0+-100 | 24546 | C4-1/8-T0-3831-F |
| A1A8R89 | 0757-1094 | 9 | | RESISTOR 1.47K 1% .125W F TC=0+-100 | 24546 | C4-1/8-T0-1471-F |
| A1A8R90 | 0698-6360 | 6 | | RESISTOR 10K .1% .125W F TC=0+-25 | 28480 | 0698-6360 |
| A1A8R91 | 0698-6360 | 6 | | RESISTOR 10K .1% .125W F TC=0+-25 | 28480 | 0698-6360 |
| A1A8R92 | 0757-0200 | 7 | 1 | RESISTOR 5.62K 1% .125W F TC=0+-100 | 24546 | C4-1/8-T0-5621-F |
| A1A8R93 | 0698-3150 | 6 | | RESISTOR 2.37K 1% .125W F TC=0+-100 | 24546 | C4-1/8-T0-2371-F |
| A1A8R94 | 0698-3260 | 9 | 1 | RESISTOR 464K 1% .125W F TC=0+-100 | 28480 | 0698-3260 |
| A1A8R95 | 0699-0096 | 5 | | RESISTOR 12K .1% .1W F TC=0+-10 | 28480 | 0699-0096 |
| A1A8R96 | 0698-8638 | 5 | 4 | RESISTOR 3.16K .1% .125W F TC=0+-25 | 28480 | 0698-8638 |
| A1A8R97 | 0698-8638 | 5 | | RESISTOR 3.16K .1% .125W F TC=0+-25 | 28480 | 0698-8638 |
| A1A8R98 | 0698-8638 | 5 | | RESISTOR 3.16K .1% .125W F TC=0+-25 | 28480 | 0698-8638 |
| A1A8R99 | 0698-8638 | 5 | | RESISTOR 3.16K .1% .125W F TC=0+-25 | 28480 | 0698-8638 |
| A1A8R100 | 0698-3156 | 2 | | RESISTOR 14.7K 1% .125W F TC=0+-100 | 24546 | C4-1/8-T0-1472-F |

See introduction to this section for ordering information
*Indicates factory selected value
†Backdating information in Section VII



www.valuetronics.com

A1

## Table 6-3. Replaceable Parts

| Reference Designation | HP Part Number | C D | Qty | Description | Mfr Code | Mfr Part Number |
|---|---|---|---|---|---|---|
| A1A8R101 | 0698-3156 | 2 | | RESISTOR 14.7K 1% .125W F TC=0+-100 | 24546 | C4-1/8-T0-1472-F |
| A1A8R102 | 0698-3156 | 2 | | RESISTOR 14.7K 1% .125W F TC=0+-100 | 24546 | C4-1/8-T0-1472-F |
| A1A8R103 | 0757-0442 | 9 | | RESISTOR 10K 1% .125W F TC=0+-100 | 24546 | C4-1/8-T0-1002-F |
| A1A8R104 | 0757-0442 | 9 | | RESISTOR 10K 1% .125W F TC=0+-100 | 24546 | C4-1/8-T0-1002-F |
| A1A8R105 | 0757-0442 | 9 | | RESISTOR 10K 1% .125W F TC=0+-100 | 24546 | C4-1/8-T0-1002-F |
| A1A8TP1 | 1251-0600 | 0 | | CONNECTOR-SGL CONT PIN 1.14-MM-BSC-SZ SQ | 28480 | 1251-0600 |
| A1A8TP2 | 1251-0600 | 0 | | CONNECTOR-SGL CONT PIN 1.14-MM-BSC-SZ SQ | 28480 | 1251-0600 |
| A1A8TP3 | 1251-0600 | 0 | | CONNECTOR-SGL CONT PIN 1.14-MM-BSC-SZ SQ | 28480 | 1251-0600 |
| A1A8TP4 | 1251-0600 | 0 | | CONNECTOR-SGL CONT PIN 1.14-MM-BSC-SZ SQ | 28480 | 1251-0600 |
| A1A8U1 | 1826-0217 | 4 | | IC OP AMP GP DUAL TO-99 PKG | 07933 | RC4558T |
| A1A8U2 | 1826-0582 | 6 | | IC SWITCH ANLG QUAD 16-DIP-C PKG | 27014 | LF13201D |
| A1A8U3 | 1826-0323 | 3 | 1 | IC OP AMP GP QUAD 14-DIP-C PKG | 28480 | 1826-0323 |
| A1A8U4 | 1826-0582 | 6 | | IC SWITCH ANLG QUAD 16-DIP-C PKG | 27014 | LF13201D |
| A1A8U5 | 1820-1445 | 0 | | IC LCH TTL LS 4-BIT | 01295 | SN74LS375N |
| A1A8U6 | 1826-0582 | 6 | | IC SWITCH ANLG QUAD 16-DIP-C PKG | 27014 | LF13201D |
| A1A8U7 | 1826-0217 | 4 | | IC OP AMP GP DUAL TO-99 PKG | 07933 | RC4558T |
| A1A8U8 | 1826-0217 | 4 | | IC OP AMP GP DUAL TO-99 PKG | 07933 | RC4558T |
| A1A8U9 | 1826-0059 | 2 | | IC OP AMP GP TO-99 PKG | 01295 | LM201AL |
| A1A8VR1 | 1902-0554 | 4 | 2 | DIODE-ZNR 10V 5% PD=1W IR=10UA | 28480 | 1902-0554 |
| A1A8VR2 | 1902-0579 | 3 | 1 | DIODE-ZNR 5.1V 5% PD=1W IR=10UA | 28480 | 1902-0579 |
| A1A8VR3 | 1902-0554 | 4 | | DIODE-ZNR 10V 5% PD=1W IR=10UA | 28480 | 1902-0554 |
| A1A9 | 08673-67001 | 6 | 1 | PREAMP ASSEMBLY | 28480 | 08673-67001 |
| | 08673-67201 | 8 | 1 | RESTORED 08673-67001 | 28480 | 08673-67201 |
| A1A10 | 08673-67010 | 7 | 1 | YTM ASSEMBLY(NON-FIELD REPAIRABLE PART) "C" ONLY | 28480 | 08673-67010 |
| | 08673-67009 | 4 | 1 | YTM ASSEMBLY(NON-FIELD REPAIRABLE PART) "D" ONLY. | 28480 | 08673-67009 |
| A1A10A1 | 08673-60027 | 2 | 1 | YTM HEATER BOARD ASSEMBLY | 28480 | 08673-60027 |
| A1A10A1C1 | 0160-0127 | 2 | | CAPACITOR-FXD 1UF +-20% 25VDC CER | 28480 | 0160-0127 |
| A1A10A1C2 | 0160-3876 | 4 | | CAPACITOR-FXD 47PF +-20% 200VDC CER | 28480 | 0160-3876 |
| A1A10A1C3 | 0160-2055 | 9 | | CAPACITOR-FXD .01UF +80-20% 100VDC CER | 28480 | 0160-2055 |
| A1A10A1C4 | | | | NOT ASSIGNED | | |
| A1A10A1C5 | 0160-3876 | 4 | | CAPACITOR-FXD 47PF +-20% 200VDC CER | 28480 | 0160-3876 |
| A1A10A1C6 | 0160-2055 | 9 | | CAPACITOR-FXD .01UF +80-20% 100VDC CER | 28480 | 0160-2055 |
| A1A10A1C7 | 0180-2104 | 1 | 1 | CAPACITOR-FXD 40UF+-20% 30VDC TA | 06001 | 69F2143G7 |
| A1A10A1C8 | 0160-0576 | 5 | | CAPACITOR-FXD .1UF +-20% 50VDC CER | 28480 | 0160-0576 |
| A1A10A1C9 | 0160-0576 | 5 | | CAPACITOR-FXD .1UF +-20% 50VDC CER | 28480 | 0160-0576 |
| A1A10A1CR1 | 1901-0050 | 3 | | DIODE-SWITCHING 80V 200MA 2NS DO-35 | 28480 | 1901-0050 |
| A1A10A1E1-A1A10A1E6 | 1251-3172 | 7 | 4 17 | CONNECTOR-SGL CONT SKT .03-IN-BSC-SZ RND | 28480 | 1251-3172 |
| A1A10A1J1 | 1250-0257 | 1 | 7 | CONNECTOR-RF SMB M PC 50-OHM | 28480 | 1250-0257 |
| A1A10A1J2 | 1200-0508 | 0 | 3 | SOCKET-IC 14-CONT DIP-SLDR | 28480 | 1200-0508 |
| A1A10A1Q1 | 1853-0314 | 9 | | TRANSISTOR PNP 2N2905A SI TO-39 PD=600MW | 04713 | 2N2905A |
| A1A10A1R1 | 0698-7252 | 7 | | RESISTOR 4.64K 1% .05W F TC=0+-100 | 24546 | C3-1/8-T0-4641-F |
| A1A10A1R2 | 0698-7260 | 7 | | RESISTOR 10K 1% .05W F TC=0+-100 | 24546 | C3-1/8-T0-1002-F |
| A1A10A1R3 | 0698-7260 | 7 | | RESISTOR 10K 1% .05W F TC=0+-100 | 24546 | C3-1/8-T0-1002-F |
| A1A10A1R4 | 0698-7188 | 8 | | RESISTOR 10 1% .05W F TC=0+-100 | 24546 | C3-1/8-T0-10R-F |
| A1A10A1R5 | 0698-7277 | 6 | | RESISTOR 51.1K 1% .05W F TC=0+-100 | 24546 | C3-1/8-T0-5112-F |
| A1A10A1R6 | 0698-7260 | 7 | | RESISTOR 10K 1% .05W F TC=0+-100 | 24546 | C3-1/8-T0-1002-F |
| A1A10A1R7 | 0698-7188 | 8 | | RESISTOR 10 1% .05W F TC=0+-100 | 24546 | C3-1/8-T0-10R-F |
| A1A10A1R8 | 0698-7212 | 9 | | RESISTOR 100 1% .05W F TC=0+-100 | 24546 | C3-1/8-T0-100R-F |
| A1A10A1R9 | 0698-7212 | 9 | | RESISTOR 100 1% .05W F TC=0+-100 | 24546 | C3-1/8-T0-100R-F |
| A1A10A1R10 | 0757-0288 | 1 | | RESISTOR 9.09K 1% .125W F TC=0+-100 | 19701 | MF4C1/8-T0-9091-F |
| A1A10A1R11 | 0699-0068 | 1 | 1 | RESISTOR-1.47M 1% .125W | 28480 | 0699-0068 |
| A1A10A1R12 | 0698-7237 | 8 | 1 | RESISTOR 1.1K 1% .05W F TC=0+-100 | 24546 | C3-1/8-T0-1101-F |
| A1A10A1R13 | 0757-0180 | 2 | | RESISTOR 31.6 1% .125W F TC=0+-100 | 28480 | 0757-0180 |
| A1A10A1TP1-A1A10A1TP9 | 0360-0535 | 0 | | TERMINAL TEST POINT PCB | 00000 | ORDER BY DESCRIPTION |

See introduction to this section for ordering information
*Indicates factory selected value
†Backdating information in Section VII



www.valuetronics.com

A1

Table 6-3. Replaceable Parts

| Reference Designation | HP Part Number | CD | Qty | Description | Mfr Code | Mfr Part Number |
|---|---|---|---|---|---|---|
| A1A10A1U1 | 1826-0059 | 2 | | IC OP AMP GP TO-99 PKG | 01295 | LM201AL |
| A1A10A1U2 | 1826-0025 | 2 | | IC OP AMP LOW-DRIFT TO-99 PKG | 27014 | LM208AH |
| A1A10A1VR1 | 1902-0176 | 6 | 1 | DIODE-ZNR 47V 5% PD=1W IR=5UA | 28480 | 1902-0176 |
| A1A11 | 08673-67004 | 9 | 1 | POWER AMP | 28480 | 08673-67004 |
| | 08673-67204 | 1 | 1 | RESTORED 08673-67004 | 28480 | 08673-67204 |
| A1A12 | 08673-60020 | 5 | 1 | MOTHERBOARD ASSEMBLY | 28480 | 08673-60020 |
| A1A12C1 | 0180-2207 | 5 | | CAPACITOR-FXD 100UF+-10% 10VDC TA | 56289 | 150D107X9010R2 |
| A1A12C2 | 0180-2207 | 5 | | CAPACITOR-FXD 100UF+-10% 10VDC TA | 56289 | 150D107X9010R2 |
| A1A12C3 | 0160-0570 | 9 | | CAPACITOR-FXD 220PF +-20% 100VDC CER | 20932 | 5024EM100RD221M |
| A1A12C4 | 0160-0570 | 9 | | CAPACITOR-FXD 220PF +-20% 100VDC CER | 20932 | 5024EM100RD221M |
| A1A12C5 | 0160-0570 | 9 | | CAPACITOR-FXD 220PF +-20% 100VDC CER | 20932 | 5024EM100RD221M |
| A1A12C6 | 0160-0570 | 9 | | CAPACITOR-FXD 220PF +-20% 100VDC CER | 20932 | 5024EM100RD221M |
| A1A12C7 | 0160-0570 | 9 | | CAPACITOR-FXD 220PF +-20% 100VDC CER | 20932 | 5024EM100RD221M |
| A1A12C8 | 0160-0570 | 9 | | CAPACITOR-FXD 220PF +-20% 100VDC CER | 20932 | 5024EM100RD221M |
| A1A12C9 | 0160-0570 | 9 | | CAPACITOR-FXD 220PF +-20% 100VDC CER | 20932 | 5024EM100RD221M |
| A1A12C10 | 0160-0570 | 9 | | CAPACITOR-FXD 220PF +-20% 100VDC CER | 20932 | 5024EM100RD221M |
| A1A12C11 | 0160-0570 | 9 | | CAPACITOR-FXD 220PF +-20% 100VDC CER | 20932 | 5024EM100RD221M |
| A1A12C12 | 0160-0570 | 9 | | CAPACITOR-FXD 220PF +-20% 100VDC CER | 20932 | 5024EM100RD221M |
| A1A12C13 | 0160-0570 | 9 | | CAPACITOR-FXD 220PF +-20% 100VDC CER | 20932 | 5024EM100RD221M |
| A1A12C14 | 0160-0570 | 9 | | CAPACITOR-FXD 220PF +-20% 100VDC CER | 20932 | 5024EM100RD221M |
| A1A12C15 | 0160-0570 | 9 | | CAPACITOR-FXD 220PF +-20% 100VDC CER | 20932 | 5024EM100RD221M |
| A1A12J1 | 1251-3906 | 4 | 1 | CONNECTOR 20-PIN M RECTANGULAR | 28480 | 1251-3906 |
| A1A12J2 | 1250-0257 | 1 | | CONNECTOR-RF SMB M PC 50-OHM | 28480 | 1250-0257 |
| A1A12J3 | 1250-0257 | 1 | | CONNECTOR-RF SMB M PC 50-OHM | 28480 | 1250-0257 |
| A1A12J4 | 1250-0257 | 1 | | CONNECTOR-RF SMB M PC 50-OHM | 28480 | 1250-0257 |
| A1A12J5 | 1200-0508 | 0 | | SOCKET-IC 14-CONT DIP-SLDR | 28480 | 1200-0508 |
| A1A12J6 | 1250-0257 | 1 | | CONNECTOR-RF SMB M PC 50-OHM | 28480 | 1250-0257 |
| A1A12J7 | 1250-0257 | 1 | | CONNECTOR-RF SMB M PC 50-OHM | 28480 | 1250-0257 |
| A1A12J8 | 1250-0257 | 1 | | CONNECTOR-RF SMB M PC 50-OHM | 28480 | 1250-0257 |
| A1A12J9 | 1200-0508 | 0 | | SOCKET-IC 14-CONT DIP-SLDR | 28480 | 1200-0508 |
| A1A12J10 | 1251-5649 | 7 | 1 | CONNECTOR 20-PIN M POST TYPE | 28480 | 1251-5649 |
| A1A12J11 | 1200-0812 | 9 | 1 | SOCKET-IC 16-CONT DIP DIP-SLDR | 28480 | 1200-0812 |
| A1A12J12 | 1251-5647 | 4 | 1 | CONNECTOR 6-PIN M POST TYPE | 28480 | 1251-5647 |
| A1A12MP1 | 0380-0688 | 6 | 2 | SPACER-RVT-ON .156-IN-LG .15-IN-ID | 00000 | ORDER BY DESCRIPTION |
| A1A12MP2 | 0590-0526 | 6 | 1 | THREADED INSERT-NUT 4-40 .065-IN-LG SST | 28480 | 0590-0526 |
| A1A12XA1 | 1251-1626 | 2 | 1 | CONNECTOR-PC EDGE 12-CONT/ROW 2-ROWS | 28480 | 1251-1626 |
| A1A12XA2 | 1251-2026 | 8 | 6 | CONNECTOR-PC EDGE 18-CONT/ROW 2-ROWS | 28480 | 1251-2026 |
| A1A12XA3 | 1251-1365 | 6 | 2 | CONNECTOR-PC EDGE 22-CONT/ROW 2-ROWS | 28480 | 1251-1365 |
| A1A12XA4 | 1251-2026 | 8 | | CONNECTOR-PC EDGE 18-CONT/ROW 2-ROWS | 28480 | 1251-2026 |
| A1A12XA5 | 1251-1365 | 6 | | CONNECTOR-PC EDGE 22-CONT/ROW 2-ROWS | 28480 | 1251-1365 |
| A1A12XA6 | 1251-2026 | 8 | | CONNECTOR-PC EDGE 18-CONT/ROW 2-ROWS | 28480 | 1251-2026 |
| A1A12XA7 | 1251-2026 | 8 | | CONNECTOR-PC EDGE 18-CONT/ROW 2-ROWS | 28480 | 1251-2026 |
| A1A12XA8 | 1251-2026 | 8 | | CONNECTOR-PC EDGE 18-CONT/ROW 2-ROWS | 28480 | 1251-2026 |
| A1A12XA9 | 1251-0472 | 4 | 1 | CONNECTOR-PC EDGE 6-CONT/ROW 2-ROWS | 28480 | 1251-0472 |
| A1A13 | 08673-20107 | 5 | 1 | TERMINAL STRIP | 28480 | 08673-20107 |
| A1A13J1-A1A13J7 | 1250-1593 | 0 | 7 | ADAPTER-COAX STR M-SMB M-SMB | 28480 | 1250-1593 |
| A1A14 | 08673-67008 | 3 | 2 | 26GHZ AMPLIFIER ASSY (INCLUDES A1A14AR1) | 28480 | 08673-67008 |
| A1A14A1 | 08673-60135 | 3 | 1 | AMP BIAS BD ASSY (DOES NOT INCLUDE A1A14AR1) | 28480 | 08673-60135 |
| A1A14C1 | 0180-1745 | 4 | 2 | CAPACITOR-FXD 1.5UF+-10% 20VDC TA | 56289 | 150D155X9020A2 |
| A1A14C2 | 0160-3879 | 7 | | CAPACITOR-FXD .01UF +-20% 100VDC CER | 28480 | 0160-3879 |
| A1A14C3 | 0180-1745 | 4 | | CAPACITOR-FXD 1.5UF+-10% 20VDC TA | 56289 | 150D155X9020A2 |
| A1A14MP1 | 0362-0265 | 7 | 1 | CONNECTOR-SGL CONT SKT 1.14-MM-BSC-SZ | 28480 | 0362-0265 |
| A1A14MP2 | 1251-3172 | 7 | | CONNECTOR-SGL CONT SKT .03-IN-BSC-SZ RND | 28480 | 1251-3172 |
| A1A14MP3 | 0360-0535 | 0 | | TERMINAL TEST POINT PCB | 00000 | ORDER BY DESCRIPTION |

See introduction to this section for ordering information
*Indicates factory selected value
†Backdating information in Section VII



www.valuetronics.com

Table 6-3. Replaceable Parts

| Reference Designation | HP Part Number | C D | Qty | Description | Mfr Code | Mfr Part Number |
|---|---|---|---|---|---|---|
| A1A14R1 | 0698-7260 | 7 | | RESISTOR 10K 1% .05W F TC=0+-100 | 24546 | C3-1/8-TO-1002-F |
| A1A14R2 | 0811-1670 | 3 | 1 | RESISTOR 2.2 5% 2W PW TC=0+-400 | 75042 | BWH2-2R2-J |
| A1A14U1 | 1826-0527 | 9 | 1 | IC 337 V RGLTR TO-220 | 27014 | LM337T |
| A1AR1 | 08673-67008 | 3 | | 26 GHZ AMP (OPTION 8 ONLY) | 28480 | 08673-67008 |
| A1AT1 | 08673-60043 | 2 | 1 | PROGRAMMED ATTENUATOR- 90 DB | 28480 | 08673-60043 |
| A1AT1 | 08673-60096 | 5 | 1 | PROGRAMMED ATTENUATOR-90 DB (RESTORED 08673-60043) | 28480 | 08673-60096 |
| A1AT2 | 0960-0362 | 3 | 1 | ISOLATOR | 28480 | 0960-0362 |
| A1AT3 | 0955-0160 | 8 | 1 | DIODE SWITCH | 28480 | 0955-0160 |
| A1AT4 | 0955-0163 | 1 | 1 | COAXIAL ATTENUATOR | 28480 | 0955-0163 |
| A1AT5 | 0955-0192 | 6 | 1 | ISOLATOR-MICROWAVE FREQ. RANGE: 16.0 TO D STD & OPT 1 & 5 ONLY | 28480 | 0955-0192 |
| A1AT6 | 0960-0672 | 8 | 1 | ISOLATOR D STD & OPT 1 & 5 ONLY | 28480 | 0960-0672 |
| A1CP1 | 11720-60002 | 8 | 1 | BIAS TEE ASSEMBLY | 28480 | 11720-60002 |
| A1CR1 | 08673-60083 | 0 | 1 | CRYSTAL DETECTOR ASSEMBLY | 28480 | 08673-60083 |
| A1DC1 | 0955-0125 | 5 | 1 | DIRECTIONAL COUPLER, D ONLY | 28480 | 0955-0125 |
| | 0955-0101 | 7 | 1 | COUPLER-DIRECTIONAL 2.0 TO 18.6 GHZ C ONLY | 28480 | 0955-0101 |
| A1FL1 | 11720-60003 | 9 | 1 | HIGH PASS FILTER ASSEMBLY | 28480 | 11720-60003 |
| A1K1 | 08673-60107 | 9 | 2 | COAXIAL SWITCH | 28480 | 08673-60107 |
| A1K2 | 08673-60107 | 9 | | COAXIAL SWITCH, D ONLY | 28480 | 08673-60107 |
| A1MP1 | 0340-0614 | 4 | 1 | INSULATOR-XSTR POLYI HD-ANOZ | 28480 | 0340-0614 |
| A1MP2 | 0400-0018 | 0 | 1 | GROMMET-CHAN NCH .052-IN-THK-PNL | 28480 | 0400-0018 |
| A1MP3 | 0403-0194 | 9 | 4 | GUIDE-PC BD BE-CU .062-BD-THKNS 3.5-LG | 28480 | 0403-0194 |
| A1MP4 | 0520-0155 | 0 | 8 | SCREW-MACH 2-56 .125-IN-LG PAN-HD-POZI | 28480 | 0520-0155 |
| A1MP5 | 1200-0043 | 8 | 1 | INSULATOR-XSTR ALUMINUM | 28480 | 1200-0043 |
| A1MP6 | 2200-0129 | 2 | 1 | SCREW-MACH 4-40 2-IN-LG PAN-HD-POZI | 00000 | ORDER BY DESCRIPTION |
| A1MP7 | 1251-4459 | 5 | 5 | CLIP-CABLE PLUG RTNG-DUAL INLINE 14 CONT | 28480 | 1251-4459 |
| A1MP8 | 2190-0018 | 5 | 2 | WASHER-LK HLCL NO. 6 .141-IN-ID | 28480 | 2190-0018 |
| A1MP9 | 2190-0019 | 6 | 20 | WASHER-LK HLCL NO. 4 .115-IN-ID | 28480 | 2190-0019 |
| A1MP10 | 2190-0045 | 8 | | WASHER-LK HLCL NO. 2 .088-IN-ID | 28480 | 2190-0045 |
| A1MP11 | 2200-0091 | 7 | 2 | SCREW-MACH 4-40 .562-IN-LG PAN-HD-POZI | 00000 | ORDER BY DESCRIPTION |
| A1MP12 | 2200-0103 | 2 | | SCREW-MACH 4-40 .25-IN-LG PAN-HD-POZI | 28480 | 2200-0103 |
| A1MP13 | 2200-0111 | 2 | 3 | SCREW-MACH 4-40 .5-IN-LG PAN-HD-POZI | 00000 | ORDER BY DESCRIPTION |
| A1MP14 | 2200-0143 | 0 | 15 | SCREW-MACH 4-40 .375-IN-LG PAN-HD-POZI | 28480 | 2200-0143 |
| A1MP15 | 2200-0167 | 8 | 3 | SCREW-MACH 4-40 .375-IN-LG 82 DEG | 28480 | 2200-0167 |
| A1MP16 | 2200-0169 | 0 | 14 | SCREW-MACH 4-40 .5-IN-LG 82 DEG | 28480 | 2200-0169 |
| A1MP17 | 2260-0002 | 6 | 1 | NUT-HEX-DBL-CHAM 4-40-THD .062-IN-THK | 28480 | 2260-0002 |
| A1MP18 | 2360-0113 | 2 | 10 | SCREW-MACH 6-32 .25-IN-LG PAN-HD-POZI | 00000 | ORDER BY DESCRIPTION |
| A1MP19 | 2360-0180 | 3 | 2 | SCREW-MACH 6-32 .188-IN-LG 82 DEG | 00000 | ORDER BY DESCRIPTION |
| A1MP20 | 2360-0195 | 0 | 2 | SCREW-MACH 6-32 .312-IN-LG PAN-HD-POZI | 28480 | 2360-0195 |
| A1MP21 | 2360-0197 | 2 | 2 | SCREW-MACH 8-32 .375-IN-LG PAN-HD-POZI | 28480 | 2360-0197 |
| A1MP22 | 2360-0333 | 8 | 10 | SCREW-MACH 8-32 .25-IN-LG 100 DEG | 28480 | 2360-0333 |
| A1MP23 | 2420-0001 | 5 | 4 | NUT-HEX-W/LKWR 8-32-THD .109-IN-THK | 00000 | ORDER BY DESCRIPTION |
| A1MP24 | 3050-0010 | 2 | 6 | WASHER-FL MTLC NO. 6 .147-IN-ID | 28480 | 3050-0010 |
| A1MP25 | 08673-20115 | 5 | 2 | BUSHING, INSULATOR | 28480 | 08673-20115 |
| A1MP26 | 3050-0105 | 6 | 1 | WASHER-FL MTLC NO. 4 .125-IN-ID | 28480 | 3050-0105 |
| A1MP27 | 5040-0170 | 6 | 2 | BOARD SUPPORT | 28480 | 5040-0170 |
| A1MP28 | 08673-00026 | 5 | 1 | REAR SUPPORT | 28480 | 08673-00026 |
| A1MP29 | 08673-00027 | 6 | 1 | SPACER-MICROCIRCUIT | 28480 | 08673-00027 |
| A1MP30 | 08673-00050 | 5 | 1 | GUSSET-RF (LEFT) | 28480 | 08673-00050 |
| A1MP31 | 08673-00029 | 8 | 1 | GUSSET-RF (RIGHT) | 28480 | 08673-00029 |
| A1MP32 | 08673-00055 | 0 | 1 | SUPPORT-P.C. (FRONT) | 28480 | 08673-00055 |
| A1MP33 | 08673-00051 | 6 | 1 | CHASSIS | 28480 | 08673-00051 |
| A1MP34 | 08673-00032 | 3 | 1 | SUPPORT-P.C. (REAR) | 28480 | 08673-00032 |
| A1MP35 | 08673-00033 | 4 | 1 | SUPPORT-ISOLATOR | 28480 | 08673-00033 |
| A1MP36 | 08673-00034 | 5 | 2 | SHIELD-PULSE BOARD | 28480 | 08673-00034 |
| A1MP37 | 08673-00049 | 2 | 1 | SUPPORT-COUPLER D STD ONLY | 28480 | 08673-00049 |
| A1MP37 | 08673-00057 | 2 | 1 | SUPPORT-COUPLER C STD ONLY | 28480 | 08673-00057 |
| A1MP38 | 08673-20046 | 1 | 1 | SHIELD-ISOLATOR | 28480 | 08673-20046 |
| A1MP39 | 08673-20063 | 2 | 1 | BUSHING | 28480 | 08673-20063 |

See introduction to this section for ordering information
*Indicates factory selected value
†Backdating information in Section VII



www.valuetronics.com

A1

Table 6-3. Replaceable Parts

| Reference Designation | HP Part Number | C D | Qty | Description | Mfr Code | Mfr Part Number |
|---|---|---|---|---|---|---|
| A1MP40 | 2200-0105 | 4 | 2 | SCREW-MACH 4-40 .312-IN-LG PAN-HD-POZI | 00000 | ORDER BY DESCRIPTION |
| A1MP41 | 2200-0127 | 0 | 4 | SCREW-MACH 4-40 1.75-IN-LG PAN-HD-POZI | 00000 | ORDER BY DESCRIPTION |
| A1MP42 | 2200-0165 | 6 | 3 | SCREW-MACH 4-40 .25-IN-LG 82 DEG | 00000 | ORDER BY DESCRIPTION |
| A1MP43 | 08673-00047 | 0 | 1 | SHIELD, ATTENUATOR | 28480 | 08673-00047 |
| A1MP44 | 08673-20096 | 1 | 2 | SHIELD, POLYIRON | 28480 | 08673-20095 |
| A1MP45 | 0520-0128 | 7 | 3 | SCREW-MACH 2-56 .25-IN-LG PAN-HD-POZI | 00000 | ORDER BY DESCRIPTION |
| A1MP46 | 1251-4459 | 5 | | CLIP-CABLE PLUG RTNG-DUAL INLINE 14 CONT | 28480 | 1251-4459 |
| A1MP47 | 3050-0098 | 6 | 3 | WASHER-FL MTLC NO. 2 .094-IN-ID | 28480 | 3050-0098 |
| A1MP48 | 2200-0166 | 7 | 3 | SCREW-MACH 4-40 .312-IN-LG 82 DEG | 00000 | ORDER BY DESCRIPTION |
| A1MP49 | 08673-20098 | 3 | 3 | SPACER | 28480 | 08673-20098 |
| A1MP50 | 08673-20099 | 4 | 1 | SHIELD, POLYIRON, C & D STD ONLY | 28480 | 08673-20099 |
| A1MP51 | 08673-20023 | 4 | 2 | SPACER PWR-AMP D | 28480 | 08673-20023 |
| A1MP52 | 2200-0101 | 0 | 2 | SCREW-MACH 4-40 .188-IN-LG PAN-HD-POZI | 00000 | ORDER BY DESCRIPTION |
| A1MP53 | 2200-0116 | 6 | 1 | SCREW-MACH 4-40 .75-IN-LG PAN-HD-POZI C & D STD ONLY | 00000 | ORDER BY DESCRIPTION |
| A1MP54 | 08673-20023 | 4 | | SPACER | 28480 | 08673-20023 |
| A1MP55 | 86701-00048 | 0 | 2 | BRACKET C & D STD ONLY | 28480 | 86701-00048 |
| A1MP56 | 1400-0510 | 8 | 1 | CLAMP-CABLE .15-DIA .62-WD NYL C & D STD ONLY | 28480 | 1400-0510 |
| A1MP57 | 2200-0109 | 8 | 2 | SCREW-MACH 4-40 .438-IN-LG PAN-HD-POZI | 00000 | ORDER BY DESCRIPTION |
| A1MP58 | 08673-20093 | 8 | 1 | SPACER | 28480 | 08673-20093 |
| A1MP59 | 08673-20107 | 5 | | TERMINAL STRIP | 28480 | 08673-20107 |
| A1MP60 | 08673-20113 | 3 | 1 | SHIELD ATTENUATOR | 28480 | 08673-20113 |
| A1Q1 | 1853-0344 | 5 | 1 | TRANSISTOR PNP 2N5876 SI TO-3 PD=150W | 04713 | 2N5876 |
| A1R1 | 0811-3477 | 2 | 1 | RESISTOR 25 1% 25W PW TC=0+-2 | 28480 | 0811-3477 |
| A1W1 | 08673-20055 | 2 | 1 | CABLE ASSEMBLY RF OUTPUT C & D STANDARD | 28480 | 08673-20055 |
| A1W1 | 08673-20088 | 1 | 1 | CABLE ASSEMBLY RF OUTPUT OPTION 004 C&D | 28480 | 08673-20088 |
| A1W1 | 08673-20090 | 5 | 1 | CABLE ASSEMBLY RF OUTPUT OPTION 005, D | 28480 | 08673-20090 |
| A1W1 | 08673-20095 | 0 | 1 | CABLE ASSEMBLY RF OUTPUT OPTION 001, D | 28480 | 08673-20095 |
| A1W1 | 08673-20148 | 4 | 1 | CABLE ASSY DC1-FR PAN C OPT 001 ONLY | 28480 | 08673-20148 |
| A1W1 | 08673-20149 | 5 | 1 | CABLE ASSY DC1-REAR PAN C OPT 005 ONLY | 28480 | 08673-20149 |
| A1W2 | 08673-20128 | 0 | 1 | CABLE ASSEMBLY-CPLR OUTPUT C STD AND OPT 4, C ONLY | 28480 | 08673-20128 |
| A1W2 | 08673-20146 | 2 | 1 | CABLE ASSY DC1-ATT D STD AND OPT 4 D ONLY | 28480 | 08673-20146 |
| A1W3 | 08673-20039 | 2 | 1 | CABLE ASSEMBLY-YTM OUTPUT | 28480 | 08673-20039 |
| A1W4 | 08673-20050 | 7 | 1 | CABLE ASSEMBLY-POWER AMP INPUT | 28480 | 08673-20050 |
| A1W5 | 08672-20067 | 5 | 1 | CABLE ASSEMBLY-YTM INPUT | 28480 | 08672-20067 |
| A1W6 | 08672-60071 | 5 | 1 | CABLE, ASSY, 14 COND | 28480 | 08672-60071 |
| A1W7 | 08673-60046 | 5 | 1 | CABLE ASSEMBLY-PULSE MOD | 28480 | 08673-60046 |
| A1W8 | 08673-60049 | 8 | 1 | CABLE ASSEMBLY-YTM PULSE | 28480 | 08673-60049 |
| A1W9 | 08673-60048 | 7 | 1 | CABLE ASSEMBLY-BIAS TEE | 28480 | 08673-60048 |
| A1W10 | 08673-20051 | 8 | 1 | CABLE ASSEMBLY-POWER AMP OUTPUT | 28480 | 08673-20051 |
| A1W11 | 08673-20049 | 4 | 1 | CABLE ASSEMBLY-PREAMP OUTPUT | 28480 | 08673-20049 |
| A1W12 | 08673-60093 | 2 | 1 | CABLE ASSEMBLY-RIBBON 14-PIN | 28480 | 08673-60093 |
| A1W13 | 08673-60045 | 4 | 1 | CABLE ASSEMBLY-ALC OUTPUT | 28480 | 08673-60045 |
| A1W14 | 08673-20101 | 9 | 1 | CABLE ASSEMBLY-YTM OUTPUT | 28480 | 08673-20101 |
| A1W15 | 08673-20096 | 1 | | CABLE ASSEMBLY-K AMP IN D STD & OPT 1 & 5 ONLY | 28480 | 08673-20096 |
| A1W16 | 08673-20097 | 2 | 1 | CABLE ASSEMBLY-CIRCULATOR OUT D STD & OPT 1 & 5 ONLY | 28480 | 08673-20097 |
| A1W17 | 08673-20100 | 9 | 1 | CABLE ASSEMBLY-CPLR INPUT D ONLY | 28480 | 08673-20100 |
| A1W18 | 08673-20040 | 5 | 1 | CABLE ASSY K1-K2 D STD | 28480 | 08673-20040 |
| A1W19 | 08673-20105 | 3 | 1 | CABLE ASSY K1-DC1 C STD | 28480 | 08673-20105 |



See introduction to this section for ordering information
*Indicates factory selected value
†Backdating information in Section VII

www.valuetronics.com

A2

Table 6-3. Replaceable Parts

| Reference Designation | HP Part Number | C D | Qty | Description | Mfr Code | Mfr Part Number |
|---|---|---|---|---|---|---|
| A2A1 | 08673-60003 | 4 | 1 | PANEL DRIVER BOARD ASSEMBLY | 28480 | 08673-60003 |
| A2A1C1 | 0180-1746 | 5 | 7 | CAPACITOR-FXD 15UF+-10% 20VDC TA | 56289 | 150D156X9020B2 |
| A2A1C2 | 0160-4389 | 8 | 2 | CAPACITOR-FXD 100PF +-5PF 200VDC CER | 28480 | 0160-4389 |
| A2A1C3 | 0180-1746 | 5 | | CAPACITOR-FXD 15UF+-10% 20VDC TA | 56289 | 150D156X9020B2 |
| A2A1C4 | 0160-4389 | 8 | | CAPACITOR-FXD 100PF +-5PF 200VDC CER | 28480 | 0160-4389 |
| A2A1C5 | 0180-1746 | 5 | | CAPACITOR-FXD 15UF+-10% 20VDC TA | 56289 | 150D156X9020B2 |
| A2A1C6 | 0180-1746 | 5 | | CAPACITOR-FXD 15UF+-10% 20VDC TA | 56289 | 150D156X9020B2 |
| A2A1C7 | 0180-1746 | 5 | | CAPACITOR-FXD 15UF+-10% 20VDC TA | 56289 | 150D156X9020B2 |
| A2A1C8 | 0180-1746 | 5 | | CAPACITOR-FXD 15UF+-10% 20VDC TA | 56289 | 150D156X9020B2 |
| A2A1C9 | 0180-1746 | 5 | | CAPACITOR-FXD 15UF+-10% 20VDC TA | 56289 | 150D156X9020B2 |
| A2A1CR1 | 1901-0050 | 3 | 14 | DIODE-SWITCHING 80V 200MA 2NS DO-35 | 28480 | 1901-0050 |
| A2A1CR2 | 1901-0050 | 3 | | DIODE-SWITCHING 80V 200MA 2NS DO-35 | 28480 | 1901-0050 |
| A2A1CR3 | 1901-0050 | 3 | | DIODE-SWITCHING 80V 200MA 2NS DO-35 | 28480 | 1901-0050 |
| A2A1L1 | 9100-3922 | 4 | 7 | INDUCTOR-FIXED 120-1300 HZ | 28480 | 9100-3922 |
| A2A1MP1 | 1480-0073 | 6 | 11 | PIN-ROLL .062-IN-DIA .25-IN-LG BE-CU | 28480 | 1480-0073 |
| A2A1MP2 | 4040-0748 | 3 | 5 | EXTR-PC BD BLK POLYC .062-BD-THKNS | 28480 | 4040-0748 |
| A2A1MP3 | 4040-0749 | 4 | 1 | EXTR-PC BD BRN POLYC .062-BD-THKNS | 28480 | 4040-0749 |
| A2A1R1 | 0698-3132 | 4 | 29 | RESISTOR 261 1% .125W F TC=0+-100 | 24546 | C4-1/8-T0-2610-F |
| A2A1R2 | 0698-3132 | 4 | | RESISTOR 261 1% .125W F TC=0+-100 | 24546 | C4-1/8-T0-2610-F |
| A2A1R3 | 0698-3136 | 8 | 3 | RESISTOR 17.8K 1% .125W F TC=0+-100 | 24546 | C4-1/8-T0-1782-F |
| A2A1R4 | 0698-3132 | 4 | | RESISTOR 261 1% .125W F TC=0+-100 | 24546 | C4-1/8-T0-2610-F |
| A2A1R5 | 0698-3132 | 4 | | RESISTOR 261 1% .125W F TC=0+-100 | 24546 | C4-1/8-T0-2610-F |
| A2A1R6 | 0698-3132 | 4 | | RESISTOR 261 1% .125W F TC=0+-100 | 24546 | C4-1/8-T0-2610-F |
| A2A1R7 | 0698-3132 | 4 | | RESISTOR 261 1% .125W F TC=0+-100 | 24546 | C4-1/8-T0-2610-F |
| A2A1R8 | 0698-3132 | 4 | | RESISTOR 261 1% .125W F TC=0+-100 | 24546 | C4-1/8-T0-2610-F |
| A2A1R9 | 0698-3132 | 4 | | RESISTOR 261 1% .125W F TC=0+-100 | 24546 | C4-1/8-T0-2610-F |
| A2A1R10 | 0698-3132 | 4 | | RESISTOR 261 1% .125W F TC=0+-100 | 24546 | C4-1/8-T0-2610-F |
| A2A1R11 | 0698-3132 | 4 | | RESISTOR 261 1% .125W F TC=0+-100 | 24546 | C4-1/8-T0-2610-F |
| A2A1R12 | 0698-3132 | 4 | | RESISTOR 261 1% .125W F TC=0+-100 | 24546 | C4-1/8-T0-2610-F |
| A2A1R13 | 0698-3132 | 4 | | RESISTOR 261 1% .125W F TC=0+-100 | 24546 | C4-1/8-T0-2610-F |
| A2A1R14 | 0698-3132 | 4 | | RESISTOR 261 1% .125W F TC=0+-100 | 24546 | C4-1/8-T0-2610-F |
| A2A1R15 | 0698-3132 | 4 | | RESISTOR 261 1% .125W F TC=0+-100 | 24546 | C4-1/8-T0-2610-F |
| A2A1R16 | 0698-3132 | 4 | | RESISTOR 261 1% .125W F TC=0+-100 | 24546 | C4-1/8-T0-2610-F |
| A2A1R17 | 0698-3132 | 4 | | RESISTOR 261 1% .125W F TC=0+-100 | 24546 | C4-1/8-T0-2610-F |
| A2A1R18 | 0698-3132 | 4 | | RESISTOR 261 1% .125W F TC=0+-100 | 24546 | C4-1/8-T0-2610-F |
| A2A1R19 | 0698-3132 | 4 | | RESISTOR 261 1% .125W F TC=0+-100 | 24546 | C4-1/8-T0-2610-F |
| A2A1R20 | 0698-3132 | 4 | | RESISTOR 261 1% .125W F TC=0+-100 | 24546 | C4-1/8-T0-2610-F |
| A2A1R21 | 0698-3132 | 4 | | RESISTOR 261 1% .125W F TC=0+-100 | 24546 | C4-1/8-T0-2610-F |
| A2A1R22 | 0698-3132 | 4 | | RESISTOR 261 1% .125W F TC=0+-100 | 24546 | C4-1/8-T0-2610-F |
| A2A1R23 | 0698-3132 | 4 | | RESISTOR 261 1% .125W F TC=0+-100 | 24546 | C4-1/8-T0-2610-F |
| A2A1R24 | 0698-3132 | 4 | | RESISTOR 261 1% .125W F TC=0+-100 | 24546 | C4-1/8-T0-2610-F |
| A2A1R25 | 0698-3132 | 4 | | RESISTOR 261 1% .125W F TC=0+-100 | 24546 | C4-1/8-T0-2610-F |
| A2A1R26 | 0698-3438 | 3 | 2 | RESISTOR 147 1% .125W F TC=0+-100 | 24546 | C4-1/8-T0-147R-F |
| A2A1R27 | 0698-3438 | 3 | | RESISTOR 147 1% .125W F TC=0+-100 | 24546 | C4-1/8-T0-147R-F |
| A2A1R28 | 0698-3132 | 4 | | RESISTOR 261 1% .125W F TC=0+-100 | 24546 | C4-1/8-T0-2610-F |
| A2A1R29 | 0698-3132 | 4 | | RESISTOR 261 1% .125W F TC=0+-100 | 24546 | C4-1/8-T0-2610-F |
| A2A1R30 | 0698-3132 | 4 | | RESISTOR 261 1% .125W F TC=0+-100 | 24546 | C4-1/8-T0-2610-F |
| A2A1R31 | 0698-3132 | 4 | | RESISTOR 261 1% .125W F TC=0+-100 | 24546 | C4-1/8-T0-2610-F |
| A2A1R32 | 0698-3159 | 5 | 2 | RESISTOR 26.1K 1% .125W F TC=0+-100 | 24546 | C4-1/8-T0-2612-F |
| A2A1R33 | 0698-3136 | 8 | | RESISTOR 17.8K 1% .125W F TC=0+-100 | 24546 | C4-1/8-T0-1782-F |
| A2A1R34 | 0698-3159 | 5 | | RESISTOR 26.1K 1% .125W F TC=0+-100 | 24546 | C4-1/8-T0-2612-F |
| A2A1R35 | 0698-3136 | 8 | | RESISTOR 17.8K 1% .125W F TC=0+-100 | 24546 | C4-1/8-T0-1782-F |
| A2A1R36 | 0698-3132 | 4 | | RESISTOR 261 1% .125W F TC=0+-100 | 24546 | C4-1/8-T0-2610-F |
| A2A1U1 | 1820-1202 | 7 | 4 | IC GATE TTL LS NAND TPL 3-INP | 01295 | SN74LS10N |
| A2A1U2 | 1820-1423 | 4 | 2 | IC MV TTL LS MONOSTBL RETRIG DUAL | 01295 | SN74LS123N |
| A2A1U3 | 1820-1201 | 6 | 5 | IC GATE TTL LS AND QUAD 2-INP | 01295 | SN74LS08N |
| A2A1U4 | 1820-1423 | 4 | | IC MV TTL LS MONOSTBL RETRIG DUAL | 01295 | SN74LS123N |
| A2A1U5 | 1820-1858 | 9 | 14 | IC FF TTL LS D TYPE OCTL | 01295 | SN74LS377N |

See introduction to this section for ordering information
*Indicates factory selected value
†Backdating information in Section VII



www.valuetronics.com

A2

Table 6-3. Replaceable Parts

| Reference Designation | HP Part Number | C D | Qty | Description | Mfr Code | Mfr Part Number |
|---|---|---|---|---|---|---|
| A2A1U6 | 1820-1858 | 9 | | IC FF TTL LS D-TYPE OCTL | 01295 | SN74LS377N |
| A2A1U7 | 1820-1858 | 9 | | IC FF TTL LS D-TYPE OCTL | 01295 | SN74LS377N |
| A2A1U8 | 1820-1858 | 9 | | IC FF TTL LS D-TYPE OCTL | 01295 | SN74LS377N |
| A2A1U9 | 1820-1858 | 9 | | IC FF TTL LS D-TYPE OCTL | 01295 | SN74LS377N |
| A2A1U10 | 1820-1858 | 9 | | IC FF TTL LS D-TYPE OCTL | 01295 | SN74LS377N |
| A2A1U11 | 1820-1858 | 9 | | IC FF TTL LS D-TYPE OCTL | 01295 | SN74LS377N |
| A2A1U12 | 1820-1740 | 8 | 2 | IC DRVR TTL DSPL DRVR | 27014 | DS8863N |
| A2A1U13 | 1820-1740 | 8 | | IC DRVR TTL DSPL DRVR | 27014 | DS8863N |
| A2A1U14 | 1820-1216 | 3 | 8 | IC DCDR TTL LS 3-TO-8-LINE 3-INP | 01295 | SN74LS138N |
| A2A1U15 | 1820-1216 | 3 | | IC DCDR TTL LS 3-TO-8-LINE 3-INP | 01295 | SN74LS138N |
| A2A2 | 08673-60004 | 5 | 1 | KEY CODE BOARD ASSEMBLY | 28480 | 08673-60004 |
| A2A2C1 | 0180-0197 | 8 | 15 | CAPACITOR-FXD 2.2UF+-10% 20VDC TA | 56289 | 150D225X9020A2 |
| A2A2C2 | 0180-0197 | 8 | | CAPACITOR-FXD 2.2UF+-10% 20VDC TA | 56289 | 150D225X9020A2 |
| A2A2C3 | 0180-0197 | 8 | | CAPACITOR-FXD 2.2UF+-10% 20VDC TA | 56289 | 150D225X9020A2 |
| A2A2C4 | 0180-0197 | 8 | | CAPACITOR-FXD 2.2UF+-10% 20VDC TA | 56289 | 150D225X9020A2 |
| A2A2C5 | 0160-3456 | 6 | | CAPACITOR-FXD 1000PF +-10% 1KVDC CER | 28480 | 0160-3456 |
| A2A2C6 | 0160-3878 | 6 | 1 | CAPACITOR-FXD 1000PF +-20% 100VDC CER | 28480 | 0160-3878 |
| A2A2C7 | 0160-0576 | 5 | 2 | CAPACITOR-FXD .1UF +-20% 50VDC CER | 28480 | 0160-0576 |
| A2A2CR1 | 1901-0040 | 1 | 3 | DIODE-SWITCHING 30V 50MA 2NS DO-35 | 28480 | 1901-0040 |
| A2A2CR2 | 1901-0040 | 1 | | DIODE-SWITCHING 30V 50MA 2NS DO-35 | 28480 | 1901-0040 |
| A2A2DS1 | 1990-0678 | 8 | 7 | LED-LAMP LUM-INT=800UCD IF=30MA-MAX | 28480 | 1990-0678 |
| A2A2DS2 | 1990-0678 | 8 | | LED-LAMP LUM-INT=800UCD IF=30MA-MAX | 28480 | 1990-0678 |
| A2A2DS3 | 1990-0678 | 8 | | LED-LAMP LUM-INT=800UCD IF=30MA-MAX | 28480 | 1990-0678 |
| A2A2DS4 | 1990-0678 | 8 | | LED-LAMP LUM-INT=800UCD IF=30MA-MAX | 28480 | 1990-0678 |
| A2A2DS5 | 1990-0678 | 8 | | LED-LAMP LUM-INT=800UCD IF=30MA-MAX | 28480 | 1990-0678 |
| A2A2DS6 | 1990-0678 | 8 | | LED-LAMP LUM-INT=800UCD IF=30MA-MAX | 28480 | 1990-0678 |
| A2A2DS7 | 1990-0678 | 8 | | LED-LAMP LUM-INT=800UCD IF=30MA-MAX | 28480 | 1990-0678 |
| A2A2L1 | 9100-3922 | 4 | | INDUCTOR-FIXED 120-1300 HZ | 28480 | 9100-3922 |
| A2A2MP1 | 1480-0073 | 6 | | PIN-ROLL .062-IN-DIA .25-IN-LG BE-CU | 28480 | 1480-0073 |
| A2A2MP2 | 4040-0748 | 3 | | EXTR-PC BD BLK POLYC .062-BD-THKNS | 28480 | 4040-0748 |
| A2A2MP3 | 4040-0750 | 7 | 1 | EXTR-PC BD RED POLYC .062-BD-THKNS | 28480 | 4040-0750 |
| A2A2R1 | 1810-0280 | 8 | 7 | NETWORK-RES 10-SIP10.0K OHM X 9 | 01121 | 210A103 |
| A2A2R2 | 1810-0280 | 8 | | NETWORK-RES 10-SIP10.0K OHM X 9 | 01121 | 210A103 |
| A2A2R3 | 1810-0280 | 8 | | NETWORK-RES 10-SIP10.0K OHM X 9 | 01121 | 210A103 |
| A2A2R4 | 0757-0442 | 9 | 17 | RESISTOR 10K 1% .125W F TC=0+-100 | 24546 | C4-1/8-TO-1002-F |
| A2A2R5 | 0757-0442 | 9 | | RESISTOR 10K 1% .125W F TC=0+-100 | 24546 | C4-1/8-TO-1002-F |
| A2A2R6 | 0757-0401 | 0 | 8 | RESISTOR 100 1% .125W F TC=0+-100 | 24546 | C4-1/8-TO-101-F |
| A2A2R7 | 0757-0442 | 9 | | RESISTOR 10K 1% .125W F TC=0+-100 | 24546 | C4-1/8-TO-1002-F |
| A2A2R8 | 1810-0339 | 8 | 1 | NETWORK-RES 8-SIP270.0 OHM X 7 | 01121 | 208A271 |
| A2A2S1 | 3101-2170 | 8 | 1 | SWITCH-PB SPDT MOM | 28480 | 3101-2170 |
| A2A2U1 | 1820-1201 | 6 | | IC GATE TTL LS AND QUAD 2-INP | 01295 | SN74LS08N |
| A2A2U2 | 1820-1422 | 3 | 4 | IC MV TTL LS MONOSTBL RETRIG | 01295 | SN74LS122N |
| A2A2U3 | 1820-1199 | 1 | 6 | IC INV TTL LS HEX 1-INP | 01295 | SN74LS04N |
| A2A2U4 | 1820-1199 | 1 | | IC INV TTL LS HEX 1-INP | 01295 | SN74LS04N |
| A2A2U5 | 1820-1201 | 6 | | IC GATE TTL LS AND QUAD 2-INP | 01295 | SN74LS08N |
| A2A2U6 | 1820-1195 | 7 | 2 | IC FF TTL LS D-TYPE POS-EDGE-TRIG COM | 01295 | SN74LS175N |
| A2A2U7 | 1820-1112 | 8 | 5 | IC FF TTL LS D-TYPE POS-EDGE-TRIG | 01295 | SN74LS74AN |
| A2A2U8 | 1820-1197 | 9 | 10 | IC GATE TTL LS NAND QUAD 2-INP | 01295 | SN74LS00N |
| A2A2U9 | 1820-1112 | 8 | | IC FF TTL LS D-TYPE POS-EDGE-TRIG | 01295 | SN74LS74AN |
| A2A2U10 | 1820-1197 | 9 | | IC GATE TTL LS NAND QUAD 2-INP | 01295 | SN74LS00N |
| A2A2U11 | 1820-1202 | 7 | | IC GATE TTL LS NAND TPL 3-INP | 01295 | SN74LS10N |
| A2A2U12 | 1820-1851 | 2 | 4 | IC ENCDR TTL LS | 01295 | SN74LS148N |
| A2A2U13 | 1820-1851 | 2 | | IC ENCDR TTL LS | 01295 | SN74LS148N |
| A2A2U14 | 1820-1851 | 2 | | IC ENCDR TTL LS | 01295 | SN74LS148N |
| A2A2W1 | 8159-0005 | 0 | 1 | RESISTOR-ZERO OHMS 22 AWG LEAD DIA | 28480 | 8159-0005 |
| A2A3 | 08672-60143 | 2 | 1 | VCO ASSEMBLY- 160-240 MHZ | 28480 | 08672-60143 |
| A2A3C1 | 0160-3456 | 6 | | CAPACITOR-FXD 1000PF +-10% 1KVDC CER | 28480 | 0160-3456 |
| A2A3C2 | 0160-0166 | 9 | 5 | CAPACITOR-FXD .068UF +-10% 200VDC POLYE | 28480 | 0160-0166 |
| A2A3C3 | 0160-3879 | 7 | 4 | CAPACITOR-FXD .01UF +-20% 100VDC CER | 28480 | 0160-3879 |
| A2A3C4 | 0180-0116 | 1 | 13 | CAPACITOR-FXD 6.8UF+-10% 35VDC TA | 56289 | 150D685X9035B2 |
| A2A3C5 | 0160-3879 | 7 | | CAPACITOR-FXD .01UF +-20% 100VDC CER | 28480 | 0160-3879 |

See introduction to this section for ordering information
*Indicates factory selected value
†Backdating information in Section VII



www.valuetronics.com

A2

Table 6-3. Replaceable Parts

| Reference Designation | HP Part Number | CD | Qty | Description | Mfr Code | Mfr Part Number |
|---|---|---|---|---|---|---|
| A2A3C6 | 0160-2259 | 5 | 1 | CAPACITOR-FXD 12PF +-5% 500VDC CER 0+-30 | 28480 | 0160-2259 |
| A2A3C7 | 0160-0301 | 4 | 2 | CAPACITOR-FXD .012UF +-10% 200VDC POLYE | 28480 | 0160-0301 |
| A2A3C8 | 0160-0166 | 9 | | CAPACITOR-FXD .068UF +-10% 200VDC POLYE | 28480 | 0160-0166 |
| A2A3C9 | 0160-3456 | 6 | | CAPACITOR-FXD 1000PF +-10% 1KVDC CER | 28480 | 0160-3456 |
| A2A3C10 | 0160-3456 | 6 | | CAPACITOR-FXD 1000PF +-10% 1KVDC CER | 28480 | 0160-3456 |
| A2A3C11 | 0160-0301 | 4 | | CAPACITOR-FXD .012UF +-10% 200VDC POLYE | 28480 | 0160-0301 |
| A2A3C12 | 0160-3456 | 6 | 18 | CAPACITOR-FXD 1000PF +-10% 1KVDC CER | 28480 | 0160-3456 |
| A2A3C13 | 0180-2211 | 1 | 1 | CAPACITOR-FXD 5UF+50-10% 150VDC AL | 56289 | 30D505F150CC2 |
| A2A3C14 | 0180-2214 | 4 | 1 | CAPACITOR-FXD 90UF+75-10% 16VDC AL | 56289 | 30D906G016CC2 |
| A2A3C15 | 0160-0166 | 9 | | CAPACITOR-FXD .068UF +-10% 200VDC POLYE | 28480 | 0160-0166 |
| A2A3C16 | 0160-3456 | 6 | | CAPACITOR-FXD 1000PF +-10% 1KVDC CER | 28480 | 0160-3456 |
| A2A3C17 | 0160-3456 | 6 | | CAPACITOR-FXD 1000PF +-10% 1KVDC CER | 28480 | 0160-3456 |
| A2A3C18 | 0160-3466 | 8 | 4 | CAPACITOR-FXD 100PF +-10% 1KVDC CER | 28480 | 0160-3466 |
| A2A3C19 | 0160-3456 | 6 | | CAPACITOR-FXD 1000PF +-10% 1KVDC CER | 28480 | 0160-3456 |
| A2A3C20 | 0160-3456 | 6 | | CAPACITOR-FXD 1000PF +-10% 1KVDC CER | 28480 | 0160-3456 |
| A2A3C21 | 0160-3456 | 6 | | CAPACITOR-FXD 1000PF +-10% 1KVDC CER | 28480 | 0160-3456 |
| A2A3C22 | 0160-3456 | 6 | | CAPACITOR-FXD 1000PF +-10% 1KVDC CER | 28480 | 0160-3456 |
| A2A3C23 | 0160-3456 | 6 | | CAPACITOR-FXD 1000PF +-10% 1KVDC CER | 28480 | 0160-3456 |
| A2A3C24 | 0160-3456 | 6 | | CAPACITOR-FXD 1000PF +-10% 1KVDC CER | 28480 | 0160-3456 |
| A2A3C25 | 0160-3456 | 6 | | CAPACITOR-FXD 1000PF +-10% 1KVDC CER | 28480 | 0160-3456 |
| A2A3C26 | 0160-3456 | 6 | | CAPACITOR-FXD 1000PF +-10% 1KVDC CER | 28480 | 0160-3456 |
| A2A3C27 | 0160-2240 | 4 | 1 | CAPACITOR-FXD 2PF +-.25PF 500VDC CER | 28480 | 0160-2240 |
| A2A3C28 | 0160-2262 | 0 | 2 | CAPACITOR-FXD 16PF +-5% 500VDC CER 0+-30 | 28480 | 0160-2262 |
| A2A3C29 | 0160-2262 | 0 | | CAPACITOR-FXD 16PF +-5% 500VDC CER 0+-30 | 28480 | 0160-2262 |
| A2A3C30 | 0160-3456 | 6 | | CAPACITOR-FXD 1000PF +-10% 1KVDC CER | 28480 | 0160-3456 |
| A2A3C31 | 0160-3456 | 6 | | CAPACITOR-FXD 1000PF +-10% 1KVDC CER | 28480 | 0160-3456 |
| A2A3C32 | 0140-0195 | 2 | 2 | CAPACITOR-FXD 130PF +-5% 300VDC MICA | 72136 | DM15F131J0300WV1CR |
| A2A3C33 | 0140-0195 | 2 | | CAPACITOR-FXD 130PF +-5% 300VDC MICA | 72136 | DM15F131J0300WV1CR |
| A2A3CR1 | 0122-0085 | 1 | 4 | DIODE-VVC 2.2PF 7% C3/C25-MIN=4.5 | 28480 | 0122-0085 |
| A2A3CR2 | 0122-0085 | 1 | | DIODE-VVC 2.2PF 7% C3/C25-MIN=4.5 | 28480 | 0122-0085 |
| A2A3CR3 | 0122-0085 | 1 | | DIODE-VVC 2.2PF 7% C3/C25-MIN=4.5 | 28480 | 0122-0085 |
| A2A3CR4 | 0122-0085 | 1 | | DIODE-VVC 2.2PF 7% C3/C25-MIN=4.5 | 28480 | 0122-0085 |
| A2A3J1 | 1250-0544 | 9 | 3 | CONNECTOR-RF SM-SNP M SGL-HOLE-FR 50-OHM | 28480 | 1250-0544 |
| A2A3J2 | 1250-0544 | 9 | | CONNECTOR-RF SM-SNP M SGL-HOLE-FR 50-OHM | 28480 | 1250-0544 |
| A2A3L1 | 9140-0180 | 4 | 1 | INDUCTOR RF-CH-MLD 2.7UH 10% | 28480 | 9140-0180 |
| A2A3L2 | 9100-2583 | 1 | 2 | INDUCTOR RF-CH-MLD 6.8MH 10% | 28480 | 9100-2583 |
| A2A3L3 | 9100-2583 | 1 | | INDUCTOR RF-CH-MLD 6.8MH 10% | 28480 | 9100-2583 |
| A2A3L4 | 9100-2249 | 6 | 1 | INDUCTOR RF-CH-MLD 150NH 10% .105DX.26LG | 28480 | 9100-2249 |
| A2A3L5 | 9100-2891 | 4 | 1 | INDUCTOR RF-CH-MLD 50NH 10% .105DX.26LG | 28480 | 9100-2891 |
| A2A3L6 | 9100-2248 | 5 | 2 | INDUCTOR RF-CH-MLD 120NH 10% .105DX.26LG | 28480 | 9100-2248 |
| A2A3L7 | 9100-2254 | 3 | 1 | INDUCTOR RF-CH-MLD 390NH 10% .105DX.26LG | 28480 | 9100-2254 |
| A2A3L8 | 9100-2248 | 5 | | INDUCTOR RF-CH-MLD 120NH 10% .105DX.26LG | 28480 | 9100-2248 |
| A2A3MP1 | 2190-0016 | 3 | 20 | WASHER-LK INTL T 3/8 IN .377-IN-ID | 28480 | 2190-0016 |
| A2A3MP2 | 2200-0101 | 0 | 10 | SCREW-MACH 4-40 .188-IN-LG PAN-HD-POZI | 00000 | ORDER BY DESCRIPTION |
| A2A3MP3 | 4330-0145 | 9 | 1 | INSULATOR-BEAD GLASS | 28480 | 4330-0145 |
| A2A3MP4 | 08672-20135 | 8 | 1 | COVER, VCO BD | 28480 | 08672-20135 |
| A2A3Q1 | 1855-0392 | 7 | 1 | TRANSISTOR J-FET N-CHAN D-MODE TO-72 SI | 28480 | 1855-0392 |
| A2A3Q2 | 1854-0345 | 8 | 3 | TRANSISTOR NPN 2N5179 SI TO-72 PD=200MW | 04713 | 2N5179 |
| A2A3Q3 | 1854-0345 | 8 | | TRANSISTOR NPN 2N5179 SI TO-72 PD=200MW | 04713 | 2N5179 |
| A2A3Q4 | 1854-0345 | 8 | | TRANSISTOR NPN 2N5179 SI TO-72 PD=200MW | 04713 | 2N5179 |
| A2A3Q5 | 1853-0020 | 4 | 1 | TRANSISTOR PNP SI PD=300MW FT=150MHZ | 28480 | 1853-0020 |
| A2A3Q6 | 1853-0451 | 5 | 1 | TRANSISTOR PNP 2N3799 SI TO-18 PD=360MW | 01295 | 2N3799 |
| A2A3R1 | 0757-0199 | 3 | 4 | RESISTOR 21.5K 1% .125W F TC=0+-100 | 24546 | C4-1/8-T0-2152-F |
| A2A3R2 | 0757-0442 | 9 | | RESISTOR 10K 1% .125W F TC=0+-100 | 24546 | C4-1/8-T0-1002-F |
| A2A3R3 | 0698-3156 | 2 | 1 | RESISTOR 14.7K 1% .125W F TC=0+-100 | 24546 | C4-1/8-T0-1472-F |
| A2A3R4 | 0757-0834 | 3 | 1 | RESISTOR 5.62K 1% .5W F TC=0+-100 | 28480 | 0757-0834 |
| A2A3R5 | 0757-0279 | 0 | 17 | RESISTOR 3.16K 1% .125W F TC=0+-100 | 24546 | C4-1/8-T0-3161-F |
| A2A3R6 | 0757-0280 | 3 | 23 | RESISTOR 1K 1% .125W F TC=0+-100 | 24546 | C4-1/8-T0-1001-F |
| A2A3R7 | 0757-0279 | 0 | | RESISTOR 3.16K 1% .125W F TC=0+-100 | 24546 | C4-1/8-T0-3161-F |
| A2A3R8 | 0757-0278 | 9 | 4 | RESISTOR 1.78K 1% .125W F TC=0+-100 | 24546 | C4-1/8-T0-1781-F |
| A2A3R9 | 0757-0346 | 2 | 4 | RESISTOR 10 1% .125W F TC=0+-100 | 24546 | C4-1/8-T0-10R0-F |
| A2A3R10 | 0757-0280 | 3 | | RESISTOR 1K 1% .125W F TC=0+-100 | 24546 | C4-1/8-T0-1001-F |

See introduction to this section for ordering information
*Indicates factory selected value
†Backdating information in Section VII



www.valuetronics.com

A2

Table 6-3. Replaceable Parts

| Reference Designation | HP Part Number | C D | Qty | Description | Mfr Code | Mfr Part Number |
|---|---|---|---|---|---|---|
| A2A3R11 | 0698-3444 | 1 | 8 | RESISTOR 316 1% .125W F TC=0+-100 | 24546 | C4-1/8-T0-316R-F |
| A2A3R12 | 0698-3444 | 1 | | RESISTOR 316 1% .125W F TC=0+-100 | 24546 | C4-1/8-T0-316R-F |
| A2A3R13 | 0757-0346 | 2 | | RESISTOR 10 1% .125W F TC=0+-100 | 24546 | C4-1/8-T0-10R0-F |
| A2A3R14 | 0757-0180 | 2 | 1 | RESISTOR 31.6 1% .125W F TC=0+-100 | 28480 | 0757-0180 |
| A2A3R15 | 0698-3444 | 1 | | RESISTOR 316 1% .125W F TC=0+-100 | 24546 | C4-1/8-T0-316R-F |
| A2A3R16 | 0757-0278 | 9 | | RESISTOR 1.78K 1% .125W F TC=0+-100 | 24546 | C4-1/8-T0-1781-F |
| A2A3R17 | 0757-0279 | 0 | | RESISTOR 3.16K 1% .125W F TC=0+-100 | 24546 | C4-1/8-T0-3161-F |
| A2A3R18 | 0698-3440 | 7 | 2 | RESISTOR 196 1% .125W F TC=0+-100 | 24546 | C4-1/8-T0-196R-F |
| A2A3R19 | 0757-0428 | 1 | 1 | RESISTOR 1.62K 1% .125W F TC=0+-100 | 24546 | C4-1/8-T0-1621-F |
| A2A3R20 | 0698-3160 | 8 | 6 | RESISTOR 31.6K 1% .125W F TC=0+-100 | 24546 | C4-1/8-T0-3162-F |
| A2A3R21 | 0698-3452 | 1 | 1 | RESISTOR 147K 1% .125W F TC=0+-100 | 24546 | C4-1/8-T0-1473-F |
| A2A3R22 | 0757-0123 | 3 | 1 | RESISTOR 34.8K 1% .125W F TC=0+-100 | 28480 | 0757-0123 |
| A2A3R23 | 0757-0416 | 7 | 4 | RESISTOR 511 1% .125W F TC=0+-100 | 24546 | C4-1/8-T0-511R-F |
| A2A3R24 | 0698-3440 | 7 | | RESISTOR 196 1% .125W F TC=0+-100 | 24546 | C4-1/8-T0-196R-F |
| A2A3R25 | 0698-3444 | 1 | | RESISTOR 316 1% .125W F TC=0+-100 | 24546 | C4-1/8-T0-316R-F |
| A2A3R26 | 0757-0346 | 2 | | RESISTOR 10 1% .125W F TC=0+-100 | 24546 | C4-1/8-T0-10R0-F |
| A2A3R27 | 0757-0278 | 9 | | RESISTOR 1.78K 1% .125W F TC=0+-100 | 24546 | C4-1/8-T0-1781-F |
| A2A3R28 | 0757-0418 | 9 | 4 | RESISTOR 619 1% .125W F TC=0+-100 | 24546 | C4-1/8-T0-619R-F |
| A2A3R29 | 0757-0279 | 0 | | RESISTOR 3.16K 1% .125W F TC=0+-100 | 24546 | C4-1/8-T0-3161-F |
| A2A3R30 | 0757-0418 | 9 | | RESISTOR 619 1% .125W F TC=0+-100 | 24546 | C4-1/8-T0-619R-F |
| A2A3R31 | 0698-0083 | 8 | 7 | RESISTOR 1.96K 1% .125W F TC=0+-100 | 24546 | C4-1/8-T0-1961-F |
| A2A3R32 | 0698-0083 | 8 | | RESISTOR 1.96K 1% .125W F TC=0+-100 | 24546 | C4-1/8-T0-1961-F |
| A2A3R33 | 0698-3444 | 1 | | RESISTOR 316 1% .125W F TC=0+-100 | 24546 | C4-1/8-T0-316R-F |
| A2A3R34 | 0757-0401 | 0 | | RESISTOR 100 1% .125W F TC=0+-100 | 24546 | C4-1/8-T0-101-F |
| A2A3S1 | 3101-1524 | 4 | 1 | SWITCH-SL DP3T SUBMIN .5A 125VAC/DC PC | 28480 | 3101-1524 |
| A2A3T1 | 08672-80003 | 5 | 1 | COIL-INDUCTOR | 28480 | 08672-80003 |
| A2A3U1 | 1820-1225 | 4 | 1 | IC FF ECL D-M/S DUAL | 04713 | MC10231P |
| A2A3U2 | 1820-0794 | 0 | 1 | IC FF ECL D-M/S | 04713 | MC1670L |
| A2A4 | 08672-60144 | 3 | 1 | PHASE DETECTOR ASSEMBLY- 20/30 | 28480 | 08672-60144 |
| A2A4C1 | 0180-0116 | 1 | | CAPACITOR-FXD 6.8UF+-10% 35VDC TA | 56289 | 150D685X9035B2 |
| A2A4C2 | 0160-0162 | 5 | 2 | CAPACITOR-FXD .022UF +-10% 200VDC POLYE | 28480 | 0160-0162 |
| A2A4C3 | 0180-0197 | 8 | | CAPACITOR-FXD 2.2UF+-10% 20VDC TA | 56289 | 150D225X9020A2 |
| A2A4C4 | 0180-0141 | 2 | 1 | CAPACITOR-FXD 50UF+75-10% 50VDC AL | 56289 | 30D506G050DD2 |
| A2A4C5 | 0160-3459 | 9 | 4 | CAPACITOR-FXD .02UF +-20% 100VDC CER | 28480 | 0160-3459 |
| A2A4C6 | 0180-0197 | 8 | | CAPACITOR-FXD 2.2UF+-10% 20VDC TA | 56289 | 150D225X9020A2 |
| A2A4C7 | 0160-0161 | 4 | 2 | CAPACITOR-FXD .01UF +-10% 200VDC POLYE | 28480 | 0160-0161 |
| A2A4C8 | 0160-0161 | 4 | | CAPACITOR-FXD .01UF +-10% 200VDC POLYE | 28480 | 0160-0161 |
| A2A4C9 | 0160-2290 | 4 | 2 | CAPACITOR-FXD .15UF +-10% 80VDC POLYE | 28480 | 0160-2290 |
| A2A4C10 | 0160-2205 | 1 | 1 | CAPACITOR-FXD 120PF +-5% 300VDC MICA | 28480 | 0160-2205 |
| A2A4C11 | 0160-3459 | 9 | | CAPACITOR-FXD .02UF +-20% 100VDC CER | 28480 | 0160-3459 |
| A2A4C12 | 0160-2290 | 4 | | CAPACITOR-FXD .15UF +-10% 80VDC POLYE | 28480 | 0160-2290 |
| A2A4C13 | 0160-2207 | 3 | 1 | CAPACITOR-FXD 300PF +-5% 300VDC MICA | 28480 | 0160-2207 |
| A2A4C14 | 0160-3459 | 9 | | CAPACITOR-FXD .02UF +-20% 100VDC CER | 28480 | 0160-3459 |
| A2A4C15 | 0160-3456 | 6 | | CAPACITOR-FXD 1000PF +-10% 1KVDC CER | 28480 | 0160-3456 |
| A2A4C16 | 0160-2055 | 9 | 15 | CAPACITOR-FXD .01UF +80-20% 100VDC CER | 28480 | 0160-2055 |
| A2A4C17 | 0160-3459 | 9 | | CAPACITOR-FXD .02UF +-20% 100VDC CER | 28480 | 0160-3459 |
| A2A4C18 | 0170-0040 | 9 | 2 | CAPACITOR-FXD .047UF +-10% 200VDC POLYE | 56289 | 292P47392 |
| A2A4C19 | 0160-0166 | 9 | | CAPACITOR-FXD .068UF +-10% 200VDC POLYE | 28480 | 0160-0166 |
| A2A4C20 | 0160-3661 | 5 | 2 | CAPACITOR-FXD .1UF +-5% 50VDC MET-POLYC | 28480 | 0160-3661 |
| A2A4C21 | 0160-0166 | 9 | | CAPACITOR-FXD .068UF +-10% 200VDC POLYE | 28480 | 0160-0166 |
| A2A4C22 | 0160-3661 | 5 | | CAPACITOR-FXD .1UF +-5% 50VDC MET-POLYC | 28480 | 0160-3661 |
| A2A4CR1 | 1901-0535 | 8 | 4 | DIODE-SM SIG SCHOTTKY | 28480 | 1901-0535 |
| A2A4CR2 | 1901-0535 | 8 | | DIODE-SM SIG SCHOTTKY | 28480 | 1901-0535 |
| A2A4CR3 | 1901-0535 | 8 | | DIODE-SM SIG SCHOTTKY | 28480 | 1901-0535 |
| A2A4CR4 | 1901-0535 | 8 | | DIODE-SM SIG SCHOTTKY | 28480 | 1901-0535 |
| A2A4L1 | 9100-1629 | 4 | 2 | INDUCTOR RF-CH-MLD 47UH 5% .166DX.385LG | 28480 | 9100-1629 |
| A2A4L2 | 9100-1629 | 4 | | INDUCTOR RF-CH-MLD 47UH 5% .166DX.385LG | 28480 | 9100-1629 |
| A2A4L3 | 08672-80002 | 4 | 2 | INDUCTOR- 3.8 MH | 28480 | 08672-80002 |
| A2A4L4 | 08672-80002 | 4 | | INDUCTOR- 3.8 MH | 28480 | 08672-80002 |
| A2A4MP1 | 1205-0250 | 9 | 3 | THERMAL LINK SGL TO-5/TO-39-CS | 28480 | 1205-0250 |
| A2A4MP2 | 08672-20136 | 9 | 1 | COVER-PHASE DETECTOR | 28480 | 08672-20136 |
| A2A4MP3 | 1200-0081 | 4 | 2 | INSULATOR-FLG-BSHG NYLON | 28480 | 1200-0081 |
| A2A4MP4 | 2200-0101 | 0 | | SCREW-MACH 4-40 .188-IN-LG PAN-HD-POZI | 00000 | ORDER BY DESCRIPTION |
| A2A4MP5 | 2200-0103 | 2 | 19 | SCREW-MACH 4-40 .25-IN-LG PAN-HD-POZI | 28480 | 2200-0103 |

See introduction to this section for ordering information
*Indicates factory selected value
†Backdating information in Section VII



www.valuetronics.com

A2

Table 6-3. Replaceable Parts

| Reference Designation | HP Part Number | C D | Qty | Description | Mfr Code | Mfr Part Number |
|---|---|---|---|---|---|---|
| A2A4Q1 | 1854-0712 | 3 | 1 | TRANSISTOR-DUAL NPN PD=1.8W | 28480 | 1854-0712 |
| A2A4Q2 | 1854-0071 | 7 | 3 | TRANSISTOR NPN SI PD=300MW FT=200MHZ | 28480 | 1854-0071 |
| A2A4R1 | 0757-0280 | 3 | | RESISTOR 1K 1% .125W F TC=0+-100 | 24546 | C4-1/8-T0-1001-F |
| A2A4R2 | 0698-3629 | 4 | 1 | RESISTOR 270 5% 2W MO TC=0+-200 | 28480 | 0698-3629 |
| A2A4R3 | 0757-1094 | 9 | 1 | RESISTOR 1.47K 1% .125W F TC=0+-100 | 24546 | C4-1/8-T0-1471-F |
| A2A4R4 | 0757-0280 | 3 | | RESISTOR 1K 1% .125W F TC=0+-100 | 24546 | C4-1/8-T0-1001-F |
| A2A4R5 | 0757-0280 | 3 | | RESISTOR 1K 1% .125W F TC=0+-100 | 24546 | C4-1/8-T0-1001-F |
| A2A4R6 | 0757-0280 | 3 | | RESISTOR 1K 1% .125W F TC=0+-100 | 24546 | C4-1/8-T0-1001-F |
| A2A4R7 | 0757-0280 | 3 | | RESISTOR 1K 1% .125W F TC=0+-100 | 24546 | C4-1/8-T0-1001-F |
| A2A4R8 | 0757-0440 | 7 | 2 | RESISTOR 7.5K 1% .125W F TC=0+-100 | 24546 | C4-1/8-T0-7501-F |
| A2A4R9 | 0757-0280 | 3 | | RESISTOR 1K 1% .125W F TC=0+-100 | 24546 | C4-1/8-T0-1001-F |
| A2A4R10 | 0757-0438 | 3 | 17 | RESISTOR 5.11K 1% .125W F TC=0+-100 | 24546 | C4-1/8-T0-5111-F |
| A2A4R11 | 0757-0440 | 7 | | RESISTOR 7.5K 1% .125W F TC=0+-100 | 24546 | C4-1/8-T0-7501-F |
| A2A4R12 | 0757-0422 | 5 | 4 | RESISTOR 909 1% .125W F TC=0+-100 | 24546 | C4-1/8-T0-909R-F |
| A2A4R13 | 0757-0422 | 5 | | RESISTOR 909 1% .125W F TC=0+-100 | 24546 | C4-1/8-T0-909R-F |
| A2A4R14 | 0757-0438 | 3 | | RESISTOR 5.11K 1% .125W F TC=0+-100 | 24546 | C4-1/8-T0-5111-F |
| A2A4R15 | 0698-3160 | 8 | | RESISTOR 31.6K 1% .125W F TC=0+-100 | 24546 | C4-1/8-T0-3162-F |
| A2A4R16 | 0757-0438 | 3 | | RESISTOR 5.11K 1% .125W F TC=0+-100 | 24546 | C4-1/8-T0-5111-F |
| A2A4R17 | 0757-0462 | 3 | 2 | RESISTOR 75K 1% .125W F TC=0+-100 | 24546 | C4-1/8-T0-7502-F |
| A2A4R18 | 0757-0458 | 7 | 6 | RESISTOR 51.1K 1% .125W F TC=0+-100 | 24546 | C4-1/8-T0-5112-F |
| A2A4R19 | 0757-0462 | 3 | | RESISTOR 75K 1% .125W F TC=0+-100 | 24546 | C4-1/8-T0-7502-F |
| A2A4R20 | 0757-0438 | 3 | | RESISTOR 5.11K 1% .125W F TC=0+-100 | 24546 | C4-1/8-T0-5111-F |
| A2A4R21 | 0757-0401 | 0 | | RESISTOR 100 1% .125W F TC=0+-100 | 24546 | C4-1/8-T0-101-F |
| A2A4R22 | 0757-0280 | 3 | | RESISTOR 1K 1% .125W F TC=0+-100 | 24546 | C4-1/8-T0-1001-F |
| A2A4R23 | 0757-0819 | 4 | 1 | RESISTOR 909 1% .5W F TC=0+-100 | 28480 | 0757-0819 |
| A2A4R24 | 0757-0280 | 3 | | RESISTOR 1K 1% .125W F TC=0+-100 | 24546 | C4-1/8-T0-1001-F |
| A2A4R25 | 0757-0424 | 7 | 1 | RESISTOR 1.1K 1% .125W F TC=0+-100 | 24546 | C4-1/8-T0-1101-F |
| A2A4R26 | 0698-3443 | 0 | 1 | RESISTOR 287 1% .125W F TC=0+-100 | 24546 | C4-1/8-T0-287R-F |
| A2A4R27 | 0698-3153 | 9 | 1 | RESISTOR 3.83K 1% .125W F TC=0+-100 | 24546 | C4-1/8-T0-3831-F |
| A2A4R28 | 0757-0346 | 2 | | RESISTOR 10 1% .125W F TC=0+-100 | 24546 | C4-1/8-T0-10R0-F |
| A2A4R29 | 0757-0200 | 7 | 1 | RESISTOR 5.62K 1% .125W F TC=0+-100 | 24546 | C4-1/8-T0-5621-F |
| A2A4R30 | 0757-0422 | 5 | | RESISTOR 909 1% .125W F TC=0+-100 | 24546 | C4-1/8-T0-909R-F |
| A2A4R31 | 0757-0278 | 9 | | RESISTOR 1.78K 1% .125W F TC=0+-100 | 24546 | C4-1/8-T0-1781-F |
| A2A4R32 | 0757-0401 | 0 | | RESISTOR 100 1% .125W F TC=0+-100 | 24546 | C4-1/8-T0-101-F |
| A2A4TP1 | 1251-0600 | 0 | | CONNECTOR-SGL CONT PIN 1.14-MM-BSC-SZ SQ | 28480 | 1251-0600 |
| A2A4TP2 | 1251-0600 | 0 | | CONNECTOR-SGL CONT PIN 1.14-MM-BSC-SZ SQ | 28480 | 1251-0600 |
| A2A4TP3 | 1251-0600 | 0 | | CONNECTOR-SGL CONT PIN 1.14-MM-BSC-SZ SQ | 28480 | 1251-0600 |
| A2A4TP4 | 1251-0600 | 0 | | CONNECTOR-SGL CONT PIN 1.14-MM-BSC-SZ SQ | 28480 | 1251-0600 |
| A2A4U1 | 1820-0429 | 8 | 2 | IC V RGLTR TO-39 | 18324 | LM309H |
| A2A4U2 | 1820-1197 | 9 | | IC GATE TTL LS NAND QUAD 2-INP | 01295 | SN74LS00N |
| A2A4U3 | 1820-0281 | 0 | 1 | IC FF TTL J-K M/S PULSE CLEAR DUAL | 01295 | SN74107N |
| A2A4U4 | 1820-0846 | 3 | 1 | IC BFR TTL NON-INV QUAD 1-INP | 27014 | DM8094N |
| A2A4U5 | 1820-0223 | 0 | 1 | IC OP AMP GP TO-99 PKG | 3L585 | CA301AT |
| A2A4U6 | 1820-1422 | 3 | | IC MV TTL LS MONOSTBL RETRIG | 01295 | SN74LS122N |
| A2A4U7 | 1820-1422 | 3 | | IC MV TTL LS MONOSTBL RETRIG | 01295 | SN74LS122N |
| A2A4U8 | 1820-1112 | 6 | | IC FF TTL LS D-TYPE POS-EDGE-TRIG | 01295 | SN74LS74AN |
| A2A4VR1 | 1902-3234 | 3 | 1 | DIODE-ZNR 19.6V 5% DO-35 PD=.4W | 28480 | 1902-3234 |
| A2A5 | 08672-60145 | 4 | 1 | DIVIDER ASSEMBLY- 20/30 | 28480 | 08672-60145 |
| A2A5C1 | 0160-2055 | 9 | | CAPACITOR-FXD .01UF +80-20% 100VDC CER | 28480 | 0160-2055 |
| A2A5C2 | 0180-0229 | 7 | 4 | CAPACITOR-FXD 33UF+-10% 10VDC TA | 56289 | 150D336X9010B2 |
| A2A5C3 | 0180-0229 | 7 | | CAPACITOR-FXD 33UF+-10% 10VDC TA | 56289 | 150D336X9010B2 |
| A2A5C4 | 0180-2205 | 3 | 1 | CAPACITOR-FXD .33UF+-10% 35VDC TA | 56289 | 150D334X9035A2 |
| A2A5C5 | 0160-3466 | 8 | | CAPACITOR-FXD 100PF +-10% 1KVDC CER | 28480 | 0160-3466 |
| A2A5C6 | 0160-2055 | 9 | | CAPACITOR-FXD .01UF +80-20% 100VDC CER | 28480 | 0160-2055 |
| A2A5C7 | 0180-0229 | 7 | | CAPACITOR-FXD 33UF+-10% 10VDC TA | 56289 | 150D336X9010B2 |
| A2A5C8 | 0180-0197 | 8 | | CAPACITOR-FXD 2.2UF+-10% 20VDC TA | 56289 | 150D225X9020A2 |
| A2A5C9 | 0160-2055 | 9 | | CAPACITOR-FXD .01UF +80-20% 100VDC CER | 28480 | 0160-2055 |
| A2A5C10 | 0160-2055 | 9 | | CAPACITOR-FXD .01UF +80-20% 100VDC CER | 28480 | 0160-2055 |
| A2A5C11 | 0160-2055 | 9 | | CAPACITOR-FXD .01UF +80-20% 100VDC CER | 28480 | 0160-2055 |
| A2A5C12 | 0160-2055 | 9 | | CAPACITOR-FXD .01UF +80-20% 100VDC CER | 28480 | 0160-2055 |
| A2A5C13 | 0160-2055 | 9 | | CAPACITOR-FXD .01UF +80-20% 100VDC CER | 28480 | 0160-2055 |
| A2A5C14 | 0160-2055 | 9 | | CAPACITOR-FXD .01UF +80-20% 100VDC CER | 28480 | 0160-2055 |
| A2A5C15 | 0160-2055 | 9 | | CAPACITOR-FXD .01UF +80-20% 100VDC CER | 28480 | 0160-2055 |

See introduction to this section for ordering information
*Indicates factory selected value
†Backdating information in Section VII



www.valuetronics.com

A2

## Table 6-3. Replaceable Parts

| Reference Designation | HP Part Number | C D | Qty | Description | Mfr Code | Mfr Part Number |
|---|---|---|---|---|---|---|
| A2A5C16 | 0160-2055 | 9 | | CAPACITOR-FXD .01UF +80-20% 100VDC CER | 28480 | 0160-2055 |
| A2A5C17 | 0160-2055 | 9 | | CAPACITOR-FXD .01UF +80-20% 100VDC CER | 28480 | 0160-2055 |
| A2A5C18 | 0160-2055 | 9 | | CAPACITOR-FXD .01UF +80-20% 100VDC CER | 28480 | 0160-2055 |
| A2A5C19 | 0160-3537 | 4 | 1 | CAPACITOR-FXD 680PF +-5% 100VDC MICA | 28480 | 0160-3537 |
| A2A5C20 | 0180-0229 | 7 | | CAPACITOR-FXD 33UF+-10% 10VDC TA | 56289 | 150D336X9010B2 |
| A2A5CR1 | 1901-0040 | 1 | | DIODE-SWITCHING 30V 50MA 2NS DO-35 | 28480 | 1901-0040 |
| A2A5J1 | 1250-0544 | 9 | | CONNECTOR-RF SM-SNP M SGL-HOLE-FR 50-OHM | 28480 | 1250-0544 |
| A2A5L1 | 9100-4078 | 3 | 2 | INDUCTOR 650H 5% | 28480 | 9100-4078 |
| A2A5L2 | 9100-1618 | 1 | 1 | INDUCTOR RF-CH-MLD 5.6UH 10% | 28480 | 9100-1618 |
| A2A5L3 | 9100-4078 | 3 | | INDUCTOR 650H 5% | 28480 | 9100-4078 |
| A2A5MP1 | 1205-0250 | 9 | | THERMAL LINK SGL TO-5/TO-39-CS | 28480 | 1205-0250 |
| A2A5MP2 | 08672-20134 | 7 | 1 | COVER-DIVIDER | 28480 | 08672-20134 |
| A2A5MP3 | 1200-0081 | 4 | | INSULATOR-FLG-BSHG NYLON | 28480 | 1200-0081 |
| A2A5MP4 | 2190-0016 | 3 | | WASHER-LK INTL T 3/8 IN .377-IN-ID | 28480 | 2190-0016 |
| A2A5MP5 | 2200-0101 | 0 | | SCREW-MACH 4-40 .188-IN-LG PAN-HD-POZI | 00000 | ORDER BY DESCRIPTION |
| A2A5MP6 | 2200-0103 | 2 | | SCREW-MACH 4-40 .25-IN-LG PAN-HD-POZI | 28480 | 2200-0103 |
| A2A5Q1 | 1854-0019 | 3 | 2 | TRANSISTOR NPN SI TO-18 PD=360MW | 28480 | 1854-0019 |
| A2A5R1 | 0698-3628 | 3 | 1 | RESISTOR 220 5% 2W MO TC=0+-200 | 28480 | 0698-3628 |
| A2A5R2 | 0757-0397 | 3 | 1 | RESISTOR 68.1 1% .125W F TC=0+-100 | 24546 | C4-1/8-T0-68R1-F |
| A2A5R3 | 0698-3444 | 1 | | RESISTOR 316 1% .125W F TC=0+-100 | 24546 | C4-1/8-T0-316R-F |
| A2A5R4 | 2100-2413 | 9 | 1 | RESISTOR-TRMR 200 10% C SIDE-ADJ 1-TRN | 30983 | ET50X201 |
| A2A5R5 | 0698-7216 | 3 | 16 | RESISTOR 147 1% .05W F TC=0+-100 | 24546 | C3-1/8-T0-147R-F |
| A2A5R6 | 0698-7216 | 3 | | RESISTOR 147 1% .05W F TC=0+-100 | 24546 | C3-1/8-T0-147R-F |
| A2A5R7 | 0698-7216 | 3 | | RESISTOR 147 1% .05W F TC=0+-100 | 24546 | C3-1/8-T0-147R-F |
| A2A5R8 | 0698-7216 | 3 | | RESISTOR 147 1% .05W F TC=0+-100 | 24546 | C3-1/8-T0-147R-F |
| A2A5R9 | 0757-0280 | 3 | | RESISTOR 1K 1% .125W F TC=0+-100 | 24546 | C4-1/8-T0-1001-F |
| A2A5R10 | 0757-0280 | 3 | | RESISTOR 1K 1% .125W F TC=0+-100 | 24546 | C4-1/8-T0-1001-F |
| A2A5R11 | 0757-0438 | 3 | | RESISTOR 5.11K 1% .125W F TC=0+-100 | 24546 | C4-1/8-T0-5111-F |
| A2A5R12 | 0698-3150 | 6 | 1 | RESISTOR 2.37K 1% .125W F TC=0+-100 | 24546 | C4-1/8-T0-2371-F |
| A2A5R13 | 0757-0438 | 3 | | RESISTOR 5.11K 1% .125W F TC=0+-100 | 24546 | C4-1/8-T0-5111-F |
| A2A5R14 | 0757-0280 | 3 | | RESISTOR 1K 1% .125W F TC=0+-100 | 24546 | C4-1/8-T0-1001-F |
| A2A5R15 | 0698-3444 | 1 | | RESISTOR 316 1% .125W F TC=0+-100 | 24546 | C4-1/8-T0-316R-F |
| A2A5R16 | 0698-7216 | 3 | | RESISTOR 147 1% .05W F TC=0+-100 | 24546 | C3-1/8-T0-147R-F |
| A2A5R17 | 0698-7216 | 3 | | RESISTOR 147 1% .05W F TC=0+-100 | 24546 | C3-1/8-T0-147R-F |
| A2A5R18 | 0698-7216 | 3 | | RESISTOR 147 1% .05W F TC=0+-100 | 24546 | C3-1/8-T0-147R-F |
| A2A5R19 | 0698-7216 | 3 | | RESISTOR 147 1% .05W F TC=0+-100 | 24546 | C3-1/8-T0-147R-F |
| A2A5R20 | 0698-3157 | 3 | 1 | RESISTOR 19.6K 1% .125W F TC=0+-100 | 24546 | C4-1/8-T0-1962-F |
| A2A5R21 | 0757-0280 | 3 | | RESISTOR 1K 1% .125W F TC=0+-100 | 24546 | C4-1/8-T0-1001-F |
| A2A5R22 | 0757-0280 | 3 | | RESISTOR 1K 1% .125W F TC=0+-100 | 24546 | C4-1/8-T0-1001-F |
| A2A5R23 | 0757-0280 | 3 | | RESISTOR 1K 1% .125W F TC=0+-100 | 24546 | C4-1/8-T0-1001-F |
| A2A5R24 | 0698-7216 | 3 | | RESISTOR 147 1% .05W F TC=0+-100 | 24546 | C3-1/8-T0-147R-F |
| A2A5R25 | 0698-7216 | 3 | | RESISTOR 147 1% .05W F TC=0+-100 | 24546 | C3-1/8-T0-147R-F |
| A2A5R26 | 0698-7216 | 3 | | RESISTOR 147 1% .05W F TC=0+-100 | 24546 | C3-1/8-T0-147R-F |
| A2A5R27 | 0698-7216 | 3 | | RESISTOR 147 1% .05W F TC=0+-100 | 24546 | C3-1/8-T0-147R-F |
| A2A5R28 | 0757-0280 | 3 | | RESISTOR 1K 1% .125W F TC=0+-100 | 24546 | C4-1/8-T0-1001-F |
| A2A5R29 | 0757-0422 | 5 | | RESISTOR 909 1% .125W F TC=0+-100 | 24546 | C4-1/8-T0-909R-F |
| A2A5R30 | 0757-0418 | 9 | | RESISTOR 619 1% .125W F TC=0+-100 | 24546 | C4-1/8-T0-619R-F |
| A2A5R31 | 0757-0418 | 9 | | RESISTOR 619 1% .125W F TC=0+-100 | 24546 | C4-1/8-T0-619R-F |
| A2A5R32 | 0757-0280 | 3 | | RESISTOR 1K 1% .125W F TC=0+-100 | 24546 | C4-1/8-T0-1001-F |
| A2A5R33 | 0757-0280 | 3 | | RESISTOR 1K 1% .125W F TC=0+-100 | 24546 | C4-1/8-T0-1001-F |
| A2A5R34 | 0698-7216 | 3 | | RESISTOR 147 1% .05W F TC=0+-100 | 24546 | C3-1/8-T0-147R-F |
| A2A5R35 | 0698-7216 | 3 | | RESISTOR 147 1% .05W F TC=0+-100 | 24546 | C3-1/8-T0-147R-F |
| A2A5R36 | 0698-7216 | 3 | | RESISTOR 147 1% .05W F TC=0+-100 | 24546 | C3-1/8-T0-147R-F |
| A2A5R37 | 0698-7216 | 3 | | RESISTOR 147 1% .05W F TC=0+-100 | 24546 | C3-1/8-T0-147R-F |
| A2A5TP1 | 1251-0600 | 0 | | CONNECTOR-SGL CONT PIN 1.14-MM-BSC-SZ SQ | 28480 | 1251-0600 |
| A2A5TP2 | 1251-0600 | 0 | | CONNECTOR-SGL CONT PIN 1.14-MM-BSC-SZ SQ | 28480 | 1251-0600 |
| A2A5TP3 | 1251-0600 | 0 | | CONNECTOR-SGL CONT PIN 1.14-MM-BSC-SZ SQ | 28480 | 1251-0600 |
| A2A5TP4 | 1251-0600 | 0 | | CONNECTOR-SGL CONT PIN 1.14-MM-BSC-SZ SQ | 28480 | 1251-0600 |
| A2A5TP5 | 1251-0600 | 0 | | CONNECTOR-SGL CONT PIN 1.14-MM-BSC-SZ SQ | 28480 | 1251-0600 |
| A2A5TP8 | 1251-0600 | 0 | | CONNECTOR-SGL CONT PIN 1.14-MM-BSC-SZ SQ | 28480 | 1251-0600 |

See introduction to this section for ordering information
*Indicates factory selected value
†Backdating information in Section VII



www.valuetronics.com

A2

Table 6-3. Replaceable Parts

| Reference Designation | HP Part Number | C D | Qty | Description | Mfr Code | Mfr Part Number |
|---|---|---|---|---|---|---|
| A2A5U1 | 1820-1251 | 6 | 5 | IC CNTR TTL LS DECD ASYNCHRO | 01295 | SN74LS196N |
| A2A5U2 | 1820-1251 | 6 | | IC CNTR TTL LS DECD ASYNCHRO | 01295 | SN74LS196N |
| A2A5U3 | 1820-1251 | 6 | | IC CNTR TTL LS DECD ASYNCHRO | 01295 | SN74LS196N |
| A2A5U4 | 1820-0261 | 6 | 1 | IC MV TTL MONOSTBL | 01295 | SN74121N |
| A2A5U5 | 1820-0686 | 9 | 1 | IC GATE TTL S AND TPL 3-INP | 01295 | SN74S11N |
| A2A5U6 | 1820-0629 | 0 | 2 | IC FF TTL S J-K NEG-EDGE-TRIG | 01295 | SN74S112N |
| A2A5U7 | 1820-0629 | 0 | | IC FF TTL S J-K NEG-EDGE-TRIG | 01295 | SN74S112N |
| A2A5U8 | 1820-1384 | 6 | 1 | IC PRESCR ECL | 52648 | SP8641B |
| A2A5U9 | 1820-0429 | 8 | | IC V RGLTR TO-39 | 18324 | LM309H |
| A2A5U10 | 1820-1251 | 6 | | IC CNTR TTL LS DECD ASYNCHRO | 01295 | SN74LS196N |
| A2A5U11 | 1820-1251 | 6 | | IC CNTR TTL LS DECD ASYNCHRO | 01295 | SN74LS196N |
| A2A5U12 | 1820-0909 | 9 | 1 | IC MULTR TTL | 01295 | SN74167N |
| A2A5U13 | 1820-0751 | 9 | 2 | IC CNTR TTL DECD NEG-EDGE-TRIG PRESET | 01295 | SN74196N |
| A2A5U14 | 1820-0751 | 9 | | IC CNTR TTL DECD NEG-EDGE-TRIG PRESET | 01295 | SN74196N |
| A2A5U15 | 1820-0685 | 9 | 1 | IC GATE TTL S NAND TPL 3-INP | 01295 | SN74S10N |
| A2A5U16 | 1820-0690 | 5 | 1 | IC BFR TTL S NAND DUAL 4-INP | 01295 | SN74S40N |
| A2A6 | | | | NOT ASSIGNED | | |
| A2A7 | 08673-60005 | 8 | 1 | I/O BOARD ASSEMBLY | 28480 | 08673-60005 |
| A2A7C1 | 0180-2820 | 6 | 12 | CAPACITOR-FXD 2.2UF+-10% 50VDC TA | 25088 | D2R2GS1B50K |
| A2A7C2 | 0180-2820 | 6 | | CAPACITOR-FXD 2.2UF+-10% 50VDC TA | 25088 | D2R2GS1B50K |
| A2A7C3 | 0160-0572 | 1 | 3 | CAPACITOR-FXD 2200PF +-20% 100VDC CER | 28480 | 0160-0572 |
| A2A7C4 | 0180-2820 | 6 | | CAPACITOR-FXD 2.2UF+-10% 50VDC TA | 25088 | D2R2GS1B50K |
| A2A7C5 | 0180-2820 | 6 | | CAPACITOR-FXD 2.2UF+-10% 50VDC TA | 25088 | D2R2GS1B50K |
| A2A7C6 | 0180-2820 | 6 | | CAPACITOR-FXD 2.2UF+-10% 50VDC TA | 25088 | D2R2GS1B50K |
| A2A7C7 | 0180-2820 | 6 | | CAPACITOR-FXD 2.2UF+-10% 50VDC TA | 25088 | D2R2GS1B50K |
| A2A7C8 | 0160-0576 | 5 | | CAPACITOR-FXD .1UF +-20% 50VDC CER | 28480 | 0160-0576 |
| A2A7C9 | 0180-2820 | 6 | | CAPACITOR-FXD 2.2UF+-10% 50VDC TA | 25088 | D2R2GS1B50K |
| A2A7C10 | 0180-2820 | 6 | | CAPACITOR-FXD 2.2UF+-10% 50VDC TA | 25088 | D2R2GS1B50K |
| A2A7C11 | 0180-2820 | 6 | | CAPACITOR-FXD 2.2UF+-10% 50VDC TA | 25088 | D2R2GS1B50K |
| A2A7C12 | 0160-0174 | 9 | 1 | CAPACITOR-FXD .47UF +80-20% 25VDC CER | 28480 | 0160-0174 |
| A2A7C13 | 0180-2820 | 6 | | CAPACITOR-FXD 2.2UF+-10% 50VDC TA | 25088 | D2R2GS1B50K |
| A2A7C14 | 0180-2820 | 6 | | CAPACITOR-FXD 2.2UF+-10% 50VDC TA | 25088 | D2R2GS1B50K |
| A2A7C15 | 0180-2820 | 6 | | CAPACITOR-FXD 2.2UF+-10% 50VDC TA | 25088 | D2R2GS1B50K |
| A2A7C16 | 0160-0572 | 1 | | CAPACITOR-FXD 2200PF +-20% 100VDC CER | 28480 | 0160-0572 |
| A2A7C17 | 0160-0572 | 1 | | CAPACITOR-FXD 2200PF +-20% 100VDC CER | 28480 | 0160-0572 |
| A2A7C18 | 0160-0153 | 4 | 1 | CAPACITOR-FXD 1000PF +-10% 200VDC POLYE | 28480 | 0160-0153 |
| A2A7C19 | 0160-4103 | 2 | 2 | CAPACITOR-FXD 220PF +-5% 100VDC CER | 72982 | 8121-M100-COG-221J |
| A2A7C20 | 0160-0162 | 5 | | CAPACITOR-FXD .022UF +-10% 200VDC POLYE | 28480 | 0160-0162 |
| A2A7C21 | 0170-0040 | 9 | | CAPACITOR-FXD .047UF +-10% 200VDC POLYE | 56289 | 292P47392 |
| A2A7C22 | 0160-4103 | 2 | | CAPACITOR-FXD 220PF +-5% 100VDC CER | 72982 | 8121-M100-COG-221J |
| A2A7CR1 | 1901-0050 | 3 | | DIODE-SWITCHING 80V 200MA 2NS DO-35 | 28480 | 1901-0050 |
| A2A7CR2 | 1901-0050 | 3 | | DIODE-SWITCHING 80V 200MA 2NS DO-35 | 28480 | 1901-0050 |
| A2A7CR3 | 1901-0050 | 3 | | DIODE-SWITCHING 80V 200MA 2NS DO-35 | 28480 | 1901-0050 |
| A2A7CR4 | 1901-0050 | 3 | | DIODE-SWITCHING 80V 200MA 2NS DO-35 | 28480 | 1901-0050 |
| A2A7CR5 | 1901-0050 | 3 | | DIODE-SWITCHING 80V 200MA 2NS DO-35 | 28480 | 1901-0050 |
| A2A7CR6 | 1901-0050 | 3 | | DIODE-SWITCHING 80V 200MA 2NS DO-35 | 28480 | 1901-0050 |
| A2A7CR7 | 1901-0050 | 3 | | DIODE-SWITCHING 80V 200MA 2NS DO-35 | 28480 | 1901-0050 |
| A2A7CR8 | 1901-0050 | 3 | | DIODE-SWITCHING 80V 200MA 2NS DO-35 | 28480 | 1901-0050 |
| A2A7CR9 | 1901-0050 | 3 | | DIODE-SWITCHING 80V 200MA 2NS DO-35 | 28480 | 1901-0050 |
| A2A7CR10 | 1901-0050 | 3 | | DIODE-SWITCHING 80V 200MA 2NS DO-35 | 28480 | 1901-0050 |
| A2A7CR11 | 1901-0050 | 3 | | DIODE-SWITCHING 80V 200MA 2NS DO-35 | 28480 | 1901-0050 |
| A2A7DS1 | 1990-0670 | 0 | 4 | LED-LAMP LUM-INT=1MCD IF=20MA-MAX BVR=5V | 28480 | 1990-0670 |
| A2A7DS2 | 1990-0670 | 0 | | LED-LAMP LUM-INT=1MCD IF=20MA-MAX BVR=5V | 28480 | 1990-0670 |
| A2A7DS3 | 1990-0670 | 0 | | LED-LAMP LUM-INT=1MCD IF=20MA-MAX BVR=5V | 28480 | 1990-0670 |
| A2A7DS4 | 1990-0670 | 0 | | LED-LAMP LUM-INT=1MCD IF=20MA-MAX BVR=5V | 28480 | 1990-0670 |
| A2A7L1 | 9100-3922 | 4 | | INDUCTOR-FIXED 120-1300 HZ | 28480 | 9100-3922 |
| A2A7MP1 | 1480-0073 | 6 | | PIN-ROLL .062-IN-DIA .25-IN-LG BE-CU | 28480 | 1480-0073 |
| A2A7MP2 | 4040-0748 | 3 | | EXTR-PC BD BLK POLYC .062-BD-THKNS | 28480 | 4040-0748 |
| A2A7MP3 | 4040-0755 | 2 | 1 | EXTR-PC BD VIO POLYC .062-BD-THKNS | 28480 | 4040-0755 |

See introduction to this section for ordering information
*Indicates factory selected value
†Backdating information in Section VII



www.valuetronics.com

A2

Table 6-3. Replaceable Parts

| Reference Designation | HP Part Number | C D | Qty | Description | Mfr Code | Mfr Part Number |
|---|---|---|---|---|---|---|
| A2A7Q1 | 1853-0281 | 9 | 5 | TRANSISTOR PNP 2N2907A SI TO-18 PD=400MW | 04713 | 2N2907A |
| A2A7Q2 | 1853-0281 | 9 | | TRANSISTOR PNP 2N2907A SI TO-18 PD=400MW | 04713 | 2N2907A |
| A2A7Q3 | 1853-0281 | 9 | | TRANSISTOR PNP 2N2907A SI TO-18 PD=400MW | 04713 | 2N2907A |
| A2A7Q4 | 1853-0281 | 9 | | TRANSISTOR PNP 2N2907A SI TO-18 PD=400MW | 04713 | 2N2907A |
| A2A7Q5 | 1853-0281 | 9 | | TRANSISTOR PNP 2N2907A SI TO-18 PD=400MW | 04713 | 2N2907A |
| A2A7Q6 | 1854-0477 | 7 | 2 | TRANSISTOR NPN 2N2222A SI TO-18 PD=500MW | 04713 | 2N2222A |
| A2A7Q7 | 1854-0477 | 7 | | TRANSISTOR NPN 2N2222A SI TO-18 PD=500MW | 04713 | 2N2222A |
| A2A7Q8 | 1853-0314 | 9 | 1 | TRANSISTOR PNP 2N2905A SI TO-39 PD=600MW | 04713 | 2N2905A |
| A2A7R1 | 0757-0465 | 6 | 6 | RESISTOR 100K 1% .125W F TC=0+-100 | 24546 | C4-1/8-T0-1003-F |
| A2A7R2 | 0757-0438 | 3 | | RESISTOR 5.11K 1% .125W F TC=0+-100 | 24546 | C4-1/8-T0-5111-F |
| A2A7R3 | 0757-0438 | 3 | | RESISTOR 5.11K 1% .125W F TC=0+-100 | 24546 | C4-1/8-T0-5111-F |
| A2A7R4 | 0698-0083 | 8 | | RESISTOR 1.96K 1% .125W F TC=0+-100 | 24546 | C4-1/8-T0-1961-F |
| A2A7R5 | 0757-0438 | 3 | | RESISTOR 5.11K 1% .125W F TC=0+-100 | 24546 | C4-1/8-T0-5111-F |
| A2A7R6 | 0698-3160 | 8 | | RESISTOR 31.6K 1% .125W F TC=0+-100 | 24546 | C4-1/8-T0-3162-F |
| A2A7R7 | 0757-0438 | 3 | | RESISTOR 5.11K 1% .125W F TC=0+-100 | 24546 | C4-1/8-T0-5111-F |
| A2A7R8 | 0757-0458 | 7 | | RESISTOR 51.1K 1% .125W F TC=0+-100 | 24546 | C4-1/8-T0-5112-F |
| A2A7R9 | 0698-3442 | 9 | 4 | RESISTOR 237 1% .125W F TC=0+-100 | 24546 | C4-1/8-T0-237R-F |
| A2A7R10 | 0757-0279 | 0 | | RESISTOR 3.16K 1% .125W F TC=0+-100 | 24546 | C4-1/8-T0-3161-F |
| A2A7R11 | 0698-3160 | 8 | | RESISTOR 31.6K 1% .125W F TC=0+-100 | 24546 | C4-1/8-T0-3162-F |
| A2A7R12 | 0757-0442 | 9 | | RESISTOR 10K 1% .125W F TC=0+-100 | 24546 | C4-1/8-T0-1002-F |
| A2A7R13 | 0757-0438 | 3 | | RESISTOR 5.11K 1% .125W F TC=0+-100 | 24546 | C4-1/8-T0-5111-F |
| A2A7R14 | 0757-0458 | 7 | | RESISTOR 51.1K 1% .125W F TC=0+-100 | 24546 | C4-1/8-T0-5112-F |
| A2A7R15 | 0698-3442 | 9 | | RESISTOR 237 1% .125W F TC=0+-100 | 24546 | C4-1/8-T0-237R-F |
| A2A7R16 | 0757-0458 | 7 | | RESISTOR 51.1K 1% .125W F TC=0+-100 | 24546 | C4-1/8-T0-5112-F |
| A2A7R17 | 0698-3160 | 8 | | RESISTOR 31.6K 1% .125W F TC=0+-100 | 24546 | C4-1/8-T0-3162-F |
| A2A7R18 | 0757-0442 | 9 | | RESISTOR 10K 1% .125W F TC=0+-100 | 24546 | C4-1/8-T0-1002-F |
| A2A7R19 | 0757-0438 | 3 | | RESISTOR 5.11K 1% .125W F TC=0+-100 | 24546 | C4-1/8-T0-5111-F |
| A2A7R20 | 0698-3442 | 9 | | RESISTOR 237 1% .125W F TC=0+-100 | 24546 | C4-1/8-T0-237R-F |
| A2A7R21 | 0698-3160 | 8 | | RESISTOR 31.6K 1% .125W F TC=0+-100 | 24546 | C4-1/8-T0-3162-F |
| A2A7R22 | 0757-0438 | 3 | | RESISTOR 5.11K 1% .125W F TC=0+-100 | 24546 | C4-1/8-T0-5111-F |
| A2A7R23 | 0698-3442 | 9 | | RESISTOR 237 1% .125W F TC=0+-100 | 24546 | C4-1/8-T0-237R-F |
| A2A7R24 | 0757-0438 | 3 | | RESISTOR 5.11K 1% .125W F TC=0+-100 | 24546 | C4-1/8-T0-5111-F |
| A2A7R25 | 0757-0159 | 5 | 1 | RESISTOR 1K 1% .5W F TC=0+-100 | 28480 | 0757-0159 |
| A2A7R26 | 0698-0083 | 8 | | RESISTOR 1.96K 1% .125W F TC=0+-100 | 24546 | C4-1/8-T0-1961-F |
| A2A7R27 | 0757-0438 | 3 | | RESISTOR 5.11K 1% .125W F TC=0+-100 | 24546 | C4-1/8-T0-5111-F |
| A2A7R28 | 0757-0199 | 3 | | RESISTOR 21.5K 1% .125W F TC=0+-100 | 24546 | C4-1/8-T0-2152-F |
| A2A7R29 | 0757-0438 | 3 | | RESISTOR 5.11K 1% .125W F TC=0+-100 | 24546 | C4-1/8-T0-5111-F |
| A2A7R30 | 0757-0438 | 3 | | RESISTOR 5.11K 1% .125W F TC=0+-100 | 24546 | C4-1/8-T0-5111-F |
| A2A7R31 | 0698-0083 | 8 | | RESISTOR 1.96K 1% .125W F TC=0+-100 | 24546 | C4-1/8-T0-1961-F |
| A2A7R32 | 0698-0083 | 8 | | RESISTOR 1.96K 1% .125W F TC=0+-100 | 24546 | C4-1/8-T0-1961-F |
| A2A7R33 | 1810-0280 | 8 | | NETWORK-RES 10-SIP10.0K OHM X 9 | 01121 | 210A103 |
| A2A7R34 | 2100-3353 | 8 | 2 | RESISTOR-TRMR 20K 10% C SIDE-ADJ 1-TRN | 28480 | 2100-3353 |
| A2A7R35 | 0757-0442 | 9 | | RESISTOR 10K 1% .125W F TC=0+-100 | 24546 | C4-1/8-T0-1002-F |
| A2A7R36 | 0698-0083 | 8 | | RESISTOR 1.96K 1% .125W F TC=0+-100 | 24546 | C4-1/8-T0-1961-F |
| A2A7R37 | 0757-0279 | 0 | | RESISTOR 3.16K 1% .125W F TC=0+-100 | 24546 | C4-1/8-T0-3161-F |
| A2A7R38 | 0757-0274 | 5 | 3 | RESISTOR 1.21K 1% .125W F TC=0+-100 | 24546 | C4-1/8-T0-1211-F |
| A2A7R39 | 0757-0279 | 0 | | RESISTOR 3.16K 1% .125W F TC=0+-100 | 24546 | C4-1/8-T0-3161-F |
| A2A7R40 | 0757-0442 | 9 | | RESISTOR 10K 1% .125W F TC=0+-100 | 24546 | C4-1/8-T0-1002-F |
| A2A7R41 | 0757-0401 | 0 | | RESISTOR 100 1% .125W F TC=0+-100 | 24546 | C4-1/8-T0-101-F |
| A2A7R42 | 0698-3161 | 9 | 1 | RESISTOR 38.3K 1% .125W F TC=0+-100 | 24546 | C4-1/8-T0-3832-F |
| A2A7R43 | 0757-0279 | 0 | | RESISTOR 3.16K 1% .125W F TC=0+-100 | 24546 | C4-1/8-T0-3161-F |
| A2A7R44 | 0757-0401 | 0 | | RESISTOR 100 1% .125W F TC=0+-100 | 24546 | C4-1/8-T0-101-F |
| A2A7R45 | 0757-0465 | 6 | | RESISTOR 100K 1% .125W F TC=0+-100 | 24546 | C4-1/8-T0-1003-F |
| A2A7R46 | 0757-0442 | 9 | | RESISTOR 10K 1% .125W F TC=0+-100 | 24546 | C4-1/8-T0-1002-F |
| A2A7R47 | 0757-0465 | 6 | | RESISTOR 100K 1% .125W F TC=0+-100 | 24546 | C4-1/8-T0-1003-F |
| A2A7R48 | 0757-0401 | 0 | | RESISTOR 100 1% .125W F TC=0+-100 | 24546 | C4-1/8-T0-101-F |
| A2A7R49 | 0757-0465 | 6 | | RESISTOR 100K 1% .125W F TC=0+-100 | 24546 | C4-1/8-T0-1003-F |
| A2A7R50 | 2100-3353 | 8 | | RESISTOR-TRMR 20K 10% C SIDE-ADJ 1-TRN | 28480 | 2100-3353 |
| A2A7R51 | 0757-0442 | 9 | | RESISTOR 10K 1% .125W F TC=0+-100 | 24546 | C4-1/8-T0-1002-F |
| A2A7R52 | 0757-0458 | 7 | | RESISTOR 51.1K 1% .125W F TC=0+-100 | 24546 | C4-1/8-T0-5112-F |
| A2A7R53 | 0757-0465 | 6 | | RESISTOR 100K 1% .125W F TC=0+-100 | 24546 | C4-1/8-T0-1003-F |
| A2A7R54 | 0757-0458 | 7 | | RESISTOR 51.1K 1% .125W F TC=0+-100 | 24546 | C4-1/8-T0-5112-F |
| A2A7R55 | 0757-0401 | 0 | | RESISTOR 100 1% .125W F TC=0+-100 | 24546 | C4-1/8-T0-101-F |

See introduction to this section for ordering information
*Indicates factory selected value
†Backdating information in Section VII



www.valuetronics.com

A2

Table 6-3. Replaceable Parts

| Reference Designation | HP Part Number | CD | Qty | Description | Mfr Code | Mfr Part Number |
|---|---|---|---|---|---|---|
| A2A7R56 | 0757-0480 | 1 | 1 | RESISTOR 61.9K 1% .125W F TC=0+-100 | 24546 | C4-1/8-T0-6192-F |
| A2A7R57 | 0757-0274 | 5 | | RESISTOR 1.21K 1% .125W F TC=0+-100 | 24546 | C4-1/8-T0-1211-F |
| A2A7R58 | 0757-0274 | 5 | | RESISTOR 1.21K 1% .125W F TC=0+-100 | 24546 | C4-1/8-T0-1211-F |
| A2A7S1 | 3101-2747 | 5 | 1 | 8-POS AI DIP SW | 28480 | 3101-2747 |
| A2A7TP1 | 1251-0600 | 0 | | CONNECTOR-SGL CONT PIN 1.14-MM-BSC-SZ SQ | 28480 | 1251-0600 |
| A2A7TP2 | 1251-0600 | 0 | | CONNECTOR-SGL CONT PIN 1.14-MM-BSC-SZ SQ | 28480 | 1251-0600 |
| A2A7TP3 | 1251-0600 | 0 | | CONNECTOR-SGL CONT PIN 1.14-MM-BSC-SZ SQ | 28480 | 1251-0600 |
| A2A7TP4 | 1251-0600 | 0 | | CONNECTOR-SGL CONT PIN 1.14-MM-BSC-SZ SQ | 28480 | 1251-0600 |
| A2A7U1 | 1820-2079 | 8 | 1 | IC GATE CMOS NOR DUAL 4-INP | 04713 | MC14002BCP |
| A2A7U2 | 1820-1202 | 7 | | IC GATE TTL LS NAND TPL 3-INP | 01295 | SN74LS10N |
| A2A7U3 | 1820-1422 | 3 | | IC MV TTL LS MONOSTBL RETRIG | 01295 | SN74LS122N |
| A2A7U4 | 1820-1197 | 9 | | IC GATE TTL LS NAND QUAD 2-INP | 01295 | SN74LS00N |
| A2A7U5 | 1820-1216 | 3 | | IC DCDR TTL LS 3-TO-8-LINE 3-INP | 01295 | SN74LS138N |
| A2A7U6 | 1820-0693 | 8 | 2 | IC FF TTL S D-TYPE POS-EDGE-TRIG | 01295 | SN74S74N |
| A2A7U7 | 1820-1858 | 9 | | IC FF TTL LS D-TYPE OCTL | 01295 | SN74LS377N |
| A2A7U8 | 1826-0600 | 9 | 2 | IC OP AMP LOW-BIAS-H-IMPD QUAD 14-DIP-P | 01295 | TL074ACN |
| A2A7U9 | 1820-1199 | 1 | | IC INV TTL LS HEX 1-INP | 01295 | SN74LS04N |
| A2A7U10 | 1820-1445 | 0 | 1 | IC LCH TTL LS 4-BIT | 01295 | SN74LS375N |
| A2A7U11 | 1820-2081 | 2 | 2 | IC NMOS | 04713 | MC68A21P |
| A2A7U12 | 1820-1759 | 9 | 20 | IC BFR TTL LS NON-INV OCTL | 27014 | DM81LS97N |
| A2A7U13 | 1820-1759 | 9 | | IC BFR TTL LS NON-INV OCTL | 27014 | DM81LS97N |
| A2A7U14 | 1826-0462 | 1 | 1 | IC CONV 10-B-D/A 16-DIP-C PKG | 04713 | MC3410CL |
| A2A7U15 | 1820-0693 | 8 | | IC FF TTL S D-TYPE POS-EDGE-TRIG | 01295 | SN74S74N |
| A2A7U16 | 1820-1195 | 7 | | IC FF TTL LS D-TYPE POS-EDGE-TRIG COM | 01295 | SN74LS175N |
| A2A7U17 | 1820-1747 | 5 | 2 | IC GATE CMOS NAND QUAD 2-INP | 04713 | MC14011BCP |
| A2A7U18 | 1826-0600 | 9 | | IC OP AMP LOW-BIAS-H-IMPD QUAD 14-DIP-P | 01295 | TL074ACN |
| A2A7U19 | 1820-1419 | 8 | 1 | IC COMPTR TTL LS MAGTD 4-BIT | 01295 | SN74LS85N |
| A2A7U20 | 1820-1759 | 9 | | IC BFR TTL LS NON-INV OCTL | 27014 | DM81LS97N |
| A2A7U21 | 1820-1858 | 9 | | IC FF TTL LS D-TYPE OCTL | 01295 | SN74LS377N |
| A2A7U22 | 1820-1858 | 9 | | IC FF TTL LS D-TYPE OCTL | 01295 | SN74LS377N |
| A2A7U23 | 1826-0026 | 3 | 1 | IC COMPARATOR PRCN TO-99 PKG | 01295 | LM311L |
| A2A7U24 | 1820-1285 | 6 | 1 | IC GATE TTL LS AND-OR-INV 4-INP | 01295 | SN74LS54N |
| A2A7U25 | 1820-1199 | 1 | | IC INV TTL LS HEX 1-INP | 01295 | SN74LS04N |
| A2A7U26 | 1820-1759 | 9 | | IC BFR TTL LS NON-INV OCTL | 27014 | DM81LS97N |
| A2A7VR1 | 1902-0962 | 8 | 1 | DIODE-ZNR 15V 5% DO-35 PD=.4W TC=+.087% | 28480 | 1902-0962 |
| A2A7VR2 | 1902-0950 | 4 | 1 | DIODE-ZNR 4.7V 5% DO-35 PD=.4W TC=+.025% | 28480 | 1902-0950 |
| A2A7XU11 | 1200-0654 | 7 | 3 | SOCKET-IC 40-CONT DIP DIP-SLDR | 28480 | 1200-0654 |
| A2A8 | 08673-60110 | 4 | 1 | MICROPROCESSOR BOARD ASSEMBLY | 28480 | 08673-60110 |
| A2A8C1 | 0160-2055 | 9 | | CAPACITOR-FXD .01UF +80-20% 100VDC CER | 28480 | 0160-2055 |
| A2A8C2 | 0180-0197 | 8 | | CAPACITOR-FXD 2.2UF+-10% 20VDC TA | 56289 | 150D225X9020A2 |
| A2A8C3 | 0180-0197 | 8 | | CAPACITOR-FXD 2.2UF+-10% 20VDC TA | 56289 | 150D225X9020A2 |
| A2A8C4 | 0180-0197 | 8 | | CAPACITOR-FXD 2.2UF+-10% 20VDC TA | 56289 | 150D225X9020A2 |
| A2A8C5 | 0180-0197 | 8 | | CAPACITOR-FXD 2.2UF+-10% 20VDC TA | 56289 | 150D225X9020A2 |
| A2A8C6 | 0180-0197 | 8 | | CAPACITOR-FXD 2.2UF+-10% 20VDC TA | 56289 | 150D225X9020A2 |
| A2A8C7 | 0180-0197 | 8 | | CAPACITOR-FXD 2.2UF+-10% 20VDC TA | 56289 | 150D225X9020A2 |
| A2A8C8 | 0180-0197 | 8 | | CAPACITOR-FXD 2.2UF+-10% 20VDC TA | 56289 | 150D225X9020A2 |
| A2A8C9 | 0160-2255 | 1 | 1 | CAPACITOR-FXD 8.2PF +-.25PF 500VDC CER | 28480 | 0160-2255 |
| A2A8C10 | 0160-3466 | 8 | | CAPACITOR-FXD 100PF +-10% 1KVDC CER | 28480 | 0160-3466 |
| A2A8C11 | 0180-0197 | 8 | | CAPACITOR-FXD 2.2UF+-10% 20VDC TA | 56289 | 150D225X9020A2 |
| A2A8C12 | 0160-2055 | 9 | | CAPACITOR-FXD .01UF +80-20% 100VDC CER | 28480 | 0160-2055 |
| A2A8CR1 | 1901-0028 | 5 | 1 | DIODE-PWR RECT 400V 750MA DO-29 | 28480 | 1901-0028 |
| A2A8L1 | 9100-3922 | 4 | | INDUCTOR-FIXED 120-1300 HZ | 28480 | 9100-3922 |
| A2A8L2 | 9140-0179 | 1 | 1 | INDUCTOR RF-CH-MLD 22UH 10% .186DX.385LG | 28480 | 9140-0179 |
| A2A8MP1 | 1480-0073 | 6 | | PIN-ROLL .062-IN-DIA .25-IN-LG BE-CU | 28480 | 1480-0073 |
| A2A8MP2 | 4040-0747 | 2 | 1 | EXTR-PC BD GRA POLYC .062-BD-THKNS | 28480 | 4040-0747 |
| A2A8MP3 | 4040-0748 | 3 | | EXTR-PC BD BLK POLYC .062-BD-THKNS | 28480 | 4040-0748 |
| A2A8MP4 | 1251-0600 | 0 | | CONNECTOR-SGL CONT PIN 1.14-MM-BSC-SZ SQ | 28480 | 1251-0600 |
| A2A8Q1 | 1853-0393 | 4 | 1 | TRANSISTOR PNP SI TO-18 PD=500MW | 28480 | 1853-0393 |
| A2A8Q2 | 1854-0019 | 3 | | TRANSISTOR NPN SI TO-18 PD=360MW | 28480 | 1854-0019 |

See introduction to this section for ordering information
*Indicates factory selected value
†Backdating information in Section VII



www.valuetronics.com

A2

Table 6-3. Replaceable Parts

| Reference Designation | HP Part Number | C D | Qty | Description | Mfr Code | Mfr Part Number |
|---|---|---|---|---|---|---|
| A2A8R1 | 0757-0279 | 0 | | RESISTOR 3.16K 1% .125W F TC=0+-100 | 24546 | C4-1/8-T0-3161-F |
| A2A8R2 | 0757-0279 | 0 | | RESISTOR 3.16K 1% .125W F TC=0+-100 | 24546 | C4-1/8-T0-3161-F |
| A2A8R3 | 0757-0279 | 0 | | RESISTOR 3.16K 1% .125W F TC=0+-100 | 24546 | C4-1/8-T0-3161-F |
| A2A8R4 | 0698-3444 | 1 | | RESISTOR 316 1% .125W F TC=0+-100 | 24546 | C4-1/8-T0-316R-F |
| A2A8R5 | 0757-0279 | 0 | | RESISTOR 3.16K 1% .125W F TC=0+-100 | 24546 | C4-1/8-T0-3161-F |
| A2A8R6 | 0757-0442 | 9 | | RESISTOR 10K 1% .125W F TC=0+-100 | 24546 | C4-1/8-T0-1002-F |
| A2A8R7 | 0757-0442 | 9 | | RESISTOR 10K 1% .125W F TC=0+-100 | 24546 | C4-1/8-T0-1002-F |
| A2A8R8 | 0757-0199 | 3 | | RESISTOR 21.5K 1% .125W F TC=0+-100 | 24546 | C4-1/8-T0-2152-F |
| A2A8R9 | 0757-0416 | 7 | | RESISTOR 511 1% .125W F TC=0+-100 | 24546 | C4-1/8-T0-511R-F |
| A2A8R10 | 0757-0280 | 3 | | RESISTOR 1K 1% .125W F TC=0+-100 | 24546 | C4-1/8-T0-1001-F |
| A2A8R11 | 0757-0279 | 0 | | RESISTOR 3.16K 1% .125W F TC=0+-100 | 24546 | C4-1/8-T0-3161-F |
| A2A8R12 | 0757-0279 | 0 | | RESISTOR 3.16K 1% .125W F TC=0+-100 | 24546 | C4-1/8-T0-3161-F |
| A2A8R13 | 0757-0279 | 0 | | RESISTOR 3.16K 1% .125W F TC=0+-100 | 24546 | C4-1/8-T0-3161-F |
| A2A8R14 | 0757-0199 | 3 | | RESISTOR 21.5K 1% .125W F TC=0+-100 | 24546 | C4-1/8-T0-2152-F |
| A2A8R15 | 0757-0279 | 0 | | RESISTOR 3.16K 1% .125W F TC=0+-100 | 24546 | C4-1/8-T0-3161-F |
| A2A8R16 | 0757-0279 | 0 | | RESISTOR 3.16K 1% .125W F TC=0+-100 | 24546 | C4-1/8-T0-3161-F |
| A2A8R17 | 0757-0442 | 9 | | RESISTOR 10K 1% .125W F TC=0+-100 | 24546 | C4-1/8-T0-1002-F |
| A2A8R18 | 0757-0280 | 3 | | RESISTOR 1K 1% .125W F TC=0+-100 | 24546 | C4-1/8-T0-1001-F |
| A2A8R19 | 0757-0280 | 3 | | RESISTOR 1K 1% .125W F TC=0+-100 | 24546 | C4-1/8-T0-1001-F |
| A2A8R20 | 0757-0280 | 3 | | RESISTOR 1K 1% .125W F TC=0+-100 | 24546 | C4-1/8-T0-1001-F |
| A2A8R21 | 0757-0442 | 9 | | RESISTOR 10K 1% .125W F TC=0+-100 | 24546 | C4-1/8-T0-1002-F |
| A2A8R22 | 1810-0275 | 1 | 3 | NETWORK-RES 10-SIP1.0K OHM X 9 | 01121 | 210A102 |
| A2A8S1 | 3100-3364 | 2 | 1 | SWITCH-ROTARY 16 PIN DIP 4PDT 16 POS | 28480 | 3100-3364 |
| A2A8TP1 | 1251-0600 | 0 | | CONNECTOR-SGL CONT PIN 1.14-MM-BSC-SZ SQ | 28480 | 1251-0600 |
| A2A8TP2 | 1251-0600 | 0 | | CONNECTOR-SGL CONT PIN 1.14-MM-BSC-SZ SQ | 28480 | 1251-0600 |
| A2A8TP2G | 1251-0600 | 0 | 31 | CONNECTOR-SGL CONT PIN 1.14-MM-BSC-SZ SQ | 28480 | 1251-0600 |
| A2A8TP3 | 1251-0600 | 0 | | CONNECTOR-SGL CONT PIN 1.14-MM-BSC-SZ SQ | 28480 | 1251-0600 |
| A2A8TP4 | 1251-0600 | 0 | | CONNECTOR-SGL CONT PIN 1.14-MM-BSC-SZ SQ | 28480 | 1251-0600 |
| A2A8TP5 | 1251-0600 | 0 | | CONNECTOR-SGL CONT PIN 1.14-MM-BSC-SZ SQ | 28480 | 1251-0600 |
| A2A8TP5G | 1251-0600 | 0 | | CONNECTOR-SGL CONT PIN 1.14-MM-BSC-SZ SQ | 28480 | 1251-0600 |
| A2A8U1 | 1820-1112 | 8 | | IC FF TTL LS D-TYPE POS-EDGE-TRIG | 01295 | SN74LS74AN |
| A2A8U2 | 1820-1201 | 6 | | IC GATE TTL LS AND QUAD 2-INP | 01295 | SN74LS08N |
| A2A8U3 | 08673-80018 | 3 | 1 | ROM-PROGRAMMED | 28480 | 08673-80018 |
| A2A8U4 | 1820-1201 | 6 | | IC GATE TTL LS AND QUAD 2-INP | 01295 | SN74LS08N |
| A2A8U5 | 1820-1144 | 6 | 1 | IC GATE TTL LS NOR QUAD 2-INP | 01295 | SN74LS02N |
| A2A8U6 | 1820-2240 | 5 | 1 | IC MPU; CLK FREQ=1.5MHZ, W/INTNL CLK | 28480 | 1820-2240 |
| A2A8U7 | 1820-1203 | 8 | 1 | IC GATE TTL LS AND TPL 3-INP | 01295 | SN74LS11N |
| A2A8U8 | 1820-2468 | 0 | 1 | IC-MICROPROCESSOR | 28480 | 1820-2468 |
| A2A8U9 | 1820-1759 | 9 | | IC BFR TTL LS NON-INV OCTL | 27014 | DM81LS97N |
| A2A8U10 | 1820-1112 | 8 | | IC FF TTL LS D-TYPE POS-EDGE-TRIG | 01295 | SN74LS74AN |
| A2A8U11 | 1820-1197 | 9 | | IC GATE TTL LS NAND QUAD 2-INP | 01295 | SN74LS00N |
| A2A8U12 | 1820-1197 | 9 | | IC GATE TTL LS NAND QUAD 2-INP | 01295 | SN74LS00N |
| A2A8U13 | 1820-1216 | 3 | | IC DCDR TTL LS 3-TO-8-LINE 3-INP | 01295 | SN74LS138N |
| A2A8U14 | 1820-1216 | 3 | | IC DCDR TTL LS 3-TO-8-LINE 3-INP | 01295 | SN74LS138N |
| A2A8U15 | 1820-1197 | 9 | | IC GATE TTL LS NAND QUAD 2-INP | 01295 | SN74LS00N |
| A2A8U16 | 1820-1202 | 7 | | IC GATE TTL LS NAND TPL 3-INP | 01295 | SN74LS10N |
| A2A8U17 | 1820-1199 | 1 | | IC INV TTL LS HEX 1-INP | 01295 | SN74LS04N |
| A2A8U18 | 1820-1932 | 0 | 1 | IC MV CMOS MONOSTBL RETRIG/RESET DUAL | 04713 | MC14538BCP |
| A2A8U19 | 1820-1747 | 5 | | IC GATE CMOS NAND QUAD 2-INP | 04713 | MC14011BCP |
| A2A8U20 | 1820-1746 | 4 | 2 | IC BFR CMOS INV HEX | 04713 | MC14049UBCP |
| A2A8U21 | 1820-1216 | 3 | | IC DCDR TTL LS 3-TO-8-LINE 3-INP | 01295 | SN74LS138N |
| A2A8U22 | 1820-1759 | 9 | | IC BFR TTL LS NON-INV OCTL | 27014 | DM81LS97N |
| A2A8U23 | 1820-1759 | 9 | | IC BFR TTL LS NON-INV OCTL | 27014 | DM81LS97N |
| A2A8U24 | 1820-1851 | 2 | | IC ENCDR TTL LS | 01295 | SN74LS148N |
| A2A8U25 | 1820-1759 | 9 | | IC BFR TTL LS NON-INV OCTL | 27014 | DM81LS97N |
| A2A8U26 | 1820-1759 | 9 | | IC BFR TTL LS NON-INV OCTL | 27014 | DM81LS97N |
| A2A8U27 | 1820-1759 | 9 | | IC BFR TTL LS NON-INV OCTL | 27014 | DM81LS97N |
| A2A8U28 | 1820-2102 | 8 | 1 | IC LCH TTL LS D-TYPE OCTL | 01295 | SN74LS373N |
| A2A8XU3 | 1200-0541 | 1 | 2 | SOCKET-IC 24-CONT DIP DIP-SLDR | 28480 | 1200-0541 |
| A2A8XU8 | 1200-0654 | 7 | | SOCKET-IC 40-CONT DIP DIP-SLDR | 28480 | 1200-0654 |
| A2A8 | 08673-60006 | 7 | 1 | FREQUENCY/HP-IB BOARD ASSEMBLY | 28480 | 08673-60006 |

See introduction to this section for ordering information
*Indicates factory selected value
†Backdating information in Section VII



www.valuetronics.com

A2

Table 6-3. Replaceable Parts

| Reference Designation | HP Part Number | CD | Qty | Description | Mfr Code | Mfr Part Number |
|---|---|---|---|---|---|---|
| A2A9C1 | 0180-0116 | 1 | | CAPACITOR-FXD 6.8UF+-10% 35VDC TA | 56289 | 150D685X9035B2 |
| A2A9C2 | 0180-0116 | 1 | | CAPACITOR-FXD 6.8UF+-10% 35VDC TA | 56289 | 150D685X9035B2 |
| A2A9C3 | 0180-0116 | 1 | | CAPACITOR-FXD 6.8UF+-10% 35VDC TA | 56289 | 150D685X9035B2 |
| A2A9L1 | 9100-3922 | 4 | | INDUCTOR-FIXED 120-1300 HZ | 28480 | 9100-3922 |
| A2A9MP1 | 1480-0073 | 6 | | PIN-ROLL .062-IN-DIA .25-IN-LG BE-CU | 28480 | 1480-0073 |
| A2A9MP2 | 4040-0748 | 3 | | EXTR-PC BD BLK POLYC .062-BD-THKNS | 28480 | 4040-0748 |
| A2A9MP3 | 4040-0756 | 3 | 1 | EXTR-PC BD WHT POLYC .062-BD-THKNS | 28480 | 4040-0756 |
| A2A9Q1 | 1854-0071 | 7 | | TRANSISTOR NPN SI PD=300MW FT=200MHZ | 28480 | 1854-0071 |
| A2A9Q2 | 1854-0071 | 7 | | TRANSISTOR NPN SI PD=300MW FT=200MHZ | 28480 | 1854-0071 |
| A2A9R1 | 1810-0275 | 1 | | NETWORK-RES 10-SIP1.0K OHM X 9 | 01121 | 210A102 |
| A2A9R2 | 0757-0442 | 9 | | RESISTOR 10K 1% .125W F TC=0+-100 | 24546 | C4-1/8-T0-1002-F |
| A2A9R3 | 0757-0442 | 9 | | RESISTOR 10K 1% .125W F TC=0+-100 | 24546 | C4-1/8-T0-1002-F |
| A2A9R4 | 1810-0275 | 1 | | NETWORK-RES 10-SIP1.0K OHM X 9 | 01121 | 210A102 |
| A2A9R5 | 0757-0416 | 7 | | RESISTOR 511 1% .125W F TC=0+-100 | 24546 | C4-1/8-T0-511R-F |
| A2A9R6 | 0757-0416 | 7 | | RESISTOR 511 1% .125W F TC=0+-100 | 24546 | C4-1/8-T0-511R-F |
| A2A9R7 | 0757-0442 | 9 | | RESISTOR 10K 1% .125W F TC=0+-100 | 24546 | C4-1/8-T0-1002-F |
| A2A9S1 | 3101-1856 | 5 | 1 | SWITCH-SL 8-1A DIP-SLIDE-ASSY .1A 50VDC | 28480 | 3101-1956 |
| A2A9TP1 | 1251-0600 | 0 | | CONNECTOR-SGL CONT PIN 1.14-MM-BSC-SZ SQ | 28480 | 1251-0600 |
| A2A9U1 | 1820-1955 | 7 | 5 | IC ADDR CMOS FULL ADDER 4-BIT | 3L585 | CD4008BE |
| A2A9U2 | 1820-1955 | 7 | | IC ADDR CMOS FULL ADDER 4-BIT | 3L585 | CD4008BE |
| A2A9U3 | 1820-1955 | 7 | | IC ADDR CMOS FULL ADDER 4-BIT | 3L585 | CD4008BE |
| A2A9U4 | 1820-1955 | 7 | | IC ADDR CMOS FULL ADDER 4-BIT | 3L585 | CD4008BE |
| A2A9U5 | 1820-1955 | 7 | | IC ADDR CMOS FULL ADDER 4-BIT | 3L585 | CD4008BE |
| A2A9U6 | 1820-1208 | 3 | 2 | IC GATE TTL LS OR QUAD 2-INP | 01295 | SN74LS32N |
| A2A9U7 | 1820-1197 | 9 | | IC GATE TTL LS NAND QUAD 2-INP | 01295 | SN74LS00N |
| A2A9U8 | 1820-1216 | 3 | | IC DCDR TTL LS 3-TO-8-LINE 3-INP | 01295 | SN74LS138N |
| A2A9U9 | 1820-1199 | 1 | | IC INV TTL LS HEX 1-INP | 01295 | SN74LS04N |
| A2A9U10 | 1820-2549 | 7 | 1 | IC-8291A P HPIB | 28480 | 1820-2549 |
| A2A9U11 | 1820-2485 | 0 | 1 | IC RCVR TTL LS BUS OCTL | 01295 | SN75160N |
| A2A9U12 | 1820-1745 | 4 | | IC BFR CMOS INV HEX | 04713 | MC14049UBCP |
| A2A9U13 | 1820-1976 | 2 | 2 | IC BFR CMOS NON-INV HEX | 3L585 | CD4050BE |
| A2A9U14 | 1820-1976 | 2 | | IC BFR CMOS NON-INV HEX | 3L585 | CD4050BE |
| A2A9U15 | 1820-1858 | 9 | | IC FF TTL LS D-TYPE OCTL | 01295 | SN74LS377N |
| A2A9U16 | 1820-1858 | 9 | | IC FF TTL LS D-TYPE OCTL | 01295 | SN74LS377N |
| A2A9U17 | 1820-1858 | 9 | | IC FF TTL LS D-TYPE OCTL | 01295 | SN74LS377N |
| A2A9U18 | 1820-1858 | 9 | | IC FF TTL LS D-TYPE OCTL | 01295 | SN74LS377N |
| A2A9U19 | 1820-1759 | 9 | | IC BFR TTL LS NON-INV OCTL | 27014 | DM81LS97N |
| A2A9U20 | 1820-1759 | 9 | | IC BFR TTL LS NON-INV OCTL | 27014 | DM81LS97N |
| A2A9U21 | 1820-1759 | 9 | | IC BFR TTL LS NON-INV OCTL | 27014 | DM81LS97N |
| A2A9U22 | 1820-2483 | 8 | 1 | IC RCVR TTL LS BUS OCTL | 01295 | SN75161N |
| A2A9XU10 | 1200-0654 | 7 | | SOCKET-IC 40-CONT DIP DIP-SLDR | 28480 | 1200-0654 |
| A2A10 | 08673-60109 | 1 | 1 | RAM BOARD ASSY | 28480 | 08673-60109 |
| A2A10C1 | 0180-0116 | 1 | | CAPACITOR-FXD 6.8UF+-10% 35VDC TA | 56289 | 150D685X9035B2 |
| A2A10C2 | 0180-0116 | 1 | | CAPACITOR-FXD 6.8UF+-10% 35VDC TA | 56289 | 150D685X9035B2 |
| A2A10C3 | 0180-0116 | 1 | | CAPACITOR-FXD 6.8UF+-10% 35VDC TA | 56289 | 150D685X9035B2 |
| A2A10C4 | 0160-3466 | 8 | | CAPACITOR-FXD 100PF +-10% 1KVDC CER | 28480 | 0160-3466 |
| A2A10C5 | 0180-0116 | 1 | | CAPACITOR-FXD 6.8UF+-10% 35VDC TA | 56289 | 150D685X9035B2 |
| A2A10CR1 | 1901-0376 | 6 | 2 | DIODE-GEN PRP 35V 50MA DO-35 | 28480 | 1901-0376 |
| A2A10CR2 | 1901-0376 | 6 | | DIODE-GEN PRP 35V 50MA DO-35 | 28480 | 1901-0376 |
| A2A10L1 | 9100-3922 | 4 | | INDUCTOR-FIXED 120-1300 HZ | 28480 | 9100-3922 |
| A2A10MP1 | 1480-0073 | 6 | | PIN-ROLL .062-IN-DIA .25-IN-LG BE-CU | 28480 | 1480-0073 |
| A2A10R1 | 0757-0465 | 6 | | RESISTOR 100K 1% .125W F TC=0+-100 | 24546 | C4-1/8-T0-1003-F |
| A2A10R2 | 0698-8827 | 4 | 1 | RESISTOR 1M 1% .125W F TC=0+-100 | 28480 | 0698-8827 |
| A2A10S1 | 3101-2135 | 5 | 1 | SWITCH-RKR DIP-RKR-ASSY DPDT .05A 30VDC | 28480 | 3101-2135 |
| A2A10U1 | 1820-1197 | 9 | | IC GATE TTL LS NAND QUAD 2-INP | 01295 | SN74LS00N |
| A2A10U2 | 1820-1206 | 1 | 1 | IC GATE TTL LS NOR TPL 3-INP | 01295 | SN74LS27N |
| A2A10U3 | 1820-1730 | 6 | 1 | IC FF TTL LS D-TYPE POS-EDGE-TRIG COM | 01295 | SN74LS273N |
| A2A10U4 | 1820-1759 | 9 | | IC BFR TTL LS NON-INV OCTL | 27014 | DM81LS97N |
| A2A10U5 | 08673-80001 | 4 | 1 | EPROM | 28480 | 08673-80001 |

See introduction to this section for ordering information
*Indicates factory selected value
†Backdating information in Section VII



www.valuetronics.com

A2

## Table 6-3. Replaceable Parts

| Reference Designation | HP Part Number | C D | Qty | Description | Mfr Code | Mfr Part Number |
|---|---|---|---|---|---|---|
| A2A10U6 | 1818-1788 | 5 | 1 | IC CMOS 16384 (16K) STAT RAM 150-NS 3-S | S0545 | UPD446C-1(PER HP DWG) |
| A2A10U7 | 1820-1216 | 3 | | IC DCDR TTL LS 3-TO-8-LINE 3-INP | 01295 | SN74LS138N |
| A2A10U8 | 1820-2075 | 4 | 1 | IC TRANSCEIVER TTL LS BUS OCTL | 28480 | 1820-2075 |
| A2A10XU8 | 1200-0541 | 1 | | SOCKET-IC 24-CONT DIP DIP-SLDR | 28480 | 1200-0541 |
| A2A11 | 08673-60019 | 2 | 1 | ROM BD ASSY | 28480 | 08673-60019 |
| A2A11C1 | 0180-0116 | 1 | | CAPACITOR-FXD 6.8UF+-10% 35VDC TA | 56289 | 150D685X9035B2 |
| A2A11C2 | 0180-0116 | 1 | | CAPACITOR-FXD 6.8UF+-10% 35VDC TA | 56289 | 150D685X9035B2 |
| A2A11C3 | 0180-0116 | 1 | | CAPACITOR-FXD 6.8UF+-10% 35VDC TA | 56289 | 150D685X9035B2 |
| A2A11C4 | 0180-0116 | 1 | | CAPACITOR-FXD 6.8UF+-10% 35VDC TA | 56289 | 150D685X9035B2 |
| A2A11J1 | 1251-5652 | 2 | 1 | CONNECTOR 40-PIN M POST TYPE | 28480 | 1251-5652 |
| A2A11L1 | 9100-3922 | 4 | | INDUCTOR-FIXED 120-1300 HZ | 28480 | 9100-3922 |
| A2A11R1 | 1810-0280 | 8 | | NETWORK-RES 10-SIP10.0K OHM X 9 | 01121 | 210A103 |
| A2A11R2 | 1810-0280 | 8 | | NETWORK-RES 10-SIP10.0K OHM X 9 | 01121 | 210A103 |
| A2A11R3 | 1810-0280 | 8 | | NETWORK-RES 10-SIP10.0K OHM X 9 | 01121 | 210A103 |
| A2A11U1 | 1820-1759 | 9 | | IC BFR TTL LS NON-INV OCTL | 27014 | DM81LS97N |
| A2A11U2 | 1820-1759 | 9 | | IC BFR TTL LS NON-INV OCTL | 27014 | DM81LS97N |
| A2A11U3 | 1820-1208 | 3 | | IC GATE TTL LS OR QUAD 2-INP | 01295 | SN74LS32N |
| A2A11U4 | 1820-2081 | 2 | | IC NMOS | 04713 | MC68A21P |
| A2A11U5 | 08673-80031 | 0 | 1 | EPROM | 28480 | 08673-80031 |
| A2A11U6 | 08673-80038 | 7 | 1 | EPROM | 28480 | 08673-80038 |
| A2A11U7 | 08673-80039 | 8 | 1 | EPROM | 28480 | 08673-80039 |
| A2A11U8 | 08673-80040 | 1 | 1 | EPROM | 28480 | 08673-80040 |
| A2A11U9 | 1820-1759 | 9 | | IC BFR TTL LS NON-INV OCTL | 27014 | DM81LS97N |
| A2A11U10 | 1820-1759 | 9 | | IC BFR TTL LS NON-INV OCTL | 27014 | DM81LS97N |
| A2A11U11 | 1820-1197 | 9 | | IC GATE TTL LS NAND QUAD 2-INP | 01295 | SN74LS00N |
| A2A11U12 | 1820-1759 | 9 | | IC BFR TTL LS NON-INV OCTL | 27014 | DM81LS97N |
| A2A11U13 | 1820-1759 | 9 | | IC BFR TTL LS NON-INV OCTL | 27014 | DM81LS97N |
| A2A11XU5 | 1200-0567 | 1 | 3 | SOCKET-IC 28-CONT DIP DIP-SLDR | 28480 | 1200-0567 |
| A2A11XU6 | 1200-0567 | 1 | | SOCKET-IC 28-CONT DIP DIP-SLDR | 28480 | 1200-0567 |
| A2A11XU7 | 1200-0567 | 1 | | SOCKET-IC 28-CONT DIP DIP-SLDR | 28480 | 1200-0567 |
| A2A11XU8A | 1200-0807 | 0 | 1 | SOCKET-IC 16-CONT DIP DIP-SLDR | 28480 | 1200-0807 |
| A2A11XU8B | 1200-0796 | 8 | 1 | SOCKET-IC 8-CONT DIP DIP-SLDR | 28480 | 1200-0796 |
| A2A12 | | | | NOT ASSIGNED | | |
| A2A13 | 08673-60108 | 8 | 1 | MOTHERBOARD ASSEMBLY | 28480 | 08673-60108 |
| A2A13C1 | 0160-3879 | 7 | | CAPACITOR-FXD .01UF +-20% 100VDC CER | 28480 | 0160-3879 |
| A2A13C2 | 0160-3879 | 7 | | CAPACITOR-FXD .01UF +-20% 100VDC CER | 28480 | 0160-3879 |
| A2A13C3 | 0160-3877 | 5 | 16 | CAPACITOR-FXD 100PF +-20% 200VDC CER | 28480 | 0160-3877 |
| A2A13C4 | 0160-3877 | 5 | | CAPACITOR-FXD 100PF +-20% 200VDC CER | 28480 | 0160-3877 |
| A2A13C5 | 0160-3877 | 5 | | CAPACITOR-FXD 100PF +-20% 200VDC CER | 28480 | 0160-3877 |
| A2A13C6 | 0160-3877 | 5 | | CAPACITOR-FXD 100PF +-20% 200VDC CER | 28480 | 0160-3877 |
| A2A13C7 | 0160-3877 | 5 | | CAPACITOR-FXD 100PF +-20% 200VDC CER | 28480 | 0160-3877 |
| A2A13C8 | 0160-3877 | 5 | | CAPACITOR-FXD 100PF +-20% 200VDC CER | 28480 | 0160-3877 |
| A2A13C9 | 0160-3877 | 5 | | CAPACITOR-FXD 100PF +-20% 200VDC CER | 28480 | 0160-3877 |
| A2A13C10 | 0160-3877 | 5 | | CAPACITOR-FXD 100PF +-20% 200VDC CER | 28480 | 0160-3877 |
| A2A13C11 | 0160-3877 | 5 | | CAPACITOR-FXD 100PF +-20% 200VDC CER | 28480 | 0160-3877 |
| A2A13C12 | 0160-3877 | 5 | | CAPACITOR-FXD 100PF +-20% 200VDC CER | 28480 | 0160-3877 |
| A2A13C13 | 0160-3877 | 5 | | CAPACITOR-FXD 100PF +-20% 200VDC CER | 28480 | 0160-3877 |
| A2A13C14 | 0160-3877 | 5 | | CAPACITOR-FXD 100PF +-20% 200VDC CER | 28480 | 0160-3877 |
| A2A13C15 | 0160-3877 | 5 | | CAPACITOR-FXD 100PF +-20% 200VDC CER | 28480 | 0160-3877 |
| A2A13C16 | 0160-3877 | 5 | | CAPACITOR-FXD 100PF +-20% 200VDC CER | 28480 | 0160-3877 |
| A2A13C17 | 0160-3877 | 5 | | CAPACITOR-FXD 100PF +-20% 200VDC CER | 28480 | 0160-3877 |
| A2A13C18 | 0160-3877 | 5 | | CAPACITOR-FXD 100PF +-20% 200VDC CER | 28480 | 0160-3877 |
| A2A13J1 | 1250-1255 | 1 | 1 | CONNECTOR-RF SMB M PC 50-OHM | 28480 | 1250-1255 |
| A2A13J2 | 1251-5722 | 7 | 1 | CONNECTOR 50-PIN M POST TYPE | 28480 | 1251-5722 |
| A2A13J3 | 1251-5721 | 6 | 1 | CONNECTOR 40-PIN M POST TYPE | 28480 | 1251-5721 |
| A2A13J4 | 1251-5720 | 5 | 1 | CONNECTOR 34-PIN M POST TYPE | 28480 | 1251-5720 |
| A2A13J5 | 1251-5649 | 7 | 1 | CONNECTOR 20-PIN M POST TYPE | 28480 | 1251-5649 |
| A2A13MP1 | 0380-0817 | 3 | 2 | SPACER-RVT-ON .095-IN-LG .152-IN-ID | 00000 | ORDER BY DESCRIPTION |
| A2A13MP2 | 1251-0600 | 0 | | CONNECTOR-SGL CONT PIN 1.14-MM-BSC-SZ SQ | 28480 | 1251-0600 |

See introduction to this section for ordering information
*Indicates factory selected value
+Backdating information in Section VII



www.valuetronics.com

A2

Table 6-3. Replaceable Parts

| Reference Designation | HP Part Number | C D | Qty | Description | Mfr Code | Mfr Part Number |
|---|---|---|---|---|---|---|
| A2A13R1 | 0757-1000 | 7 | 1 | RESISTOR 51.1 1% .5W F TC=0+-100 | 28480 | 0757-1000 |
| A2A13W1 | 08673-20070 | 1 | 1 | CABLE-SEMI RIGID | 28480 | 08673-20070 |
| A2A13XA1A | 1251-2026 | 8 | 12 | CONNECTOR-PC EDGE 18-CONT/ROW 2-ROWS | 28480 | 1251-2026 |
| A2A13XA1B | 1251-2026 | 8 | | CONNECTOR-PC EDGE 18-CONT/ROW 2-ROWS | 28480 | 1251-2026 |
| A2A13XA2 | 1251-1365 | 6 | 1 | CONNECTOR-PC EDGE 22-CONT/ROW 2-ROWS | 28480 | 1251-1365 |
| A2A13XA3 | 1251-2026 | 8 | | CONNECTOR-PC EDGE 18-CONT/ROW 2-ROWS | 28480 | 1251-2026 |
| A2A13XA4 | 1251-2026 | 8 | | CONNECTOR-PC EDGE 18-CONT/ROW 2-ROWS | 28480 | 1251-2026 |
| A2A13XA5 | 1251-2026 | 8 | | CONNECTOR-PC EDGE 18-CONT/ROW 2-ROWS | 28480 | 1251-2026 |
| A2A13XA6 | | | | NOT ASSIGNED | | |
| A2A13XA6 | | | | NOT ASSIGNED | | |
| A2A13XA7A | 1251-2026 | 8 | | CONNECTOR-PC EDGE 18-CONT/ROW 2-ROWS | 28480 | 1251-2026 |
| A2A13XA7B | 1251-2026 | 8 | | CONNECTOR-PC EDGE 18-CONT/ROW 2-ROWS | 28480 | 1251-2026 |
| A2A13XA7C | 1251-2035 | 9 | 6 | CONNECTOR-PC EDGE 15-CONT/ROW 2-ROWS | 28480 | 1251-2035 |
| A2A13XA8B | 1251-2026 | 8 | | CONNECTOR-PC EDGE 18-CONT/ROW 2-ROWS | 28480 | 1251-2026 |
| A2A13XA8C | 1251-2035 | 9 | | CONNECTOR-PC EDGE 15-CONT/ROW 2-ROWS | 28480 | 1251-2035 |
| A2A13XA9A | 1251-2026 | 8 | | CONNECTOR-PC EDGE 18-CONT/ROW 2-ROWS | 28480 | 1251-2026 |
| A2A13XA9B | 1251-2026 | 8 | | CONNECTOR-PC EDGE 18-CONT/ROW 2-ROWS | 28480 | 1251-2026 |
| A2A13XA9C | 1251-2035 | 9 | | CONNECTOR-PC EDGE 15-CONT/ROW 2-ROWS | 28480 | 1251-2035 |
| A2A13XA10B | 1251-2026 | 8 | | CONNECTOR-PC EDGE 18-CONT/ROW 2-ROWS | 28480 | 1251-2026 |
| A2A13XA10C | 1251-2035 | 9 | | CONNECTOR-PC EDGE 15-CONT/ROW 2-ROWS | 28480 | 1251-2035 |
| A2A13XA11B | 1251-2026 | 8 | | CONNECTOR-PC EDGE 18-CONT/ROW 2-ROWS | 28480 | 1251-2026 |
| A2A13XA11C | 1251-2035 | 9 | | CONNECTOR-PC EDGE 15-CONT/ROW 2-ROWS | 28480 | 1251-2035 |
| A2A14 | 08673-60013 | 6 | 1 | REAR INTERCONNECT BOARD ASSEMBLY | 28480 | 08673-60013 |
| A2A14J1 | 1251-3025 | 9 | 1 | CONNECTOR 34-PIN M RECTANGULAR | 28480 | 1251-3025 |
| A2A14MP1 | 0380-0339 | 4 | 1 | STANDOFF-RVT-ON .25-IN-LG 4-40THD | 00000 | ORDER BY DESCRIPTION |
| A2A15 | 08673-60010 | 3 | 1 | HP-IB CONNECTOR BOARD ASSEMBLY | 28480 | 08673-60010 |
| A2A15J1 | 1251-3283 | 1 | 1 | CONNECTOR 24-PIN F MICRORIBBON | 28480 | 1251-3283 |
| A2A15MP1 | 0380-0643 | 3 | 2 | STANDOFF-HEX .255-IN-LG 6-32THD | 00000 | ORDER BY DESCRIPTION |
| A2A15MP2 | 2190-0017 | 4 | 2 | WASHER-LK HLCL NO. 8 .168-IN-ID | 28480 | 2190-0017 |
| A2A15MP3 | 2190-0019 | 6 | 2 | WASHER-LK HLCL NO. 4 .115-IN-ID | 28480 | 2190-0019 |
| A2A15MP4 | 2200-0109 | 8 | 2 | SCREW-MACH 4-40 .438-IN-LG PAN-HD-POZI | 00000 | ORDER BY DESCRIPTION |
| A2A15MP5 | 2260-0002 | 6 | 2 | NUT-HEX-DBL-CHAM 4-40-THD .062-IN-THK | 28480 | 2260-0002 |
| A2A15MP6 | 3050-0139 | 6 | 2 | WASHER-FL MTLC NO. 8 .172-IN-ID | 28480 | 3050-0139 |
| A2A15MP7 | 1530-1098 | 4 | 1 | CLEVIS 0.070-IN W SLT: 0.454-IN PIN CTR | 00000 | ORDER BY DESCRIPTION |
| A2A15XA1 | 1251-3403 | 7 | 1 | CONNECTOR-PC EDGE 10-CONT/ROW 2-ROWS | 28480 | 1251-3403 |
| A2BT1 | 08672-60092 | 0 | 1 | BATTERY PACK ASSEMBLY | 28480 | 08672-60092 |
| A2J1 | | | | NOT ASSIGNED | | |
| A2J2 | 1250-0083 | 1 | 5 | CONNECTOR-RF BNC FEM SGL-HOLE-FR 50-OHM | 28480 | 1250-0083 |
| A2J3 | 1250-0083 | 1 | | CONNECTOR-RF BNC FEM SGL-HOLE-FR 50-OHM | 28480 | 1250-0083 |
| A2J4 | 1250-0083 | 1 | | CONNECTOR-RF BNC FEM SGL-HOLE-FR 50-OHM | 28480 | 1250-0083 |
| A2J5 | 1250-0083 | 1 | | CONNECTOR-RF BNC FEM SGL-HOLE-FR 50-OHM | 28480 | 1250-0083 |
| A2J6 | 1251-0143 | 6 | 1 | CONNECTOR 14-PIN F MICRO RIBBON | 28480 | 1251-0143 |
| A2J7 | 1250-0083 | 1 | | CONNECTOR-RF BNC FEM SGL-HOLE-FR 50-OHM | 28480 | 1250-0083 |
| A2MP1 | 0624-0268 | 6 | 48 | SCREW-TPG 4-24 .375-IN-LG PAN-HD-POZI | 00000 | ORDER BY DESCRIPTION |
| A2MP2 | | | | NOT ASSIGNED | | |
| A2MP3 | 2190-0401 | 0 | 14 | WASHER-FL NM NO. 4 .12-IN-ID .312-IN-OD | 28480 | 2190-0401 |
| A2MP4 | 2200-0103 | 2 | | SCREW-MACH 4-40 .25-IN-LG PAN-HD-POZI | 28480 | 2200-0103 |
| A2MP5 | 2360-0115 | 4 | 2 | SCREW-MACH 6-32 .312-IN-LG PAN-HD-POZI | 00000 | ORDER BY DESCRIPTION |
| A2MP6 | 2360-0333 | 8 | 13 | SCREW-MACH 6-32 .25-IN-LG 100 DEG | 28480 | 2360-0333 |
| A2MP7 | 0624-0097 | 9 | 2 | SCREW-TPG 4-40 .188-IN-LG PAN-HD-POZI | 28480 | 0624-0097 |
| A2MP8 | | | | NOT ASSIGNED | | |
| A2MP9 | | | | NOT ASSIGNED | | |
| A2MP10 | 3050-0010 | 2 | 2 | WASHER-FL MTLC NO. 6 .147-IN-ID | 28480 | 3050-0010 |
| A2MP11 | 7100-1266 | 3 | 1 | CAN-SQUARE | 28480 | 7100-1266 |
| A2MP12 | 85660-00054 | 6 | 1 | CLAMP BATTERY | 28480 | 85660-00054 |
| A2MP13 | 08672-20120 | 1 | 12 | STEP WASHER | 28480 | 08672-20120 |
| A2MP14 | 08672-20142 | 7 | 1 | AMPLIFIER HOUSING | 28480 | 08672-20142 |
| A2MP15 | 08672-20146 | 1 | 1 | MOUNTING BLOCK | 28480 | 08672-20146 |

See introduction to this section for ordering information
*Indicates factory selected value
†Backdating information in Section VII



www.valuetronics.com

A2

Table 6-3. Replaceable Parts

| Reference Designation | HP Part Number | C D | Qty | Description | Mfr Code | Mfr Part Number |
|---|---|---|---|---|---|---|
| A2MP16 | 08672-60029 | 3 | 1 | BATTERY HOLDER ASSEMBLY | 28480 | 08672-60029 |
| A2MP17 | 08673-00003 | 8 | 1 | SUPPORT-FRONT DCU | 28480 | 08673-00003 |
| A2MP18 | 08673-00005 | 0 | 1 | GUSSET-RIGHT DCU | 28480 | 08673-00005 |
| A2MP19 | 08673-00006 | 1 | 1 | GUSSET-CENTER DCU | 28480 | 08673-00006 |
| A2MP20 | 08673-00007 | 2 | 1 | GUSSET-LEFT DCU | 28480 | 08673-00007 |
| A2MP21 | | | | NOT ASSIGNED | | |
| A2MP22 | 0520-0129 | 8 | 2 | SCREW-MACH 2-56 .312-IN-LG PAN-HD-POZI | 00000 | ORDER BY DESCRIPTION |
| A2MP23 | 0610-0001 | 6 | 2 | NUT-HEX-DBL-CHAM 2-56-THD .062-IN-THK | 00000 | ORDER BY DESCRIPTION |
| A2MP24 | 1400-0249 | 0 | 3 | CABLE TIE .062-.625-DIA .091-WD NYL | 06383 | PLT1M-8 |
| A2MP25 | 2190-0016 | 3 | | WASHER-LK INTL T 3/8 IN .377-IN-ID | 28480 | 2190-0016 |
| A2MP26 | 2190-0045 | 8 | 2 | WASHER-LK HLCL NO. 2 .088-IN-ID | 28480 | 2190-0045 |
| A2MP27 | 2200-0103 | 2 | | SCREW-MACH 4-40 .25-IN-LG PAN-HD-POZI | 28480 | 2200-0103 |
| A2MP28 | 2950-0001 | 8 | 5 | NUT-HEX-DBL-CHAM 3/8-32-THD .094-IN-THK | 00000 | ORDER BY DESCRIPTION |
| A2MP29 | 08673-00008 | 3 | 1 | PANEL-REAR DCU | 28480 | 08673-00008 |
| A2MP30 | | | | NOT ASSIGNED | | |
| A2MP31 | 2510-0195 | 8 | 4 | SCREW-MACH 8-32 .375-IN-LG 100 DEG | 28480 | 2510-0195 |
| A2MP32 | 2360-0229 | 1 | 1 | SCREW-MACH 6-32 .562-IN-LG PAN-HD-POZI | 00000 | ORDER BY DESCRIPTION |
| A2MP33 | 2190-0018 | 5 | 1 | WASHER-LK HLCL NO. 6 .141-IN-ID | 28480 | 2190-0018 |
| A2W1 | 08672-60030 | 6 | 1 | CABLE ASSEMBLY-VCO OUTPUT | 28480 | 08672-60030 |
| A2W2 | 08673-60024 | 9 | 1 | CABLE ASSEMBLY-34 CONDUCTOR S | 28480 | 08673-60024 |

See introduction to this section for ordering information
*Indicates factory selected value
†Backdating information in Section VII



www.valuetronics.com

Table 6-3. Replaceable Parts

| Reference Designation | HP Part Number | C D | Qty | Description | Mfr Code | Mfr Part Number |
|---|---|---|---|---|---|---|
| A3A1 | 08673-60113 | 7 | 1 | RECTIFIER ASSEMBLY | 28480 | 08673-60113 |
| A3A1C1 | 0160-2055 | 9 | 51 | CAPACITOR-FXD .01UF +80-20% 100VDC CER | 28480 | 0160-2055 |
| A3A1C2 | 0160-2055 | 9 | | CAPACITOR-FXD .01UF +80-20% 100VDC CER | 28480 | 0160-2055 |
| A3A1C3 | 0160-2055 | 9 | | CAPACITOR-FXD .01UF +80-20% 100VDC CER | 28480 | 0160-2055 |
| A3A1C4 | 0160-4084 | 8 | 10 | CAPACITOR-FXD .1UF +-20% 50VDC CER | 28480 | 0160-4084 |
| A3A1C5 | 0180-0230 | 0 | 1 | CAPACITOR-FXD 1UF+-20% 50VDC TA | 56289 | 150D105X0050A2 |
| A3A1C6 | 0160-4084 | 8 | | CAPACITOR-FXD .1UF +-20% 50VDC CER | 28480 | 0160-4084 |
| A3A1C7 | 0180-0197 | 8 | 18 | CAPACITOR-FXD 2.2UF+-10% 20VDC TA | 56289 | 150D225X9020A2 |
| A3A1C8 | 0160-4005 | 3 | 3 | CAPACITOR-FXD 1UF +-20% 100VDC CER | 28480 | 0160-4005 |
| A3A1C9 | 0160-4005 | 3 | | CAPACITOR-FXD 1UF +-20% 100VDC CER | 28480 | 0160-4005 |
| A3A1C10 | | | | NOT ASSIGNED | | |
| A3A1C11 | | | | NOT ASSIGNED | | |
| A3A1C12 | 0160-4005 | 3 | | CAPACITOR-FXD 1UF +-20% 100VDC CER | 28480 | 0160-4005 |
| A3A1CR1 | 1901-0662 | 3 | 16 | DIODE-PWR RECT 100V 6A | 04713 | MR751 |
| A3A1CR2 | 1901-0662 | 3 | | DIODE-PWR RECT 100V 6A | 04713 | MR751 |
| A3A1CR3 | 1901-0662 | 3 | | DIODE-PWR RECT 100V 6A | 04713 | MR751 |
| A3A1CR4 | 1901-0662 | 3 | | DIODE-PWR RECT 100V 6A | 04713 | MR751 |
| A3A1CR5 | 1901-0662 | 3 | | DIODE-PWR RECT 100V 6A | 04713 | MR751 |
| A3A1CR6 | 1901-0662 | 3 | | DIODE-PWR RECT 100V 6A | 04713 | MR751 |
| A3A1CR7 | 1901-0662 | 3 | | DIODE-PWR RECT 100V 6A | 04713 | MR751 |
| A3A1CR8 | 1901-0662 | 3 | | DIODE-PWR RECT 100V 6A | 04713 | MR751 |
| A3A1CR9 | 1901-0662 | 3 | | DIODE-PWR RECT 100V 6A | 04713 | MR751 |
| A3A1CR10 | 1901-0662 | 3 | | DIODE-PWR RECT 100V 6A | 04713 | MR751 |
| A3A1CR11 | 1901-0662 | 3 | | DIODE-PWR RECT 100V 6A | 04713 | MR751 |
| A3A1CR12 | 1901-0662 | 3 | | DIODE-PWR RECT 100V 6A | 04713 | MR751 |
| A3A1CR13 | 1901-0765 | 7 | 2 | DIODE-PWR RECT 1N5812 50V 20A 35NS DO-4 | 12969 | 1N5812 |
| A3A1CR14 | 1901-0765 | 7 | | DIODE-PWR RECT 1N5812 50V 20A 35NS DO-4 | 12969 | 1N5812 |
| A3A1CR15 | 1990-0487 | 7 | 4 | LED-LAMP LUM-INT=1MCD IF=20MA-MAX BVR=5V | 28480 | 5082-4584 |
| A3A1CR16 | 1884-0018 | 5 | 6 | THYRISTOR-SCR 2N4186 VRRM=200 | 04713 | 2N4186 |
| A3A1CR17 | 1901-0662 | 3 | | DIODE-PWR RECT 100V 6A | 04713 | MR751 |
| A3A1CR18 | 1884-0018 | 5 | | THYRISTOR-SCR 2N4186 VRRM=200 | 04713 | 2N4186 |
| A3A1DS1 | 1990-0487 | 7 | | LED-LAMP LUM-INT=1MCD IF=20MA-MAX BVR=5V | 28480 | 5082-4584 |
| A3A1F1 | 2110-0001 | 8 | 1 | FUSE 1A 250V NTD 1.25X.25 UL | 75915 | 312001 |
| A3A1MP1 | | | | NOT ASSIGNED | | |
| A3A1MP2 | 0590-0526 | 6 | 2 | THREADED INSERT-NUT 4-40 .065-IN-LG SST | 28480 | 0590-0526 |
| A3A1MP3 | 1200-0081 | 4 | 25 | INSULATOR-FLG-BSHG NYLON | 28480 | 1200-0081 |
| A3A1MP4 | 1251-2313 | 6 | 2 | CONNECTOR-SGL CONT SKT .04-IN-BSC-SZ RND | 28480 | 1251-2313 |
| A3A1MP5 | 2740-0003 | 5 | 2 | NUT-HEX-W/LKWR 10-32-THD .125-IN-THK | 00000 | ORDER BY DESCRIPTION |
| A3A1MP6 | 1251-0600 | 0 | 51 | CONNECTOR-SGL CONT PIN 1.14-MM-BSC-SZ SQ | 28480 | 1251-0600 |
| A3A1MP7 | 5000-9043 | 6 | 5 | PIN-P.C. BOARD EXTRACTOR | 28480 | 5000-9043 |
| A3A1MP8 | 5040-6843 | 2 | 5 | BOARD EXTRACTOR | 28480 | 5040-6843 |
| A3A1MP9 | 86701-00018 | 4 | 1 | HEAT SINK | 28480 | 86701-00018 |
| A3A1MP10 | 2740-0003 | 5 | | NUT-HEX-W/LKWR 10-32-THD .125-IN-THK | 00000 | ORDER BY DESCRIPTION |
| A3A1MP11 | 2200-0107 | 6 | 6 | SCREW-MACH 4-40 .375-IN-LG PAN-HD-POZI | 00000 | ORDER BY DESCRIPTION |
| A3A1R1 | 0698-0083 | 8 | | RESISTOR 1.96K 1% .125W F TC=0+-100 | 24546 | C4-1/8-T0-1961-F |
| A3A1R2 | 2100-3123 | 0 | 1 | RESISTOR-TRMR 500 10% C SIDE-ADJ 17-TRN | 02111 | 43P501 |
| A3A1R3 | 0757-0346 | 2 | 31 | RESISTOR 10 1% .125W F TC=0+-100 | 24546 | C4-1/8-T0-10R0-F |
| A3A1R4 | 0698-3444 | 1 | 8 | RESISTOR 316 1% .125W F TC=0+-100 | 24546 | C4-1/8-T0-316R-F |
| A3A1R5 | 0698-3447 | 4 | 5 | RESISTOR 422 1% .125W F TC=0+-100 | 24546 | C4-1/8-T0-422R-F |
| A3A1U1 | 1826-0126 | 4 | 1 | IC 7818 V RGLTR TO-3 | 04713 | MC7818CK |
| A3A1VR1 | 1902-3263 | 8 | 1 | DIODE-ZNR 24.9V 2% DO-35 PD=.4W | 28480 | 1902-3263 |
| A3A1VR2 | 1902-3404 | 9 | 2 | DIODE-ZNR 82.5V 5% DO-7 PD=.4W TC=+.082% | 28480 | 1902-3404 |
| A3A1XF1 | 2110-0269 | 0 | 6 | FUSEHOLDER-CLIP TYPE.25D-FUSE | 28480 | 2110-0269 |
| A3A1A1 | 86701-60021 | 6 | 1 | REFERENCE PHASE DETECTOR ASSEMBLY | 28480 | 86701-60021 |
| A3A1A1C1 | 0180-0197 | 8 | | CAPACITOR-FXD 2.2UF+-10% 20VDC TA | 56289 | 150D225X9020A2 |
| A3A1A1C2 | 0180-0197 | 8 | | CAPACITOR-FXD 2.2UF+-10% 20VDC TA | 56289 | 150D225X9020A2 |
| A3A1A1C3 | 0180-1746 | 5 | 8 | CAPACITOR-FXD 15UF+-10% 20VDC TA | 56289 | 150D156X9020B2 |
| A3A1A1C4 | 0160-3879 | 7 | 31 | CAPACITOR-FXD .01UF +-20% 100VDC CER | 28480 | 0160-3879 |
| A3A1A1C5 | 0140-0190 | 7 | 2 | CAPACITOR-FXD 39PF +-5% 300VDC MICA | 72136 | DM15E390J0300WV1CR |

A3

See introduction to this section for ordering information
*Indicates factory selected value
†Backdating information in Section VII



www.valuetronics.com

A3

Table 6-3. Replaceable Parts

| Reference Designation | HP Part Number | CD | Qty | Description | Mfr Code | Mfr Part Number |
|---|---|---|---|---|---|---|
| A3A1A1C6 | 0160-3879 | 7 | | CAPACITOR-FXD .01UF +-20% 100VDC CER | 28480 | 0160-3879 |
| A3A1A1C7 | 0160-2055 | 9 | | CAPACITOR-FXD .01UF +80-20% 100VDC CER | 28480 | 0160-2055 |
| A3A1A1C8 | 0180-1846 | 6 | 1 | CAPACITOR-FXD 2.2UF+-10% 35VDC TA | 56289 | 150D225X9035B2 |
| A3A1A1C9 | 0160-3879 | 7 | | CAPACITOR-FXD .01UF +-20% 100VDC CER | 28480 | 0160-3879 |
| A3A1A1C10 | 0160-2055 | 9 | | CAPACITOR-FXD .01UF +80-20% 100VDC CER | 28480 | 0160-2055 |
| A3A1A1C11 | 0180-0197 | 8 | | CAPACITOR-FXD 2.2UF+-10% 20VDC TA | 56289 | 150D225X9020A2 |
| A3A1A1C12 | 0160-2199 | 2 | 7 | CAPACITOR-FXD 30PF +-5% 300VDC MICA | 28480 | 0160-2199 |
| A3A1A1C13 | 0180-0197 | 8 | | CAPACITOR-FXD 2.2UF+-10% 20VDC TA | 56289 | 150D225X9020A2 |
| A3A1A1C14 | 0160-2204 | 0 | 6 | CAPACITOR-FXD 100PF +-5% 300VDC MICA | 28480 | 0160-2204 |
| A3A1A1C15 | 0180-0197 | 8 | | CAPACITOR-FXD 2.2UF+-10% 20VDC TA | 56289 | 150D225X9020A2 |
| A3A1A1C16 | 0160-2055 | 9 | | CAPACITOR-FXD .01UF +80-20% 100VDC CER | 28480 | 0160-2055 |
| A3A1A1C17 | 0160-2055 | 9 | | CAPACITOR-FXD .01UF +80-20% 100VDC CER | 28480 | 0160-2055 |
| A3A1A1C18 | 0160-2055 | 9 | | CAPACITOR-FXD .01UF +80-20% 100VDC CER | 28480 | 0160-2055 |
| A3A1A1C19 | 0160-2055 | 9 | | CAPACITOR-FXD .01UF +80-20% 100VDC CER | 28480 | 0160-2055 |
| A3A1A1C20 | 0160-2055 | 9 | | CAPACITOR-FXD .01UF +80-20% 100VDC CER | 28480 | 0160-2055 |
| A3A1A1C21 | 0160-2055 | 9 | | CAPACITOR-FXD .01UF +80-20% 100VDC CER | 28480 | 0160-2055 |
| A3A1A1C22 | 0160-2055 | 9 | | CAPACITOR-FXD .01UF +80-20% 100VDC CER | 28480 | 0160-2055 |
| A3A1A1C23 | 0180-0553 | 0 | 2 | CAPACITOR-FXD 22UF+-20% 25VDC TA | 28480 | 0180-0553 |
| A3A1A1C24 | 0160-2055 | 9 | | CAPACITOR-FXD .01UF +80-20% 100VDC CER | 28480 | 0160-2055 |
| A3A1A1C25 | 0160-2055 | 9 | | CAPACITOR-FXD .01UF +80-20% 100VDC CER | 28480 | 0160-2055 |
| A3A1A1C26 | 0160-2204 | 0 | | CAPACITOR-FXD 100PF +-5% 300VDC MICA | 28480 | 0160-2204 |
| A3A1A1C27 | 0140-0193 | 0 | 6 | CAPACITOR-FXD 82PF +-5% 300VDC MICA | 72136 | DM15E820J0300WV1CR |
| A3A1A1C28 | 0180-0553 | 0 | | CAPACITOR-FXD 22UF+-20% 25VDC TA | 28480 | 0180-0553 |
| A3A1A1C29 | 0160-2055 | 9 | | CAPACITOR-FXD .01UF +80-20% 100VDC CER | 28480 | 0160-2055 |
| A3A1A1C30 | 0140-0193 | 0 | | CAPACITOR-FXD 82PF +-5% 300VDC MICA | 72136 | DM15E820J0300WV1CR |
| A3A1A1C31 | 0180-1746 | 5 | | CAPACITOR-FXD 15UF+-10% 20VDC TA | 56289 | 150D156X9020B2 |
| A3A1A1C32 | 0170-0066 | 9 | 1 | CAPACITOR-FXD .027UF +-10% 200VDC POLYE | 28480 | 0170-0066 |
| A3A1A1C33 | 0160-2055 | 9 | | CAPACITOR-FXD .01UF +80-20% 100VDC CER | 28480 | 0160-2055 |
| A3A1A1C34 | 0160-2055 | 9 | | CAPACITOR-FXD .01UF +80-20% 100VDC CER | 28480 | 0160-2055 |
| A3A1A1C35 | 0140-0193 | 0 | | CAPACITOR-FXD 82PF +-5% 300VDC MICA | 72136 | DM15E820J0300WV1CR |
| A3A1A1C36 | 0160-2055 | 9 | | CAPACITOR-FXD .01UF +80-20% 100VDC CER | 28480 | 0160-2055 |
| A3A1A1C37 | 0160-2055 | 9 | | CAPACITOR-FXD .01UF +80-20% 100VDC CER | 28480 | 0160-2055 |
| A3A1A1C38 | 0140-0193 | 0 | | CAPACITOR-FXD 82PF +-5% 300VDC MICA | 72136 | DM15E820J0300WV1CR |
| A3A1A1C39 | 0160-3454 | 4 | 25 | CAPACITOR-FXD 220PF +-10% 1KVDC CER | 28480 | 0160-3454 |
| A3A1A1C40 | 0180-1746 | 5 | | CAPACITOR-FXD 15UF+-10% 20VDC TA | 56289 | 150D156X9020B2 |
| A3A1A1C41 | 0160-2055 | 9 | | CAPACITOR-FXD .01UF +80-20% 100VDC CER | 28480 | 0160-2055 |
| A3A1A1C42 | 0160-2055 | 9 | | CAPACITOR-FXD .01UF +80-20% 100VDC CER | 28480 | 0160-2055 |
| A3A1A1C43 | 0160-2206 | 2 | 1 | CAPACITOR-FXD 160PF +-5% 300VDC MICA | 28480 | 0160-2206 |
| A3A1A1C44 | 0160-2055 | 9 | | CAPACITOR-FXD .01UF +80-20% 100VDC CER | 28480 | 0160-2055 |
| A3A1A1C45 | 0160-2055 | 9 | | CAPACITOR-FXD .01UF +80-20% 100VDC CER | 28480 | 0160-2055 |
| A3A1A1C46 | 0140-0210 | 2 | 3 | CAPACITOR-FXD 270PF +-5% 300VDC MICA | 72136 | DM15F271J0300WV1CR |
| A3A1A1C47 | 0160-2055 | 9 | | CAPACITOR-FXD .01UF +80-20% 100VDC CER | 28480 | 0160-2055 |
| A3A1A1C48 | 0140-0210 | 2 | | CAPACITOR-FXD 270PF +-5% 300VDC MICA | 72136 | DM15F271J0300WV1CR |
| A3A1A1C49 | 0160-2201 | 7 | 1 | CAPACITOR-FXD 51PF +-5% 300VDC MICA | 28480 | 0160-2201 |
| A3A1A1C50 | 0160-2055 | 9 | | CAPACITOR-FXD .01UF +80-20% 100VDC CER | 28480 | 0160-2055 |
| A3A1A1C51 | 0140-0210 | 2 | | CAPACITOR-FXD 270PF +-5% 300VDC MICA | 72136 | DM15F271J0300WV1CR |
| A3A1A1C52 | 0160-2055 | 9 | | CAPACITOR-FXD .01UF +80-20% 100VDC CER | 28480 | 0160-2055 |
| A3A1A1C53 | 0160-2055 | 9 | | CAPACITOR-FXD .01UF +80-20% 100VDC CER | 28480 | 0160-2055 |
| A3A1A1C54 | 0180-0183 | 2 | 1 | CAPACITOR-FXD 10UF+75-10% 50VDC AL | 56289 | 30D1066050CB2 |
| A3A1A1C55 | 0180-1746 | 5 | | CAPACITOR-FXD 15UF+-10% 20VDC TA | 56289 | 150D156X9020B2 |
| A3A1A1C56 | 0180-0229 | 7 | 3 | CAPACITOR-FXD 33UF+-10% 10VDC TA | 56289 | 150D336X9010B2 |
| A3A1A1C57 | 0160-2204 | 0 | | CAPACITOR-FXD 100PF +-5% 300VDC MICA | 28480 | 0160-2204 |
| A3A1A1C58 | 0160-3879 | 7 | | CAPACITOR-FXD .01UF +-20% 100VDC CER | 28480 | 0160-3879 |
| A3A1A1C59 | 0160-3878 | 6 | 35 | CAPACITOR-FXD 1000PF +-20% 100VDC CER | 28480 | 0160-3878 |
| A3A1A1C60 | 0160-3879 | 7 | | CAPACITOR-FXD .01UF +-20% 100VDC CER | 28480 | 0160-3879 |
| A3A1A1C61 | 0160-3454 | 4 | | CAPACITOR-FXD 220PF +-10% 1KVDC CER | 28480 | 0160-3454 |
| A3A1A1C62 | 0160-3878 | 6 | | CAPACITOR-FXD 1000PF +-20% 100VDC CER | 28480 | 0160-3878 |
| A3A1A1CR1 | 1901-0518 | 8 | 6 | DIODE-SM SIG SCHOTTKY | 28480 | 1901-0518 |
| A3A1A1CR2 | 1901-0518 | 8 | | DIODE-SM SIG SCHOTTKY | 28480 | 1901-0518 |
| A3A1A1CR3 | 1901-0518 | 8 | | DIODE-SM SIG SCHOTTKY | 28480 | 1901-0518 |
| A3A1A1CR4 | 1901-0518 | 8 | | DIODE-SM SIG SCHOTTKY | 28480 | 1901-0518 |
| A3A1A1CR5 | 1901-0518 | 8 | | DIODE-SM SIG SCHOTTKY | 28480 | 1901-0518 |
| A3A1A1CR6 | 1901-0518 | 8 | | DIODE-SM SIG SCHOTTKY | 28480 | 1901-0518 |

See introduction to this section for ordering information
*Indicates factory selected value
†Backdating information in Section VII



www.valuetronics.com

Table 6-3. Replaceable Parts

| Reference Designation | HP Part Number | CD | Qty | Description | Mfr Code | Mfr Part Number |
|---|---|---|---|---|---|---|
| A3A1A1J1 | 1250-0544 | 9 | 8 | CONNECTOR-RF SM-SNP M SGL-HOLE-FR 50-OHM | 28480 | 1250-0544 |
| A3A1A1J3 | 1250-0544 | 9 | | CONNECTOR-RF SM-SNP M SGL-HOLE-FR 50-OHM | 28480 | 1250-0544 |
| A3A1A1J4 | 1250-0544 | 9 | | CONNECTOR-RF SM-SNP M SGL-HOLE-FR 50-OHM | 28480 | 1250-0544 |
| A3A1A1J5 | 1250-0544 | 9 | | CONNECTOR-RF SM-SNP M SGL-HOLE-FR 50-OHM | 28480 | 1250-0544 |
| A3A1A1J6 | 1250-0544 | 9 | | CONNECTOR-RF SM-SNP M SGL-HOLE-FR 50-OHM | 28480 | 1250-0544 |
| A3A1A1L1 | 9140-0238 | 3 | 2 | INDUCTOR RF-CH-MLD 82UH 5% .166DX.385LG | 28480 | 9140-0238 |
| A3A1A1L2 | 9140-0238 | 3 | | INDUCTOR RF-CH-MLD 82UH 5% .166DX.385LG | 28480 | 9140-0238 |
| A3A1A1L3 | 9140-0143 | 9 | 2 | INDUCTOR RF-CH-MLD 3.3UH 10% .105DX.26LG | 28480 | 9140-0143 |
| A3A1A1L4 | 9140-0143 | 9 | | INDUCTOR RF-CH-MLD 3.3UH 10% .105DX.26LG | 28480 | 9140-0143 |
| A3A1A1L5 | 9100-2261 | 2 | 1 | INDUCTOR RF-CH-MLD 2.7UH 10% .105DX.26LG | 28480 | 9100-2261 |
| A3A1A1L6 | 9140-0114 | 4 | 1 | INDUCTOR RF-CH-MLD 10UH 10% .168DX.385LG | 28480 | 9140-0114 |
| A3A1A1L7 | 9100-2255 | 4 | 4 | INDUCTOR RF-CH-MLD 470NH 10% .105DX.26LG | 28480 | 9100-2255 |
| A3A1A1L8 | 9100-0368 | 6 | 4 | INDUCTOR RF-CH-MLD 330NH 10% .105DX.26LG | 28480 | 9100-0368 |
| A3A1A1L9 | 9100-2257 | 6 | 3 | INDUCTOR RF-CH-MLD 820NH 10% .105DX.26LG | 28480 | 9100-2257 |
| A3A1A1L10 | 9100-2255 | 4 | | INDUCTOR RF-CH-MLD 470NH 10% .105DX.26LG | 28480 | 9100-2255 |
| A3A1A1L11 | 9100-2257 | 6 | | INDUCTOR RF-CH-MLD 820NH 10% .105DX.26LG | 28480 | 9100-2257 |
| A3A1A1L12 | 9100-2255 | 4 | | INDUCTOR RF-CH-MLD 470NH 10% .105DX.26LG | 28480 | 9100-2255 |
| A3A1A1L13 | 9100-2257 | 6 | | INDUCTOR RF-CH-MLD 820NH 10% .105DX.26LG | 28480 | 9100-2257 |
| A3A1A1L14 | 9100-2255 | 4 | | INDUCTOR RF-CH-MLD 470NH 10% .105DX.26LG | 28480 | 9100-2255 |
| A3A1A1L15 | 9100-2256 | 5 | 1 | INDUCTOR RF-CH-MLD 560NH 10% .105DX.26LG | 28480 | 9100-2256 |
| A3A1A1MP1 | 1205-0250 | 9 | 1 | THERMAL LINK SGL TO-5/TO-39-CS | 28480 | 1205-0250 |
| A3A1A1MP2 | 2190-0124 | 4 | 10 | WASHER-LK INTL T NO. 10 .195-IN-ID | 28480 | 2190-0124 |
| A3A1A1MP3 | 2200-0103 | 2 | 27 | SCREW-MACH 4-40 .25-IN-LG PAN-HD-POZI | 28480 | 2200-0103 |
| A3A1A1MP4 | 2950-0078 | 9 | 5 | NUT-HEX-DBL-CHAM 10-32-THD .087-IN-THK | 28480 | 2950-0078 |
| A3A1A1MP5 | 6040-0239 | 9 | 1 | LUBRICANT-GREASE SIL | 05820 | 120 |
| A3A1A1MP6 | 86701-20040 | 4 | 1 | COVER-P.C. (PHASE LOCK) | 28480 | 86701-20040 |
| A3A1A1MP7 | 86701-40001 | 9 | 12 | EXTRACTOR-P.C. BOARD | 28480 | 86701-40001 |
| A3A1A1MP8 | 2200-0139 | 4 | 18 | SCREW-MACH 4-40 .25-IN-LG PAN-HD-POZI | 28480 | 2200-0139 |
| A3A1A1MP9 | 2190-0019 | 6 | 41 | WASHER-LK HLCL NO. 4 .115-IN-ID | 28480 | 2190-0019 |
| A3A1A1Q1 | 1854-0019 | 3 | 3 | TRANSISTOR NPN SI TO-18 PD=360MW | 28480 | 1854-0019 |
| A3A1A1Q2 | 1854-0019 | 3 | | TRANSISTOR NPN SI TO-18 PD=360MW | 28480 | 1854-0019 |
| A3A1A1Q3 | 1854-0019 | 3 | | TRANSISTOR NPN SI TO-18 PD=360MW | 28480 | 1854-0019 |
| A3A1A1Q4 | 1855-0049 | 1 | 1 | TRANSISTOR-JFET DUAL N-CHAN D-MODE SI | 28480 | 1855-0049 |
| A3A1A1Q5 | 1853-0451 | 5 | 15 | TRANSISTOR PNP 2N3799 SI TO-18 PD=360MW | 01295 | 2N3799 |
| A3A1A1Q6 | 1853-0451 | 5 | | TRANSISTOR PNP 2N3799 SI TO-18 PD=360MW | 01295 | 2N3799 |
| A3A1A1Q7 | 1853-0034 | 0 | 1 | TRANSISTOR PNP SI TO-18 PD=360MW | 28480 | 1853-0034 |
| A3A1A1R1 | 0757-0399 | 5 | 3 | RESISTOR 82.5 1% .125W F TC=0+-100 | 24546 | C4-1/8-T0-82R5-F |
| A3A1A1R2 | 0757-0417 | 8 | 1 | RESISTOR 562 1% .125W F TC=0+-100 | 24546 | C4-1/8-T0-562R-F |
| A3A1A1R3 | 0757-0416 | 7 | 19 | RESISTOR 511 1% .125W F TC=0+-100 | 24546 | C4-1/8-T0-511R-F |
| A3A1A1R4 | 0757-0401 | 0 | 26 | RESISTOR 100 1% .125W F TC=0+-100 | 24546 | C4-1/8-T0-101-F |
| A3A1A1R5 | 0698-3156 | 2 | | RESISTOR 14.7K 1% .125W F TC=0+-100 | 24546 | C4-1/8-T0-1472-F |
| A3A1A1R6 | 0757-0401 | 0 | | RESISTOR 100 1% .125W F TC=0+-100 | 24546 | C4-1/8-T0-101-F |
| A3A1A1R7 | 0757-0420 | 3 | 6 | RESISTOR 750 1% .125W F TC=0+-100 | 24546 | C4-1/8-T0-751-F |
| A3A1A1R8 | 0757-0438 | 3 | | RESISTOR 5.11K 1% .125W F TC=0+-100 | 24546 | C4-1/8-T0-5111-F |
| A3A1A1R9 | 0757-0399 | 5 | | RESISTOR 82.5 1% .125W F TC=0+-100 | 24546 | C4-1/8-T0-82R5-F |
| A3A1A1R10 | 0698-7222 | 1 | 2 | RESISTOR 261 1% .05W F TC=0+-100 | 24546 | C3-1/8-T0-261R-F |
| A3A1A1R11 | 0698-7219 | 8 | 7 | RESISTOR 196 1% .05W F TC=0+-100 | 24546 | C3-1/8-T0-196R-F |
| A3A1A1R12 | 0757-0442 | 9 | 19 | RESISTOR 10K 1% .125W F TC=0+-100 | 24546 | C4-1/8-T0-1002-F |
| A3A1A1R13 | 0698-3453 | 2 | 3 | RESISTOR 196K 1% .125W F TC=0+-100 | 24546 | C4-1/8-T0-1963-F |
| A3A1A1R14 | 0757-0442 | 9 | | RESISTOR 10K 1% .125W F TC=0+-100 | 24546 | C4-1/8-T0-1002-F |
| A3A1A1R15 | 0698-3453 | 2 | | RESISTOR 196K 1% .125W F TC=0+-100 | 24546 | C4-1/8-T0-1963-F |
| A3A1A1R16 | 0757-0441 | 8 | 6 | RESISTOR 8.25K 1% .125W F TC=0+-100 | 24546 | C4-1/8-T0-8251-F |
| A3A1A1R17 | 0698-3438 | 3 | 3 | RESISTOR 147 1% .125W F TC=0+-100 | 24546 | C4-1/8-T0-147R-F |
| A3A1A1R18 | 0757-0346 | 2 | | RESISTOR 10 1% .125W F TC=0+-100 | 24546 | C4-1/8-T0-10R0-F |
| A3A1A1R19 | 0757-0346 | 2 | | RESISTOR 10 1% .125W F TC=0+-100 | 24546 | C4-1/8-T0-10R0-F |
| A3A1A1R20 | 0757-0441 | 8 | | RESISTOR 8.25K 1% .125W F TC=0+-100 | 24546 | C4-1/8-T0-8251-F |
| A3A1A1R21 | 0698-3438 | 3 | | RESISTOR 147 1% .125W F TC=0+-100 | 24546 | C4-1/8-T0-147R-F |
| A3A1A1R22 | 0698-3136 | 8 | 1 | RESISTOR 17.8K 1% .125W F TC=0+-100 | 24546 | C4-1/8-T0-1782-F |
| A3A1A1R23 | 0757-0346 | 2 | | RESISTOR 10 1% .125W F TC=0+-100 | 24546 | C4-1/8-T0-10R0-F |
| A3A1A1R24 | 0698-3154 | 0 | 12 | RESISTOR 4.22K 1% .125W F TC=0+-100 | 24546 | C4-1/8-T0-4221-F |
| A3A1A1R25 | 0757-0346 | 2 | | RESISTOR 10 1% .125W F TC=0+-100 | 24546 | C4-1/8-T0-10R0-F |
| A3A1A1R26 | 0757-0280 | 3 | 23 | RESISTOR 1K 1% .125W F TC=0+-100 | 24546 | C4-1/8-T0-1001-F |
| A3A1A1R27 | 0698-3154 | 0 | | RESISTOR 4.22K 1% .125W F TC=0+-100 | 24546 | C4-1/8-T0-4221-F |
| A3A1A1R28 | 0698-3450 | 9 | 3 | RESISTOR 42.2K 1% .125W F TC=0+-100 | 24546 | C4-1/8-T0-4222-F |
| A3A1A1R29 | 0698-3449 | 6 | 2 | RESISTOR 28.7K 1% .125W F TC=0+-100 | 24546 | C4-1/8-T0-2872-F |
| A3A1A1R30 | 0757-0444 | 1 | 2 | RESISTOR 12.1K 1% .125W F TC=0+-100 | 24546 | C4-1/8-T0-1212-F |



www.valuetronics.com

A3

Table 6-3. Replaceable Parts

| Reference Designation | HP Part Number | C D | Qty | Description | Mfr Code | Mfr Part Number |
|---|---|---|---|---|---|---|
| A3A1A1R31 | 0698-3154 | 0 | | RESISTOR 4.22K 1% .125W F TC=0+-100 | 24546 | C4-1/8-T0-4221-F |
| A3A1A1R32 | 0757-0346 | 2 | | RESISTOR 10 1% .125W F TC=0+-100 | 24546 | C4-1/8-T0-10R0-F |
| A3A1A1R33 | 0698-3154 | 0 | | RESISTOR 4.22K 1% .125W F TC=0+-100 | 24546 | C4-1/8-T0-4221-F |
| A3A1A1R34 | 0757-0346 | 2 | | RESISTOR 10 1% .125W F TC=0+-100 | 24546 | C4-1/8-T0-10R0-F |
| A3A1A1R35 | 0757-0280 | 3 | | RESISTOR 1K 1% .125W F TC=0+-100 | 24546 | C4-1/8-T0-1001-F |
| A3A1A1R36 | 0757-0444 | 1 | | RESISTOR 12.1K 1% .125W F TC=0+-100 | 24546 | C4-1/8-T0-1212-F |
| A3A1A1R37 | 0757-0200 | 7 | 1 | RESISTOR 5.62K 1% .125W F TC=0+-100 | 24546 | C4-1/8-T0-5621-F |
| A3A1A1R38 | 0757-0421 | 4 | | RESISTOR 825 1% .125W F TC=0+-100 | 24546 | C4-1/8-T0-825R-F |
| A3A1A1R39 | 0757-0440 | 7 | 5 | RESISTOR 7.5K 1% .125W F TC=0+-100 | 24546 | C4-1/8-T0-7501-F |
| A3A1A1R40 | 0757-0394 | 0 | 16 | RESISTOR 51.1 1% .125W F TC=0+-100 | 24546 | C4-1/8-T0-51R1-F |
| A3A1A1R41 | 0698-3446 | 3 | 2 | RESISTOR 383 1% .125W F TC=0+-100 | 24546 | C4-1/8-T0-383R-F |
| A3A1A1R42 | 0698-0085 | 0 | 7 | RESISTOR 2.61K 1% .125W F TC=0+-100 | 24546 | C4-1/8-T0-2611-F |
| A3A1A1R43 | 0757-0442 | 9 | | RESISTOR 10K 1% .125W F TC=0+-100 | 24546 | C4-1/8-T0-1002-F |
| A3A1A1R44 | 0757-0442 | 9 | | RESISTOR 10K 1% .125W F TC=0+-100 | 24546 | C4-1/8-T0-1002-F |
| A3A1A1R45 | 0757-0280 | 3 | | RESISTOR 1K 1% .125W F TC=0+-100 | 24546 | C4-1/8-T0-1001-F |
| A3A1A1R46 | 0698-3154 | 0 | | RESISTOR 4.22K 1% .125W F TC=0+-100 | 24546 | C4-1/8-T0-4221-F |
| A3A1A1R47 | 0698-3453 | 2 | | RESISTOR 196K 1% .125W F TC=0+-100 | 24546 | C4-1/8-T0-1963-F |
| A3A1A1R48 | 0757-0442 | 9 | | RESISTOR 10K 1% .125W F TC=0+-100 | 24546 | C4-1/8-T0-1002-F |
| A3A1A1R49 | 0698-7285 | 6 | 1 | RESISTOR 110K 1% .05W F TC=0+-100 | 24546 | C3-1/8-T0-1103-F |
| A3A1A1R50 | 0698-3157 | 3 | 6 | RESISTOR 19.6K 1% .125W F TC=0+-100 | 24546 | C4-1/8-T0-1962-F |
| A3A1A1R51 | 0698-3157 | 3 | | RESISTOR 19.6K 1% .125W F TC=0+-100 | 24546 | C4-1/8-T0-1962-F |
| A3A1A1R52 | 0757-0401 | 0 | | RESISTOR 100 1% .125W F TC=0+-100 | 24546 | C4-1/8-T0-101-F |
| A3A1A1R53 | 0698-3440 | 7 | 8 | RESISTOR 196 1% .125W F TC=0+-100 | 24546 | C4-1/8-T0-196R-F |
| A3A1A1R54 | 0698-7234 | 5 | 1 | RESISTOR 825 1% .05W F TC=0+-100 | 24546 | C3-1/8-T0-825R-F |
| A3A1A1R55 | 0698-7257 | 2 | 1 | RESISTOR 7.5K 1% .05W F TC=0+-100 | 24546 | C3-1/8-T0-7501-F |
| A3A1A1R56 | 0757-0394 | 0 | | RESISTOR 51.1 1% .125W F TC=0+-100 | 24546 | C4-1/8-T0-51R1-F |
| A3A1A1R57 | 0698-3446 | 3 | | RESISTOR 383 1% .125W F TC=0+-100 | 24546 | C4-1/8-T0-383R-F |
| A3A1A1R58 | 0698-7246 | 9 | 1 | RESISTOR 2.61K 1% .05W F TC=0+-100 | 24546 | C3-1/8-T0-2611-F |
| A3A1A1R59 | 0698-3440 | 7 | | RESISTOR 196 1% .125W F TC=0+-100 | 24546 | C4-1/8-T0-196R-F |
| A3A1A1R60 | 0757-0276 | 7 | | RESISTOR 61.9 1% .125W F TC=0+-100 | 24546 | C4-1/8-T0-6192-F |
| A3A1A1R61 | 0757-0280 | 3 | | RESISTOR 1K 1% .125W F TC=0+-100 | 24546 | C4-1/8-T0-1001-F |
| A3A1A1R62 | 0757-1094 | 9 | 3 | RESISTOR 1.47K 1% .125W F TC=0+-100 | 24546 | C4-1/8-T0-1471-F |
| A3A1A1R63 | 0698-0085 | 0 | | RESISTOR 2.61K 1% .125W F TC=0+-100 | 24546 | C4-1/8-T0-2611-F |
| A3A1A1R64 | 0698-3132 | 4 | 4 | RESISTOR 261 1% .125W F TC=0+-100 | 24546 | C4-1/8-T0-2610-F |
| A3A1A1R65 | 0698-0085 | 0 | | RESISTOR 2.61K 1% .125W F TC=0+-100 | 24546 | C4-1/8-T0-2611-F |
| A3A1A1R66 | 0757-0421 | 4 | | RESISTOR 825 1% .125W F TC=0+-100 | 24546 | C4-1/8-T0-825R-F |
| A3A1A1R67 | 0757-0280 | 3 | | RESISTOR 1K 1% .125W F TC=0+-100 | 24546 | C4-1/8-T0-1001-F |
| A3A1A1R68 | 0757-0416 | 7 | | RESISTOR 511 1% .125W F TC=0+-100 | 24546 | C4-1/8-T0-511R-F |
| A3A1A1R69 | 0757-0416 | 7 | | RESISTOR 511 1% .125W F TC=0+-100 | 24546 | C4-1/8-T0-511R-F |
| A3A1A1R70 | 0757-0416 | 7 | | RESISTOR 511 1% .125W F TC=0+-100 | 24546 | C4-1/8-T0-511R-F |
| A3A1A1R71 | 0757-0274 | 5 | 1 | RESISTOR 1.21K 1% .125W F TC=0+-100 | 24546 | C4-1/8-T0-1211-F |
| A3A1A1R72 | 0698-3132 | 4 | | RESISTOR 261 1% .125W F TC=0+-100 | 24546 | C4-1/8-T0-2610-F |
| A3A1A1R73 | 0757-0317 | 7 | 2 | RESISTOR 1.33K 1% .125W F TC=0+-100 | 24546 | C4-1/8-T0-1331-F |
| A3A1A1R74 | 0757-0289 | 2 | 1 | RESISTOR 13.3K 1% .125W F TC=0+-100 | 19701 | MF4C1/8-T0-1332-F |
| A3A1A1R75 | 0698-7238 | 7 | 4 | RESISTOR 1K 1% .05W F TC=0+-100 | 24546 | C3-1/8-T0-1001-F |
| A3A1A1T1 | 86701-60082 | 8 | 2 | TRANSFORMER-RF | 28480 | 86701-60082 |
| A3A1A1T2 | 86701-60082 | 8 | | TRANSFORMER-RF | 28480 | 86701-60082 |
| A3A1A1TP1 | 1251-0600 | 0 | | CONNECTOR-SGL CONT PIN 1.14-MM-BSC-SZ SQ | 28480 | 1251-0600 |
| A3A1A1U1 | 1821-0001 | 4 | 1 | TRANSISTOR ARRAY 14-PIN PLSTC DIP | 3L585 | CA3046 |
| A3A1A1U2 | 1820-0328 | 6 | 1 | IC GATE TTL NOR QUAD 2-INP | 01295 | SN7402N |
| A3A1A1U3 | 1820-1383 | 5 | 1 | IC CNTR ECL BCD POS-EDGE-TRIG | 04713 | MC10138L |
| A3A1A1U4 | 1820-0802 | 1 | 6 | IC GATE ECL NOR QUAD 2-INP | 04713 | MC10102P |
| A3A1A1U5 | 1820-0223 | 0 | 6 | IC OP AMP GP TO-99 PKG | 3L585 | CA301AT |
| A3A1A1U6 | 1820-0429 | 8 | 1 | IC V RGLTR TO-39 | 18324 | LM309H |
| A3A1A1VR1 | 1902-3082 | 9 | 3 | DIODE-ZNR 4.64V 5% DO-35 PD=.4W | 28480 | 1902-3082 |
| A3A1A1VR2 | 1902-3256 | 9 | 1 | DIODE-ZNR 23.7V 5% DO-35 PD=.4W | 28480 | 1902-3256 |
| A3A1A1W1 | 86701-60059 | 9 | 1 | CABLE ASSEMBLY-GRAY/ORANGE/WHITE | 28480 | 86701-60059 |
| A3A1A2 | 86701-60020 | 4 | 1 | 100 MHZ VCXO ASSEMBLY | 28480 | 86701-60020 |
| A3A1A2C1 | 0121-0495 | 5 | 3 | CAPACITOR-V TRMR-AIR 1.8-15.7PF 175V | 74970 | 187-0309-125 |
| A3A1A2C2 | 0121-0495 | 5 | | CAPACITOR-V TRMR-AIR 1.8-15.7PF 175V | 74970 | 187-0309-125 |
| A3A1A2C3 | 0121-0495 | 5 | | CAPACITOR-V TRMR-AIR 1.8-15.7PF 175V | 74970 | 187-0309-125 |
| A3A1A2C4 | 0121-0453 | 5 | 1 | CAPACITOR-V TRMR-AIR 1.3-5.4PF 175V | 74970 | 187-0303-125 |
| A3A1A2C5 | 0180-0049 | 9 | 1 | CAPACITOR-FXD 20UF+75-10% 50VDC AL | 56289 | 30D206G050CC2 |

See introduction to this section for ordering information
*Indicates factory selected value
†Backdating information in Section VII



www.valuetronics.com

Table 6-3. Replaceable Parts

| Reference Designation | HP Part Number | C D | Qty | Description | Mfr Code | Mfr Part Number |
|---|---|---|---|---|---|---|
| A3A1A2C6 | 0160-3456 | 6 | 3 | CAPACITOR-FXD 1000PF +-10% 1KVDC CER | 28480 | 0160-3456 |
| A3A1A2C7 | 0160-3454 | 4 | | CAPACITOR-FXD 220PF +-10% 1KVDC CER | 28480 | 0160-3454 |
| A3A1A2C8* | 0160-2259 | 5 | 1 | CAPACITOR-FXD 12PF +-5% 500VDC CER 0+-30 | 28480 | 0160-2259 |
| A3A1A2C9 | 0160-4084 | 8 | | CAPACITOR-FXD .1UF +-20% 50VDC CER | 28480 | 0160-4084 |
| A3A1A2C10 | 0140-0191 | 8 | 1 | CAPACITOR-FXD 56PF +-5% 300VDC MICA | 72136 | DM15E560J0300WV1CR |
| A3A1A2C11 | 0160-2204 | 0 | | CAPACITOR-FXD 100PF +-5% 300VDC MICA | 28480 | 0160-2204 |
| A3A1A2C12 | 0160-3454 | 4 | | CAPACITOR-FXD 220PF +-10% 1KVDC CER | 28480 | 0160-3454 |
| A3A1A2C13 | 0160-3454 | 4 | | CAPACITOR-FXD 220PF +-10% 1KVDC CER | 28480 | 0160-3454 |
| A3A1A2C14 | 0160-3454 | 4 | | CAPACITOR-FXD 220PF +-10% 1KVDC CER | 28480 | 0160-3454 |
| A3A1A2C15 | 0160-2261 | 9 | 8 | CAPACITOR-FXD 15PF +-5% 500VDC CER 0+-30 | 28480 | 0160-2261 |
| A3A1A2C16 | 0160-2261 | 9 | | CAPACITOR-FXD 15PF +-5% 500VDC CER 0+-30 | 28480 | 0160-2261 |
| A3A1A2C17 | 0160-3454 | 4 | | CAPACITOR-FXD 220PF +-10% 1KVDC CER | 28480 | 0160-3454 |
| A3A1A2C18 | 0160-3454 | 4 | | CAPACITOR-FXD 220PF +-10% 1KVDC CER | 28480 | 0160-3454 |
| A3A1A2C19 | 0160-2261 | 9 | | CAPACITOR-FXD 15PF +-5% 500VDC CER 0+-30 | 28480 | 0160-2261 |
| A3A1A2C20 | 0160-2261 | 9 | | CAPACITOR-FXD 15PF +-5% 500VDC CER 0+-30 | 28480 | 0160-2261 |
| A3A1A2C21 | 0160-3454 | 4 | | CAPACITOR-FXD 220PF +-10% 1KVDC CER | 28480 | 0160-3454 |
| A3A1A2C22 | 0160-3454 | 4 | | CAPACITOR-FXD 220PF +-10% 1KVDC CER | 28480 | 0160-3454 |
| A3A1A2C23 | 0160-3454 | 4 | | CAPACITOR-FXD 220PF +-10% 1KVDC CER | 28480 | 0160-3454 |
| A3A1A2C24 | 0160-3454 | 4 | | CAPACITOR-FXD 220PF +-10% 1KVDC CER | 28480 | 0160-3454 |
| A3A1A2C25 | 0160-3454 | 4 | | CAPACITOR-FXD 220PF +-10% 1KVDC CER | 28480 | 0160-3454 |
| A3A1A2C26 | 0160-2261 | 9 | | CAPACITOR-FXD 15PF +-5% 500VDC CER 0+-30 | 28480 | 0160-2261 |
| A3A1A2C27 | 0160-2261 | 9 | | CAPACITOR-FXD 15PF +-5% 500VDC CER 0+-30 | 28480 | 0160-2261 |
| A3A1A2C28 | 0160-3454 | 4 | | CAPACITOR-FXD 220PF +-10% 1KVDC CER | 28480 | 0160-3454 |
| A3A1A2C29 | 0160-3454 | 4 | | CAPACITOR-FXD 220PF +-10% 1KVDC CER | 28480 | 0160-3454 |
| A3A1A2C30 | 0160-3454 | 4 | | CAPACITOR-FXD 220PF +-10% 1KVDC CER | 28480 | 0160-3454 |
| A3A1A2C31 | 0160-3454 | 4 | | CAPACITOR-FXD 220PF +-10% 1KVDC CER | 28480 | 0160-3454 |
| A3A1A2C32 | 0160-2261 | 9 | | CAPACITOR-FXD 15PF +-5% 500VDC CER 0+-30 | 28480 | 0160-2261 |
| A3A1A2C33 | 0160-2261 | 9 | | CAPACITOR-FXD 15PF +-5% 500VDC CER 0+-30 | 28480 | 0160-2261 |
| A3A1A2C34 | 0160-3454 | 4 | | CAPACITOR-FXD 220PF +-10% 1KVDC CER | 28480 | 0160-3454 |
| A3A1A2C35 | 0160-3454 | 4 | | CAPACITOR-FXD 220PF +-10% 1KVDC CER | 28480 | 0160-3454 |
| A3A1A2C36 | 0160-3878 | 6 | | CAPACITOR-FXD 1000PF +-20% 100VDC CER | 28480 | 0160-3878 |
| A3A1A2C37 | 0160-3878 | 6 | | CAPACITOR-FXD 1000PF +-20% 100VDC CER | 28480 | 0160-3878 |
| A3A1A2C38 | 0160-3878 | 6 | | CAPACITOR-FXD 1000PF +-20% 100VDC CER | 28480 | 0160-3878 |
| A3A1A2C39 | 0160-3454 | 4 | | CAPACITOR-FXD 220PF +-10% 1KVDC CER | 28480 | 0160-3454 |
| A3A1A2C40 | 0160-2238 | 0 | 1 | CAPACITOR-FXD 1.5PF +-.25PF 500VDC CER | 28480 | 0160-2238 |
| A3A1A2C41 | 0160-3878 | 6 | | CAPACITOR-FXD 1000PF +-20% 100VDC CER | 28480 | 0160-3878 |
| A3A1A2C42 | 0160-3878 | 6 | | CAPACITOR-FXD 1000PF +-20% 100VDC CER | 28480 | 0160-3878 |
| A3A1A2C43 | 0180-0116 | 1 | 12 | CAPACITOR-FXD 6.8UF+-10% 35VDC TA | 56289 | 150D685X9035B2 |
| A3A1A2C44 | 0160-2253 | 9 | 1 | CAPACITOR-FXD 6.8PF +-.25PF 500VDC CER | 28480 | 0160-2253 |
| A3A1A2C45 | 0160-3878 | 6 | | CAPACITOR-FXD 1000PF +-20% 100VDC CER | 28480 | 0160-3878 |
| A3A1A2C46 | 0160-3878 | 6 | | CAPACITOR-FXD 1000PF +-20% 100VDC CER | 28480 | 0160-3878 |
| A3A1A2C47 | 0160-3454 | 4 | | CAPACITOR-FXD 220PF +-10% 1KVDC CER | 28480 | 0160-3454 |
| A3A1A2C48 | 0160-3456 | 6 | | CAPACITOR-FXD 1000PF +-10% 1KVDC CER | 28480 | 0160-3456 |
| A3A1A2C49 | 0160-3456 | 6 | | CAPACITOR-FXD 1000PF +-10% 1KVDC CER | 28480 | 0160-3456 |
| A3A1A2C50 | 0180-0116 | 1 | | CAPACITOR-FXD 6.8UF+-10% 35VDC TA | 56289 | 150D685X9035B2 |
| A3A1A2C51 | 0160-4299 | 7 | 11 | CAPACITOR-FXD 2200PF +-20% 250VDC CER | 56289 | C067F251F222MS22-CDH |
| A3A1A2C52 | 0160-3454 | 4 | | CAPACITOR-FXD 220PF +-10% 1KVDC CER | 28480 | 0160-3454 |
| A3A1A2C53 | 0160-3454 | 4 | | CAPACITOR-FXD 220PF +-10% 1KVDC CER | 28480 | 0160-3454 |
| A3A1A2C54 | 0160-3454 | 4 | | CAPACITOR-FXD 220PF +-10% 1KVDC CER | 28480 | 0160-3454 |
| A3A1A2C55 | 0160-3454 | 4 | | CAPACITOR-FXD 220PF +-10% 1KVDC CER | 28480 | 0160-3454 |
| A3A1A2C56 | 0160-2437 | 1 | 13 | CAPACITOR-FDTHRU 5000PF +80 -20% 200V | 28480 | 0160-2437 |
| A3A1A2CR1 | 0122-0245 | 5 | 1 | DIODE-VVC 1N5139 6.8PF 10% | 01281 | 1N5139 |
| A3A1A2CR2 | | | | NOT ASSIGNED | | |
| A3A1A2CR3 | 1901-0539 | 3 | 2 | DIODE-SM SIG SCHOTTKY | 28480 | 1901-0539 |
| A3A1A2CR4 | 1901-0539 | 3 | | DIODE-SM SIG SCHOTTKY | 28480 | 1901-0539 |
| A3A1A2J1 | 1250-0544 | 9 | | CONNECTOR-RF SM-SNP M SGL-HOLE-FR 50-OHM | 28480 | 1250-0544 |
| A3A1A2J2 | 1250-0544 | 9 | | CONNECTOR-RF SM-SNP M SGL-HOLE-FR 50-OHM | 28480 | 1250-0544 |
| A3A1A2J3 | 1250-0544 | 9 | | CONNECTOR-RF SM-SNP M SGL-HOLE-FR 50-OHM | 28480 | 1250-0544 |
| A3A1A2J4 | | | | PART OF A3A1A2W1 | | |
| A3A1A2L1 | | | | NOT ASSIGNED | | |
| A3A1A2L2 | 9100-2249 | 6 | 3 | INDUCTOR RF-CH-MLD 150NH 10% .105DX.26LG | 28480 | 9100-2249 |
| A3A1A2L3 | 9140-0158 | 6 | 2 | INDUCTOR RF-CH-MLD 1UH 10% .105DX.26LG | 28480 | 9140-0158 |
| A3A1A2L4* | 9100-2254 | 3 | 3 | INDUCTOR RF-CH-MLD 390NH 10% .105DX.26LG | 28480 | 9100-2254 |
| A3A1A2L5 | 9100-2538 | 6 | 1 | INDUCTOR RF-CH-MLD 1UH 10% .161DX.385LG | 28480 | 9100-2538 |

See introduction to this section for ordering information
*Indicates factory selected value
†Backdating information in Section VII



www.valuetronics.com

A3

Table 6-3. Replaceable Parts

| Reference Designation | HP Part Number | C D | Qty | Description | Mfr Code | Mfr Part Number |
|---|---|---|---|---|---|---|
| A3A1A2L6 | 9100-2251 | 0 | 5 | INDUCTOR RF-CH-MLD 220NH 10% .105DX.26LG | 28480 | 9100-2251 |
| A3A1A2L7 | 9100-2251 | 0 | | INDUCTOR RF-CH-MLD 220NH 10% .105DX.26LG | 28480 | 9100-2251 |
| A3A1A2L8 | 9100-2251 | 0 | | INDUCTOR RF-CH-MLD 220NH 10% .105DX.26LG | 28480 | 9100-2251 |
| A3A1A2L9 | 9100-2251 | 0 | | INDUCTOR RF-CH-MLD 220NH 10% .105DX.26LG | 28480 | 9100-2251 |
| A3A1A2L10 | | | | PART OF ETCHED CIRCUIT BOARD | | |
| A3A1A2L11 | | | | PART OF ETCHED CIRCUIT BOARD | | |
| A3A1A2L12 | | | | PART OF ETCHED CIRCUIT BOARD | | |
| A3A1A2L13 | | | | NOT ASSIGNED | | |
| A3A1A2L14 | 9100-2247 | 4 | 2 | INDUCTOR RF-CH-MLD 100NH 10% .105DX.26LG | 28480 | 9100-2247 |
| A3A1A2L15 | 9100-2247 | 4 | | INDUCTOR RF-CH-MLD 100NH 10% .105DX.26LG | 28480 | 9100-2247 |
| A3A1A2MP1 | 2190-0019 | 6 | | WASHER-LK HLCL NO. 4 .119-IN-ID | 28480 | 2190-0019 |
| A3A1A2MP2 | 2190-0124 | 4 | | WASHER-LK INTL T NO. 10 .195-IN-ID | 28480 | 2190-0124 |
| A3A1A2MP3 | 1200-0173 | 5 | 3 | INSULATOR-XSTR DAP-GL | 28480 | 1200-0173 |
| A3A1A2MP4 | 2200-0139 | 4 | | SCREW-MACH 4-40 .25-IN-LG PAN-HD-POZI | 28480 | 2200-0139 |
| A3A1A2MP5 | 86701-60073 | 7 | 1 | SHIELD ASSEMBLY | 28480 | 86701-60073 |
| A3A1A2MP6 | 86701-20039 | 1 | 1 | COVER- P.C. VCXO BOARD | 28480 | 86701-20039 |
| A3A1A2MP7 | 86701-40001 | 9 | | EXTRACTOR-P.C. BOARD | 28480 | 86701-40001 |
| A3A1A2MP8 | 1400-0401 | 6 | 1 | CABLE TIE .75-DIA .094-WD NYL | 28480 | 1400-0401 |
| A3A1A2MP9 | 2580-0002 | 4 | 4 | NUT-HEX-DBL-CHAM 8-32-THD .085-IN-THK | 28480 | 2580-0002 |
| A3A1A2Q1 | 1854-0345 | 8 | 16 | TRANSISTOR NPN 2N5179 SI TO-72 PD=200MW | 04713 | 2N5179 |
| A3A1A2Q2 | 1854-0345 | 8 | | TRANSISTOR NPN 2N5179 SI TO-72 PD=200MW | 04713 | 2N5179 |
| A3A1A2Q3 | 1854-0345 | 8 | | TRANSISTOR NPN 2N5179 SI TO-72 PD=200MW | 04713 | 2N5179 |
| A3A1A2Q4 | 1854-0345 | 8 | | TRANSISTOR NPN 2N5179 SI TO-72 PD=200MW | 04713 | 2N5179 |
| A3A1A2Q5 | 1854-0247 | 9 | 5 | TRANSISTOR NPN SI TO-39 PD=1W FT=800MHZ | 28480 | 1854-0247 |
| A3A1A2Q6 | 1854-0345 | 8 | | TRANSISTOR NPN 2N5179 SI TO-72 PD=200MW | 04713 | 2N5179 |
| A3A1A2Q7 | 1854-0345 | 8 | | TRANSISTOR NPN 2N5179 SI TO-72 PD=200MW | 04713 | 2N5179 |
| A3A1A2Q8 | 1854-0345 | 8 | | TRANSISTOR NPN 2N5179 SI TO-72 PD=200MW | 04713 | 2N5179 |
| A3A1A2Q9 | 1854-0345 | 8 | | TRANSISTOR NPN 2N5179 SI TO-72 PD=200MW | 04713 | 2N5179 |
| A3A1A2Q10 | 1854-0404 | 0 | 16 | TRANSISTOR NPN SI TO-18 PD=360MW | 28480 | 1854-0404 |
| A3A1A2Q11 | 1854-0345 | 8 | | TRANSISTOR NPN 2N5179 SI TO-72 PD=200MW | 04713 | 2N5179 |
| A3A1A2R1 | 0757-0279 | 0 | 5 | RESISTOR 3.16K 1% .125W F TC=0+-100 | 24546 | C4-1/8-T0-3161-F |
| A3A1A2R2 | 0757-0419 | 0 | 4 | RESISTOR 681 1% .125W F TC=0+-100 | 24546 | C4-1/8-T0-681R-F |
| A3A1A2R3 | 0698-3440 | 7 | | RESISTOR 196 1% .125W F TC=0+-100 | 24546 | C4-1/8-T0-196R-F |
| A3A1A2R4 | 0757-0422 | 5 | 8 | RESISTOR 909 1% .125W F TC=0+-100 | 24546 | C4-1/8-T0-909R-F |
| A3A1A2R5 | 0698-3155 | 1 | 9 | RESISTOR 4.64K 1% .125W F TC=0+-100 | 24546 | C4-1/8-T0-4641-F |
| A3A1A2R6 | 0698-7224 | 3 | 6 | RESISTOR 316 1% .05W F TC=0+-100 | 24546 | C3-1/8-T0-316R-F |
| A3A1A2R7 | 0757-0346 | 2 | | RESISTOR 10 1% .125W F TC=0+-100 | 24546 | C4-1/8-T0-10R0-F |
| A3A1A2R8 | 0757-0422 | 5 | | RESISTOR 909 1% .125W F TC=0+-100 | 24546 | C4-1/8-T0-909R-F |
| A3A1A2R9 | 0757-0442 | 9 | | RESISTOR 10K 1% .125W F TC=0+-100 | 24546 | C4-1/8-T0-1002-F |
| A3A1A2R10 | 0757-0401 | 0 | | RESISTOR 100 1% .125W F TC=0+-100 | 24546 | C4-1/8-T0-101-F |
| A3A1A2R11 | 0757-0394 | 0 | | RESISTOR 51.1 1% .125W F TC=0+-100 | 24546 | C4-1/8-T0-51R1-F |
| A3A1A2R12 | 0757-0416 | 7 | | RESISTOR 511 1% .125W F TC=0+-100 | 24546 | C4-1/8-T0-511R-F |
| A3A1A2R13 | 0757-0394 | 0 | | RESISTOR 51.1 1% .125W F TC=0+-100 | 24546 | C4-1/8-T0-51R1-F |
| A3A1A2R14 | 0757-0416 | 7 | | RESISTOR 511 1% .125W F TC=0+-100 | 24546 | C4-1/8-T0-511R-F |
| A3A1A2R15 | 0757-0422 | 5 | | RESISTOR 909 1% .125W F TC=0+-100 | 24546 | C4-1/8-T0-909R-F |
| A3A1A2R16 | 0757-0401 | 0 | | RESISTOR 100 1% .125W F TC=0+-100 | 24546 | C4-1/8-T0-101-F |
| A3A1A2R17 | 0698-3150 | 6 | 18 | RESISTOR 2.37K 1% .125W F TC=0+-100 | 24546 | C4-1/8-T0-2371-F |
| A3A1A2R18 | 0698-3150 | 6 | | RESISTOR 2.37K 1% .125W F TC=0+-100 | 24546 | C4-1/8-T0-2371-F |
| A3A1A2R19 | 0698-7198 | 0 | 2 | RESISTOR 26.1 1% .05W F TC=0+-100 | 24546 | C3-1/8-T0-26R1-F |
| A3A1A2R20 | 0698-3443 | 0 | 7 | RESISTOR 287 1% .125W F TC=0+-100 | 24546 | C4-1/8-T0-287R-F |
| A3A1A2R21 | 0698-3428 | 2 | 6 | RESISTOR 19.6 1% .125W F TC=0+-100 | 03888 | PME55-1/8-T0-19R6-F |
| A3A1A2R22 | 0698-3443 | 0 | | RESISTOR 287 1% .125W F TC=0+-100 | 24546 | C4-1/8-T0-287R-F |
| A3A1A2R23 | 0698-3150 | 6 | | RESISTOR 2.37K 1% .125W F TC=0+-100 | 24546 | C4-1/8-T0-2371-F |
| A3A1A2R24 | 0757-0401 | 0 | | RESISTOR 100 1% .125W F TC=0+-100 | 24546 | C4-1/8-T0-101-F |
| A3A1A2R25 | 0698-3150 | 6 | | RESISTOR 2.37K 1% .125W F TC=0+-100 | 24546 | C4-1/8-T0-2371-F |
| A3A1A2R26 | 0757-0416 | 7 | | RESISTOR 511 1% .125W F TC=0+-100 | 24546 | C4-1/8-T0-511R-F |
| A3A1A2R27 | 0757-0346 | 2 | | RESISTOR 10 1% .125W F TC=0+-100 | 24546 | C4-1/8-T0-10R0-F |
| A3A1A2R28 | 0757-0422 | 5 | | RESISTOR 909 1% .125W F TC=0+-100 | 24546 | C4-1/8-T0-909R-F |
| A3A1A2R29 | 0698-7198 | 0 | | RESISTOR 26.1 1% .05W F TC=0+-100 | 24546 | C3-1/8-T0-26R1-F |
| A3A1A2R30 | 0698-3443 | 0 | | RESISTOR 287 1% .125W F TC=0+-100 | 24546 | C4-1/8-T0-287R-F |
| A3A1A2R31 | 0698-3429 | 2 | | RESISTOR 19.6 1% .125W F TC=0+-100 | 03888 | PME55-1/8-T0-19R6-F |
| A3A1A2R32 | 0698-3443 | 0 | | RESISTOR 287 1% .125W F TC=0+-100 | 24546 | C4-1/8-T0-287R-F |
| A3A1A2R33 | 0698-3443 | 0 | | RESISTOR 287 1% .125W F TC=0+-100 | 24546 | C4-1/8-T0-287R-F |
| A3A1A2R34 | 0698-3429 | 2 | | RESISTOR 19.6 1% .125W F TC=0+-100 | 03888 | PME55-1/8-T0-19R6-F |
| A3A1A2R35 | 0698-3443 | 0 | | RESISTOR 287 1% .125W F TC=0+-100 | 24546 | C4-1/8-T0-287R-F |

See introduction to this section for ordering information
*Indicates factory selected value
†Backdating information in Section VII



www.valuetronics.com

Table 6-3. Replaceable Parts

| Reference Designation | HP Part Number | CD | Qty | Description | Mfr Code | Mfr Part Number |
|---|---|---|---|---|---|---|
| A3A1A2R36 | 0698-3150 | 6 | | RESISTOR 2.37K 1% .125W F TC=0+-100 | 24546 | C4-1/8-T0-2371-F |
| A3A1A2R37 | 0757-0422 | 5 | | RESISTOR 909 1% .125W F TC=0+-100 | 24546 | C4-1/8-T0-909R-F |
| A3A1A2R38 | 0757-0401 | 0 | | RESISTOR 100 1% .125W F TC=0+-100 | 24546 | C4-1/8-T0-101-F |
| A3A1A2R39 | 0698-3150 | 6 | | RESISTOR 2.37K 1% .125W F TC=0+-100 | 24546 | C4-1/8-T0-2371-F |
| A3A1A2R40 | 0757-0416 | 7 | | RESISTOR 511 1% .125W F TC=0+-100 | 24546 | C4-1/8-T0-511R-F |
| A3A1A2R41 | 0757-0394 | 0 | | RESISTOR 51.1 1% .125W F TC=0+-100 | 24546 | C4-1/8-T0-51R1-F |
| A3A1A2R42 | 0698-0084 | 9 | 7 | RESISTOR 2.15K 1% .125W F TC=0+-100 | 24546 | C4-1/8-T0-2151-F |
| A3A1A2R43 | 0698-3155 | 1 | | RESISTOR 4.64K 1% .125W F TC=0+-100 | 24546 | C4-1/8-T0-4641-F |
| A3A1A2R44 | 0698-0084 | 9 | | RESISTOR 2.15K 1% .125W F TC=0+-100 | 24546 | C4-1/8-T0-2151-F |
| A3A1A2R45 | 0698-0084 | 9 | | RESISTOR 2.15K 1% .125W F TC=0+-100 | 24546 | C4-1/8-T0-2151-F |
| A3A1A2R46 | 0757-0279 | 0 | | RESISTOR 3.16K 1% .125W F TC=0+-100 | 24546 | C4-1/8-T0-3161-F |
| A3A1A2R47 | 0757-0439 | 4 | 3 | RESISTOR 6.81K 1% .125W F TC=0+-100 | 24546 | C4-1/8-T0-6811-F |
| A3A1A2R48 | 0757-0416 | 7 | | RESISTOR 511 1% .125W F TC=0+-100 | 24546 | C4-1/8-T0-511R-F |
| A3A1A2R49 | 0757-0279 | 0 | | RESISTOR 3.16K 1% .125W F TC=0+-100 | 24546 | C4-1/8-T0-3161-F |
| A3A1A2R50 | 0757-0439 | 4 | | RESISTOR 6.81K 1% .125W F TC=0+-100 | 24546 | C4-1/8-T0-6811-F |
| A3A1A2R51 | 0757-0416 | 7 | | RESISTOR 511 1% .125W F TC=0+-100 | 24546 | C4-1/8-T0-511R-F |
| A3A1A2R52 | 0757-0280 | 3 | | RESISTOR 1K 1% .125W F TC=0+-100 | 24546 | C4-1/8-T0-1001-F |
| A3A1A2R53 | 0757-0394 | 0 | | RESISTOR 51.1 1% .125W F TC=0+-100 | 24546 | C4-1/8-T0-51R1-F |
| A3A1A2R54 | 0757-0394 | 0 | | RESISTOR 51.1 1% .125W F TC=0+-100 | 24546 | C4-1/8-T0-51R1-F |
| A3A1A2R55 | 0757-0422 | 5 | | RESISTOR 909 1% .125W F TC=0+-100 | 24546 | C4-1/8-T0-909R-F |
| A3A1A2R56 | 0698-3150 | 6 | | RESISTOR 2.37K 1% .125W F TC=0+-100 | 24546 | C4-1/8-T0-2371-F |
| A3A1A2R57 | 0757-0401 | 0 | | RESISTOR 100 1% .125W F TC=0+-100 | 24546 | C4-1/8-T0-101-F |
| A3A1A2R58 | 0757-0401 | 0 | | RESISTOR 100 1% .125W F TC=0+-100 | 24546 | C4-1/8-T0-101-F |
| A3A1A2R59 | 0698-3150 | 6 | | RESISTOR 2.37K 1% .125W F TC=0+-100 | 24546 | C4-1/8-T0-2371-F |
| A3A1A2R60 | 0757-0280 | 3 | | RESISTOR 1K 1% .125W F TC=0+-100 | 24546 | C4-1/8-T0-1001-F |
| A3A1A2R61 | 0698-3441 | 8 | 2 | RESISTOR 215 1% .125W F TC=0+-100 | 24546 | C4-1/8-T0-215R-F |
| A3A1A2R62 | 0757-0401 | 0 | | RESISTOR 100 1% .125W F TC=0+-100 | 24546 | C4-1/8-T0-101-F |
| A3A1A2R63 | | | | NOT ASSIGNED | | |
| A3A1A2R64 | | | | NOT ASSIGNED | | |
| A3A1A2R65 | | | | NOT ASSIGNED | | |
| A3A1A2R66 | | | | NOT ASSIGNED | | |
| A3A1A2R67* | 0757-0402 | 1 | 3 | RESISTOR 110 1% .125W F TC=0+-100 | 24546 | C4-1/8-T0-111-F |
| A3A1A2R68* | 0757-0276 | 7 | 4 | RESISTOR 61.9 1% .125W F TC=0+-100 | 24546 | C4-1/8-T0-6192-F |
| A3A1A2R69* | 0757-0402 | 1 | | RESISTOR 110 1% .125W F TC=0+-100 | 24546 | C4-1/8-T0-111-F |
| A3A1A2T1 | 86701-60081 | 7 | 3 | TRANSFORMER-RF, BLUE | 28480 | 86701-60081 |
| A3A1A2T2 | 86701-60081 | 7 | | TRANSFORMER-RF, BLUE | 28480 | 86701-60081 |
| A3A1A2T3 | 86701-60081 | 7 | | TRANSFORMER-RF, BLUE | 28480 | 86701-60081 |
| A3A1A2TP2 | 1251-0600 | 0 | | CONNECTOR-SGL CONT PIN 1.14-MM-BSC-SZ SQ | 28480 | 1251-0600 |
| A3A1A2TP3 | 1251-0600 | 0 | | CONNECTOR-SGL CONT PIN 1.14-MM-BSC-SZ SQ | 28480 | 1251-0600 |
| A3A1A2TP4 | 1251-0600 | 0 | | CONNECTOR-SGL CONT PIN 1.14-MM-BSC-SZ SQ | 28480 | 1251-0600 |
| A3A1A2W1 | 86701-60031 | 7 | 1 | CABLE ASSEMBLY-GRAY/RED/WHITE | 28480 | 86701-60031 |
| A3A1A2Y1 | 0410-1086 | 5 | 1 | CRYSTAL-QUARTZ 100.00 MHZ HC-35/U-HLDR | 28480 | 0410-1086 |
| A3A1A3 | 86701-60077 | 1 | 1 | M/N PHASE DETECTOR ASSEMBLY | 28480 | 86701-60077 |
| A3A1A3C1 | 0160-4299 | 7 | | CAPACITOR-FXD 2200PF +-20% 250VDC CER | 56289 | C067F251F222MS22-CDH |
| A3A1A3C2 | 0160-4299 | 7 | | CAPACITOR-FXD 2200PF +-20% 250VDC CER | 56289 | C067F251F222MS22-CDH |
| A3A1A3C3 | 0160-4299 | 7 | | CAPACITOR-FXD 2200PF +-20% 250VDC CER | 56289 | C067F251F222MS22-CDH |
| A3A1A3C4 | 0180-1731 | 6 | 5 | CAPACITOR-FXD 4.7UF+-10% 50VDC TA | 56289 | 1S0D475X9050B2 |
| A3A1A3C5 | 0160-0157 | 8 | 2 | CAPACITOR-FXD 4700PF +-10% 200VDC POLYE | 28480 | 0160-0157 |
| A3A1A3C6 | 0160-0161 | 4 | 4 | CAPACITOR-FXD .01UF +-10% 200VDC POLYE | 28480 | 0160-0161 |
| A3A1A3C7 | 0160-0157 | 8 | | CAPACITOR-FXD 4700PF +-10% 200VDC POLYE | 28480 | 0160-0157 |
| A3A1A3C8 | 0160-3535 | 2 | 2 | CAPACITOR-FXD 560PF +-5% 300VDC MICA | 28480 | 0160-3535 |
| A3A1A3C9 | 0160-3535 | 2 | | CAPACITOR-FXD 560PF +-5% 300VDC MICA | 28480 | 0160-3535 |
| A3A1A3C10 | 0160-0161 | 4 | | CAPACITOR-FXD .01UF +-10% 200VDC POLYE | 28480 | 0160-0161 |
| A3A1A3C11 | 0160-4299 | 7 | | CAPACITOR-FXD 2200PF +-20% 250VDC CER | 56289 | C067F251F222MS22-CDH |
| A3A1A3C12 | 0160-4299 | 7 | | CAPACITOR-FXD 2200PF +-20% 250VDC CER | 56289 | C067F251F222MS22-CDH |
| A3A1A3C13 | 0160-4299 | 7 | | CAPACITOR-FXD 2200PF +-20% 250VDC CER | 56289 | C067F251F222MS22-CDH |
| A3A1A3C14 | 0160-2406 | 4 | 1 | CAPACITOR-FXD .27UF +-10% 80VDC POLYE | 28480 | 0160-2406 |
| A3A1A3C15 | 0160-3877 | 5 | 2 | CAPACITOR-FXD 100PF +-20% 200VDC CER | 28480 | 0160-3877 |
| A3A1A3C16 | 0140-0196 | 3 | | CAPACITOR-FXD 150PF +-5% 300VDC MICA | 72136 | DM15F151J0300WV1CR |
| A3A1A3C17 | 0160-2204 | 0 | | CAPACITOR-FXD 100PF +-5% 300VDC MICA | 28480 | 0160-2204 |
| A3A1A3C18 | 0160-4299 | 7 | | CAPACITOR-FXD 2200PF +-20% 250VDC CER | 56289 | C067F251F222MS22-CDH |
| A3A1A3C19 | 0160-4299 | 7 | | CAPACITOR-FXD 2200PF +-20% 250VDC CER | 56289 | C067F251F222MS22-CDH |
| A3A1A3C20 | 0160-3879 | 7 | | CAPACITOR-FXD .01UF +-20% 100VDC CER | 28480 | 0160-3879 |

See introduction to this section for ordering information
*Indicates factory selected value
†Backdating information in Section VII



www.valuetronics.com

A3

Table 6-3. Replaceable Parts

| Reference Designation | HP Part Number | C D | Qty | Description | Mfr Code | Mfr Part Number |
|---|---|---|---|---|---|---|
| A3A1A3C21 | 0160-4299 | 7 | | CAPACITOR-FXD 2200PF +-20% 250VDC CER | 56289 | C067F251F222MS22-CDH |
| A3A1A3C22 | 0160-4299 | 7 | | CAPACITOR-FXD 2200PF +-20% 250VDC CER | 56289 | C067F251F222MS22-CDH |
| A3A1A3C23 | 0160-3879 | 7 | | CAPACITOR-FXD .01UF +-20% 100VDC CER | 28480 | 0160-3879 |
| A3A1A3C24 | 0180-0291 | 3 | 1 | CAPACITOR-FXD 1UF+-10% 35VDC TA | 56289 | 150D105X9035A2 |
| A3A1A3C25 | 0180-0197 | 8 | | CAPACITOR-FXD 2.2UF+-10% 20VDC TA | 56289 | 150D225X9020A2 |
| A3A1A3C26 | 0160-3878 | 6 | | CAPACITOR-FXD 1000PF +-20% 100VDC CER | 28480 | 0160-3878 |
| A3A1A3L1 | 9100-1641 | 0 | 7 | INDUCTOR RF-CH-MLD 240UH 5% .166DX.385LG | 28480 | 9100-1641 |
| A3A1A3L2 | 9100-2259 | 8 | 2 | INDUCTOR RF-CH-MLD 1.5UH 10% .105DX.26LG | 28480 | 9100-2259 |
| A3A1A3L3 | 9100-1641 | 0 | | INDUCTOR RF-CH-MLD 240UH 5% .166DX.385LG | 28480 | 9100-1641 |
| A3A1A3L4 | 9100-2562 | 6 | 2 | INDUCTOR RF-CH-MLD 100UH 10% | 28480 | 9100-2562 |
| A3A1A3L5 | 9100-2562 | 6 | | INDUCTOR RF-CH-MLD 100UH 10% | 28480 | 9100-2562 |
| A3A1A3MP1 | 0520-0128 | 7 | 2 | SCREW-MACH 2-56 .25-IN-LG PAN-HD-POZI | 00000 | ORDER BY DESCRIPTION |
| A3A1A3MP2 | 0520-0175 | 4 | 1 | SCREW-MACH 2-56 .312-IN-LG PAN-HD-POZI | 00000 | ORDER BY DESCRIPTION |
| A3A1A3MP3 | 0590-0533 | 5 | 1 | THREADED INSERT-NUT 2-56 .06-IN-LG SST | 28480 | 0590-0533 |
| A3A1A3MP4 | 1205-0285 | 0 | 1 | HEAT SINK SGL DIP | 28480 | 1205-0285 |
| A3A1A3MP5 | | | | NOT ASSIGNED | | |
| A3A1A3MP6 | 2190-0124 | 4 | | WASHER-LK INTL T NO. 10 .195-IN-ID | 28480 | 2190-0124 |
| A3A1A3MP7 | 2200-0139 | 4 | | SCREW-MACH 4-40 .25-IN-LG PAN-HD-POZI | 28480 | 2200-0139 |
| A3A1A3MP8 | 2200-0103 | 2 | | SCREW-MACH 4-40 .25-IN-LG PAN-HD-POZI | 28480 | 2200-0103 |
| A3A1A3MP9 | 2950-0078 | 9 | | NUT-HEX-DBL-CHAM 10-32-THD .067-IN-THK | 28480 | 2950-0078 |
| A3A1A3MP10 | 6040-0239 | 9 | | LUBRICANT-GREASE SIL | 05820 | 120 |
| A3A1A3MP11 | 86701-00032 | 2 | 1 | BRACKET-HEAT SINK | 28480 | 86701-00032 |
| A3A1A3MP12 | 86701-00033 | 3 | 1 | BRACKET-HS | 28480 | 86701-00033 |
| A3A1A3MP13 | 86701-20038 | 0 | 1 | COVER-P.C. M/N DETECTOR | 28480 | 86701-20038 |
| A3A1A3MP14 | 86701-40001 | 9 | | EXTRACTOR-P.C. BOARD | 28480 | 86701-40001 |
| A3A1A3MP15 | 2190-0019 | 6 | | WASHER-LK HLCL NO. 4 .115-IN-ID | 28480 | 2190-0019 |
| A3A1A3MP16 | 2190-0890 | 1 | 10 | WASHER-LK HLCL NO. 2 .088-IN-ID | 28480 | 2190-0890 |
| A3A1A3Q1 | 1853-0451 | 5 | | TRANSISTOR PNP 2N3799 SI TO-18 PD=360MW | 01295 | 2N3799 |
| A3A1A3Q2 | 1853-0451 | 5 | | TRANSISTOR PNP 2N3799 SI TO-18 PD=360MW | 01295 | 2N3799 |
| A3A1A3R1 | 0698-3154 | 0 | | RESISTOR 4.22K 1% .125W F TC=0+-100 | 24546 | C4-1/8-TO-4221-F |
| A3A1A3R2 | 0698-3154 | 0 | | RESISTOR 4.22K 1% .125W F TC=0+-100 | 24546 | C4-1/8-TO-4221-F |
| A3A1A3R3 | | | | NOT ASSIGNED | | |
| A3A1A3R4 | 0698-7212 | 9 | | RESISTOR 100 1% .05W F TC=0+-100 | 24546 | C3-1/8-TO-100R-F |
| A3A1A3R5 | 0698-7219 | 6 | | RESISTOR 196 1% .05W F TC=0+-100 | 24546 | C3-1/8-TO-196R-F |
| A3A1A3R6 | | | | NOT ASSIGNED | | |
| A3A1A3R7 | 0698-7219 | 6 | | RESISTOR 196 1% .05W F TC=0+-100 | 24546 | C3-1/8-TO-196R-F |
| A3A1A3R8 | 0698-7212 | 9 | | RESISTOR 100 1% .05W F TC=0+-100 | 24546 | C3-1/8-TO-100R-F |
| A3A1A3R9 | 0698-7236 | 7 | | RESISTOR 1K 1% .05W F TC=0+-100 | 24546 | C3-1/8-TO-1001-F |
| A3A1A3R10 | 0698-7236 | 7 | | RESISTOR 1K 1% .05W F TC=0+-100 | 24546 | C3-1/8-TO-1001-F |
| A3A1A3R11 | 0698-3154 | 0 | | RESISTOR 4.22K 1% .125W F TC=0+-100 | 24546 | C4-1/8-TO-4221-F |
| A3A1A3R12 | 0757-0438 | 3 | | RESISTOR 5.11K 1% .125W F TC=0+-100 | 24546 | C4-1/8-TO-5111-F |
| A3A1A3R13 | 0698-3260 | 9 | 1 | RESISTOR 464K 1% .125W F TC=0+-100 | 28480 | 0698-3260 |
| A3A1A3R14 | 0757-0416 | 7 | | RESISTOR 511 1% .125W F TC=0+-100 | 24546 | C4-1/8-TO-511R-F |
| A3A1A3R15 | 0757-0416 | 7 | | RESISTOR 511 1% .125W F TC=0+-100 | 24546 | C4-1/8-TO-511R-F |
| A3A1A3R16 | 0757-0442 | 9 | | RESISTOR 10K 1% .125W F TC=0+-100 | 24546 | C4-1/8-TO-1002-F |
| A3A1A3R17 | 0757-0401 | 0 | | RESISTOR 100 1% .125W F TC=0+-100 | 24546 | C4-1/8-TO-101-F |
| A3A1A3R18 | 0757-0401 | 0 | | RESISTOR 100 1% .125W F TC=0+-100 | 24546 | C4-1/8-TO-101-F |
| A3A1A3R19 | 0757-0438 | 3 | | RESISTOR 5.11K 1% .125W F TC=0+-100 | 24546 | C4-1/8-TO-5111-F |
| A3A1A3R20 | 0698-3157 | 3 | | RESISTOR 19.6K 1% .125W F TC=0+-100 | 24546 | C4-1/8-TO-1962-F |
| A3A1A3R21 | 0757-0438 | 3 | | RESISTOR 5.11K 1% .125W F TC=0+-100 | 24546 | C4-1/8-TO-5111-F |
| A3A1A3R22 | 0698-3154 | 0 | | RESISTOR 4.22K 1% .125W F TC=0+-100 | 24546 | C4-1/8-TO-4221-F |
| A3A1A3R23 | 0698-3450 | 9 | | RESISTOR 42.2K 1% .125W F TC=0+-100 | 24546 | C4-1/8-TO-4222-F |
| A3A1A3R24 | 0698-3450 | 9 | | RESISTOR 42.2K 1% .125W F TC=0+-100 | 24546 | C4-1/8-TO-4222-F |
| A3A1A3R25 | 0698-0083 | 8 | | RESISTOR 1.96K 1% .125W F TC=0+-100 | 24546 | C4-1/8-TO-1961-F |
| A3A1A3R26 | 0757-0401 | 0 | | RESISTOR 100 1% .125W F TC=0+-100 | 24546 | C4-1/8-TO-101-F |
| A3A1A3R27 | 0757-0438 | 3 | | RESISTOR 5.11K 1% .125W F TC=0+-100 | 24546 | C4-1/8-TO-5111-F |
| A3A1A3R28 | 0757-0438 | 3 | | RESISTOR 5.11K 1% .125W F TC=0+-100 | 24546 | C4-1/8-TO-5111-F |
| A3A1A3TP1 | 1251-0600 | 0 | | CONNECTOR-SGL CONT PIN 1.14-MM-BSC-SZ SQ | 28480 | 1251-0600 |
| A3A1A3TP2 | 1251-0600 | 0 | | CONNECTOR-SGL CONT PIN 1.14-MM-BSC-SZ SQ | 28480 | 1251-0600 |
| A3A1A3TP3 | 1251-0600 | 0 | | CONNECTOR-SGL CONT PIN 1.14-MM-BSC-SZ SQ | 28480 | 1251-0600 |
| A3A1A3TP4 | 1251-0600 | 0 | | CONNECTOR-SGL CONT PIN 1.14-MM-BSC-SZ SQ | 28480 | 1251-0600 |
| A3A1A3TP5 | 1251-0600 | 0 | | CONNECTOR-SGL CONT PIN 1.14-MM-BSC-SZ SQ | 28480 | 1251-0600 |

See introduction to this section for ordering information
*Indicates factory selected value
†Backdating information in Section VII



www.valuetronics.com

Table 6-3. Replaceable Parts

| Reference Designation | HP Part Number | C D | Qty | Description | Mfr Code | Mfr Part Number |
|---|---|---|---|---|---|---|
| A3A1A3TP6 | 1251-0600 | 0 | | CONNECTOR-SGL CONT PIN 1.14-MM-BSC-SZ SQ | 28480 | 1251-0600 |
| A3A1A3TP7 | 1251-0600 | 0 | | CONNECTOR-SGL CONT PIN 1.14-MM-BSC-SZ SQ | 28480 | 1251-0600 |
| A3A1A3TP8 | 1251-0600 | 0 | | CONNECTOR-SGL CONT PIN 1.14-MM-BSC-SZ SQ | 28480 | 1251-0600 |
| A3A1A3TP9 | 1251-0600 | 0 | | CONNECTOR-SGL CONT PIN 1.14-MM-BSC-SZ SQ | 28480 | 1251-0600 |
| A3A1A3TP10 | 1251-0600 | 0 | | CONNECTOR-SGL CONT PIN 1.14-MM-BSC-SZ SQ | 28480 | 1251-0600 |
| A3A1A3TP11 | 1251-0600 | 0 | | CONNECTOR-SGL CONT PIN 1.14-MM-BSC-SZ SQ | 28480 | 1251-0600 |
| A3A1A3U1 | 1820-1344 | 8 | 2 | IC PL LOOP 14-DIP-C PKG | 04713 | MC12040L |
| A3A1A3U2 | 1820-1225 | 4 | 2 | IC FF ECL D-M/S DUAL | 04713 | MC10231P |
| A3A1A3U3 | 1820-0802 | 1 | | IC GATE ECL NOR QUAD 2-INP | 04713 | MC10102P |
| A3A1A3U4 | 1820-0820 | 3 | 2 | IC FF ECL J-BAR K-BAR COM CLOCK DUAL | 04713 | MC10135L |
| A3A1A3U5 | 1810-0251 | 3 | 3 | NETWORK-RES 10-SIP MULTI-VALUE | 28480 | 1810-0251 |
| A3A1A3U6 | 1810-0204 | 6 | 7 | NETWORK-RES 8-SIP1.0K OHM X 7 | 01121 | 208A102 |
| A3A1A3U7 | 1826-0092 | 3 | 4 | IC OP AMP GP DUAL TO-99 PKG | 28480 | 1826-0092 |
| A3A1A3U8 | 1820-0821 | 4 | 2 | IC CNTR ECL BIN UP/DOWN SYNCHRO | 04713 | MC10136L |
| A3A1A3U9 | 1810-0204 | 6 | | NETWORK-RES 8-SIP1.0K OHM X 7 | 01121 | 208A102 |
| A3A1A3U10 | 1810-0204 | 6 | | NETWORK-RES 8-SIP1.0K OHM X 7 | 01121 | 208A102 |
| A3A1A3U11 | 1820-0806 | 5 | 2 | IC GATE ECL OR-NOR DUAL 4-5-INP | 04713 | MC10109P |
| A3A1A3U12 | 1820-0802 | 1 | | IC GATE ECL NOR QUAD 2-INP | 04713 | MC10102P |
| A3A1A3U13 | 1820-1225 | 4 | | IC FF ECL D-M/S DUAL | 04713 | MC10231P |
| A3A1A3U14 | 1810-0251 | 3 | | NETWORK-RES 10-SIP MULTI-VALUE | 28480 | 1810-0251 |
| A3A1A3U15 | 1826-0059 | 2 | 1 | IC OP AMP GP TO-99 PKG | 01295 | LM201AL |
| A3A1A3U16 | 1810-0204 | 6 | | NETWORK-RES 8-SIP1.0K OHM X 7 | 01121 | 208A102 |
| A3A1A3U17 | 1820-0802 | 1 | | IC GATE ECL NOR QUAD 2-INP | 04713 | MC10102P |
| A3A1A3U18 | 1820-0820 | 3 | | IC FF ECL J-BAR K-BAR COM CLOCK DUAL | 04713 | MC10135L |
| A3A1A3U19 | 1820-0821 | 4 | | IC CNTR ECL BIN UP/DOWN SYNCHRO | 04713 | MC10136L |
| A3A1A3U20 | 1810-0204 | 6 | | NETWORK-RES 8-SIP1.0K OHM X 7 | 01121 | 208A102 |
| A3A1A3U21 | 1810-0204 | 6 | | NETWORK-RES 8-SIP1.0K OHM X 7 | 01121 | 208A102 |
| A3A1A3U22 | 1810-0251 | 3 | | NETWORK-RES 10-SIP MULTI-VALUE | 28480 | 1810-0251 |
| A3A1A3U23 | 1820-0806 | 5 | | IC GATE ECL OR-NOR DUAL 4-5-INP | 04713 | MC10109P |
| A3A1A3U24 | 1820-0802 | 1 | | IC GATE ECL NOR QUAD 2-INP | 04713 | MC10102P |
| A3A1A3VR1 | 1902-3082 | 9 | | DIODE-ZNR 4.64V 5% DO-35 PD=.4W | 28480 | 1902-3082 |
| A3A1A3W1 | 86701-60051 | 1 | 1 | CABLE ASSEMBLY- WHITE/RED | 28480 | 86701-60051 |
| A3A1A3W2 | 86701-60060 | 2 | 1 | CABLE ASSEMBLY-GRAY/WHITE | 28480 | 86701-60060 |
| A3A1A4 | 86701-60065 | 7 | 1 | M/N VCO ASSEMBLY | 28480 | 86701-60065 |
| A3A1A4 | 86701-60071 | 5 | 1 | M/N VCO ASSEMBLY (RESTORED 86701-60065) | 28480 | 86701-60071 |
| A3A1A4MP1 | 0362-0227 | 1 | 1 | CONNECTOR-SGL CONT SKT 1.14-MM-BSC-SZ | 28480 | 0362-0227 |
| A3A1A4MP2 | 0520-0165 | 2 | 1 | SCREW-MACH 2-56 .312-IN-LG 82 DEG | 00000 | ORDER BY DESCRIPTION |
| A3A1A4MP3 | 2200-0103 | 2 | | SCREW-MACH 4-40 .25-IN-LG PAN-HD-POZI | 28480 | 2200-0103 |
| A3A1A4MP4 | 2200-0167 | 8 | 2 | SCREW-MACH 4-40 .375-IN-LG 82 DEG | 28480 | 2200-0167 |
| A3A1A4A1 | 86701-60029 | 3 | 1 | VCO RESONATOR ASSY (INCLUDES A3A1A4A2) | 28480 | 86701-60029 |
| A3A1A4A2 | 86701-60027 | 1 | 1 | BOARD ASSEMBLY-M/N VCO | 28480 | 86701-60027 |
| A3A1A4A2C1 | 0160-3878 | 6 | | CAPACITOR-FXD 1000PF +-20% 100VDC CER | 28480 | 0160-3878 |
| A3A1A4A2C2 | 0160-3878 | 6 | | CAPACITOR-FXD 1000PF +-20% 100VDC CER | 28480 | 0160-3878 |
| A3A1A4A2C3 | 0160-3879 | 7 | | CAPACITOR-FXD .01UF +-20% 100VDC CER | 28480 | 0160-3879 |
| A3A1A4A2C4 | 0160-3878 | 6 | | CAPACITOR-FXD 1000PF +-20% 100VDC CER | 28480 | 0160-3878 |
| A3A1A4A2C5 | 0180-0116 | 1 | | CAPACITOR-FXD 6.8UF+-10% 35VDC TA | 56289 | 150D685X9035B2 |
| A3A1A4A2C6 | 0160-3878 | 6 | | CAPACITOR-FXD 1000PF +-20% 100VDC CER | 28480 | 0160-3878 |
| A3A1A4A2C7 | 0160-3878 | 6 | | CAPACITOR-FXD 1000PF +-20% 100VDC CER | 28480 | 0160-3878 |
| A3A1A4A2C8 | 0160-3873 | 1 | 1 | CAPACITOR-FXD 4.7PF +-.5PF 200VDC CER | 28480 | 0160-3873 |
| A3A1A4A2C9 | 0160-3878 | 6 | | CAPACITOR-FXD 1000PF +-20% 100VDC CER | 28480 | 0160-3878 |
| A3A1A4A2C10 | 0160-3879 | 7 | | CAPACITOR-FXD .01UF +-20% 100VDC CER | 28480 | 0160-3879 |
| A3A1A4A2C11 | 0180-2161 | 0 | 1 | CAPACITOR-FXD .75UF+-10% 50VDC TA | 56289 | 150D754X9050A2 |
| A3A1A4A2L1 | 9140-0770 | 8 | 4 | INDUCTOR RF-CH-MLD 50NH 10% 105DX.26LG | 28480 | 9140-0770 |
| A3A1A4A2L2 | 9140-0770 | 8 | | INDUCTOR RF-CH-MLD 50NH 10% 105DX.26LG | 28480 | 9140-0770 |
| A3A1A4A2L3 | 86701-20051 | 7 | 1 | INDUCTOR | 28480 | 86701-20051 |
| A3A1A4A2L4 | 9140-0158 | 6 | | INDUCTOR RF-CH-MLD 1UH 10% .105DX.26LG | 28480 | 9140-0158 |
| A3A1A4A2Q1 | 1854-0610 | 0 | 1 | TRANSISTOR NPN SI TO-46 FT=800MHZ | 28480 | 1854-0610 |
| A3A1A4A2Q2 | 1854-0686 | 0 | 1 | TRANSISTOR NPN SI TO-72 PD=200MW FT=4GHZ | 28480 | 1854-0686 |
| A3A1A4A2R1 | 0757-0280 | 3 | | RESISTOR 1K 1% .125W F TC=0+-100 | 24546 | C4-1/8-T0-1001-F |
| A3A1A4A2R2 | 0698-7219 | 8 | | RESISTOR 196 1% .05W F TC=0+-100 | 24546 | C3-1/8-T0-196R-F |

See introduction to this section for ordering information
*Indicates factory selected value
†Backdating information in Section VII



www.valuetronics.com

A3

Table 6-3. Replaceable Parts

| Reference Designation | HP Part Number | CD | Qty | Description | Mfr Code | Mfr Part Number |
|---|---|---|---|---|---|---|
| A3A1A4A2R3 | 0698-7193 | 5 | 1 | RESISTOR 16.2 1% .05W F TC=0+-100 | 24546 | C3-1/8-T0-16R2-F |
| A3A1A4A2R4 | 0698-3154 | 0 | | RESISTOR 4.22K 1% .125W F TC=0+-100 | 24546 | C4-1/8-T0-4221-F |
| A3A1A4A2R5 | 0757-0428 | 1 | 6 | RESISTOR 1.62K 1% .125W F TC=0+-100 | 24546 | C4-1/8-T0-1621-F |
| A3A1A4A2R6 | 0698-7262 | 9 | 1 | RESISTOR 12.1K 1% .05W F TC=0+-100 | 24546 | C3-1/8-T0-1212-F |
| A3A1A4A2R7 | 0757-0428 | 1 | | RESISTOR 1.62K 1% .125W F TC=0+-100 | 24546 | C4-1/8-T0-1621-F |
| A3A1A4A2R8 | 0698-7254 | 9 | 1 | RESISTOR 5.62K 1% .05W F TC=0+-100 | 24546 | C3-1/8-T0-5621-F |
| A3A1A4A2R9 | 0698-7205 | 0 | | RESISTOR 51.1 1% .05W F TC=0+-100 | 24546 | C3-1/8-T0-51R1-F |
| A3A1A4A2R10 | 0698-7265 | 2 | 1 | RESISTOR 16.2K 1% .05W F TC=0+-100 | 24546 | C3-1/8-T0-1622-F |
| A3A1A4A2R11 | 0698-7250 | 5 | 1 | RESISTOR 3.83K 1% .05W F TC=0+-100 | 24546 | C3-1/8-T0-3831-F |
| A3A1A4A2R12 | 0757-0401 | 0 | | RESISTOR 100 1% .125W F TC=0+-100 | 24546 | C4-1/8-T0-101-F |
| A3A1A4A2R13 | 0757-0400 | 9 | 1 | RESISTOR 90.9 1% .125W F TC=0+-100 | 24546 | C4-1/8-T0-90R9-F |
| A3A1A4A2TP1 | 1251-0600 | 0 | | CONNECTOR-SGL CONT PIN 1.14-MM-BSC-SZ SQ | 28480 | 1251-0600 |
| A3A1A4A2TP2 | 1251-0600 | 0 | | CONNECTOR-SGL CONT PIN 1.14-MM-BSC-SZ SQ | 28480 | 1251-0600 |
| A3A1A4A2TP3 | 1251-0600 | 0 | | CONNECTOR-SGL CONT PIN 1.14-MM-BSC-SZ SQ | 28480 | 1251-0600 |
| A3A1A4A2W1 | 86701-60058 | 8 | 1 | CABLE ASSEMBLY-VCO OUTPUT | 28480 | 86701-60058 |
| A3A1A4A2W2 | 86701-20050 | 6 | 1 | CABLE- S/R JUMPER | 28480 | 86701-20050 |
| A3A1A4A2MP1 | 0590-0526 | 6 | | THREADED INSERT-NUT 4-40 .065-IN-LG SST | 28480 | 0590-0526 |
| A3A1A4A2MP2 | 86701-20052 | 8 | 1 | SPACER-INSULATOR | 28480 | 86701-20052 |
| A3A1A4A2MP3 | 1251-2313 | 6 | | CONNECTOR-SGL CONT SKT .04-IN-BSC-SZ RND | 28480 | 1251-2313 |
| A3A1A5 | 86701-60018 | 0 | 1 | M/N OUTPUT ASSEMBLY | 28480 | 86701-60018 |
| A3A1A5C1 | 0160-3878 | 6 | | CAPACITOR-FXD 1000PF +-20% 100VDC CER | 28480 | 0160-3878 |
| A3A1A5C2 | 0160-3878 | 6 | | CAPACITOR-FXD 1000PF +-20% 100VDC CER | 28480 | 0160-3878 |
| A3A1A5C3 | 0160-2255 | 1 | 1 | CAPACITOR-FXD 8.2PF +-.25PF 500VDC CER | 28480 | 0160-2255 |
| A3A1A5C4 | 0160-3878 | 6 | | CAPACITOR-FXD 1000PF +-20% 100VDC CER | 28480 | 0160-3878 |
| A3A1A5C5 | 0160-3878 | 6 | | CAPACITOR-FXD 1000PF +-20% 100VDC CER | 28480 | 0160-3878 |
| A3A1A5C6 | | | | NOT ASSIGNED | | |
| A3A1A5C7 | 0160-3878 | 6 | | CAPACITOR-FXD 1000PF +-20% 100VDC CER | 28480 | 0160-3878 |
| A3A1A5C8 | 0140-0192 | 9 | 2 | CAPACITOR-FXD 68PF +-5% 300VDC MICA | 72136 | DM15E680J0300WV1CR |
| A3A1A5C9 | 0160-2204 | 0 | | CAPACITOR-FXD 100PF +-5% 300VDC MICA | 28480 | 0160-2204 |
| A3A1A5C10 | 0160-2055 | 9 | | CAPACITOR-FXD .01UF +80-20% 100VDC CER | 28480 | 0160-2055 |
| A3A1A5C11 | 0160-3879 | 7 | | CAPACITOR-FXD .01UF +-20% 100VDC CER | 28480 | 0160-3879 |
| A3A1A5C12 | 0160-3879 | 7 | | CAPACITOR-FXD .01UF +-20% 100VDC CER | 28480 | 0160-3879 |
| A3A1A5C13 | 0160-3879 | 7 | | CAPACITOR-FXD .01UF +-20% 100VDC CER | 28480 | 0160-3879 |
| A3A1A5C14 | 0160-3878 | 6 | | CAPACITOR-FXD 1000PF +-20% 100VDC CER | 28480 | 0160-3878 |
| A3A1A5C15 | 0160-3451 | 1 | 8 | CAPACITOR-FXD .01UF +80-20% 100VDC CER | 28480 | 0160-3451 |
| A3A1A5C16 | 0160-3878 | 6 | | CAPACITOR-FXD 1000PF +-20% 100VDC CER | 28480 | 0160-3878 |
| A3A1A5C17 | 0160-3878 | 6 | | CAPACITOR-FXD 1000PF +-20% 100VDC CER | 28480 | 0160-3878 |
| A3A1A5C18 | 0160-2257 | 3 | 1 | CAPACITOR-FXD 10PF +-5% 500VDC CER 0+-60 | 28480 | 0160-2257 |
| A3A1A5C19 | 0160-2199 | 2 | | CAPACITOR-FXD 30PF +-5% 300VDC MICA | 28480 | 0160-2199 |
| A3A1A5C20 | 0160-3878 | 6 | | CAPACITOR-FXD 1000PF +-20% 100VDC CER | 28480 | 0160-3878 |
| A3A1A5C21 | 0160-3878 | 6 | | CAPACITOR-FXD 1000PF +-20% 100VDC CER | 28480 | 0160-3878 |
| A3A1A5C22 | 0160-2266 | 4 | 1 | CAPACITOR-FXD 24PF +-5% 500VDC CER 0+-30 | 28480 | 0160-2266 |
| A3A1A5C23 | | | | NOT ASSIGNED | | |
| A3A1A5C24 | 0160-0161 | 4 | | CAPACITOR-FXD .01UF +-10% 200VDC POLYE | 28480 | 0160-0161 |
| A3A1A5C25 | 0160-0153 | 4 | 1 | CAPACITOR-FXD 1000PF +-10% 200VDC POLYE | 28480 | 0160-0153 |
| A3A1A5C26 | 0160-0161 | 4 | | CAPACITOR-FXD .01UF +-10% 200VDC POLYE | 28480 | 0160-0161 |
| A3A1A5C27 | 0160-3534 | 1 | 1 | CAPACITOR-FXD 510PF +-5% 100VDC MICA | 28480 | 0160-3534 |
| A3A1A5C28 | 0160-0298 | 8 | 1 | CAPACITOR-FXD 1500PF +-10% 200VDC POLYE | 28480 | 0160-0298 |
| A3A1A5C29 | 0180-0197 | 8 | | CAPACITOR-FXD 2.2UF+-10% 20VDC TA | 56289 | 150D225X9020A2 |
| A3A1A5C30 | 0160-2055 | 9 | | CAPACITOR-FXD .01UF +80-20% 100VDC CER | 28480 | 0160-2055 |
| A3A1A5C31 | 0180-0197 | 8 | | CAPACITOR-FXD 2.2UF+-10% 20VDC TA | 56289 | 150D225X9020A2 |
| A3A1A5C32 | 0160-3878 | 6 | | CAPACITOR-FXD 1000PF +-20% 100VDC CER | 28480 | 0160-3878 |
| A3A1A5C33 | 0160-3878 | 6 | | CAPACITOR-FXD 1000PF +-20% 100VDC CER | 28480 | 0160-3878 |
| A3A1A5C34 | 0160-3878 | 6 | | CAPACITOR-FXD 1000PF +-20% 100VDC CER | 28480 | 0160-3878 |
| A3A1A5C35 | 0160-3878 | 6 | | CAPACITOR-FXD 1000PF +-20% 100VDC CER | 28480 | 0160-3878 |
| A3A1A5C36 | 0140-0192 | 9 | | CAPACITOR-FXD 68PF +-5% 300VDC MICA | 72136 | DM15E680J0300WV1CR |
| A3A1A5C37 | 0160-4351 | 2 | 1 | CAPACITOR-FDTHRU 1000PF 20% 200V CER | 28480 | 0160-4351 |
| A3A1A5C38* | 0160-2306 | 3 | 1 | CAPACITOR-FXD 27PF +-5% 300VDC MICA | 28480 | 0160-2306 |
| A3A1A5J1 | 1250-0657 | 5 | 3 | CONNECTOR-RF SMB M SGL-HOLE-FR 50-OHM | 28480 | 1250-0657 |
| A3A1A5J2 | 1250-0657 | 5 | | CONNECTOR-RF SMB M SGL-HOLE-FR 50-OHM | 28480 | 1250-0657 |
| A3A1A5J3 | 1250-0657 | 5 | | CONNECTOR-RF SMB M SGL-HOLE-FR 50-OHM | 28480 | 1250-0657 |
| A3A1A5J4 | 1250-1255 | 1 | 1 | CONNECTOR-RF SMB M PC 50-OHM | 28480 | 1250-1255 |

See introduction to this section for ordering information
*Indicates factory selected value
†Backdating information in Section VII



www.valuetronics.com

Table 6-3. Replaceable Parts

| Reference Designation | HP Part Number | C D | Qty | Description | Mfr Code | Mfr Part Number |
|---|---|---|---|---|---|---|
| A3A1A5L1 | 9140-0770 | 8 | | INDUCTOR RF-CH-MLD 50NH 10% 105DX.26LG | 28480 | 9140-0770 |
| A3A1A5L2 | 9135-0081 | 3 | 1 | INDUCTOR RF-CH-MLD 68NH 5% .102DX.26LG | 28480 | 9135-0081 |
| A3A1A5L3 | | | | NOT ASSIGNED | | |
| A3A1A5L4 | 9100-2248 | 5 | 2 | INDUCTOR RF-CH-MLD 120NH 10% .105DX.26LG | 28480 | 9100-2248 |
| A3A1A5L5 | 9140-0771 | 9 | 2 | INDUCTOR RF-CH-MLD 51NH 5% .102DX.26LG | 28480 | 9140-0771 |
| A3A1A5L6 | 9100-1635 | 2 | 1 | INDUCTOR RF-CH-MLD 91UH 5% .166DX.385LG | 28480 | 9100-1635 |
| A3A1A5L7 | 9100-1634 | 1 | 1 | INDUCTOR RF-CH-MLD 75UH 5% .166DX.385LG | 28480 | 9100-1634 |
| A3A1A5L8 | 9100-1620 | 5 | 4 | INDUCTOR RF-CH-MLD 15UH 10% .166DX.385LG | 28480 | 9100-1620 |
| A3A1A5L9 | 9140-0210 | 1 | 1 | INDUCTOR RF-CH-MLD 100UH 5% .166DX.385LG | 28480 | 9140-0210 |
| A3A1A5L10 | 9140-0771 | 9 | | INDUCTOR RF-CH-MLD 51NH 5% .102DX.26LG | 28480 | 9140-0771 |
| A3A1A5L11 | 9100-2248 | 5 | | INDUCTOR RF-CH-MLD 120NH 10% .105DX.26LG | 28480 | 9100-2248 |
| A3A1A5MP1 | 0360-0452 | 0 | 1 | TERMINAL-SLDR LUG PL-MTG FOR-#10-SCR | 28480 | 0360-0452 |
| A3A1A5MP2 | 2190-0009 | 4 | 1 | WASHER-LK INTL T NO. 8 .168-IN-ID | 28480 | 2190-0009 |
| A3A1A5MP3 | 2190-0124 | 4 | | WASHER-LK INTL T NO. 10 .195-IN-ID | 28480 | 2190-0124 |
| A3A1A5MP4 | 2200-0101 | 0 | 1 | SCREW-MACH 4-40 .188-IN-LG PAN-HD-POZI | 00000 | ORDER BY DESCRIPTION |
| A3A1A5MP5 | 2200-0103 | 2 | | SCREW-MACH 4-40 .25-IN-LG PAN-HD-POZI | 28480 | 2200-0103 |
| A3A1A5MP6 | 2200-0167 | 8 | | SCREW-MACH 4-40 .375-IN-LG 82 DEG | 28480 | 2200-0167 |
| A3A1A5MP7 | 2580-0002 | 4 | | NUT-HEX-DBL-CHAM 8-32-THD .085-IN-THK | 28480 | 2580-0002 |
| A3A1A5MP8 | 86701-20056 | 2 | 1 | COVER (BOTTOM) | 28480 | 86701-20056 |
| A3A1A5MP9 | 86701-00041 | 3 | 1 | COVER (TOP) | 28480 | 86701-00041 |
| A3A1A5MP10 | 86701-40001 | 9 | | EXTRACTOR-P.C. BOARD | 28480 | 86701-40001 |
| A3A1A5MP11 | 86701-20037 | 9 | 1 | COVER-P.C. M/N MOUNT | 28480 | 86701-20037 |
| A3A1A5MP12 | 86701-20057 | 3 | 1 | SHIELD-HOUSING | 28480 | 86701-20057 |
| A3A1A5MP13 | 86701-00061 | 7 | 1 | GROUND STRAP | 28480 | 86701-00061 |
| A3A1A5MP14 | 2190-0019 | 6 | | WASHER-LK HLCL NO. 4 .115-IN-ID | 28480 | 2190-0019 |
| A3A1A5MP15 | 2200-0139 | 4 | | SCREW-MACH 4-40 .25-IN-LG PAN-HD-POZI | 28480 | 2200-0139 |
| A3A1A5MP16 | 3050-0079 | 3 | 3 | WASHER-FL NM NO. 2 .094-IN-ID .188-IN-OD | 28480 | 3050-0079 |
| A3A1A5MP17 | 2950-0078 | 9 | | NUT-HEX-DBL-CHAM 10-32-THD .067-IN-THK | 28480 | 2950-0078 |
| A3A1A5Q1 | 1854-0345 | 8 | | TRANSISTOR NPN 2N5179 SI TO-72 PD=200MW | 04713 | 2N5179 |
| A3A1A5Q2 | 1853-0015 | 7 | 2 | TRANSISTOR PNP SI PD=200MW FT=500MHZ | 28480 | 1853-0015 |
| A3A1A5Q3 | 1854-0345 | 8 | | TRANSISTOR NPN 2N5179 SI TO-72 PD=200MW | 04713 | 2N5179 |
| A3A1A5Q4 | 1854-0345 | 8 | | TRANSISTOR NPN 2N5179 SI TO-72 PD=200MW | 04713 | 2N5179 |
| A3A1A5Q5 | 1854-0546 | 1 | 5 | TRANSISTOR NPN SI TO-72 PD=200MW | 28480 | 1854-0546 |
| A3A1A5Q6 | 1854-0546 | 1 | | TRANSISTOR NPN SI TO-72 PD=200MW | 28480 | 1854-0546 |
| A3A1A5Q7 | 1854-0546 | 1 | | TRANSISTOR NPN SI TO-72 PD=200MW | 28480 | 1854-0546 |
| A3A1A5Q8 | 1854-0546 | 1 | | TRANSISTOR NPN SI TO-72 PD=200MW | 28480 | 1854-0546 |
| A3A1A5Q9 | 1854-0546 | 1 | | TRANSISTOR NPN SI TO-72 PD=200MW | 28480 | 1854-0546 |
| A3A1A5R1 | 0698-7212 | 9 | | RESISTOR 100 1% .05W F TC=0+-100 | 24546 | C3-1/8-T0-100R-F |
| A3A1A5R2 | 0698-7248 | 1 | 5 | RESISTOR 3.16K 1% .05W F TC=0+-100 | 24546 | C3-1/8-T0-3161-F |
| A3A1A5R3 | 0698-7243 | 6 | 5 | RESISTOR 1.96K 1% .05W F TC=0+-100 | 24546 | C3-1/8-T0-1961-F |
| A3A1A5R4 | 0698-7205 | 0 | | RESISTOR 51.1 1% .05W F TC=0+-100 | 24546 | C3-1/8-T0-51R1-F |
| A3A1A5R5 | 0698-7223 | 2 | 3 | RESISTOR 287 1% .05W F TC=0+-100 | 24546 | C3-1/8-T0-287R-F |
| A3A1A5R6 | 0698-7248 | 1 | | RESISTOR 3.16K 1% .05W F TC=0+-100 | 24546 | C3-1/8-T0-3161-F |
| A3A1A5R7 | 0698-7243 | 6 | | RESISTOR 1.96K 1% .05W F TC=0+-100 | 24546 | C3-1/8-T0-1961-F |
| A3A1A5R8 | 0698-7203 | 8 | 1 | RESISTOR 42.2 1% .05W F TC=0+-100 | 24546 | C3-1/8-T0-42R2-F |
| A3A1A5R9 | 0698-7218 | 5 | 1 | RESISTOR 178 1% .05W F TC=0+-100 | 24546 | C3-1/8-T0-178R-F |
| A3A1A5R10 | 0698-7188 | 8 | 5 | RESISTOR 10 1% .05W F TC=0+-100 | 24546 | C3-1/8-T0-10R-F |
| A3A1A5R11 | 0698-7205 | 0 | | RESISTOR 51.1 1% .05W F TC=0+-100 | 24546 | C3-1/8-T0-51R1-F |
| A3A1A5R12 | 0698-7248 | 1 | | RESISTOR 3.16K 1% .05W F TC=0+-100 | 24546 | C3-1/8-T0-3161-F |
| A3A1A5R13 | 0698-7243 | 6 | | RESISTOR 1.96K 1% .05W F TC=0+-100 | 24546 | C3-1/8-T0-1961-F |
| A3A1A5R14 | 0698-7188 | 8 | | RESISTOR 10 1% .05W F TC=0+-100 | 24546 | C3-1/8-T0-10R-F |
| A3A1A5R15 | 0698-7219 | 6 | | RESISTOR 196 1% .05W F TC=0+-100 | 24546 | C3-1/8-T0-196R-F |
| A3A1A5R16 | 0698-7188 | 8 | | RESISTOR 10 1% .05W F TC=0+-100 | 24546 | C3-1/8-T0-10R-F |
| A3A1A5R17 | 0698-7212 | 9 | | RESISTOR 100 1% .05W F TC=0+-100 | 24546 | C3-1/8-T0-100R-F |
| A3A1A5R18 | 0698-7208 | 3 | 1 | RESISTOR 68.1 1% .05W F TC=0+-100 | 24546 | C3-1/8-T0-68R1-F |
| A3A1A5R19 | 0698-7212 | 9 | | RESISTOR 100 1% .05W F TC=0+-100 | 24546 | C3-1/8-T0-100R-F |
| A3A1A5R20 | 0698-7222 | 1 | | RESISTOR 261 1% .05W F TC=0+-100 | 24546 | C3-1/8-T0-261R-F |
| A3A1A5R21 | 0698-7223 | 2 | | RESISTOR 287 1% .05W F TC=0+-100 | 24546 | C3-1/8-T0-287R-F |
| A3A1A5R22 | 0698-7188 | 8 | | RESISTOR 10 1% .05W F TC=0+-100 | 24546 | C3-1/8-T0-10R-F |
| A3A1A5R23 | 0698-7229 | 8 | 3 | RESISTOR 511 1% .05W F TC=0+-100 | 24546 | C3-1/8-T0-511R-F |
| A3A1A5R24 | 0698-7212 | 9 | | RESISTOR 100 1% .05W F TC=0+-100 | 24546 | C3-1/8-T0-100R-F |
| A3A1A5R25 | 0698-7247 | 0 | 1 | RESISTOR 2.87K 1% .05W F TC=0+-100 | 24546 | C3-1/8-T0-2871-F |

A3

See introduction to this section for ordering information
*Indicates factory selected value
†Backdating information in Section VII



www.valuetronics.com

A3

Table 6-3. Replaceable Parts

| Reference Designation | HP Part Number | C D | Qty | Description | Mfr Code | Mfr Part Number |
|---|---|---|---|---|---|---|
| A3A1A5R26 | 0698-7243 | 6 | | RESISTOR 1.96K 1% .05W F TC=0+-100 | 24546 | C3-1/8-T0-1961-F |
| A3A1A5R27 | 0698-7248 | 1 | | RESISTOR 3.16K 1% .05W F TC=0+-100 | 24546 | C3-1/8-T0-3161-F |
| A3A1A5R28 | 0698-7229 | 8 | | RESISTOR 511 1% .05W F TC=0+-100 | 24546 | C3-1/8-T0-511R-F |
| A3A1A5R29 | 0698-7243 | 6 | | RESISTOR 1.96K 1% .05W F TC=0+-100 | 24546 | C3-1/8-T0-1961-F |
| A3A1A5R30 | 0698-7200 | 5 | 1 | RESISTOR 31.6 1% .05W F TC=0+-100 | 24546 | C3-1/8-T0-31R6-F |
| A3A1A5R31 | 0698-7224 | 3 | | RESISTOR 316 1% .05W F TC=0+-100 | 24546 | C3-1/8-T0-316R-F |
| A3A1A5R32 | 0698-7188 | 8 | | RESISTOR 10 1% .05W F TC=0+-100 | 24546 | C3-1/8-T0-10R-F |
| A3A1A5R33 | 0757-0280 | 3 | | RESISTOR 1K 1% .125W F TC=0+-100 | 24546 | C4-1/8-T0-1001-F |
| A3A1A5R34 | 0757-0279 | 0 | | RESISTOR 3.16K 1% .125W F TC=0+-100 | 24546 | C4-1/8-T0-3161-F |
| A3A1A5R35 | | | | NOT ASSIGNED | | |
| A3A1A5R36* | 0698-7210 | 7 | 1 | RESISTOR 82.5 1% .05W F TC=0+-100 | 24546 | C3-1/8-T0-82R5-F |
| A3A1A5R37 | 0698-7223 | 2 | | RESISTOR 287 1% .05W F TC=0+-100 | 24546 | C3-1/8-T0-287R-F |
| A3A1A5R38 | | | | NOT ASSIGNED | | |
| A3A1A5R39 | 0698-7248 | 1 | | RESISTOR 3.16K 1% .05W F TC=0+-100 | 24546 | C3-1/8-T0-3161-F |
| A3A1A5R40* | 0698-7205 | 0 | 5 | RESISTOR 51.1 1% .05W F TC=0+-100 | 24546 | C3-1/8-T0-51R1-F |
| A3A1A5R41* | 0698-7212 | 9 | 12 | RESISTOR 100 1% .05W F TC=0+-100 | 24546 | C3-1/8-T0-100R-F |
| A3A1A5R42 | 0698-7205 | 0 | | RESISTOR 51.1 1% .05W F TC=0+-100 | 24546 | C3-1/8-T0-51R1-F |
| A3A1A5U1 | 0955-0063 | 0 | 1 | MIXER-DOUBLE BALANCE | 28480 | 0955-0063 |
| A3A1A5U2 | 1820-2642 | 1 | 1 | IC CNTR ECL BIN DUAL | 28480 | 1820-2642 |
| A3A1A5VR1 | 1902-3070 | 5 | 2 | DIODE-ZNR 4.22V 5% DO-35 PD=.4W | 28480 | 1902-3070 |
| A3A1A5VR2 | 1902-3070 | 5 | | DIODE-ZNR 4.22V 5% DO-35 PD=.4W | 28480 | 1902-3070 |
| A3A1A5W1 | 86701-20055 | 1 | 1 | JUMPER-COAX | 28480 | 86701-20055 |
| A3A1A6 | 86701-60022 | 6 | 1 | M/N REFERENCE MOTHER ASSEMBLY | 28480 | 86701-60022 |
| A3A1A6C1 | 0160-2437 | 1 | | CAPACITOR-FDTHRU 5000PF +80 -20% 200V | 28480 | 0160-2437 |
| A3A1A6C2 | 0160-2437 | 1 | | CAPACITOR-FDTHRU 5000PF +80 -20% 200V | 28480 | 0160-2437 |
| A3A1A6C3 | 0160-2437 | 1 | | CAPACITOR-FDTHRU 5000PF +80 -20% 200V | 28480 | 0160-2437 |
| A3A1A6C4 | 0160-2437 | 1 | | CAPACITOR-FDTHRU 5000PF +80 -20% 200V | 28480 | 0160-2437 |
| A3A1A6C5 | 0160-2437 | 1 | | CAPACITOR-FDTHRU 5000PF +80 -20% 200V | 28480 | 0160-2437 |
| A3A1A6C6 | 0160-2437 | 1 | | CAPACITOR-FDTHRU 5000PF +80 -20% 200V | 28480 | 0160-2437 |
| A3A1A6C7 | 0160-2437 | 1 | | CAPACITOR-FDTHRU 5000PF +80 -20% 200V | 28480 | 0160-2437 |
| A3A1A6C8 | 0160-2437 | 1 | | CAPACITOR-FDTHRU 5000PF +80 -20% 200V | 28480 | 0160-2437 |
| A3A1A6C9 | 0160-2437 | 1 | | CAPACITOR-FDTHRU 5000PF +80 -20% 200V | 28480 | 0160-2437 |
| A3A1A6C10 | 0160-2437 | 1 | | CAPACITOR-FDTHRU 5000PF +80 -20% 200V | 28480 | 0160-2437 |
| A3A1A6C11 | 0160-2437 | 1 | | CAPACITOR-FDTHRU 5000PF +80 -20% 200V | 28480 | 0160-2437 |
| A3A1A6C12 | 0160-2437 | 1 | | CAPACITOR-FDTHRU 5000PF +80 -20% 200V | 28480 | 0160-2437 |
| A3A1A6MP1 | 0360-1514 | 7 | 1 | TERMINAL-STUD SGL-PIN PRESS-MTG | 28480 | 0360-1514 |
| A3A1A6MP2 | 2190-0843 | 4 | 1 | WASHER-LK INTL T NO. 8 .165-IN-ID | 28480 | 2190-0843 |
| A3A1A6MP3 | 2580-0002 | 4 | | NUT-HEX-DBL-CHAM 8-32-THD .085-IN-THK | 28480 | 2580-0002 |
| A3A1A6MP4 | 86701-00031 | 1 | 1 | INSULATOR | 28480 | 86701-00031 |
| A3A1A6MP5 | 86701-00046 | 8 | 1 | INSULATOR | 28480 | 86701-00046 |
| A3A1A6XA3A1A | 5060-0112 | 8 | 2 | CONNECTOR-15 CONTACTS | 28480 | 5060-0112 |
| A3A1A6XA3A1B | 5060-0112 | 8 | | CONNECTOR-15 CONTACTS | 28480 | 5060-0112 |
| A3A1A6XA3A1A1 | 1251-4423 | 3 | 1 | CONNECTOR-PC EDGE 15-CONT/ROW 1-ROW | 28480 | 1251-4423 |
| A3A1A6XA3A1A2 | 1251-4174 | 1 | 2 | CONNECTOR-PC EDGE 15-CONT/ROW 1-ROW | 28480 | 1251-4174 |
| A3A1A6XA3A1A3 | 1251-2035 | 9 | 3 | CONNECTOR-PC EDGE 15-CONT/ROW 2-ROWS | 28480 | 1251-2035 |
| A3A1A6XA3A1A5 | 1251-4174 | 1 | | CONNECTOR-PC EDGE 15-CONT/ROW 1-ROW | 28480 | 1251-4174 |
| A3A1A7MP1 | 5021-3208 | 7 | 2 | HOUSING-REF BLK | 28480 | 5021-3208 |
| A3A1A7MP2 | 86701-00024 | 2 | 2 | SCOOP, AIR | 28480 | 86701-00024 |
| A3A1A7MP3 | 86701-00029 | 7 | 2 | BAFFLE, AIR, TOP | 28480 | 86701-00029 |
| A3A1A7MP4 | 86701-00030 | 0 | 2 | BAFFLE, AIR, BOTTOM | 28480 | 86701-00030 |
| A3A1A7MP5 | 2200-0105 | 4 | 58 | SCREW-MACH 4-40 .312-IN-LG PAN-HD-POZI | 00000 | ORDER BY DESCRIPTION |
| A3A1A7MP6 | 85660-20090 | 2 | 4 | STEP WASHER | 28480 | 85660-20090 |
| A3A1A7MP7 | 2200-0103 | 2 | | SCREW-MACH 4-40 .25-IN-LG PAN-HD-POZI | 28480 | 2200-0103 |
| A3A1A7MP8 | 0570-0632 | 3 | 1 | SCREW-SPCL 4-40 .312-IN-LG PAN-HD-POZI | 00000 | ORDER BY DESCRIPTION |
| A3A2 | | | | NOT ASSIGNED | | |
| A3A3 | 86701-60090 | 8 | 1 | POSITIVE REGULATOR ASSEMBLY | 28480 | 86701-60090 |
| A3A3C1 | 0180-2205 | 3 | 1 | CAPACITOR-FXD .33UF+-10% 35VDC TA | 56289 | 150D334X9035A2 |
| A3A3C2 | 0180-0116 | 1 | | CAPACITOR-FXD 6.8UF+-10% 35VDC TA | 56289 | 150D685X9035B2 |
| A3A3C3 | 0180-1746 | 5 | | CAPACITOR-FXD 15UF+-10% 20VDC TA | 56289 | 150D156X9020B2 |
| A3A3C4 | 0160-2199 | 2 | | CAPACITOR-FXD 30PF +-5% 300VDC MICA | 28480 | 0160-2199 |
| A3A3C5 | 0180-0228 | 6 | 11 | CAPACITOR-FXD 22UF+-10% 15VDC TA | 56289 | 150D226X9015B2 |

See introduction to this section for ordering information
*Indicates factory selected value
†Backdating information in Section VII



www.valuetronics.com

## SERVICE SHEET BD8 (cont'd)

**Table 8-42. I/O Assembly Diagnostic Signatures (Without Special Extender Board) (cont'd)**

| PIN NO. | SIGNATURE | MNEMONIC |
|---|---|---|
| U3-11 | 0000 | GND |
| 14 | H6A6 | +5V |
| U4-1 | 289U | |
| 7 | 0000 | GND |
| 8 | H6A6 | |
| 9 | 0000 | VUP |
| 10 | H6A6 | VDN |
| 14 | H6A6 | +5V |
| U5-1 | 75U2 | A0 |
| 2 | 224H | A1 |
| 3 | P198 | |
| 4 | C380 | SA2-L |
| 5 | F9FU | SC2-L |
| 6 | H6A6 | +5V |
| 7 | 0A90 | 817 |
| 8 | 0000 | GND |
| 9 | H6A6 | 816 |
| 13 | 7810 | 812 |
| 14 | PA05 | 811 |
| 15 | HP14 | 810 |
| 16 | H6A6 | +5V |
| U6-1 | 0U42 | |
| 2 | H6A6 | +5V |
| 3 | P223 | E-PIA |
| 4 | H6A6 | TP3 |
| 5 | 0U42 | |
| 6 | H9P4 | |
| 7 | 0000 | GND |
| 9 | H6A6 | NSTRB |
| 10 | H6A6 | STRB DIS |
| 11 | P223 | E-P1A |
| 12 | 0U42 | |
| 13 | H6A6 | +5V |
| 14 | H6A6 | +5V |
| U7-1 | 8485 | PRW |
| 2 | 1C8F | |
| 3 | U0U9 | BD0 |
| 4 | UP98 | BD1 |
| 5 | 8UUC | |
| 6 | 98U5 | |
| 8 | 43AA | BD3 |
| U7-9 | 7058 | END SWP |
| 10 | 0000 | GND |
| 11 | 7810 | 812 |
| 12 | 44A1 | TRIGGER OUTPUT |
| 13 | 8UP7 | BD4 |
| 14 | 0A71 | BD5 |
| 17 | 1A8A | BD6 |
| 19 | 3UCA | |
| 20 | H6A6 | +5V |
| U9-1 | UP39 | |
| 2 | 289U | |
| 7 | 0000 | GND |
| 8 | H6A6 | |
| 9 | 0000 | LEV |
| 12 | H6A6 | UNLOCK |
| 13 | 0000 | |
| 14 | H6A6 | +5V |
| U10-1 | 0000 | FM OM |
| 3 | 0000 | P82 |
| 4 | UNSTABLE | CB2 |
| 5 | H6A6 | PB0 |
| 7 | H6A6 | UNLOCK |
| 8 | 0000 | GND |
| 9 | H6A6 | |
| 11 | H6A6 | PB1 |
| 12 | UNSTABLE | CB2 |
| 13 | 0000 | P83 |
| 15 | 0000 | EXT REF |
| 16 | H6A6 | +5V |
| U11-1 | 0000 | GND |
| 2 | H6A6 | K0 |
| 3 | H6A6 | K1 |
| 4 | H6A6 | K2 |
| 5 | H6A6 | K3 |
| 6 | H6A6 | K4 |
| 7 | H6A6 | K5 |
| 8 | H6A6 | K6 |
| 9 | 0000 | GND |
| 10 | H6A6 | PB0 |
| 11 | H6A6 | PB1 |
| 12 | 0000 | PB2 |
| 13 | 0000 | PB3 |
| 14 | U004 | PB4 |
| 15 | 06UU | PB5 |



www.valuetronics.com

A3

Table 6-3. Replaceable Parts

| Reference Designation | HP Part Number | C D | Qty | Description | Mfr Code | Mfr Part Number |
|---|---|---|---|---|---|---|
| A3A3R21 | 0757-0317 | 7 | | RESISTOR 1.33K 1% .125W F TC=0+-100 | 24546 | C4-1/8-T0-1331-F |
| A3A3R22 | 0698-0084 | 9 | | RESISTOR 2.15K 1% .125W F TC=0+-100 | 24546 | C4-1/8-T0-2151-F |
| A3A3R23 | 0757-0278 | 9 | | RESISTOR 1.78K 1% .125W F TC=0+-100 | 24546 | C4-1/8-T0-1781-F |
| A3A3R24 | 0698-3629 | 4 | 1 | RESISTOR 270 5% 2W MO TC=0+-200 | 28480 | 0698-3629 |
| A3A3R25 | 0698-0084 | 9 | | RESISTOR 2.15K 1% .125W F TC=0+-100 | 24546 | C4-1/8-T0-2151-F |
| A3A3R26 | 0757-0401 | 0 | | RESISTOR 100 1% .125W F TC=0+-100 | 24546 | C4-1/8-T0-101-F |
| A3A3R27 | 0812-0019 | 4 | 3 | RESISTOR .33 5% 3W PW TC=0+-90 | 28480 | 0812-0019 |
| A3A3R28 | 0812-0019 | 4 | | RESISTOR .33 5% 3W PW TC=0+-90 | 28480 | 0812-0019 |
| A3A3R29 | 0812-0019 | 4 | | RESISTOR .33 5% 3W PW TC=0+-90 | 28480 | 0812-0019 |
| A3A3R30 | 0757-0419 | 0 | | RESISTOR 681 1% .125W F TC=0+-100 | 24546 | C4-1/8-T0-681R-F |
| A3A3R31 | 0757-0420 | 3 | | RESISTOR 750 1% .125W F TC=0+-100 | 24546 | C4-1/8-T0-751-F |
| A3A3R32 | 0698-3154 | 0 | | RESISTOR 4.22K 1% .125W F TC=0+-100 | 24546 | C4-1/8-T0-4221-F |
| A3A3R33 | 0757-0280 | 3 | | RESISTOR 1K 1% .125W F TC=0+-100 | 24546 | C4-1/8-T0-1001-F |
| A3A3R34 | 0698-8466 | 7 | 1 | RESISTOR 942 .5% .125W F TC=0+-50 | 28480 | 0698-8466 |
| A3A3R35 | 0698-6835 | 0 | | RESISTOR 3.16K .5% .125W F TC=0+-50 | 24546 | NC55-1/8-T2-3161-D |
| A3A3R36 | 0698-6835 | 0 | | RESISTOR 3.16K .5% .125W F TC=0+-50 | 24546 | NC55-1/8-T2-3161-D |
| A3A3R37 | 0683-0275 | 9 | | RESISTOR 2.7 5% .25W FC TC=-400/+500 | 01121 | CB2765 |
| A3A3R38 | 0698-3444 | 1 | | RESISTOR 316 1% .125W F TC=0+-100 | 24546 | C4-1/8-T0-316R-F |
| A3A3R39 | 0757-0401 | 0 | | RESISTOR 100 1% .125W F TC=0+-100 | 24546 | C4-1/8-T0-101-F |
| A3A3R40 | 0757-0346 | 2 | | RESISTOR 10 1% .125W F TC=0+-100 | 24546 | C4-1/8-T0-10R0-F |
| A3A3R41 | 0698-3150 | 6 | | RESISTOR 2.37K 1% .125W F TC=0+-100 | 24546 | C4-1/8-T0-2371-F |
| A3A3R42 | 0757-0418 | 9 | | RESISTOR 619 1% .125W F TC=0+-100 | 24546 | C4-1/8-T0-619R-F |
| A3A3R43* | 0698-3156 | 2 | 3 | RESISTOR 14.7K 1% .125W F TC=0+-100 | 24546 | C4-1/8-T0-1472-F |
| A3A3R44 | 0757-0459 | 8 | 1 | RESISTOR 56.2K 1% .125W F TC=0+-100 | 24546 | C4-1/8-T0-5622-F |
| A3A3R45 | 0698-3150 | 6 | | RESISTOR 2.37K 1% .125W F TC=0+-100 | 24546 | C4-1/8-T0-2371-F |
| A3A3R46 | 0698-3150 | 6 | | RESISTOR 2.37K 1% .125W F TC=0+-100 | 24546 | C4-1/8-T0-2371-F |
| A3A3R47 | 0757-0288 | 1 | 1 | RESISTOR 9.09K 1% .125W F TC=0+-100 | 19701 | MF4C1/8-T0-9091-F |
| A3A3R48 | 0698-3150 | 6 | | RESISTOR 2.37K 1% .125W F TC=0+-100 | 24546 | C4-1/8-T0-2371-F |
| A3A3R49 | 0698-8464 | 5 | 2 | RESISTOR 12.6K .5% .125W F TC=0+-50 | 28480 | 0698-8464 |
| A3A3R50 | 2100-3095 | 5 | 1 | RESISTOR-TRMR 200 10% C SIDE-ADJ 17-TRN | 02111 | 43P201 |
| A3A3R51 | 0757-0440 | 7 | | RESISTOR 7.5K 1% .125W F TC=0+-100 | 24546 | C4-1/8-T0-7501-F |
| A3A3R52 | 0698-0084 | 9 | | RESISTOR 2.15K 1% .125W F TC=0+-100 | 24546 | C4-1/8-T0-2151-F |
| A3A3R53 | 0698-4405 | 6 | 1 | RESISTOR 107 1% .125W F TC=0+-100 | 24546 | C4-1/8-T0-107R-F |
| A3A3R54 | 0757-0280 | 3 | | RESISTOR 1K 1% .125W F TC=0+-100 | 24546 | C4-1/8-T0-1001-F |
| A3A3R55 | 0757-0401 | 0 | | RESISTOR 100 1% .125W F TC=0+-100 | 24546 | C4-1/8-T0-101-F |
| A3A3R56 | 0698-3150 | 6 | | RESISTOR 2.37K 1% .125W F TC=0+-100 | 24546 | C4-1/8-T0-2371-F |
| A3A3R57 | 0757-0438 | 3 | | RESISTOR 5.11K 1% .125W F TC=0+-100 | 24546 | C4-1/8-T0-5111-F |
| A3A3R58 | 0698-3634 | 1 | 1 | RESISTOR 470 5% 2W MO TC=0+-200 | 28480 | 0698-3634 |
| A3A3R59 | 0698-3162 | 0 | | RESISTOR 46.4K 1% .125W F TC=0+-100 | 24546 | C4-1/8-T0-4642-F |
| A3A3R60 | 0757-0416 | 7 | | RESISTOR 511 1% .125W F TC=0+-100 | 24546 | C4-1/8-T0-511R-F |
| A3A3RT1 | 0837-0126 | 6 | 1 | THERMISTOR DISC 1K-OHM TC=-4.4%/C-DEG | 28480 | 0837-0126 |
| A3A3TP1 | 1251-0600 | 0 | | CONNECTOR-SGL CONT PIN 1.14-MM-BSC-SZ SQ | 28480 | 1251-0600 |
| A3A3TP2 | 1251-0600 | 0 | | CONNECTOR-SGL CONT PIN 1.14-MM-BSC-SZ SQ | 28480 | 1251-0600 |
| A3A3TP3 | 1251-0600 | 0 | | CONNECTOR-SGL CONT PIN 1.14-MM-BSC-SZ SQ | 28480 | 1251-0600 |
| A3A3TP4 | 1251-0600 | 0 | | CONNECTOR-SGL CONT PIN 1.14-MM-BSC-SZ SQ | 28480 | 1251-0600 |
| A3A3TP5 | 1251-0600 | 0 | | CONNECTOR-SGL CONT PIN 1.14-MM-BSC-SZ SQ | 28480 | 1251-0600 |
| A3A3TP6 | 1251-0600 | 0 | | CONNECTOR-SGL CONT PIN 1.14-MM-BSC-SZ SQ | 28480 | 1251-0600 |
| A3A3U1 | 1826-0161 | 7 | 1 | IC OP AMP GP QUAD 14-DIP-P PKG | 04713 | MLM324P |
| A3A3U2 | 1820-0223 | 0 | | IC OP AMP GP TO-99 PKG | 3L585 | CA301AT |
| A3A3U3 | 1820-0223 | 0 | | IC OP AMP GP TO-99 PKG | 3L585 | CA301AT |
| A3A3VR1 | 1902-3171 | 7 | 2 | DIODE-ZNR 11V 5% DO-35 PD=.4W TC=+.062% | 28480 | 1902-3171 |
| A3A3VR2 | 1902-0686 | 3 | 2 | DIODE-ZNR 6.2V 2% DO-7 PD=.4W TC=+.002% | 04713 | 1N825 |
| A3A3VR3 | 1902-3252 | 5 | 1 | DIODE-ZNR 22.6V 2% DO-35 PD=.4W | 28480 | 1902-3252 |
| A3A3VR4 | 1902-0049 | 2 | 2 | DIODE-ZNR 6.19V 5% DO-35 PD=.4W | 28480 | 1902-0049 |
| A3A3VR5 | 1902-0686 | 3 | | DIODE-ZNR 6.2V 2% DO-7 PD=.4W TC=+.002% | 04713 | 1N825 |
| A3A3VR6 | 1902-3082 | 9 | | DIODE-ZNR 4.64V 5% DO-35 PD=.4W | 28480 | 1902-3082 |
| A3A3XF1 | 2110-0269 | 0 | | FUSEHOLDER-CLIP TYPE.25D-FUSE | 28480 | 2110-0269 |
| A3A3XF2 | 2110-0269 | 0 | | FUSEHOLDER-CLIP TYPE.25D-FUSE | 28480 | 2110-0269 |
| A3A4 | 86701-60078 | 2 | 1 | NEGATIVE REGULATOR ASSEMBLY | 28480 | 86701-60078 |
| A3A4C1 | 0160-2199 | 2 | | CAPACITOR-FXD 30PF +-5% 300VDC MICA | 28480 | 0160-2199 |
| A3A4C2 | 0180-0228 | 6 | | CAPACITOR-FXD 22UF+-10% 15VDC TA | 56289 | 150D226X9015B2 |
| A3A4C3 | 0180-1748 | 5 | | CAPACITOR-FXD 15UF+-10% 20VDC TA | 56289 | 150D156X9020B2 |
| A3A4C4 | 0160-2199 | 2 | | CAPACITOR-FXD 30PF +-5% 300VDC MICA | 28480 | 0160-2199 |
| A3A4C5 | 0180-0228 | 6 | | CAPACITOR-FXD 22UF+-10% 15VDC TA | 56289 | 150D226X9015B2 |

See introduction to this section for ordering information
*Indicates factory selected value
†Backdating information in Section VII



www.valuetronics.com

Table 6-3. Replaceable Parts

| Reference Designation | HP Part Number | C D | Qty | Description | Mfr Code | Mfr Part Number |
|---|---|---|---|---|---|---|
| A3A4C6 | 0160-2199 | 2 | | CAPACITOR-FXD 30PF +-5% 300VDC MICA | 28480 | 0160-2199 |
| A3A4C7 | 0180-0228 | 6 | | CAPACITOR-FXD 22UF+-10% 15VDC TA | 56289 | 150D226X9015B2 |
| A3A4C8 | 0180-1731 | 8 | | CAPACITOR-FXD 4.7UF+-10% 50VDC TA | 56289 | 150D475X9050B2 |
| A3A4C9 | 0160-3460 | 2 | | CAPACITOR-FXD .05UF +80-20% 100VDC CER | 28480 | 0160-3460 |
| A3A4C10 | 0180-1746 | 5 | | CAPACITOR-FXD 15UF+-10% 20VDC TA | 56289 | 150D156X9020B2 |
| A3A4C11 | 0160-0127 | 2 | | CAPACITOR-FXD 1UF +-20% 25VDC CER | 28480 | 0160-0127 |
| A3A4C12 | 0160-0575 | 4 | 2 | CAPACITOR-FXD .047UF +-20% 50VDC CER | 28480 | 0160-0575 |
| A3A4C13 | 0160-0127 | 2 | | CAPACITOR-FXD 1UF +-20% 25VDC CER | 28480 | 0160-0127 |
| A3A4C14 | 0160-0127 | 2 | | CAPACITOR-FXD 1UF +-20% 25VDC CER | 28480 | 0160-0127 |
| A3A4C15 | 0160-3460 | 2 | | CAPACITOR-FXD .05UF +80-20% 100VDC CER | 28480 | 0160-3460 |
| A3A4C16 | 0180-0100 | 3 | 1 | CAPACITOR-FXD 4.7UF+-10% 35VDC TA | 56289 | 150D475X9035B2 |
| A3A4CR1 | 1901-0033 | 2 | | DIODE-GEN PRP 180V 200MA DO-7 | 28480 | 1901-0033 |
| A3A4CR2 | 1901-0033 | 2 | | DIODE-GEN PRP 180V 200MA DO-7 | 28480 | 1901-0033 |
| A3A4CR3 | 1901-0033 | 2 | | DIODE-GEN PRP 180V 200MA DO-7 | 28480 | 1901-0033 |
| A3A4CR4 | 1901-0033 | 2 | | DIODE-GEN PRP 180V 200MA DO-7 | 28480 | 1901-0033 |
| A3A4CR5 | 1901-0033 | 2 | | DIODE-GEN PRP 180V 200MA DO-7 | 28480 | 1901-0033 |
| A3A4CR6 | 1901-0033 | 2 | | DIODE-GEN PRP 180V 200MA DO-7 | 28480 | 1901-0033 |
| A3A4CR7 | 1901-0033 | 2 | | DIODE-GEN PRP 180V 200MA DO-7 | 28480 | 1901-0033 |
| A3A4CR8 | 1901-0662 | 3 | | DIODE-PWR RECT 100V 6A | 04713 | MR751 |
| A3A4CR9 | 1901-0662 | 3 | | DIODE-PWR RECT 100V 6A | 04713 | MR751 |
| A3A4CR10 | 1990-0404 | 8 | | LED-LAMP LUM-INT=300UCD IF=50MA-MAX | 28480 | 5082-4480 |
| A3A4CR11 | 1990-0404 | 8 | | LED-LAMP LUM-INT=300UCD IF=50MA-MAX | 28480 | 5082-4480 |
| A3A4CR12 | 1901-0662 | 3 | | DIODE-PWR RECT 100V 6A | 04713 | MR751 |
| A3A4CR13 | 1990-0404 | 8 | | LED-LAMP LUM-INT=300UCD IF=50MA-MAX | 28480 | 5082-4480 |
| A3A4CR14 | 1901-0033 | 2 | | DIODE-GEN PRP 180V 200MA DO-7 | 28480 | 1901-0033 |
| A3A4CR15 | 1901-0743 | 1 | 1 | DIODE-PWR RECT 1N4004 400V 1A DO-41 | 01295 | 1N4004 |
| A3A4CR16-A3A4CR24 | | | 10 | NOT ASSIGNED | | |
| A3A4CR25 | 1884-0018 | 5 | | THYRISTOR-SCR 2N4186 VRRM=200 | 04713 | 2N4186 |
| A3A4CR26 | 1884-0018 | 5 | | THYRISTOR-SCR 2N4186 VRRM=200 | 04713 | 2N4186 |
| A3A4CR27 | 1884-0018 | 5 | | THYRISTOR-SCR 2N4186 VRRM=200 | 04713 | 2N4186 |
| A3A4F1 | 2110-0083 | 6 | 1 | FUSE 2.5A 250V NTD 1.25X.25 UL | 28480 | 2110-0083 |
| A3A4F2 | 2110-0043 | 8 | 1 | FUSE 1.5A 250V NTD 1.25X.25 UL | 28480 | 2110-0043 |
| A3A4F3 | 2110-0010 | 9 | 1 | FUSE 5A 250V NTD 1.25X.25 UL | 75915 | 312005 |
| A3A4K1 | 0490-0916 | 6 | 1 | RELAY-REED 1A 500MA 100VDC 5VDC-COIL | 28480 | 0490-0916 |
| A3A4MP1 | 5000-9043 | 6 | | PIN-P.C. BOARD EXTRACTOR | 28480 | 5000-9043 |
| A3A4MP2 | 5040-6843 | 2 | | BOARD EXTRACTOR | 28480 | 5040-6843 |
| A3A4MP3 | 1200-0081 | 4 | | INSULATOR-FLG-BSHG NYLON | 28480 | 1200-0081 |
| A3A4Q1 | 1854-0404 | 0 | | TRANSISTOR NPN SI TO-18 PD=360MW | 28480 | 1854-0404 |
| A3A4Q2 | 1854-0441 | 5 | | TRANSISTOR NPN SI PD=5.8W FT=800KHZ | 28480 | 1854-0441 |
| A3A4Q3 | 1853-0001 | 1 | 1 | TRANSISTOR PNP SI TO-39 PD=600MW | 28480 | 1853-0001 |
| A3A4Q4 | 1853-0007 | 7 | 6 | TRANSISTOR PNP 2N3251 SI TO-18 PD=360MW | 04713 | 2N3251 |
| A3A4Q5 | 1854-0271 | 9 | 1 | TRANSISTOR NPN SI TO-39 PD=1W FT=150MHZ | 28480 | 1854-0271 |
| A3A4Q6 | 1854-0404 | 0 | | TRANSISTOR NPN SI TO-18 PD=360MW | 28480 | 1854-0404 |
| A3A4Q7 | 1854-0404 | 0 | | TRANSISTOR NPN SI TO-18 PD=360MW | 28480 | 1854-0404 |
| A3A4R1 | 0812-0020 | 7 | 2 | RESISTOR .39 5% 3W PW TC=0+-90 | 91637 | CW2B1-3-T2-39/100-J |
| A3A4R2 | 0757-0421 | 4 | | RESISTOR 825 1% .125W F TC=0+-100 | 24546 | C4-1/8-T0-825R-F |
| A3A4R3 | 0757-0438 | 3 | | RESISTOR 5.11K 1% .125W F TC=0+-100 | 24546 | C4-1/8-T0-5111-F |
| A3A4R4 | 0757-0280 | 3 | | RESISTOR 1K 1% .125W F TC=0+-100 | 24546 | C4-1/8-T0-1001-F |
| A3A4R5 | 0698-6835 | 0 | | RESISTOR 3.16K .5% .125W F TC=0+-50 | 24546 | NC55-1/8-T2-3161-D |
| A3A4R6 | 0698-6835 | 0 | | RESISTOR 3.16K .5% .125W F TC=0+-50 | 24546 | NC55-1/8-T2-3161-D |
| A3A4R7 | 0698-6835 | 0 | | RESISTOR 3.16K .5% .125W F TC=0+-50 | 24546 | NC55-1/8-T2-3161-D |
| A3A4R8 | 0683-0275 | 9 | | RESISTOR 2.7 5% .25W FC TC=-400/+500 | 01121 | CB2765 |
| A3A4R9 | 0698-3444 | 1 | | RESISTOR 316 1% .125W F TC=0+-100 | 24546 | C4-1/8-T0-316R-F |
| A3A4R10 | 0757-0346 | 2 | | RESISTOR 10 1% .125W F TC=0+-100 | 24546 | C4-1/8-T0-10R0-F |
| A3A4R11 | 0757-0280 | 3 | | RESISTOR 1K 1% .125W F TC=0+-100 | 24546 | C4-1/8-T0-1001-F |
| A3A4R12 | 0757-0428 | 1 | | RESISTOR 1.62K 1% .125W F TC=0+-100 | 24546 | C4-1/8-T0-1621-F |
| A3A4R13 | 0698-3447 | 4 | | RESISTOR 422 1% .125W F TC=0+-100 | 24546 | C4-1/8-T0-422R-F |
| A3A4R14 | 0698-3444 | 1 | | RESISTOR 316 1% .125W F TC=0+-100 | 24546 | C4-1/8-T0-316R-F |
| A3A4R15 | 0757-0346 | 2 | | RESISTOR 10 1% .125W F TC=0+-100 | 24546 | C4-1/8-T0-10R0-F |
| A3A4R16 | 0698-3444 | 1 | | RESISTOR 316 1% .125W F TC=0+-100 | 24546 | C4-1/8-T0-316R-F |
| A3A4R17 | 0811-1665 | 6 | 1 | RESISTOR .82 5% 2W PW TC=0+-600 | 75042 | BWH2-82/100-J |
| A3A4R18 | 0757-0260 | 3 | | RESISTOR 1K 1% .125W F TC=0+-100 | 24546 | C4-1/8-T0-1001-F |
| A3A4R19 | 0698-3449 | 6 | | RESISTOR 28.7K 1% .125W F TC=0+-100 | 24546 | C4-1/8-T0-2872-F |
| A3A4R20 | 0757-0280 | 3 | | RESISTOR 1K 1% .125W F TC=0+-100 | 24546 | C4-1/8-T0-1001-F |

See introduction to this section for ordering information
*Indicates factory selected value
†Backdating information in Section VII



www.valuetronics.com

A3

Table 6-3. Replaceable Parts

| Reference Designation | HP Part Number | C D | Qty | Description | Mfr Code | Mfr Part Number |
|---|---|---|---|---|---|---|
| A3A4R21 | 0757-0442 | 9 | | RESISTOR 10K 1% .125W F TC=0+-100 | 24546 | C4-1/8-T0-1002-F |
| A3A4R22 | 0757-0442 | 9 | | RESISTOR 10K 1% .125W F TC=0+-100 | 24546 | C4-1/8-T0-1002-F |
| A3A4R23 | 0812-0020 | 7 | | RESISTOR .39 5% 3W PW TC=0+-90 | 91637 | CW2B1-3-T2-39/100-J |
| A3A4R24 | 0698-8464 | 5 | | RESISTOR 12.6K .5% .125W F TC=0+-50 | 28480 | 0698-8464 |
| A3A4R25 | 0698-6835 | 0 | | RESISTOR 3.16K .5% .125W F TC=0+-50 | 24546 | NC55-1/8-T2-3161-D |
| A3A4R26 | 0698-6835 | 0 | | RESISTOR 3.16K .5% .125W F TC=0+-50 | 24546 | NC55-1/8-T2-3161-D |
| A3A4R27 | 0683-0275 | 9 | | RESISTOR 2.7 5% .25W FC TC=-400/+500 | 01121 | CB2765 |
| A3A4R28 | 0698-3444 | 1 | | RESISTOR 316 1% .125W F TC=0+-100 | 24546 | C4-1/8-T0-316R-F |
| A3A4R29 | 0757-0346 | 2 | | RESISTOR 10 1% .125W F TC=0+-100 | 24546 | C4-1/8-T0-10R0-F |
| A3A4R30 | 0698-3150 | 6 | | RESISTOR 2.37K 1% .125W F TC=0+-100 | 24546 | C4-1/8-T0-2371-F |
| A3A4R31 | 0698-3150 | 6 | | RESISTOR 2.37K 1% .125W F TC=0+-100 | 24546 | C4-1/8-T0-2371-F |
| A3A4R32 | 0812-0066 | 1 | 3 | RESISTOR .33 5% 2W PW TC=0+-800 | 75042 | BWH2-33/100-J |
| A3A4R33 | 0812-0066 | 1 | | RESISTOR .33 5% 2W PW TC=0+-800 | 75042 | BWH2-33/100-J |
| A3A4R34 | 0812-0066 | 1 | | RESISTOR .33 5% 2W PW TC=0+-800 | 75042 | BWH2-33/100-J |
| A3A4R35 | 0757-0280 | 3 | | RESISTOR 1K 1% .125W F TC=0+-100 | 24546 | C4-1/8-T0-1001-F |
| A3A4R36 | 0757-0441 | 8 | | RESISTOR 8.25K 1% .125W F TC=0+-100 | 24546 | C4-1/8-T0-8251-F |
| A3A4R37 | 0698-6835 | 0 | | RESISTOR 3.16K .5% .125W F TC=0+-50 | 24546 | NC55-1/8-T2-3161-D |
| A3A4R38 | 0698-7050 | 3 | 1 | RESISTOR 4.48K .5% .125W F TC=0+-50 | 28480 | 0698-7050 |
| A3A4R39 | 0698-6853 | 2 | 1 | RESISTOR 7.68K .5% .125W F TC=0+-50 | 24546 | NC55-1/8-T2-7681-D |
| A3A4R40 | 0683-0275 | 9 | | RESISTOR 2.7 5% .25W FC TC=-400/+500 | 01121 | CB2765 |
| A3A4R41 | 0757-0441 | 8 | | RESISTOR 8.25K 1% .125W F TC=0+-100 | 24546 | C4-1/8-T0-8251-F |
| A3A4R42 | 0698-3160 | 8 | 1 | RESISTOR 31.6K 1% .125W F TC=0+-100 | 24546 | C4-1/8-T0-3162-F |
| A3A4R43 | 0757-0401 | 0 | | RESISTOR 100 1% .125W F TC=0+-100 | 24546 | C4-1/8-T0-101-F |
| A3A4R44 | 0757-0401 | 0 | | RESISTOR 100 1% .125W F TC=0+-100 | 24546 | C4-1/8-T0-101-F |
| A3A4R45 | 0757-0401 | 0 | | RESISTOR 100 1% .125W F TC=0+-100 | 24546 | C4-1/8-T0-101-F |
| A3A4R46 | 0757-0280 | 3 | | RESISTOR 1K 1% .125W F TC=0+-100 | 24546 | C4-1/8-T0-1001-F |
| A3A4R47 | 0757-0442 | 9 | | RESISTOR 10K 1% .125W F TC=0+-100 | 24546 | C4-1/8-T0-1002-F |
| A3A4R48 | 0757-0401 | 0 | | RESISTOR 100 1% .125W F TC=0+-100 | 24546 | C4-1/8-T0-101-F |
| A3A4TP1 | 1251-0600 | 0 | | CONNECTOR-SGL CONT PIN 1.14-MM-BSC-SZ SQ | 28480 | 1251-0600 |
| A3A4TP2 | 1251-0600 | 0 | | CONNECTOR-SGL CONT PIN 1.14-MM-BSC-SZ SQ | 28480 | 1251-0600 |
| A3A4TP3 | 1251-0600 | 0 | | CONNECTOR-SGL CONT PIN 1.14-MM-BSC-SZ SQ | 28480 | 1251-0600 |
| A3A4TP4 | 1251-0600 | 0 | | CONNECTOR-SGL CONT PIN 1.14-MM-BSC-SZ SQ | 28480 | 1251-0600 |
| A3A4TP5 | 1251-0600 | 0 | | CONNECTOR-SGL CONT PIN 1.14-MM-BSC-SZ SQ | 28480 | 1251-0600 |
| A3A4U1 | 1820-0223 | 0 | | IC OP AMP GP TO-99 PKG | 3L585 | CA301AT |
| A3A4U2 | 1820-0223 | 0 | | IC OP AMP GP TO-99 PKG | 3L585 | CA301AT |
| A3A4U3 | 1820-0223 | 0 | | IC OP AMP GP TO-99 PKG | 3L585 | CA301AT |
| A3A4VR1 | 1902-0025 | 4 | 2 | DIODE-ZNR 10V 5% DO-35 PD=.4W TC=+.06% | 28480 | 1902-0025 |
| A3A4VR2 | 1902-3171 | 7 | | DIODE-ZNR 11V 5% DO-35 PD=.4W TC=+.062% | 28480 | 1902-3171 |
| A3A4VR3 | 1902-3330 | 0 | 1 | DIODE-ZNR 44.2V 2% DO-35 PD=.4W | 28480 | 1902-3330 |
| A3A4VR4 | 1902-0049 | 2 | | DIODE-ZNR 6.19V 5% DO-35 PD=.4W | 28480 | 1902-0049 |
| A3A4XF1 | 2110-0269 | 0 | | FUSEHOLDER-CLIP TYPE.25D-FUSE | 28480 | 2110-0269 |
| A3A4XF2 | 2110-0269 | 0 | | FUSEHOLDER-CLIP TYPE.25D-FUSE | 28480 | 2110-0269 |
| A3A4XF3 | 2110-0269 | 0 | | FUSEHOLDER-CLIP TYPE.25D-FUSE | 28480 | 2110-0269 |
| A3A5 | 86701-60015 | 7 | 1 | DAC ASSY (DIGITAL-TO-ANALOG CONVERTER) | 28480 | 86701-60015 |
| A3A5C1 | 0160-2055 | 9 | | CAPACITOR-FXD .01UF +80-20% 100VDC CER | 28480 | 0160-2055 |
| A3A5C2 | 0180-0229 | 6 | | CAPACITOR-FXD 22UF+-10% 15VDC TA | 56289 | 150D226X9015B2 |
| A3A5C3 | 0160-2055 | 9 | | CAPACITOR-FXD .01UF +80-20% 100VDC CER | 28480 | 0160-2055 |
| A3A5C4 | 0180-0229 | 7 | | CAPACITOR-FXD 33UF+-10% 10VDC TA | 56289 | 150D336X9010B2 |
| A3A5C5 | 0160-2055 | 9 | | CAPACITOR-FXD .01UF +80-20% 100VDC CER | 28480 | 0160-2055 |
| A3A5C6 | 0180-0116 | 1 | | CAPACITOR-FXD 6.8UF+-10% 35VDC TA | 56289 | 150D685X9035B2 |
| A3A5C7 | 0180-1731 | 8 | | CAPACITOR-FXD 4.7UF+-10% 50VDC TA | 56289 | 150D475X9050B2 |
| A3A5C8 | 0160-2055 | 9 | | CAPACITOR-FXD .01UF +80-20% 100VDC CER | 28480 | 0160-2055 |
| A3A5C9 | 0180-1731 | 8 | | CAPACITOR-FXD 4.7UF+-10% 50VDC TA | 56289 | 150D475X9050B2 |
| A3A5C10 | 0160-2055 | 9 | | CAPACITOR-FXD .01UF +80-20% 100VDC CER | 28480 | 0160-2055 |
| A3A5C11 | 0180-2141 | 6 | 1 | CAPACITOR-FXD 3.3UF+-10% 50VDC TA | 56289 | 150D335X9050B2 |
| A3A5C12 | 0160-0160 | 3 | 1 | CAPACITOR-FXD 8200PF +-10% 200VDC POLYE | 28480 | 0160-0160 |
| A3A5L1 | 9100-1641 | 0 | | INDUCTOR RF-CH-MLD 240UH 5% .166DX.385LG | 28480 | 9100-1641 |
| A3A5L2 | 9100-1641 | 0 | | INDUCTOR RF-CH-MLD 240UH 5% .166DX.385LG | 28480 | 9100-1641 |
| A3A5L3 | 9100-1641 | 0 | | INDUCTOR RF-CH-MLD 240UH 5% .166DX.385LG | 28480 | 9100-1641 |
| A3A5MP1 | 5000-9043 | 6 | | PIN-P.C. BOARD EXTRACTOR | 28480 | 5000-9043 |
| A3A5MP2 | 5040-6843 | 2 | | EXTRACTOR- P.C. BOARD | 28480 | 5040-6843 |

See introduction to this section for ordering information
*Indicates factory selected value
†Backdating information in Section VII



www.valuetronics.com

A3

## Table 6-3. Replaceable Parts

| Reference Designation | HP Part Number | C D | Qty | Description | Mfr Code | Mfr Part Number |
|---|---|---|---|---|---|---|
| A3A5Q1 | 1853-0007 | 7 | | TRANSISTOR PNP 2N3251 SI TO-18 PD=360MW | 04713 | 2N3251 |
| A3A5Q2 | 1853-0451 | 5 | | TRANSISTOR PNP 2N3799 SI TO-18 PD=360MW | 01295 | 2N3799 |
| A3A5Q3 | 1853-0451 | 5 | | TRANSISTOR PNP 2N3799 SI TO-18 PD=360MW | 01295 | 2N3799 |
| A3A5Q4 | 1854-0404 | 0 | | TRANSISTOR NPN SI TO-18 PD=360MW | 28480 | 1854-0404 |
| A3A5Q5 | 1854-0712 | 3 | 3 | TRANSISTOR-DUAL NPN PD=1.8W | 28480 | 1854-0712 |
| A3A5Q6 | 1853-0451 | 5 | | TRANSISTOR PNP 2N3799 SI TO-18 PD=360MW | 01295 | 2N3799 |
| A3A5Q7 | 1854-0474 | 4 | 1 | TRANSISTOR NPN SI PD=310MW FT=100MHZ | 04713 | 2N5551 |
| A3A5Q8 | 1853-0007 | 7 | | TRANSISTOR PNP 2N3251 SI TO-18 PD=360MW | 04713 | 2N3251 |
| A3A5Q9 | 1853-0451 | 5 | | TRANSISTOR PNP 2N3799 SI TO-18 PD=360MW | 01295 | 2N3799 |
| A3A5Q10 | 1853-0451 | 5 | | TRANSISTOR PNP 2N3799 SI TO-18 PD=360MW | 01295 | 2N3799 |
| A3A5Q11 | 1853-0007 | 7 | | TRANSISTOR PNP 2N3251 SI TO-18 PD=360MW | 04713 | 2N3251 |
| A3A5Q12 | 1853-0451 | 5 | | TRANSISTOR PNP 2N3799 SI TO-18 PD=360MW | 01295 | 2N3799 |
| A3A5R1 | 0811-3404 | 5 | 1 | RESISTOR 3.55K .1% .05W PWW TC=0+-5 | 28480 | 0811-3404 |
| A3A5R2 | 0811-3358 | 8 | 1 | RESISTOR 7.2K .1% .05W PWW TC=0+-5 | 28480 | 0811-3358 |
| A3A5R3 | 2100-1654 | 8 | 2 | RESISTOR-TRMR 100 5% WW SIDE-ADJ 22-TRN | 32997 | 3057P-1-101 |
| A3A5R4 | 2100-1448 | 8 | 1 | RESISTOR-TRMR 200 5% WW SIDE-ADJ 22-TRN | 32997 | 3057Y-1-201 |
| A3A5R5 | 0698-3447 | 4 | | RESISTOR 422 1% .125W F TC=0+-100 | 24546 | C4-1/8-T0-422R-F |
| A3A5R6 | 0698-0083 | 8 | | RESISTOR 1.96K 1% .125W F TC=0+-100 | 24546 | C4-1/8-T0-1961-F |
| A3A5R7 | 0698-3156 | 2 | | RESISTOR 14.7K 1% .125W F TC=0+-100 | 24546 | C4-1/8-T0-1472-F |
| A3A5R8 | 0757-0290 | 5 | 3 | RESISTOR 6.19K 1% .125W F TC=0+-100 | 19701 | MF4C1/8-T0-6191-F |
| A3A5R9 | 0757-0401 | 0 | | RESISTOR 100 1% .125W F TC=0+-100 | 24546 | C4-1/8-T0-101-F |
| A3A5R10 | 0757-0438 | 3 | | RESISTOR 5.11K 1% .125W F TC=0+-100 | 24546 | C4-1/8-T0-5111-F |
| A3A5R11 | 0811-3357 | 7 | 2 | RESISTOR 6.25K .1% .05W PWW TC=0+-5 | 28480 | 0811-3357 |
| A3A5R12 | 0757-0438 | 3 | | RESISTOR 5.11K 1% .125W F TC=0+-100 | 24546 | C4-1/8-T0-5111-F |
| A3A5R13 | 2100-1657 | 1 | 1 | RESISTOR-TRMR 1K 5% WW SIDE-ADJ 22-TRN | 32997 | 3057P-1-102 |
| A3A5R14 | 0811-3359 | 9 | 5 | RESISTOR 12.5K .1% .05W PWW TC=0+-5 | 28480 | 0811-3359 |
| A3A5R15 | 0811-3357 | 7 | | RESISTOR 6.25K .1% .05W PWW TC=0+-5 | 28480 | 0811-3357 |
| A3A5R16 | 0699-0271 | 8 | 1 | RESISTOR 715 .1% .125W F TC=0+-25 | 28480 | 0699-0271 |
| A3A5R17 | 0811-3359 | 9 | | RESISTOR 12.5K .1% .05W PWW TC=0+-5 | 28480 | 0811-3359 |
| A3A5R18 | 2100-1654 | 8 | | RESISTOR-TRMR 100 5% WW SIDE-ADJ 22-TRN | 32997 | 3057P-1-101 |
| A3A5R19 | 0811-3359 | 9 | | RESISTOR 12.5K .1% .05W PWW TC=0+-5 | 28480 | 0811-3359 |
| A3A5R20 | 2100-1656 | 0 | 4 | RESISTOR-TRMR 500 5% WW SIDE-ADJ 22-TRN | 32997 | 3057P-1-501 |
| A3A5R21 | 0811-3360 | 2 | 1 | RESISTOR 25K .1% .05W PWW TC=0+-5 | 28480 | 0811-3360 |
| A3A5R22 | 2100-1656 | 0 | | RESISTOR-TRMR 500 5% WW SIDE-ADJ 22-TRN | 32997 | 3057P-1-501 |
| A3A5R23 | 0811-3361 | 3 | 1 | RESISTOR 50K .1% .05W PWW TC=0+-5 | 28480 | 0811-3361 |
| A3A5R24 | 2100-1658 | 2 | 1 | RESISTOR-TRMR 2K 5% WW SIDE-ADJ 22-TRN | 32997 | 3057P-1-202 |
| A3A5R25 | 0811-2919 | 5 | 1 | RESISTOR 100K .1% .125W PWW TC=0+-5 | 54294 | SP70-1/16-C-1003-B |
| A3A5R26 | 0811-2037 | 8 | 1 | RESISTOR 2.4K 1% .25W PWW TC=0+-10 | 20940 | 143-D-2401-F |
| A3A5R27 | 0811-3235 | 0 | 1 | RESISTOR 7.5K 1% .05W PWW TC=0+-10 | 20940 | 140-1/20-7501-F |
| A3A5R28 | 0698-6358 | 2 | 1 | RESISTOR 100K .1% .125W F TC=0+-25 | 28480 | 0698-6358 |
| A3A5R29 | 2100-1656 | 0 | | RESISTOR-TRMR 500 5% WW SIDE-ADJ 22-TRN | 32997 | 3057P-1-501 |
| A3A5R30 | 0811-1185 | 5 | 1 | RESISTOR 10K .01% .05W PWW TC=0+-10 | 20940 | 140-1/20-1002-T |
| A3A5R31 | 0811-3359 | 9 | | RESISTOR 12.5K .1% .05W PWW TC=0+-5 | 28480 | 0811-3359 |
| A3A5R32 | 0811-3138 | 2 | 1 | RESISTOR 25K .1% .125W PWW TC=0+-10 | 20940 | 114-1/16-2502-B |
| A3A5R33 | 0811-0647 | 2 | 1 | RESISTOR 50K .1% .125W PWW TC=0+-10 | 28480 | 0811-0647 |
| A3A5R34 | 0698-8319 | 9 | 1 | RESISTOR 10K 1% .1W F TC=0+-10 | 19701 | 5023Z1/8-T13-1002-F |
| A3A5R35 | 0811-3362 | 4 | 1 | RESISTOR 825 .1% .05W PWW TC=0+-10 | 28480 | 0811-3362 |
| A3A5R36 | 0698-3193 | 7 | 1 | RESISTOR 10K .25% .125W F TC=0+-50 | 28480 | 0698-3193 |
| A3A5R37 | 0811-3359 | 9 | | RESISTOR 12.5K .1% .05W PWW TC=0+-5 | 28480 | 0811-3359 |
| A3A5R38 | 0698-3235 | 8 | 1 | RESISTOR 25K .25% .125W F TC=0+-50 | 03888 | PME55-1/8-T2-2502-C |
| A3A5R39 | 0698-3220 | 1 | 1 | RESISTOR 50K .25% .125W F TC=0+-50 | 28480 | 0698-3220 |
| A3A5R40 | 0698-3190 | 4 | 1 | RESISTOR 100K .25% .125W F TC=0+-50 | 28480 | 0698-3190 |
| A3A5R41 | 0698-3237 | 0 | 1 | RESISTOR 5K .25% .125W F TC=0+-50 | 28480 | 0698-3237 |
| A3A5R42 | 2100-1656 | 0 | | RESISTOR-TRMR 500 5% WW SIDE-ADJ 22-TRN | 32997 | 3057P-1-501 |
| A3A5R43 | 0811-2895 | 6 | 1 | RESISTOR 422 .1% .2W PWW TC=0+-10 | 14140 | 1350-1/16-L3-422R-B |
| A3A5R44 | 0698-3153 | 9 | 3 | RESISTOR 3.83K 1% .125W F TC=0+-100 | 24546 | C4-1/8-T0-3831-F |
| A3A5R45 | 0698-0083 | 8 | | RESISTOR 1.96K 1% .125W F TC=0+-100 | 24546 | C4-1/8-T0-1961-F |
| A3A5R46 | 0757-0458 | 7 | 9 | RESISTOR 51.1K 1% .125W F TC=0+-100 | 24546 | C4-1/8-T0-5112-F |
| A3A5R47 | 0757-0438 | 3 | | RESISTOR 5.11K 1% .125W F TC=0+-100 | 24546 | C4-1/8-T0-5111-F |
| A3A5R48 | 0757-0438 | 3 | | RESISTOR 5.11K 1% .125W F TC=0+-100 | 24546 | C4-1/8-T0-5111-F |
| A3A5R49 | 0757-0438 | 3 | | RESISTOR 5.11K 1% .125W F TC=0+-100 | 24546 | C4-1/8-T0-5111-F |
| A3A5R50 | 0757-0458 | 7 | | RESISTOR 51.1K 1% .125W F TC=0+-100 | 24546 | C4-1/8-T0-5112-F |
| A3A5R51 | 0811-3356 | 6 | 1 | RESISTOR 5.9K .1% .125W PWW TC=0+-5 | 28480 | 0811-3356 |
| A3A5R52 | 0698-6360 | 6 | 1 | RESISTOR 10K .1% .125W F TC=0+-25 | 28480 | 0698-6360 |
| A3A5R53 | 0757-0428 | 1 | | RESISTOR 1.62K 1% .125W F TC=0+-100 | 24546 | C4-1/8-T0-1621-F |
| A3A5R54 | 0757-0346 | 2 | | RESISTOR 10 1% .125W F TC=0+-100 | 24546 | C4-1/8-T0-10R0-F |
| A3A5R55 | 0811-3325 | 9 | 1 | RESISTOR 312 .1% .125W PWW TC=0+-10 | 28480 | 0811-3325 |

See introduction to this section for ordering information
*Indicates factory selected value
†Backdating information in Section VII



www.valuetronics.com

A3

Table 6-3. Replaceable Parts

| Reference Designation | HP Part Number | C D | Qty | Description | Mfr Code | Mfr Part Number |
|---|---|---|---|---|---|---|
| A3A5R56 | 0757-0394 | 0 | | RESISTOR 51.1 1% .125W F TC=0+-100 | 24546 | C4-1/8-T0-51R1-F |
| A3A5R57 | 0757-0421 | 4 | | RESISTOR 825 1% .125W F TC=0+-100 | 24546 | C4-1/8-T0-825R-F |
| A3A5R58 | 0757-0290 | 5 | | RESISTOR 6.19K 1% .125W F TC=0+-100 | 19701 | MF4C1/8-T0-6191-F |
| A3A5R59 | 0698-3456 | 5 | 1 | RESISTOR 267K 1% .125W F TC=0+-100 | 24546 | C4-1/8-T0-2673-F |
| A3A5R60 | 0698-3454 | 3 | 1 | RESISTOR 215K 1% .125W F TC=0+-100 | 24546 | C4-1/8-T0-2153-F |
| A3A5R61 | 0757-1094 | 9 | | RESISTOR 1.47K 1% .125W F TC=0+-100 | 24546 | C4-1/8-T0-1471-F |
| A3A5TP1 | 1251-0600 | 0 | | CONNECTOR-SGL CONT PIN 1.14-MM-BSC-SZ SQ | 28480 | 1251-0600 |
| A3A5TP2 | 1251-0600 | 0 | | CONNECTOR-SGL CONT PIN 1.14-MM-BSC-SZ SQ | 28480 | 1251-0600 |
| A3A5TP3 | 1251-0600 | 0 | | CONNECTOR-SGL CONT PIN 1.14-MM-BSC-SZ SQ | 28480 | 1251-0600 |
| A3A5TP4 | 1251-0600 | 0 | | CONNECTOR-SGL CONT PIN 1.14-MM-BSC-SZ SQ | 28480 | 1251-0600 |
| A3A5TP5 | 1251-0600 | 0 | | CONNECTOR-SGL CONT PIN 1.14-MM-BSC-SZ SQ | 28480 | 1251-0600 |
| A3A5U1 | 1826-0092 | 3 | | IC OP AMP GP DUAL TO-99 PKG | 28480 | 1826-0092 |
| A3A5U2 | 1826-0261 | 8 | 4 | IC OP AMP LOW-NOISE TO-99 PKG | 28480 | 1826-0261 |
| A3A5U3 | 1826-0261 | 8 | | IC OP AMP LOW-NOISE TO-99 PKG | 28480 | 1826-0261 |
| A3A5U4 | 1826-0261 | 8 | | IC OP AMP LOW-NOISE TO-99 PKG | 28480 | 1826-0261 |
| A3A5U5 | 1901-1011 | 8 | 3 | DIODE-ARRAY VF DIFF=5MV | 28480 | 1901-1011 |
| A3A5U6 | 1901-1011 | 8 | | DIODE-ARRAY VF DIFF=5MV | 28480 | 1901-1011 |
| A3A5U7 | 1901-1011 | 8 | | DIODE-ARRAY VF DIFF=5MV | 28480 | 1901-1011 |
| A3A5U8 | 1820-0668 | 7 | 3 | IC BFR TTL NON-INV HEX 1-INP | 01295 | SN7407N |
| A3A5U9 | 1820-0668 | 7 | | IC BFR TTL NON-INV HEX 1-INP | 01295 | SN7407N |
| A3A5U10 | 1820-0668 | 7 | | IC BFR TTL NON-INV HEX 1-INP | 01295 | SN7407N |
| A3A5VR1 | 1902-0692 | 1 | 1 | DIODE-ZNR 6.3V 1% DO-7 PD=.4W TC=+.001% | 28480 | 1902-0692 |
| A3A5VR2 | 1902-0244 | 9 | 1 | DIODE-ZNR 30V 5% PD=1W IR=5UA | 28480 | 1902-0244 |
| A3A6 | 86701-60018 | 3 | 1 | YTO DRIVER ASSEMBLY | 28480 | 86701-60018 |
| A3A6C1 | 0160-3451 | 1 | | CAPACITOR-FXD .01UF +80-20% 100VDC CER | 28480 | 0160-3451 |
| A3A6C2 | 0180-1731 | 8 | | CAPACITOR-FXD 4.7UF+-10% 50VDC TA | 56289 | 150D475X9050B2 |
| A3A6C3 | 0180-0116 | 1 | | CAPACITOR-FXD 6.8UF+-10% 35VDC TA | 56289 | 150D685X9035B2 |
| A3A6C4 | 0160-0574 | 3 | 6 | CAPACITOR-FXD .022UF +-20% 100VDC CER | 28480 | 0160-0574 |
| A3A6C5 | 0180-0116 | 1 | | CAPACITOR-FXD 6.8UF+-10% 35VDC TA | 56289 | 150D685X9035B2 |
| A3A6C6 | 0160-3451 | 1 | | CAPACITOR-FXD .01UF +80-20% 100VDC CER | 28480 | 0160-3451 |
| A3A6C7 | 0180-2139 | 2 | 1 | CAPACITOR-FXD 10UF+-20% 50VDC TA | 06001 | 69F177G7 |
| A3A6C8 | 0160-3451 | 1 | | CAPACITOR-FXD .01UF +80-20% 100VDC CER | 28480 | 0160-3451 |
| A3A6C9 | 0160-3452 | 2 | 1 | CAPACITOR-FXD .02UF +-20% 100VDC CER | 28480 | 0160-3452 |
| A3A6C10 | 0180-0229 | 7 | | CAPACITOR-FXD 33UF+-10% 10VDC TA | 56289 | 150D336X9010B2 |
| A3A6C11 | 0160-3451 | 1 | | CAPACITOR-FXD .01UF +80-20% 100VDC CER | 28480 | 0160-3451 |
| A3A6C12 | 0160-3451 | 1 | | CAPACITOR-FXD .01UF +80-20% 100VDC CER | 28480 | 0160-3451 |
| A3A6C13 | 0180-0197 | 8 | | CAPACITOR-FXD 2.2UF+-10% 20VDC TA | 56289 | 150D225X9020A2 |
| A3A6C14 | 0180-0228 | 6 | | CAPACITOR-FXD 22UF+-10% 15VDC TA | 56289 | 150D226X9015B2 |
| A3A6C15 | 0180-1746 | 5 | | CAPACITOR-FXD 15UF+-10% 20VDC TA | 56289 | 150D156X9020B2 |
| A3A6C16 | 0160-3451 | 1 | | CAPACITOR-FXD .01UF +80-20% 100VDC CER | 28480 | 0160-3451 |
| A3A6C17 | 0160-3460 | 2 | | CAPACITOR-FXD .05UF +80-20% 100VDC CER | 28480 | 0160-3460 |
| A3A6C18 | 0160-3451 | 1 | | CAPACITOR-FXD .01UF +80-20% 100VDC CER | 28480 | 0160-3451 |
| A3A6C19 | 0160-3877 | 5 | | CAPACITOR-FXD 100PF +-20% 200VDC CER | 28480 | 0160-3877 |
| A3A6CR1 | 1901-0033 | 2 | | DIODE-GEN PRP 180V 200MA DO-7 | 28480 | 1901-0033 |
| A3A6CR2 | 1901-0040 | 1 | 18 | DIODE-SWITCHING 30V 50MA 2NS DO-35 | 28480 | 1901-0040 |
| A3A6CR3 | 1901-0040 | 1 | | DIODE-SWITCHING 30V 50MA 2NS DO-35 | 28480 | 1901-0040 |
| A3A6CR4 | | | | NOT ASSIGNED | | |
| A3A6CR5 | 1901-0033 | 2 | | DIODE-GEN PRP 180V 200MA DO-7 | 28480 | 1901-0033 |
| A3A6CR6 | 1901-0033 | 2 | | DIODE-GEN PRP 180V 200MA DO-7 | 28480 | 1901-0033 |
| A3A6CR7 | 1901-0033 | 2 | | DIODE-GEN PRP 180V 200MA DO-7 | 28480 | 1901-0033 |
| A3A6CR8 | 1901-0040 | 1 | | DIODE-SWITCHING 30V 50MA 2NS DO-35 | 28480 | 1901-0040 |
| A3A6CR9 | 1901-0033 | 2 | | DIODE-GEN PRP 180V 200MA DO-7 | 28480 | 1901-0033 |
| A3A6CR10 | 1901-0033 | 2 | | DIODE-GEN PRP 180V 200MA DO-7 | 28480 | 1901-0033 |
| A3A6CR11 | 1901-0040 | 1 | | DIODE-SWITCHING 30V 50MA 2NS DO-35 | 28480 | 1901-0040 |
| A3A6MP1 | 1205-0065 | 8 | 1 | HEAT SINK TO-66-CS | 28480 | 1205-0065 |
| A3A6MP2 | 5000-9043 | 6 | | PIN-P.C. BOARD EXTRACTOR | 28480 | 5000-9043 |
| A3A6MP3 | 5040-6843 | 2 | | BOARD EXTRACTOR | 28480 | 5040-6843 |
| A3A6MP4 | 2200-0107 | 6 | | SCREW-MACH 4-40 .375-IN-LG PAN-HD-POZI | 00000 | ORDER BY DESCRIPTION |
| A3A6MP5 | | | | NOT ASSIGNED | | |
| A3A6MP6 | 2190-0003 | 8 | 4 | WASHER-LK HLCL NO. 4 .115-IN-ID | 28480 | 2190-0003 |
| A3A6MP7 | 2260-0001 | 5 | 4 | NUT-HEX-DBL-CHAM 4-40-THD .094-IN-THK | 28480 | 2260-0001 |

See introduction to this section for ordering information
*Indicates factory selected value
†Backdating information in Section VII



www.valuetronics.com

Table 6-3. Replaceable Parts

| Reference Designation | HP Part Number | CD | Qty | Description | Mfr Code | Mfr Part Number |
|---|---|---|---|---|---|---|
| A3A6Q1 | 1854-0237 | 7 | 1 | TRANSISTOR NPN SI TO-66 PD=20W FT=10MHZ | 28480 | 1854-0237 |
| A3A6Q2 | 1854-0404 | 0 | | TRANSISTOR NPN SI TO-18 PD=360MW | 28480 | 1854-0404 |
| A3A6Q3 | 1854-0022 | 8 | 2 | TRANSISTOR NPN SI TO-39 PD=700MW | 07263 | S17843 |
| A3A6Q4 | 1854-0232 | 2 | 1 | TRANSISTOR NPN SI TO-39 PD=1W FT=15MHZ | 28480 | 1854-0232 |
| A3A6Q5 | 1853-0038 | 4 | 1 | TRANSISTOR PNP SI TO-39 PD=1W FT=100MHZ | 28480 | 1853-0038 |
| A3A6Q6 | 1853-0404 | 8 | 1 | TRANSISTOR PNP SI PD=500MW FT=1.8GHZ | 01295 | AST4260 |
| A3A6Q7 | 1853-0007 | 7 | | TRANSISTOR PNP 2N3251 SI TO-18 PD=360MW | 04713 | 2N3251 |
| A3A6Q8 | 1854-0022 | 8 | | TRANSISTOR NPN SI TO-39 PD=700MW | 07263 | S17843 |
| A3A6Q9 | 1854-0712 | 3 | | TRANSISTOR-DUAL NPN PD=1.8W | 28480 | 1854-0712 |
| A3A6Q10 | 1853-0007 | 7 | | TRANSISTOR PNP 2N3251 SI TO-18 PD=360MW | 04713 | 2N3251 |
| A3A6Q11 | 1853-0050 | 0 | 2 | TRANSISTOR PNP SI TO-18 PD=360MW | 28480 | 1853-0050 |
| A3A6Q12 | 1853-0012 | 4 | | TRANSISTOR PNP 2N2904A SI TO-39 PD=600MW | 01295 | 2N2904A |
| A3A6Q13 | 1853-0050 | 0 | | TRANSISTOR PNP SI TO-18 PD=360MW | 28480 | 1853-0050 |
| A3A6R1 | | | | NOT ASSIGNED | | |
| A3A6R2 | | | | NOT ASSIGNED | | |
| A3A6R3 | 0757-0456 | 5 | 1 | RESISTOR 43.2K 1% .125W F TC=0+-100 | 24546 | C4-1/8-T0-4322-F |
| A3A6R4 | 0698-4492 | 1 | 1 | RESISTOR 32.4K 1% .125W F TC=0+-100 | 24546 | C4-1/8-T0-3242-F |
| A3A6R5 | 0757-0440 | 7 | | RESISTOR 7.5K 1% .125W F TC=0+-100 | 24546 | C4-1/8-T0-7501-F |
| A3A6R6 | 0757-0440 | 7 | | RESISTOR 7.5K 1% .125W F TC=0+-100 | 24546 | C4-1/8-T0-7501-F |
| A3A6R7 | 0698-0083 | 8 | | RESISTOR 1.96K 1% .125W F TC=0+-100 | 24546 | C4-1/8-T0-1961-F |
| A3A6R8 | 0698-3440 | 7 | | RESISTOR 196 1% .125W F TC=0+-100 | 24546 | C4-1/8-T0-196R-F |
| A3A6R9 | 0757-0346 | 2 | | RESISTOR 10 1% .125W F TC=0+-100 | 24546 | C4-1/8-T0-10R0-F |
| A3A6R10 | 0757-0465 | 6 | 4 | RESISTOR 100K 1% .125W F TC=0+-100 | 24546 | C4-1/8-T0-1003-F |
| A3A6R11 | 0698-3157 | 3 | | RESISTOR 19.6K 1% .125W F TC=0+-100 | 24546 | C4-1/8-T0-1962-F |
| A3A6R12 | 0757-0442 | 9 | | RESISTOR 10K 1% .125W F TC=0+-100 | 24546 | C4-1/8-T0-1002-F |
| A3A6R13 | 0698-3440 | 7 | | RESISTOR 196 1% .125W F TC=0+-100 | 24546 | C4-1/8-T0-196R-F |
| A3A6R14 | 0757-0401 | 0 | | RESISTOR 100 1% .125W F TC=0+-100 | 24546 | C4-1/8-T0-101-F |
| A3A6R15 | 0757-0421 | 4 | | RESISTOR 825 1% .125W F TC=0+-100 | 24546 | C4-1/8-T0-825R-F |
| A3A6R16 | 0811-3440 | 9 | 1 | RESISTOR 125 1% 25W PW TC=0+-2 | 28480 | 0811-3440 |
| A3A6R17 | 0757-0465 | 6 | | RESISTOR 100K 1% .125W F TC=0+-100 | 24546 | C4-1/8-T0-1003-F |
| A3A6R18 | 0757-0442 | 9 | | RESISTOR 10K 1% .125W F TC=0+-100 | 24546 | C4-1/8-T0-1002-F |
| A3A6R19 | 0757-0442 | 9 | | RESISTOR 10K 1% .125W F TC=0+-100 | 24546 | C4-1/8-T0-1002-F |
| A3A6R20 | 0698-3155 | 1 | | RESISTOR 4.64K 1% .125W F TC=0+-100 | 24546 | C4-1/8-T0-4641-F |
| A3A6R21 | 0698-3155 | 1 | | RESISTOR 4.64K 1% .125W F TC=0+-100 | 24546 | C4-1/8-T0-4641-F |
| A3A6R22 | 0757-0290 | 5 | | RESISTOR 6.19K 1% .125W F TC=0+-100 | 19701 | MF4C1/8-T0-6191-F |
| A3A6R23 | 0757-0346 | 2 | | RESISTOR 10 1% .125W F TC=0+-100 | 24546 | C4-1/8-T0-10R0-F |
| A3A6R24 | 0811-2936 | 6 | 1 | RESISTOR 15 .1% .5W PWW TC=0+-5 | 14140 | 1251-1/4-C-15R-B |
| A3A6R25 | 2100-0635 | 3 | 2 | RESISTOR-TRMR 2K 10% C SIDE-ADJ 20-TRN | 28480 | 2100-0636 |
| A3A6R26 | 0757-0438 | 3 | | RESISTOR 5.11K 1% .125W F TC=0+-100 | 24546 | C4-1/8-T0-5111-F |
| A3A6R27 | 0757-0438 | 3 | | RESISTOR 5.11K 1% .125W F TC=0+-100 | 24546 | C4-1/8-T0-5111-F |
| A3A6R28 | 0757-0467 | 8 | 2 | RESISTOR 121K 1% .125W F TC=0+-100 | 24546 | C4-1/8-T0-1213-F |
| A3A6R29 | 0757-0346 | 2 | | RESISTOR 10 1% .125W F TC=0+-100 | 24546 | C4-1/8-T0-10R0-F |
| A3A6R30 | 0698-8025 | 4 | 1 | RESISTOR 1.91K .25% .125W F TC=0+-50 | 19701 | MF4C1/8-T2-1911-C |
| A3A6R31 | 0757-0402 | 1 | | RESISTOR 110 1% .125W F TC=0+-100 | 24546 | C4-1/8-T0-111-F |
| A3A6R32 | 0757-0458 | 7 | | RESISTOR 51.1K 1% .125W F TC=0+-100 | 24546 | C4-1/8-T0-5112-F |
| A3A6R33 | 0757-0428 | 1 | | RESISTOR 1.62K 1% .125W F TC=0+-100 | 24546 | C4-1/8-T0-1621-F |
| A3A6R34 | 2100-0635 | 3 | | RESISTOR-TRMR 2K 10% C SIDE-ADJ 20-TRN | 28480 | 2100-0635 |
| A3A6R35 | 0698-3153 | 9 | | RESISTOR 3.83K 1% .125W F TC=0+-100 | 24546 | C4-1/8-T0-3831-F |
| A3A6R36 | 0698-3447 | 4 | | RESISTOR 422 1% .125W F TC=0+-100 | 24546 | C4-1/8-T0-422R-F |
| A3A6R37 | 0757-0458 | 7 | | RESISTOR 51.1K 1% .125W F TC=0+-100 | 24546 | C4-1/8-T0-5112-F |
| A3A6R38 | 0698-5673 | 2 | 1 | RESISTOR 3.9K 1% .125W F TC=0+-25 | 28480 | 0698-5673 |
| A3A6R39 | 0698-3155 | 1 | | RESISTOR 4.64K 1% .125W F TC=0+-100 | 24546 | C4-1/8-T0-4641-F |
| A3A6R40 | 0698-8420 | 3 | 1 | RESISTOR 4.22K 1% .125W F TC=0+-25 | 19701 | MF4C1/8-T9-4221-F |
| A3A6R41 | 0757-0401 | 0 | | RESISTOR 100 1% .125W F TC=0+-100 | 24546 | C4-1/8-T0-101-F |
| A3A6R42 | 0757-0346 | 2 | | RESISTOR 10 1% .125W F TC=0+-100 | 24546 | C4-1/8-T0-10R0-F |
| A3A6TP1 | 1251-0600 | 0 | | CONNECTOR-SGL CONT PIN 1.14-MM-BSC-SZ SQ | 28480 | 1251-0600 |
| A3A6TP2 | 1251-0600 | 0 | | CONNECTOR-SGL CONT PIN 1.14-MM-BSC-SZ SQ | 28480 | 1251-0600 |
| A3A6TP3 | 1251-0600 | 0 | | CONNECTOR-SGL CONT PIN 1.14-MM-BSC-SZ SQ | 28480 | 1251-0600 |
| A3A6TP4 | 1251-0600 | 0 | | CONNECTOR-SGL CONT PIN 1.14-MM-BSC-SZ SQ | 28480 | 1251-0600 |
| A3A6TP5 | 1251-0600 | 0 | | CONNECTOR-SGL CONT PIN 1.14-MM-BSC-SZ SQ | 28480 | 1251-0600 |
| A3A6U1 | 1826-0092 | 3 | | IC OP AMP GP DUAL TO-99 PKG | 28480 | 1826-0092 |
| A3A6VR1 | 1902-0680 | 7 | 1 | DIODE-ZNR 1N827 6.2V 5% DO-7 PD=.4W | 24046 | 1N827 |
| A3A6VR2 | 1902-3404 | 9 | | DIODE-ZNR 82.5V 5% DO-7 PD=.4W TC=+.082% | 28480 | 1902-3404 |
| A3A6VR3 | 1902-3323 | 1 | 1 | DIODE-ZNR 42.2V 5% DO-35 PD=.4W TC=+.08% | 28480 | 1902-3323 |
| A3A6VR4 | 1902-0025 | 4 | | DIODE-ZNR 10V 5% DO-35 PD=.4W TC=+.06% | 28480 | 1902-0025 |

See introduction to this section for ordering information
*Indicates factory selected value
†Backdating information in Section VII



www.valuetronics.com

A3

Table 6-3. Replaceable Parts

| Reference Designation | HP Part Number | C D | Qty | Description | Mfr Code | Mfr Part Number |
|---|---|---|---|---|---|---|
| A3A7 | 86701-60017 | 9 | 1 | FM DRIVER ASSEMBLY | 28480 | 86701-60017 |
| A3A7C1 | 0160-0578 | 7 | 4 | CAPACITOR-FXD .047UF +-1% 50VDC | 28480 | 0160-0578 |
| A3A7C2 | 0160-3879 | 7 | | CAPACITOR-FXD .01UF +-20% 100VDC CER | 28480 | 0160-3879 |
| A3A7C3 | 0160-0578 | 7 | | CAPACITOR-FXD .047UF +-1% 50VDC | 28480 | 0160-0578 |
| A3A7C4 | 0160-0573 | 2 | 1 | CAPACITOR-FXD 4700PF +-20% 100VDC CER | 28480 | 0160-0573 |
| A3A7C5 | 0160-0127 | 2 | | CAPACITOR-FXD 1UF +-20% 25VDC CER | 28480 | 0160-0127 |
| A3A7C6 | 0160-3874 | 2 | 4 | CAPACITOR-FXD 10PF +-.5PF 200VDC CER | 28480 | 0160-3874 |
| A3A7C7 | 0160-0127 | 2 | | CAPACITOR-FXD 1UF +-20% 25VDC CER | 28480 | 0160-0127 |
| A3A7C8 | 0160-4298 | 6 | | CAPACITOR-FXD 4700PF +-20% 250VDC CER | 56289 | C067F251H472MS22-CDH |
| A3A7C9 | 0160-2055 | 9 | | CAPACITOR-FXD .01UF +80-20% 100VDC CER | 28480 | 0160-2055 |
| A3A7C10 | 0160-3879 | 7 | | CAPACITOR-FXD .01UF +-20% 100VDC CER | 28480 | 0160-3879 |
| A3A7C11 | 0160-4084 | 8 | | CAPACITOR-FXD .1UF +-20% 50VDC CER | 28480 | 0160-4084 |
| A3A7C12 | 0160-0174 | 9 | 1 | CAPACITOR-FXD .47UF +80-20% 25VDC CER | 28480 | 0160-0174 |
| A3A7C13 | 0160-3879 | 7 | | CAPACITOR-FXD .01UF +-20% 100VDC CER | 28480 | 0160-3879 |
| A3A7C14 | 0180-0491 | 5 | | CAPACITOR-FXD 10UF+-20% 25VDC TA | 28480 | 0180-0491 |
| A3A7C15 | 0180-0197 | 8 | | CAPACITOR-FXD 2.2UF+-10% 20VDC TA | 56289 | 150D225X9020A2 |
| A3A7C16 | 0180-0197 | 8 | | CAPACITOR-FXD 2.2UF+-10% 20VDC TA | 56289 | 150D225X9020A2 |
| A3A7C17 | 0160-3879 | 7 | | CAPACITOR-FXD .01UF +-20% 100VDC CER | 28480 | 0160-3879 |
| A3A7C18 | 0160-4084 | 8 | | CAPACITOR-FXD .1UF +-20% 50VDC CER | 28480 | 0160-4084 |
| A3A7C19* | 0160-0134 | 1 | 1 | CAPACITOR-FXD 220PF +-5% 300VDC MICA | 28480 | 0160-0134 |
| A3A7C20 | 0160-3533 | 0 | 1 | CAPACITOR-FXD 470PF +-5% 300VDC MICA | 28480 | 0160-3533 |
| A3A7C21 | 0160-3878 | 6 | | CAPACITOR-FXD 1000PF +-20% 100VDC CER | 28480 | 0160-3878 |
| A3A7C22 | 0160-0158 | 9 | 1 | CAPACITOR-FXD 5600PF +-10% 200VDC POLYE | 28480 | 0160-0158 |
| A3A7C23 | 0180-1719 | 2 | 1 | CAPACITOR-FXD 22UF+-10% 25VDC TA | 06001 | 69F14698 |
| A3A7C24 | 0160-3879 | 7 | | CAPACITOR-FXD .01UF +-20% 100VDC CER | 28480 | 0160-3879 |
| A3A7C25 | 0160-3879 | 7 | | CAPACITOR-FXD .01UF +-20% 100VDC CER | 28480 | 0160-3879 |
| A3A7C26 | 0180-0118 | 1 | | CAPACITOR-FXD 6.8UF+-10% 35VDC TA | 56289 | 150D685X9035B2 |
| A3A7C27 | 0160-3879 | 7 | | CAPACITOR-FXD .01UF +-20% 100VDC CER | 28480 | 0160-3879 |
| A3A7C28 | 0180-0228 | 6 | | CAPACITOR-FXD 22UF+-10% 15VDC TA | 56289 | 150D226X9015B2 |
| A3A7C29 | 0160-2055 | 9 | | CAPACITOR-FXD .01UF +80-20% 100VDC CER | 28480 | 0160-2055 |
| A3A7C30 | 0180-0118 | 1 | | CAPACITOR-FXD 6.8UF+-10% 35VDC TA | 56289 | 150D685X9035B2 |
| A3A7C31 | 0160-3879 | 7 | | CAPACITOR-FXD .01UF +-20% 100VDC CER | 28480 | 0160-3879 |
| A3A7C32 | 0160-3879 | 7 | | CAPACITOR-FXD .01UF +-20% 100VDC CER | 28480 | 0160-3879 |
| A3A7C33 | 0160-4084 | 8 | | CAPACITOR-FXD .1UF +-20% 50VDC CER | 28480 | 0160-4084 |
| A3A7C34 | 0160-4084 | 8 | | CAPACITOR-FXD .1UF +-20% 50VDC CER | 28480 | 0160-4084 |
| A3A7C35 | 0180-0234 | 4 | 1 | CAPACITOR-FXD 33UF+-20% 75VDC TA | 06001 | 69F286G7 |
| A3A7C36 | 0180-0228 | 6 | | CAPACITOR-FXD 22UF+-10% 15VDC TA | 56289 | 150D226X9015B2 |
| A3A7C37 | 0160-3879 | 7 | | CAPACITOR-FXD .01UF +-20% 100VDC CER | 28480 | 0160-3879 |
| A3A7C38 | 0160-3879 | 7 | | CAPACITOR-FXD .01UF +-20% 100VDC CER | 28480 | 0160-3879 |
| A3A7C39 | 0180-0491 | 5 | | CAPACITOR-FXD 10UF+-20% 25VDC TA | 28480 | 0180-0491 |
| A3A7C40 | 0160-3879 | 7 | | CAPACITOR-FXD .01UF +-20% 100VDC CER | 28480 | 0160-3879 |
| A3A7C41 | 0160-3879 | 7 | | CAPACITOR-FXD .01UF +-20% 100VDC CER | 28480 | 0160-3879 |
| A3A7C42 | 0160-2202 | 8 | 1 | CAPACITOR-FXD 75PF +-5% 300VDC MICA | 28480 | 0160-2202 |
| A3A7C43 | 0140-0194 | 1 | 2 | CAPACITOR-FXD 110PF +-5% 300VDC MICA | 72136 | DM15F111J0300WV1CR |
| A3A7C44 | 0160-3872 | 0 | 1 | CAPACITOR-FXD 2.2PF +-.25PF 200VDC CER | 28480 | 0160-3872 |
| A3A7C45 | 0160-0578 | 7 | | CAPACITOR-FXD .047UF +-1% 50VDC | 28480 | 0160-0578 |
| A3A7C46 | 0160-0578 | 7 | | CAPACITOR-FXD .047UF +-1% 50VDC | 28480 | 0160-0578 |
| A3A7C47 | 0160-3878 | 6 | | CAPACITOR-FXD 1000PF +-20% 100VDC CER | 28480 | 0160-3878 |
| A3A7C48* | 0160-2248 | 2 | 1 | CAPACITOR-FXD 4.3PF +-.25PF 500VDC CER | 28480 | 0160-2248 |
| A3A7C49 | 0160-3491 | 9 | 1 | CAPACITOR-FXD .47UF +-20% 50VDC CER | 28480 | 0160-3491 |
| A3A7C50 | 0160-3874 | 2 | | CAPACITOR-FXD 10PF +-.5PF 200VDC CER | 28480 | 0160-3874 |
| A3A7CR1 | 1901-0040 | 1 | | DIODE-SWITCHING 30V 50MA 2NS DO-35 | 28480 | 1901-0040 |
| A3A7CR2 | 1901-0040 | 1 | | DIODE-SWITCHING 30V 50MA 2NS DO-35 | 28480 | 1901-0040 |
| A3A7CR3 | 1901-0040 | 1 | | DIODE-SWITCHING 30V 50MA 2NS DO-35 | 28480 | 1901-0040 |
| A3A7CR4 | 1901-0040 | 1 | | DIODE-SWITCHING 30V 50MA 2NS DO-35 | 28480 | 1901-0040 |
| A3A7CR5 | 1901-0040 | 1 | | DIODE-SWITCHING 30V 50MA 2NS DO-35 | 28480 | 1901-0040 |
| A3A7CR6 | 1901-0040 | 1 | | DIODE-SWITCHING 30V 50MA 2NS DO-35 | 28480 | 1901-0040 |
| A3A7CR7 | 1901-0040 | 1 | | DIODE-SWITCHING 30V 50MA 2NS DO-35 | 28480 | 1901-0040 |
| A3A7K1 | 0490-0564 | 0 | 2 | RELAY-REED 1C 350MA 70VAC 5VDC-COIL 10VA | 28480 | 0490-0564 |
| A3A7K2 | 0490-0564 | 0 | | RELAY-REED 1C 350MA 70VAC 5VDC-COIL 10VA | 28480 | 0490-0564 |
| A3A7L1 | 9100-2259 | 8 | | INDUCTOR RF-CH-MLD 1.5UH 10% .105DX.26LG | 28480 | 9100-2259 |

See introduction to this section for ordering information
*Indicates factory selected value
†Backdating information in Section VII



www.valuetronics.com

Table 6-3. Replaceable Parts

| Reference Designation | HP Part Number | C D | Qty | Description | Mfr Code | Mfr Part Number |
|---|---|---|---|---|---|---|
| A3A7MP1 | 1205-0011 | 0 | 2 | HEAT SINK TO-5/TO-39-CS | 28480 | 1205-0011 |
| A3A7MP2 | 1205-0037 | 0 | 2 | HEAT SINK TO-18-CS | 28480 | 1205-0037 |
| A3A7MP3 | 1200-0173 | 5 | | INSULATOR-XSTR DAP-GL | 28480 | 1200-0173 |
| A3A7Q1 | 1854-0013 | 7 | 1 | TRANSISTOR NPN 2N2218A SI TO-5 PD=800MW | 04713 | 2N2218A |
| A3A7Q2 | 1853-0012 | 4 | | TRANSISTOR PNP 2N2904A SI TO-39 PD=600MW | 01295 | 2N2904A |
| A3A7Q3 | 1854-0401 | 7 | 1 | TRANSISTOR NPN SI TO-72 PD=200MW | 28480 | 1854-0401 |
| A3A7Q4 | 1854-0404 | 0 | | TRANSISTOR NPN SI TO-18 PD=360MW | 28480 | 1854-0404 |
| A3A7Q5 | 1854-0404 | 0 | | TRANSISTOR NPN SI TO-18 PD=360MW | 28480 | 1854-0404 |
| A3A7Q6 | 1854-0345 | 8 | | TRANSISTOR NPN 2N5179 SI TO-72 PD=200MW | 04713 | 2N5179 |
| A3A7Q7 | 1854-0023 | 9 | 1 | TRANSISTOR NPN SI TO-18 PD=360MW | 28480 | 1854-0023 |
| A3A7Q8 | 1854-0247 | 9 | | TRANSISTOR NPN SI TO-39 PD=1W FT=800MHZ | 28480 | 1854-0247 |
| A3A7Q9 | 1853-0451 | 5 | | TRANSISTOR PNP 2N3799 SI TO-18 PD=360MW | 01295 | 2N3799 |
| A3A7Q10 | 1853-0451 | 5 | | TRANSISTOR PNP 2N3799 SI TO-18 PD=360MW | 01295 | 2N3799 |
| A3A7Q11 | 1854-0404 | 0 | | TRANSISTOR NPN SI TO-18 PD=360MW | 28480 | 1854-0404 |
| A3A7Q12 | 1855-0020 | 8 | 1 | TRANSISTOR J-FET N-CHAN D-MODE TO-18 SI | 28480 | 1855-0020 |
| A3A7Q13 | 1853-0281 | 9 | 1 | TRANSISTOR PNP 2N2907A SI TO-18 PD=400MW | 04713 | 2N2907A |
| A3A7Q14 | 1853-0451 | 5 | | TRANSISTOR PNP 2N3799 SI TO-18 PD=360MW | 01295 | 2N3799 |
| A3A7Q15 | 1855-0417 | 7 | 1 | TRANSISTOR J-FET N-CHAN D-MODE TO-18 SI | 28480 | 1855-0417 |
| A3A7R1 | 0757-0447 | 4 | 2 | RESISTOR 16.2K 1% .125W F TC=0+-100 | 24546 | C4-1/8-T0-1622-F |
| A3A7R2 | 0698-3150 | 6 | | RESISTOR 2.37K 1% .125W F TC=0+-100 | 24546 | C4-1/8-T0-2371-F |
| A3A7R3 | 0757-0443 | 0 | | RESISTOR 11K 1% .125W F TC=0+-100 | 24546 | C4-1/8-T0-1102-F |
| A3A7R4 | 0757-0465 | 6 | | RESISTOR 100K 1% .125W F TC=0+-100 | 24546 | C4-1/8-T0-1003-F |
| A3A7R5 | 0698-7277 | 6 | 1 | RESISTOR 51.1K 1% .05W F TC=0+-100 | 24546 | C3-1/8-T0-5112-F |
| A3A7R6 | 0698-7258 | 3 | 1 | RESISTOR 8.25K 1% .05W F TC=0+-100 | 24546 | C3-1/8-T0-8251-F |
| A3A7R7 | 0698-0083 | 8 | | RESISTOR 1.96K 1% .125W F TC=0+-100 | 24546 | C4-1/8-T0-1961-F |
| A3A7R8 | 0757-0465 | 6 | | RESISTOR 100K 1% .125W F TC=0+-100 | 24546 | C4-1/8-T0-1003-F |
| A3A7R9 | 0698-3441 | 8 | | RESISTOR 215 1% .125W F TC=0+-100 | 24546 | C4-1/8-T0-215R-F |
| A3A7R10 | 0698-0085 | 0 | | RESISTOR 2.61K 1% .125W F TC=0+-100 | 24546 | C4-1/8-T0-2611-F |
| A3A7R11 | 0698-3432 | 7 | 1 | RESISTOR 26.1 1% .125W F TC=0+-100 | 03888 | PME55-1/8-T0-26R1-F |
| A3A7R12 | | | | NOT ASSIGNED | | |
| A3A7R13 | 0698-3154 | 0 | | RESISTOR 4.22K 1% .125W F TC=0+-100 | 24546 | C4-1/8-T0-4221-F |
| A3A7R14 | | | | NOT ASSIGNED | | |
| A3A7R15 | 0757-0346 | 2 | | RESISTOR 10 1% .125W F TC=0+-100 | 24546 | C4-1/8-T0-10R0-F |
| A3A7R16 | 0757-0346 | 2 | | RESISTOR 10 1% .125W F TC=0+-100 | 24546 | C4-1/8-T0-10R0-F |
| A3A7R17 | 0757-0346 | 2 | | RESISTOR 10 1% .125W F TC=0+-100 | 24546 | C4-1/8-T0-10R0-F |
| A3A7R18 | 0757-0346 | 2 | | RESISTOR 10 1% .125W F TC=0+-100 | 24546 | C4-1/8-T0-10R0-F |
| A3A7R19 | 0757-0346 | 2 | | RESISTOR 10 1% .125W F TC=0+-100 | 24546 | C4-1/8-T0-10R0-F |
| A3A7R20 | 0757-0346 | 2 | | RESISTOR 10 1% .125W F TC=0+-100 | 24546 | C4-1/8-T0-10R0-F |
| A3A7R21 | 0757-0401 | 0 | | RESISTOR 100 1% .125W F TC=0+-100 | 24546 | C4-1/8-T0-101-F |
| A3A7R22 | 0698-3155 | 1 | | RESISTOR 4.64K 1% .125W F TC=0+-100 | 24546 | C4-1/8-T0-4641-F |
| A3A7R23 | 0698-3444 | 1 | | RESISTOR 316 1% .125W F TC=0+-100 | 24546 | C4-1/8-T0-316R-F |
| A3A7R24 | 0698-7224 | 3 | | RESISTOR 316 1% .05W F TC=0+-100 | 24546 | C3-1/8-T0-316R-F |
| A3A7R25 | | | | NOT ASSIGNED | | |
| A3A7R26 | 0698-7276 | 5 | 2 | RESISTOR 46.4K 1% .05W F TC=0+-100 | 24546 | C3-1/8-T0-4642-F |
| A3A7R27 | 0698-7276 | 5 | | RESISTOR 46.4K 1% .05W F TC=0+-100 | 24546 | C3-1/8-T0-4642-F |
| A3A7R28 | 2100-3353 | 8 | 1 | RESISTOR-TRMR 20K 10% C SIDE-ADJ 1-TRN | 28480 | 2100-3353 |
| A3A7R29 | 0698-0083 | 8 | | RESISTOR 1.96K 1% .125W F TC=0+-100 | 24546 | C4-1/8-T0-1961-F |
| A3A7R30 | 0683-1555 | 0 | 2 | RESISTOR 1.5M 5% .25W FC TC=-900/+1100 | 01121 | CB1555 |
| A3A7R31 | 0698-4414 | 7 | 2 | RESISTOR 158 1% .125W F TC=0+-100 | 24546 | C4-1/8-T0-158R-F |
| A3A7R32 | 0698-3157 | 3 | | RESISTOR 19.6K 1% .125W F TC=0+-100 | 24546 | C4-1/8-T0-1962-F |
| A3A7R33 | 0698-7271 | 0 | 1 | RESISTOR 28.7K 1% .05W F TC=0+-100 | 24546 | C3-1/8-T0-2872-F |
| A3A7R34 | 0698-7283 | 4 | 1 | RESISTOR 90.9K 1% .05W F TC=0+-100 | 24546 | C3-1/8-T0-9092-F |
| A3A7R35 | 0757-0458 | 7 | | RESISTOR 51.1K 1% .125W F TC=0+-100 | 24546 | C4-1/8-T0-5112-F |
| A3A7R36 | 0698-7272 | 1 | 1 | RESISTOR 31.6K 1% .05W F TC=0+-100 | 24546 | C3-1/8-T0-3162-F |
| A3A7R37 | 0757-0416 | 7 | | RESISTOR 511 1% .125W F TC=0+-100 | 24546 | C4-1/8-T0-511R-F |
| A3A7R38 | 0757-0316 | 6 | 1 | RESISTOR 42.2 1% .125W F TC=0+-100 | 24546 | C4-1/8-T0-42R2-F |
| A3A7R39 | 0698-3155 | 1 | | RESISTOR 4.64K 1% .125W F TC=0+-100 | 24546 | C4-1/8-T0-4641-F |
| A3A7R40 | 2100-3354 | 9 | 1 | RESISTOR-TRMR 50K 10% C SIDE-ADJ 1-TRN | 28480 | 2100-3354 |
| A3A7R41 | 0757-0458 | 7 | | RESISTOR 51.1K 1% .125W F TC=0+-100 | 24546 | C4-1/8-T0-5112-F |
| A3A7R42 | 0698-3153 | 9 | | RESISTOR 3.83K 1% .125W F TC=0+-100 | 24546 | C4-1/8-T0-3831-F |
| A3A7R43 | 0698-3152 | 8 | 2 | RESISTOR 3.48K 1% .125W F TC=0+-100 | 24546 | C4-1/8-T0-3481-F |
| A3A7R44 | 0698-7229 | 8 | | RESISTOR 511 1% .05W F TC=0+-100 | 24546 | C3-1/8-T0-511R-F |
| A3A7R45 | 0757-0416 | 7 | | RESISTOR 511 1% .125W F TC=0+-100 | 24546 | C4-1/8-T0-511R-F |

A3

See introduction to this section for ordering information
*Indicates factory selected value
†Backdating information in Section VII



www.valuetronics.com

A3

Table 6-3. Replaceable Parts

| Reference Designation | HP Part Number | CD | Qty | Description | Mfr Code | Mfr Part Number |
|---|---|---|---|---|---|---|
| A3A7R46 | 2100-3350 | 5 | 1 | RESISTOR-TRMR 200 10% C SIDE-ADJ 1-TRN | 28480 | 2100-3350 |
| A3A7R47 | 0757-0420 | 3 | | RESISTOR 750 1% .125W F TC=0+-100 | 24546 | C4-1/8-T0-751-F |
| A3A7R48 | 0757-0346 | 2 | | RESISTOR 10 1% .125W F TC=0+-100 | 24546 | C4-1/8-T0-10R0-F |
| A3A7R49 | 0698-3428 | 2 | | RESISTOR 19.6 1% .125W F TC=0+-100 | 03888 | PME55-1/8-T0-19R6-F |
| A3A7R50 | 0757-0346 | 2 | | RESISTOR 10 1% .125W F TC=0+-100 | 24546 | C4-1/8-T0-10R0-F |
| A3A7R51 | 0757-0346 | 2 | | RESISTOR 10 1% .125W F TC=0+-100 | 24546 | C4-1/8-T0-10R0-F |
| A3A7R52 | 0757-0420 | 3 | | RESISTOR 750 1% .125W F TC=0+-100 | 24546 | C4-1/8-T0-751-F |
| A3A7R53 | 0698-0083 | 8 | | RESISTOR 1.96K 1% .125W F TC=0+-100 | 24546 | C4-1/8-T0-1961-F |
| A3A7R54 | 0698-3155 | 1 | | RESISTOR 4.64K 1% .125W F TC=0+-100 | 24546 | C4-1/8-T0-4641-F |
| A3A7R55 | 0698-3443 | 0 | | RESISTOR 287 1% .125W F TC=0+-100 | 24546 | C4-1/8-T0-287R-F |
| A3A7R56 | 0698-3150 | 6 | | RESISTOR 2.37K 1% .125W F TC=0+-100 | 24546 | C4-1/8-T0-2371-F |
| A3A7R57 | 0757-0442 | 9 | | RESISTOR 10K 1% .125W F TC=0+-100 | 24546 | C4-1/8-T0-1002-F |
| A3A7R58 | 0757-0441 | 8 | | RESISTOR 8.25K 1% .125W F TC=0+-100 | 24546 | C4-1/8-T0-8251-F |
| A3A7R59 | 0757-0441 | 8 | | RESISTOR 8.25K 1% .125W F TC=0+-100 | 24546 | C4-1/8-T0-8251-F |
| A3A7R60 | 0757-0447 | 4 | | RESISTOR 16.2K 1% .125W F TC=0+-100 | 24546 | C4-1/8-T0-1622-F |
| A3A7R61* | 0698-0083 | 8 | 14 | RESISTOR 1.96K 1% .125W F TC=0+-100 | 24546 | C4-1/8-T0-1961-F |
| A3A7R62 | 0698-3447 | 4 | | RESISTOR 422 1% .125W F TC=0+-100 | 24546 | C4-1/8-T0-422R-F |
| A3A7R63 | 0698-3438 | 3 | | RESISTOR 147 1% .125W F TC=0+-100 | 24546 | C4-1/8-T0-147R-F |
| A3A7R64 | | | | NOT ASSIGNED | | |
| A3A7R65* | 0757-0438 | 3 | 21 | RESISTOR 5.11K 1% .125W F TC=0+-100 | 24546 | C4-1/8-T0-5111-F |
| A3A7R66 | 0698-3442 | 9 | | RESISTOR 237 1% .125W F TC=0+-100 | 24546 | C4-1/8-T0-237R-F |
| A3A7R67* | 0698-3437 | 2 | 1 | RESISTOR 133 1% .125W F TC=0+-100 | 24546 | C4-1/8-T0-133R-F |
| A3A7R68 | 0757-0419 | 0 | | RESISTOR 681 1% .125W F TC=0+-100 | 24546 | C4-1/8-T0-681R-F |
| A3A7R69 | 0757-0428 | 1 | | RESISTOR 1.62K 1% .125W F TC=0+-100 | 24546 | C4-1/8-T0-1621-F |
| A3A7R70 | 0757-0424 | 7 | 4 | RESISTOR 1.1K 1% .125W F TC=0+-100 | 24546 | C4-1/8-T0-1101-F |
| A3A7R71 | 0686-1525 | 0 | 1 | RESISTOR 1.5K 5% .5W CC TC=0+847 | 01121 | EB1525 |
| A3A7R72 | 0757-0346 | 2 | | RESISTOR 10 1% .125W F TC=0+-100 | 24546 | C4-1/8-T0-10R0-F |
| A3A7R73 | 0757-0802 | 5 | 2 | RESISTOR 162 1% .5W F TC=0+-100 | 28480 | 0757-0802 |
| A3A7R74 | 0757-0394 | 0 | | RESISTOR 51.1 1% .125W F TC=0+-100 | 24546 | C4-1/8-T0-51R1-F |
| A3A7R75* | 0698-6113 | 7 | 1 | RESISTOR 1.82K .25% .125W F TC=0+-100 | 28480 | 0698-6113 |
| A3A7R76 | | | | NOT ASSIGNED | | |
| A3A7R77 | 0757-0420 | 3 | | RESISTOR 750 1% .125W F TC=0+-100 | 24546 | C4-1/8-T0-751-F |
| A3A7R78 | 0757-0802 | 5 | | RESISTOR 162 1% .5W F TC=0+-100 | 28480 | 0757-0802 |
| A3A7R79 | 0696-3452 | 1 | 1 | RESISTOR 147K 1% .125W F TC=0+-100 | 24546 | C4-1/8-T0-1473-F |
| A3A7R80 | 0757-0458 | 7 | | RESISTOR 51.1K 1% .125W F TC=0+-100 | 24546 | C4-1/8-T0-5112-F |
| A3A7R81 | 0698-7224 | 3 | | RESISTOR 316 1% .05W F TC=0+-100 | 24546 | C3-1/8-T0-316R-F |
| A3A7R82 | 0698-7224 | 3 | | RESISTOR 316 1% .05W F TC=0+-100 | 24546 | C3-1/8-T0-316R-F |
| A3A7R83 | 0683-1555 | 0 | | RESISTOR 1.5M 5% .25W FC TC=-900/+1100 | 01121 | CB1555 |
| A3A7R84 | 0698-4414 | 7 | | RESISTOR 158 1% .125W F TC=0+-100 | 24546 | C4-1/8-T0-158R-F |
| A3A7R85 | 0698-7212 | 9 | | RESISTOR 100 1% .05W F TC=0+-100 | 24546 | C3-1/8-T0-100R-F |
| A3A7R86 | 0757-0279 | 0 | | RESISTOR 3.16K 1% .125W F TC=0+-100 | 24546 | C4-1/8-T0-3161-F |
| A3A7TP1 | 1251-0600 | 0 | | CONNECTOR-SGL CONT PIN 1.14-MM-BSC-SZ SQ | 28480 | 1251-0600 |
| A3A7TP2 | 1251-0600 | 0 | | CONNECTOR-SGL CONT PIN 1.14-MM-BSC-SZ SQ | 28480 | 1251-0600 |
| A3A7TP3 | 1251-0600 | 0 | | CONNECTOR-SGL CONT PIN 1.14-MM-BSC-SZ SQ | 28480 | 1251-0600 |
| A3A7TP4 | 1251-0600 | 0 | | CONNECTOR-SGL CONT PIN 1.14-MM-BSC-SZ SQ | 28480 | 1251-0600 |
| A3A7TP5 | 1251-0600 | 0 | | CONNECTOR-SGL CONT PIN 1.14-MM-BSC-SZ SQ | 28480 | 1251-0600 |
| A3A7U1 | 1826-0261 | 8 | | IC OP AMP LOW-NOISE TO-99 PKG | 28480 | 1826-0261 |
| A3A7U2 | 1826-0081 | 0 | 1 | IC OP AMP WB TO-99 PKG | 27014 | LM318H |
| A3A7U3 | 1826-0044 | 5 | 2 | IC OP AMP GP DUAL 14-DIP-C PKG | 07263 | UA739DC |
| A3A8 | 10811B | 2 | 2 | 10 MHZ REF OSC (FOR PARTS LIST REFER TO 10811B OPERATING AND SERVICE MANUAL) | 28480 | 10811B |
| A3A9C1 | 0160-3036 | 8 | 8 | CAPACITOR-FDTHRU 5000PF +80 -20% 200V | 28480 | 0160-3036 |
| A3A9C2 | 0160-3036 | 8 | | CAPACITOR-FDTHRU 5000PF +80 -20% 200V | 28480 | 0160-3036 |
| A3A9C3 | 0160-4748 | 1 | 3 | CAPACITOR-FDTHRU 1000PF 20% 200V CER | 28480 | 0160-4748 |
| A3A9C4 | 0160-3036 | 8 | | CAPACITOR-FDTHRU 5000PF +80 -20% 200V | 28480 | 0160-3036 |
| A3A9C5 | 0160-3036 | 8 | | CAPACITOR-FDTHRU 5000PF +80 -20% 200V | 28480 | 0160-3036 |
| A3A9C6 | 0160-4748 | 1 | | CAPACITOR-FDTHRU 1000PF 20% 200V CER | 28480 | 0160-4748 |
| A3A9C7 | 0160-3036 | 8 | | CAPACITOR-FDTHRU 5000PF +80 -20% 200V | 28480 | 0160-3036 |
| A3A9C8 | 0160-4748 | 1 | | CAPACITOR-FDTHRU 1000PF 20% 200V CER | 28480 | 0160-4748 |
| A3A9C9 | 0160-3036 | 8 | | CAPACITOR-FDTHRU 5000PF +80 -20% 200V | 28480 | 0160-3036 |
| A3A9J1 | 1250-0691 | 7 | 6 | CONNECTOR-RF SMB M SGL-HOLE-FR 50-OHM | 28480 | 1250-0691 |
| A3A9J2 | 1250-0691 | 7 | | CONNECTOR-RF SMB M SGL-HOLE-FR 50-OHM | 28480 | 1250-0691 |
| A3A9J3 | 1250-0691 | 7 | | CONNECTOR-RF SMB M SGL-HOLE-FR 50-OHM | 28480 | 1250-0691 |
| A3A9J4 | 1250-0691 | 7 | | CONNECTOR-RF SMB M SGL-HOLE-FR 50-OHM | 28480 | 1250-0691 |
| A3A9J5 | 1250-0691 | 7 | | CONNECTOR-RF SMB M SGL-HOLE-FR 50-OHM | 28480 | 1250-0691 |

See introduction to this section for ordering information
*Indicates factory selected value
†Backdating information in Section VII



www.valuetronics.com

Table 6-3. Replaceable Parts

| Reference Designation | HP Part Number | C D | Qty | Description | Mfr Code | Mfr Part Number |
|---|---|---|---|---|---|---|
| A3A9J6 | 1250-0691 | 7 | | CONNECTOR-RF SMB M SGL-HOLE-FR 50-OHM | 28480 | 1250-0691 |
| A3A9MP1 | 0520-0247 | 1 | 2 | SCREW-MACH 2-56 .625-IN-LG PAN-HD-POZI | 28480 | 0520-0247 |
| A3A9MP2 | 1250-1142 | 5 | 1 | WASHER-LK INTL T 1/2 IN .26-IN-ID | 28480 | 1250-1142 |
| A3A9MP3 | 1250-1143 | 6 | 1 | NUT-RF CONN,SERIES SMA,HEX,1/4-36 THRD | 16179 | 1707 |
| A3A9MP4 | 1400-0024 | 9 | 1 | CLAMP-CABLE .25-DIA .5-WD NYL | 28480 | 1400-0024 |
| A3A9MP5 | 1251-4459 | 5 | 1 | CLIP-CABLE PLUG RTNG-DUAL INLINE 14 CONT | 28480 | 1251-4459 |
| A3A9MP6 | 2190-0018 | 5 | 25 | WASHER-LK HLCL NO. 6 .141-IN-ID | 28480 | 2190-0018 |
| A3A9MP7 | 2190-0019 | 6 | | WASHER-LK HLCL NO. 4 .115-IN-ID | 28480 | 2190-0019 |
| A3A9MP8 | 6960-0016 | 0 | 4 | PLUG-HOLE TR-HD FOR .125-D-HOLE NYL | 28480 | 6960-0016 |
| A3A9MP9 | 08673-00059 | 4 | 1 | DECK-YTO PHASE LOCK | 28480 | 08673-00059 |
| A3A9MP10 | 86701-00010 | 6 | 1 | COVER-SAMPLER | 28480 | 86701-00010 |
| A3A9MP11 | 86701-00011 | 7 | 1 | COVER-PHASE LOCK | 28480 | 86701-00011 |
| A3A9MP12 | 86701-00054 | 8 | 1 | SPACER-SAMPLER | 28480 | 86701-00054 |
| A3A9MP13 | 86701-20009 | 5 | 1 | HOUSING-CASTING | 28480 | 86701-20009 |
| A3A9MP14 | 86701-40001 | 9 | | EXTRACTOR-P.C. BOARD | 28480 | 86701-40001 |
| A3A9MP15 | 2200-0103 | 2 | | SCREW-MACH 4-40 .25-IN-LG PAN-HD-POZI | 28480 | 2200-0103 |
| A3A9MP16 | 2200-0138 | 3 | 5 | SCREW-MACH 4-40 .188-IN-LG 100 DEG | 28480 | 2200-0138 |
| A3A9MP17 | 2200-0149 | 6 | 3 | SCREW-MACH 4-40 .625-IN-LG PAN-HD-POZI | 00000 | ORDER BY DESCRIPTION |
| A3A9MP18 | 2360-0115 | 4 | 18 | SCREW-MACH 6-32 .312-IN-LG PAN-HD-POZI | 00000 | ORDER BY DESCRIPTION |
| A3A9MP19 | 2360-0197 | 2 | 13 | SCREW-MACH 6-32 .375-IN-LG PAN-HD-POZI | 28480 | 2360-0197 |
| A3A9MP20 | 3050-0010 | 2 | 7 | WASHER-FL MTLC NO. 6 .147-IN-ID | 28480 | 3050-0010 |
| A3A9MP21 | 3050-0105 | 6 | 6 | WASHER-FL MTLC NO. 4 .125-IN-ID | 28480 | 3050-0105 |
| A3A9MP22 | 2190-0124 | 4 | | WASHER-LK INTL T NO. 10 .195-IN-ID | 28480 | 2190-0124 |
| A3A9U1 | 86701-67001 | 5 | 1 | SAMPLER-2-8.5 GHZ | 28480 | 86701-67001 |
| A3A9W1 | 86701-20064 | 2 | 1 | CABLE ASSEMBLY- YTO OUTPUT | 28480 | 86701-20064 |
| A3A9W2 | 86701-20066 | 4 | 1 | CABLE ASSEMBLY- ATTENUATOR OUTPUT | 28480 | 86701-20066 |
| A3A9W3 | 86701-20065 | 3 | 1 | CABLE ASSEMBLY- FILTER INPUT | 28480 | 86701-20065 |
| A3A9W4 | 86701-60052 | 2 | 1 | CABLE ASSEMBLY- COAX, BLACK | 28480 | 86701-60052 |
| A3A9A1 | 0955-0098 | 1 | 2 | DIRECTIONAL COUPLER ASSEMBLY | 28480 | 0955-0098 |
| A3A9A2 | 08673-60089 | 6 | 1 | YTO INTERCONNECT ASSEMBLY | 28480 | 08673-60089 |
| A3A9A2J1 | 1250-0543 | 8 | 1 | CONNECTOR-RF SM-SNP M PC 50-OHM | 28480 | 1250-0543 |
| A3A9A2MP1 | 3050-0079 | 3 | | WASHER-FL NM NO. 2 .094-IN-ID .188-IN-OD | 28480 | 3050-0079 |
| A3A9A2W1 | 86701-60010 | 2 | 1 | CABLE ASSY-YTO LOOP RIBBON | 28480 | 86701-60010 |
| A3A9A2W2 | 86701-60009 | 9 | 1 | CABLE ASSY-YTO LOOP RIBBON | 28480 | 86701-60009 |
| A3A9A3 | 5086-7366 | 2 | 1 | 2.0-6.6 GHZ YTO ASSEMBLY | 28480 | 5086-7366 |
| A3A9A4 | 86701-60024 | 8 | 1 | YTO PHASE DETECTOR ASSEMBLY | 28480 | 86701-60024 |
| A3A9A4C1 | 0160-2307 | 4 | 2 | CAPACITOR-FXD 47PF +-5% 300VDC MICA | 28480 | 0160-2307 |
| A3A9A4C2 | 0160-2307 | 4 | | CAPACITOR-FXD 47PF +-5% 300VDC MICA | 28480 | 0160-2307 |
| A3A9A4C3 | 0160-0574 | 3 | | CAPACITOR-FXD .022UF +-20% 100VDC CER | 28480 | 0160-0574 |
| A3A9A4C4 | 0160-0574 | 3 | | CAPACITOR-FXD .022UF +-20% 100VDC CER | 28480 | 0160-0574 |
| A3A9A4C5 | 0160-3879 | 7 | | CAPACITOR-FXD .01UF +-20% 100VDC CER | 28480 | 0160-3879 |
| A3A9A4C6 | 0160-0574 | 3 | | CAPACITOR-FXD .022UF +-20% 100VDC CER | 28480 | 0160-0574 |
| A3A9A4C7 | | | | NOT ASSIGNED | | |
| A3A9A4C8 | | | | NOT ASSIGNED | | |
| A3A9A4C9 | 0160-3538 | 5 | 2 | CAPACITOR-FXD 750PF +-5% 100VDC MICA | 28480 | 0160-3538 |
| A3A9A4C10 | 0160-3538 | 5 | | CAPACITOR-FXD 750PF +-5% 100VDC MICA | 28480 | 0160-3538 |
| A3A9A4C11 | 0160-0165 | 8 | 1 | CAPACITOR-FXD .056UF +-10% 200VDC POLYE | 28480 | 0160-0165 |
| A3A9A4C12 | 0160-0575 | 4 | | CAPACITOR-FXD .047UF +-20% 50VDC CER | 28480 | 0160-0575 |
| A3A9A4C13 | 0160-3874 | 2 | | CAPACITOR-FXD 10PF +-.5PF 200VDC CER | 28480 | 0160-3874 |
| A3A9A4C14 | 0160-2453 | 1 | 1 | CAPACITOR-FXD .22UF +-10% 80VDC POLYE | 28480 | 0160-2453 |
| A3A9A4C15 | 0160-2055 | 9 | | CAPACITOR-FXD .01UF +80-20% 100VDC CER | 28480 | 0160-2055 |
| A3A9A4C16 | 0160-0168 | 1 | 1 | CAPACITOR-FXD .1UF +-10% 200VDC POLYE | 28480 | 0160-0168 |
| A3A9A4C17 | 0160-2055 | 9 | | CAPACITOR-FXD .01UF +80-20% 100VDC CER | 28480 | 0160-2055 |
| A3A9A4C18 | 0160-2055 | 9 | | CAPACITOR-FXD .01UF +80-20% 100VDC CER | 28480 | 0160-2055 |
| A3A9A4C19 | 0160-0116 | 1 | | CAPACITOR-FXD 6.8UF+-10% 35VDC TA | 56289 | 150D685X9035B2 |
| A3A9A4C20 | 0160-0197 | 8 | | CAPACITOR-FXD 2.2UF+-10% 20VDC TA | 56289 | 150D225X9020A2 |

See introduction to this section for ordering information
*Indicates factory selected value
†Backdating information in Section VII



www.valuetronics.com

A3

Table 6-3. Replaceable Parts

| Reference Designation | HP Part Number | C D | Qty | Description | Mfr Code | Mfr Part Number |
|---|---|---|---|---|---|---|
| A3A9A4C21 | 0180-0197 | 8 | | CAPACITOR-FXD 2.2UF+-10% 20VDC TA | 56289 | 150D225X9020A2 |
| A3A9A4C22 | 0160-2055 | 9 | | CAPACITOR-FXD .01UF +80-20% 100VDC CER | 28480 | 0160-2055 |
| A3A9A4C23 | 0160-3874 | 2 | | CAPACITOR-FXD 10PF +-.5PF 200VDC CER | 28480 | 0160-3874 |
| A3A9A4C24 | 0160-0574 | 3 | | CAPACITOR-FXD .022UF +-20% 100VDC CER | 28480 | 0160-0574 |
| A3A9A4C25 | 0140-0190 | 7 | | CAPACITOR-FXD 39PF +-5% 300VDC MICA | 72136 | DM15E390J0300WV1CR |
| A3A9A4C26 | 0160-3490 | 8 | 1 | CAPACITOR-FXD 1UF +-20% 50VDC CER | 28480 | 0160-3490 |
| A3A9A4C27 | 0160-0574 | 3 | | CAPACITOR-FXD .022UF +-20% 100VDC CER | 28480 | 0160-0574 |
| A3A9A4C28 | 0160-4084 | 8 | | CAPACITOR-FXD .1UF +-20% 50VDC CER | 28480 | 0160-4084 |
| A3A9A4C29 | 0160-4084 | 8 | | CAPACITOR-FXD .1UF +-20% 50VDC CER | 28480 | 0160-4084 |
| A3A9A4C30 | 0160-2200 | 6 | 1 | CAPACITOR-FXD 43PF +-5% 300VDC MICA | 28480 | 0160-2200 |
| A3A9A4C31 | 0160-2264 | 2 | 1 | CAPACITOR-FXD 20PF +-5% 500VDC CER 0+-30 | 28480 | 0160-2264 |
| A3A9A4C32 | 0140-0194 | 1 | | CAPACITOR-FXD 110PF +-5% 300VDC MICA | 72136 | DM15F111J0300WV1CR |
| A3A9A4C33 | 0160-4084 | 8 | | CAPACITOR-FXD .1UF +-20% 50VDC CER | 28480 | 0160-4084 |
| A3A9A4CR1 | 1901-0040 | 1 | | DIODE-SWITCHING 30V 50MA 2NS DO-35 | 28480 | 1901-0040 |
| A3A9A4CR2 | 1901-0040 | 1 | | DIODE-SWITCHING 30V 50MA 2NS DO-35 | 28480 | 1901-0040 |
| A3A9A4CR3 | | | | NOT ASSIGNED | | |
| A3A9A4CR4 | | | | NOT ASSIGNED | | |
| A3A9A4CR5 | 1901-0050 | 3 | 3 | DIODE-SWITCHING 80V 200MA 2NS DO-35 | 28480 | 1901-0050 |
| A3A9A4CR6 | 1901-0040 | 1 | | DIODE-SWITCHING 30V 50MA 2NS DO-35 | 28480 | 1901-0040 |
| A3A9A4CR7 | 1901-0040 | 1 | | DIODE-SWITCHING 30V 50MA 2NS DO-35 | 28480 | 1901-0040 |
| A3A9A4CR8 | | | | NOT ASSIGNED | | |
| A3A9A4CR9 | | | | NOT ASSIGNED | | |
| A3A9A4CR10 | | | | NOT ASSIGNED | | |
| A3A9A4CR11 | 1901-0050 | 3 | | DIODE-SWITCHING 80V 200MA 2NS DO-35 | 28480 | 1901-0050 |
| A3A9A4CR12 | 1901-0040 | 1 | | DIODE-SWITCHING 30V 50MA 2NS DO-35 | 28480 | 1901-0040 |
| A3A9A4CR13 | 1901-0040 | 1 | | DIODE-SWITCHING 30V 50MA 2NS DO-35 | 28480 | 1901-0040 |
| A3A9A4CR14 | 1901-0040 | 1 | | DIODE-SWITCHING 30V 50MA 2NS DO-35 | 28480 | 1901-0040 |
| A3A9A4J1 | 1251-0600 | 0 | | CONNECTOR-SGL CONT PIN 1.14-MM-BSC-SZ SQ | 28480 | 1251-0600 |
| A3A9A4J2 | 1251-0600 | 0 | | CONNECTOR-SGL CONT PIN 1.14-MM-BSC-SZ SQ | 28480 | 1251-0600 |
| A3A9A4J3 | 1251-0600 | 0 | | CONNECTOR-SGL CONT PIN 1.14-MM-BSC-SZ SQ | 28480 | 1251-0600 |
| A3A9A4J4 | 1251-0600 | 0 | | CONNECTOR-SGL CONT PIN 1.14-MM-BSC-SZ SQ | 28480 | 1251-0600 |
| A3A9A4J5 | 1251-0600 | 0 | | CONNECTOR-SGL CONT PIN 1.14-MM-BSC-SZ SQ | 28480 | 1251-0600 |
| A3A9A4J6 | 1251-0600 | 0 | | CONNECTOR-SGL CONT PIN 1.14-MM-BSC-SZ SQ | 28480 | 1251-0600 |
| A3A9A4L1 | 9100-2254 | 3 | | INDUCTOR RF-CH-MLD 390NH 10% .105DX.26LG | 28480 | 9100-2254 |
| A3A9A4L2 | 9100-1620 | 5 | | INDUCTOR RF-CH-MLD 15UH 10% .166DX.385LG | 28480 | 9100-1620 |
| A3A9A4L3 | 9100-1620 | 5 | | INDUCTOR RF-CH-MLD 15UH 10% .166DX.385LG | 28480 | 9100-1620 |
| A3A9A4L4 | 9100-1641 | 0 | | INDUCTOR RF-CH-MLD 240UH 5% .166DX.385LG | 28480 | 9100-1641 |
| A3A9A4L5 | 9100-1620 | 5 | | INDUCTOR RF-CH-MLD 15UH 10% .166DX.385LG | 28480 | 9100-1620 |
| A3A9A4L6 | 9100-1641 | 0 | | INDUCTOR RF-CH-MLD 240UH 5% .166DX.385LG | 28480 | 9100-1641 |
| A3A9A4L7 | 9100-0368 | 6 | | INDUCTOR RF-CH-MLD 330NH 10% .105DX.26LG | 28480 | 9100-0368 |
| A3A9A4L8 | 9140-0179 | 1 | 2 | INDUCTOR RF-CH-MLD 22UH 10% .166DX.385LG | 28480 | 9140-0179 |
| A3A9A4L9 | 9100-2254 | 3 | | INDUCTOR RF-CH-MLD 390NH 10% .105DX.26LG | 28480 | 9100-2254 |
| A3A9A4L10 | 9100-0368 | 6 | | INDUCTOR RF-CH-MLD 330NH 10% .105DX.26LG | 28480 | 9100-0368 |
| A3A9A4L11 | 9140-0179 | 1 | | INDUCTOR RF-CH-MLD 22UH 10% .166DX.385LG | 28480 | 9140-0179 |
| A3A9A4MP1 | 3050-0079 | 3 | | WASHER-FL NM NO. 2 .094-IN-ID .188-IN-OD | 28480 | 3050-0079 |
| A3A9A4Q1 | 1854-0404 | 0 | | TRANSISTOR NPN SI TO-18 PD=360MW | 28480 | 1854-0404 |
| A3A9A4Q2 | 1853-0451 | 5 | | TRANSISTOR PNP 2N3799 SI TO-18 PD=360MW | 01295 | 2N3799 |
| A3A9A4Q3 | 1855-0395 | 0 | 1 | TRANSISTOR J-FET N-CHAN D-MODE TO-52 SI | 17856 | FN2845 |
| A3A9A4Q4 | 1854-0712 | 3 | | TRANSISTOR-DUAL NPN PD=1.8W | 28480 | 1854-0712 |
| A3A9A4Q5 | 1854-0404 | 0 | | TRANSISTOR NPN SI TO-18 PD=360MW | 28480 | 1854-0404 |
| A3A9A4R1 | 0698-7288 | 9 | 1 | RESISTOR 147K 1% .05W F TC=0+-100 | 24546 | C3-1/8-TO-1473-F |
| A3A9A4R2 | 0757-0464 | 5 | 1 | RESISTOR 90.9K 1% .125W F TC=0+-100 | 24546 | C4-1/8-TO-9092-F |
| A3A9A4R3 | 0757-0442 | 9 | | RESISTOR 10K 1% .125W F TC=0+-100 | 24546 | C4-1/8-TO-1002-F |
| A3A9A4R4 | 0698-0083 | 8 | | RESISTOR 1.96K 1% .125W F TC=0+-100 | 24546 | C4-1/8-TO-1961-F |
| A3A9A4R5 | 0757-0416 | 7 | | RESISTOR 511 1% .125W F TC=0+-100 | 24546 | C4-1/8-TO-511R-F |
| A3A9A4R6 | 0698-7212 | 9 | | RESISTOR 100 1% .05W F TC=0+-100 | 24546 | C3-1/8-TO-100R-F |
| A3A9A4R7 | 0698-7219 | 6 | | RESISTOR 196 1% .05W F TC=0+-100 | 24546 | C3-1/8-TO-196R-F |
| A3A9A4R8 | 0698-7212 | 9 | | RESISTOR 100 1% .05W F TC=0+-100 | 24546 | C3-1/8-TO-100R-F |
| A3A9A4R9 | 0698-7219 | 6 | | RESISTOR 196 1% .05W F TC=0+-100 | 24546 | C3-1/8-TO-196R-F |
| A3A9A4R10 | 0698-3429 | 2 | | RESISTOR 19.6 1% .125W F TC=0+-100 | 03888 | PME55-1/8-T0-19R6-F |
| A3A9A4R11 | 0698-3429 | 2 | | RESISTOR 19.6 1% .125W F TC=0+-100 | 03888 | PME55-1/8-T0-19R6-F |
| A3A9A4R12 | 0698-3440 | 7 | | RESISTOR 196 1% .125W F TC=0+-100 | 24546 | C4-1/8-T0-196R-F |
| A3A9A4R13 | 0698-3440 | 7 | | RESISTOR 196 1% .125W F TC=0+-100 | 24546 | C4-1/8-T0-196R-F |
| A3A9A4R14 | 0757-0458 | 7 | | RESISTOR 51.1K 1% .125W F TC=0+-100 | 24546 | C4-1/8-T0-5112-F |
| A3A9A4R15 | 0698-3155 | 1 | | RESISTOR 4.64K 1% .125W F TC=0+-100 | 24546 | C4-1/8-T0-4641-F |

See introduction to this section for ordering information
*Indicates factory selected value
†Backdating information in Section VII



www.valuetronics.com

Table 6-3. Replaceable Parts

| Reference Designation | HP Part Number | C D | Qty | Description | Mfr Code | Mfr Part Number |
|---|---|---|---|---|---|---|
| A3A9A4R16 | 0757-0280 | 3 | | RESISTOR 1K 1% .125W F TC=0+-100 | 24546 | C4-1/8-T0-1001-F |
| A3A9A4R17 | 0757-0280 | 3 | | RESISTOR 1K 1% .125W F TC=0+-100 | 24546 | C4-1/8-T0-1001-F |
| A3A9A4R18 | 0757-0438 | 3 | | RESISTOR 5.11K 1% .125W F TC=0+-100 | 24546 | C4-1/8-T0-5111-F |
| A3A9A4R19 | 0757-0438 | 3 | | RESISTOR 5.11K 1% .125W F TC=0+-100 | 24546 | C4-1/8-T0-5111-F |
| A3A9A4R20* | 0757-0421 | 4 | 8 | RESISTOR 825 1% .125W F TC=0+-100 | 24546 | C4-1/8-T0-825R-F |
| A3A9A4R21 | 0757-1094 | 9 | | RESISTOR 1.47K 1% .125W F TC=0+-100 | 24546 | C4-1/8-T0-1471-F |
| A3A9A4R22 | 0698-3152 | 8 | | RESISTOR 3.48K 1% .125W F TC=0+-100 | 24546 | C4-1/8-T0-3481-F |
| A3A9A4R23 | | | | NOT ASSIGNED | | |
| A3A9A4R24 | 0698-3157 | 3 | | RESISTOR 19.6K 1% .125W F TC=0+-100 | 24546 | C4-1/8-T0-1962-F |
| A3A9A4R25 | 0757-0416 | 7 | | RESISTOR 511 1% .125W F TC=0+-100 | 24546 | C4-1/8-T0-511R-F |
| A3A9A4R26 | 0698-4020 | 1 | 1 | RESISTOR 9.53K 1% .125W F TC=0+-100 | 24546 | C4-1/8-T0-9531-F |
| A3A9A4R27 | 0698-0085 | 0 | | RESISTOR 2.61K 1% .125W F TC=0+-100 | 24546 | C4-1/8-T0-2611-F |
| A3A9A4R28 | 0757-0438 | 3 | | RESISTOR 5.11K 1% .125W F TC=0+-100 | 24546 | C4-1/8-T0-5111-F |
| A3A9A4R29 | 0757-0394 | 0 | | RESISTOR 51.1 1% .125W F TC=0+-100 | 24546 | C4-1/8-T0-51R1-F |
| A3A9A4R30 | 2100-3212 | 8 | 1 | RESISTOR-TRMR 200 10% C TOP-ADJ 1-TRN | 28480 | 2100-3212 |
| A3A9A4R31 | 0757-0416 | 7 | | RESISTOR 511 1% .125W F TC=0+-100 | 24546 | C4-1/8-T0-511R-F |
| A3A9A4R32 | 0757-0440 | 7 | | RESISTOR 7.5K 1% .125W F TC=0+-100 | 24546 | C4-1/8-T0-7501-F |
| A3A9A4R33 | 0757-0442 | 9 | | RESISTOR 10K 1% .125W F TC=0+-100 | 24546 | C4-1/8-T0-1002-F |
| A3A9A4R34 | 0757-0442 | 9 | | RESISTOR 10K 1% .125W F TC=0+-100 | 24546 | C4-1/8-T0-1002-F |
| A3A9A4R35 | 0757-0421 | 4 | | RESISTOR 825 1% .125W F TC=0+-100 | 24546 | C4-1/8-T0-825R-F |
| A3A9A4R36 | 0757-0438 | 3 | | RESISTOR 5.11K 1% .125W F TC=0+-100 | 24546 | C4-1/8-T0-5111-F |
| A3A9A4R37 | 0757-0422 | 5 | | RESISTOR 909 1% .125W F TC=0+-100 | 24546 | C4-1/8-T0-909R-F |
| A3A9A4R38 | 0757-0422 | 5 | | RESISTOR 909 1% .125W F TC=0+-100 | 24546 | C4-1/8-T0-909R-F |
| A3A9A4R39 | 0757-0467 | 8 | | RESISTOR 121K 1% .125W F TC=0+-100 | 24546 | C4-1/8-T0-1213-F |
| A3A9A4R40 | | | | NOT ASSIGNED | | |
| A3A9A4R41 | | | | NOT ASSIGNED | | |
| A3A9A4R42 | | | | NOT ASSIGNED | | |
| A3A9A4R43 | 0757-0458 | 7 | | RESISTOR 51.1K 1% .125W F TC=0+-100 | 24546 | C4-1/8-T0-5112-F |
| A3A9A4R44 | 0757-0442 | 9 | | RESISTOR 10K 1% .125W F TC=0+-100 | 24546 | C4-1/8-T0-1002-F |
| A3A9A4R45 | 0698-3132 | 4 | | RESISTOR 261 1% .125W F TC=0+-100 | 24546 | C4-1/8-T0-2610-F |
| A3A9A4R46 | 0698-3132 | 4 | | RESISTOR 261 1% .125W F TC=0+-100 | 24546 | C4-1/8-T0-2610-F |
| A3A9A4R47 | 0757-0416 | 7 | | RESISTOR 511 1% .125W F TC=0+-100 | 24546 | C4-1/8-T0-511R-F |
| A3A9A4R48 | 0698-7236 | 7 | | RESISTOR 1K 1% .05W F TC=0+-100 | 24546 | C3-1/8-T0-1001-F |
| A3A9A4R49 | 0757-0439 | 4 | | RESISTOR 6.81K 1% .125W F TC=0+-100 | 24546 | C4-1/8-T0-6811-F |
| A3A9A4R50 | 0698-0085 | 0 | | RESISTOR 2.61K 1% .125W F TC=0+-100 | 24546 | C4-1/8-T0-2611-F |
| A3A9A4R51 | 0698-0083 | 8 | | RESISTOR 1.96K 1% .125W F TC=0+-100 | 24546 | C4-1/8-T0-1961-F |
| A3A9A4R52 | 0698-0083 | 8 | | RESISTOR 1.96K 1% .125W F TC=0+-100 | 24546 | C4-1/8-T0-1961-F |
| A3A9A4R53 | 2100-3211 | 7 | 1 | RESISTOR-TRMR 1K 10% C TOP-ADJ 1-TRN | 28480 | 2100-3211 |
| A3A9A4R54 | 0698-7245 | 8 | 1 | RESISTOR 2.37K 1% .05W F TC=0+-100 | 24546 | C3-1/8-T0-2371-F |
| A3A9A4R55 | 0698-7242 | 5 | 1 | RESISTOR 1.78K 1% .05W F TC=0+-100 | 24546 | C3-1/8-T0-1781-F |
| A3A9A4R56 | 0698-7253 | 8 | 1 | RESISTOR 5.11K 1% .05W F TC=0+-100 | 24546 | C3-1/8-T0-5111-F |
| A3A9A4R57 | 0757-0418 | 9 | | RESISTOR 619 1% .125W F TC=0+-100 | 24546 | C4-1/8-T0-619R-F |
| A3A9A4R58 | 0698-3451 | 0 | 1 | RESISTOR 133K 1% .125W F TC=0+-100 | 24546 | C4-1/8-T0-1333-F |
| A3A9A4U1 | 1826-0092 | 3 | | IC OP AMP GP DUAL TO-99 PKG | 28480 | 1826-0092 |
| A3A9A4U2 | 1826-0026 | 3 | 1 | IC COMPARATOR PRCN TO-99 PKG | 01295 | LM311L |
| A3A9A4U3 | 1826-0044 | 5 | | IC OP AMP GP DUAL 14-DIP-C PKG | 07263 | UA739DC |
| A3A9A4U4 | 1820-1423 | 4 | 1 | IC MV TTL LS MONOSTBL RETRIG DUAL | 01295 | SN74LS123N |
| A3A9A4U5 | 1820-1344 | 8 | | IC PL LOOP 14-DIP-C PKG | 04713 | MC12040L |
| A3A9A4U6 | 1820-0802 | 1 | | IC GATE ECL NOR QUAD 2-INP | 04713 | MC10102P |
| A3A9A4U7 | 1820-0817 | 8 | 2 | IC FF ECL D-M/S DUAL | 04713 | MC10131P |
| A3A9A4U8 | 1810-0204 | 6 | | NETWORK-RES 8-SIP1.0K OHM X 7 | 01121 | 208A102 |
| A3A9A4U9 | 1820-0817 | 8 | | IC FF ECL D-M/S DUAL | 04713 | MC10131P |
| A3A9A4VR1 | 1902-1260 | 1 | 2 | DIODE-ZNR 1N5525C 6.2V 2% DO-7 PD=.4W | 04713 | 1N5525C |
| A3A9A4VR2 | 1902-1260 | 1 | | DIODE-ZNR 1N5525C 6.2V 2% DO-7 PD=.4W | 04713 | 1N5525C |
| A3A9A4VR3 | 1902-0041 | 4 | 1 | DIODE-ZNR 5.11V 5% DO-35 PD=.4W | 28480 | 1902-0041 |
| A3A9A4VR4 | 1902-3104 | 6 | 1 | DIODE-ZNR 5.62V 5% DO-35 PD=.4W | 28480 | 1902-3104 |
| A3A9A5 | 86701-60089 | 5 | 1 | SAMPLER ASSEMBLY (DOES NOT INCLUDE A3A9U1 SAMPLER) | 28480 | 86701-60089 |
| A3A9A5C1 | 0121-0048 | 2 | 2 | CAPACITOR-V TRMR-CER 9-35PF 200V PC-MTG | 52763 | 304322 9/35PF N650 |
| A3A9A5C2 | 0121-0048 | 2 | | CAPACITOR-V TRMR-CER 9-35PF 200V PC-MTG | 52763 | 304322 9/35PF N650 |
| A3A9A5C3 | 0180-0197 | 8 | | CAPACITOR-FXD 2.2UF+-10% 20VDC TA | 56289 | 150D225X9020A2 |
| A3A9A5C4 | 0180-0116 | 1 | | CAPACITOR-FXD 6.8UF+-10% 35VDC TA | 56289 | 150D685X9035B2 |
| A3A9A5C5 | 0160-2055 | 9 | | CAPACITOR-FXD .01UF +80-20% 100VDC CER | 28480 | 0160-2055 |

A3

See introduction to this section for ordering information
*Indicates factory selected value
†Backdating information in Section VII



www.valuetronics.com

A3

Table 6-3. Replaceable Parts

| Reference Designation | HP Part Number | C D | Qty | Description | Mfr Code | Mfr Part Number |
|---|---|---|---|---|---|---|
| A3A9A5C6 | 0160-2150 | 5 | 1 | CAPACITOR-FXD 33PF +-5% 300VDC MICA | 28480 | 0160-2150 |
| A3A9A5C7 | 0160-2055 | 9 | | CAPACITOR-FXD .01UF +80-20% 100VDC CER | 28480 | 0160-2055 |
| A3A9A5C8 | 0160-3878 | 6 | | CAPACITOR-FXD 1000PF +-20% 100VDC CER | 28480 | 0160-3878 |
| A3A9A5C9 | 0180-0197 | 8 | | CAPACITOR-FXD 2.2UF+-10% 20VDC TA | 56289 | 150D225X9020A2 |
| A3A9A5C10 | 0160-2265 | 3 | 1 | CAPACITOR-FXD 22PF +-5% 500VDC CER 0+-30 | 28480 | 0160-2265 |
| A3A9A5C11 | 0160-3878 | 6 | | CAPACITOR-FXD 1000PF +-20% 100VDC CER | 28480 | 0160-3878 |
| A3A9A5C12 | 0160-2055 | 9 | | CAPACITOR-FXD .01UF +80-20% 100VDC CER | 28480 | 0160-2055 |
| A3A9A5C13 | 0180-0228 | 6 | | CAPACITOR-FXD 22UF+-10% 15VDC TA | 56289 | 150D226X9015B2 |
| A3A9A5C14 | 0160-2055 | 9 | | CAPACITOR-FXD .01UF +80-20% 100VDC CER | 28480 | 0160-2055 |
| A3A9A5C15 | 0160-2055 | 9 | | CAPACITOR-FXD .01UF +80-20% 100VDC CER | 28480 | 0160-2055 |
| A3A9A5C16 | 0160-3879 | 7 | | CAPACITOR-FXD .01UF +-20% 100VDC CER | 28480 | 0160-3879 |
| A3A9A5C17 | 0160-2055 | 9 | | CAPACITOR-FXD .01UF +80-20% 100VDC CER | 28480 | 0160-2055 |
| A3A9A5C18 | 0160-3878 | 6 | | CAPACITOR-FXD 1000PF +-20% 100VDC CER | 28480 | 0160-3878 |
| A3A9A5C19 | 0160-3879 | 7 | | CAPACITOR-FXD .01UF +-20% 100VDC CER | 28480 | 0160-3879 |
| A3A9A5C20 | 0160-0939 | 4 | 1 | CAPACITOR-FXD 430PF +-5% 300VDC MICA | 28480 | 0160-0939 |
| A3A9A5C21 | 0160-2055 | 9 | | CAPACITOR-FXD .01UF +80-20% 100VDC CER | 28480 | 0160-2055 |
| A3A9A5C22* | 0140-0196 | 3 | 2 | CAPACITOR-FXD 150PF +-5% 300VDC MICA | 72136 | DM15F151J0300WV1CR |
| A3A9A5C23 | 0160-2055 | 9 | | CAPACITOR-FXD .01UF +80-20% 100VDC CER | 28480 | 0160-2055 |
| A3A9A5C24 | 0140-0193 | 0 | | CAPACITOR-FXD 82PF +-5% 300VDC MICA | 72136 | DM15E820J0300WV1CR |
| A3A9A5C25 | 0140-0193 | 0 | | CAPACITOR-FXD 82PF +-5% 300VDC MICA | 72136 | DM15E820J0300WV1CR |
| A3A9A5C26 | 0160-2308 | 5 | 1 | CAPACITOR-FXD 36PF +-5% 300VDC MICA | 28480 | 0160-2308 |
| A3A9A5C27 | 0160-2055 | 9 | | CAPACITOR-FXD .01UF +80-20% 100VDC CER | 28480 | 0160-2055 |
| A3A9A5C28 | 0160-2055 | 9 | | CAPACITOR-FXD .01UF +80-20% 100VDC CER | 28480 | 0160-2055 |
| A3A9A5C29 | 0160-3879 | 7 | | CAPACITOR-FXD .01UF +-20% 100VDC CER | 28480 | 0160-3879 |
| A3A9A5C30 | 0160-3879 | 7 | | CAPACITOR-FXD .01UF +-20% 100VDC CER | 28480 | 0160-3879 |
| A3A9A5C31 | 0160-2055 | 9 | | CAPACITOR-FXD .01UF +80-20% 100VDC CER | 28480 | 0160-2055 |
| A3A9A5C32 | 0160-3879 | 7 | | CAPACITOR-FXD .01UF +-20% 100VDC CER | 28480 | 0160-3879 |
| A3A9A5J1 | 1251-3172 | 7 | 3 | CONNECTOR-SGL CONT SKT .03-IN-BSC-SZ RND | 28480 | 1251-3172 |
| A3A9A5J2 | 1251-0600 | 0 | 1 | CONNECTOR-SGL CONT PIN 1.14-MM-BSC-SZ SQ | 28480 | 1251-0600 |
| A3A9A5L1 | | | | NSR, PART OF CIRCUIT BOARD | | |
| A3A9A5L2 | 9140-0144 | 0 | 1 | INDUCTOR RF-CH-MLD 4.7UH 10% .105DX.26LG | 28480 | 9140-0144 |
| A3A9A5L3 | 9100-1623 | 8 | 1 | INDUCTOR RF-CH-MLD 27UH 5% .166DX.385LG | 28480 | 9100-1623 |
| A3A9A5L4 | 9100-2251 | 0 | | INDUCTOR RF-CH-MLD 220NH 10% .105DX.26LG | 28480 | 9100-2251 |
| A3A9A5L5 | 9100-2258 | 7 | 2 | INDUCTOR RF-CH-MLD 1.2UH 10% .105DX.26LG | 28480 | 9100-2258 |
| A3A9A5L6 | 9100-2258 | 7 | | INDUCTOR RF-CH-MLD 1.2UH 10% .105DX.26LG | 28480 | 9100-2258 |
| A3A9A5L7 | 9140-0770 | 8 | | INDUCTOR RF-CH-MLD 50NH 10% 105DX.26LG | 28480 | 9140-0770 |
| A3A9A5L8 | | | | NSR, PART OF CIRCUIT BOARD | | |
| A3A9A5L9 | | | | NSR, PART OF CIRCUIT BOARD | | |
| A3A9A5L10 | 9140-0539 | 7 | 1 | INDUCTOR RF-CH-MLD 3UH 5% .105DX.26LG | 28480 | 9140-0539 |
| A3A9A5L11 | 9100-0368 | 6 | | INDUCTOR RF-CH-MLD 330NH 10% .105DX.26LG | 28480 | 9100-0368 |
| A3A9A5L12 | 9100-2249 | 6 | | INDUCTOR RF-CH-MLD 150NH 10% .105DX.26LG | 28480 | 9100-2249 |
| A3A9A5L13 | 9100-2250 | 9 | 1 | INDUCTOR RF-CH-MLD 180NH 10% .105DX.26LG | 28480 | 9100-2250 |
| A3A9A5L14 | 9100-2249 | 6 | | INDUCTOR RF-CH-MLD 150NH 10% .105DX.26LG | 28480 | 9100-2249 |
| A3A9A5MP1 | 1205-0011 | 0 | | HEAT SINK TO-5/TO-39-CS | 28480 | 1205-0011 |
| A3A9A5MP2 | 1205-0037 | 0 | | HEAT SINK TO-18-CS | 28480 | 1205-0037 |
| A3A9A5MP3 | | | | NOT ASSIGNED | | |
| A3A9A5MP4 | 1200-0173 | 5 | | INSULATOR-XSTR DAP-GL | 28480 | 1200-0173 |
| A3A9A5Q1 | 1854-0247 | 9 | | TRANSISTOR NPN SI TO-39 PD=1W FT=800MHZ | 28480 | 1854-0247 |
| A3A9A5Q2 | 1854-0345 | 8 | | TRANSISTOR NPN 2N5179 SI TO-72 PD=200MW | 04713 | 2N5179 |
| A3A9A5Q3 | 1854-0247 | 9 | | TRANSISTOR NPN SI TO-39 PD=1W FT=800MHZ | 28480 | 1854-0247 |
| A3A9A5Q4 | 1855-0235 | 7 | 1 | TRANSISTOR J-FET N-CHAN D-MODE TO-52 SI | 28480 | 1855-0235 |
| A3A9A5Q5 | 1853-0015 | 7 | | TRANSISTOR PNP SI PD=200MW FT=500MHZ | 28480 | 1853-0015 |
| A3A9A5Q6 | 1854-0345 | 8 | | TRANSISTOR NPN 2N5179 SI TO-72 PD=200MW | 04713 | 2N5179 |
| A3A9A5Q7 | 1854-0345 | 8 | | TRANSISTOR NPN 2N5179 SI TO-72 PD=200MW | 04713 | 2N5179 |
| A3A9A5Q8 | 1854-0247 | 9 | | TRANSISTOR NPN SI TO-39 PD=1W FT=800MHZ | 28480 | 1854-0247 |
| A3A9A5R1 | 2100-3383 | 4 | 1 | RESISTOR-TRMR 50 10% C TOP-ADJ 1-TRN | 28480 | 2100-3383 |
| A3A9A5R2 | 0757-0394 | 0 | | RESISTOR 51.1 1% .125W F TC=0+-100 | 24546 | C4-1/8-TO-51R1-F |
| A3A9A5R3 | 0698-3440 | 7 | | RESISTOR 196 1% .125W F TC=0+-100 | 24546 | C4-1/8-TO-196R-F |
| A3A9A5R4 | 0698-0085 | 0 | | RESISTOR 2.61K 1% .125W F TC=0+-100 | 24546 | C4-1/8-TO-2611-F |
| A3A9A5R5 | 0757-0424 | 7 | | RESISTOR 1.1K 1% .125W F TC=0+-100 | 24546 | C4-1/8-TO-1101-F |
| A3A9A5R6 | 0757-0280 | 3 | | RESISTOR 1K 1% .125W F TC=0+-100 | 24546 | C4-1/8-TO-1001-F |
| A3A9A5R7 | 0757-0278 | 9 | | RESISTOR 1.78K 1% .125W F TC=0+-100 | 24546 | C4-1/8-TO-1781-F |
| A3A9A5R8 | 0757-0796 | 6 | 1 | RESISTOR 82.5 1% .5W F TC=0+-100 | 28480 | 0757-0796 |
| A3A9A5R9 | 0757-0399 | 5 | | RESISTOR 82.5 1% .125W F TC=0+-100 | 24546 | C4-1/8-TO-82R5-F |
| A3A9A5R10 | 0698-3457 | 6 | 1 | RESISTOR 316K 1% .125W F TC=0+-100 | 28480 | 0698-3457 |

See introduction to this section for ordering information
*Indicates factory selected value
†Backdating information in Section VII



www.valuetronics.com

Table 6-3. Replaceable Parts

| Reference Designation | HP Part Number | CD | Qty | Description | Mfr Code | Mfr Part Number |
|---|---|---|---|---|---|---|
| A3A9A5R11 | 0757-0470 | 3 | 1 | RESISTOR 162K 1% .125W F TC=0+-100 | 24546 | C4-1/8-T0-1623-F |
| A3A9A5R12 | | | | NOT ASSIGNED | | |
| A3A9A5R13 | 0698-7216 | 3 | 1 | RESISTOR 147 1% .05W F TC=0+-100 | 24546 | C3-1/8-T0-147R-F |
| A3A9A5R14 | | | | NOT ASSIGNED | | |
| A3A9A5R15 | 0757-0424 | 7 | | RESISTOR 1.1K 1% .125W F TC=0+-100 | 24546 | C4-1/8-T0-1101-F |
| A3A9A5R16 | 0757-0398 | 4 | 1 | RESISTOR 75 1% .125W F TC=0+-100 | 24546 | C4-1/8-T0-75R0-F |
| A3A9A5R17 | 0757-0424 | 7 | | RESISTOR 1.1K 1% .125W F TC=0+-100 | 24546 | C4-1/8-T0-1101-F |
| A3A9A5R18 | 0757-0419 | 0 | | RESISTOR 681 1% .125W F TC=0+-100 | 24546 | C4-1/8-T0-681R-F |
| A3A9A5R19 | 0757-0421 | 4 | | RESISTOR 825 1% .125W F TC=0+-100 | 24546 | C4-1/8-T0-825R-F |
| A3A9A5R20 | 0698-7224 | 3 | | RESISTOR 316 1% .05W F TC=0+-100 | 24546 | C3-1/8-T0-316R-F |
| A3A9A5R21 | 0698-7212 | 9 | | RESISTOR 100 1% .05W F TC=0+-100 | 24546 | C3-1/8-T0-100R-F |
| A3A9A5R22 | 0698-7196 | 7 | 1 | RESISTOR 19.6 1% .05W F TC=0+-100 | 24546 | C3-1/8-T0-19R6-F |
| A3A9A5R23 | 0698-0083 | 8 | | RESISTOR 1.96K 1% .125W F TC=0+-100 | 24546 | C4-1/8-T0-1961-F |
| A3A9A5R24 | 0698-0084 | 9 | | RESISTOR 2.15K 1% .125W F TC=0+-100 | 24546 | C4-1/8-T0-2151-F |
| A3A9A5R25 | 0698-0082 | 7 | 2 | RESISTOR 464 1% .125W F TC=0+-100 | 24546 | C4-1/8-T0-4640-F |
| A3A9A5R26 | 0757-0280 | 3 | | RESISTOR 1K 1% .125W F TC=0+-100 | 24546 | C4-1/8-T0-1001-F |
| A3A9A5R27 | 0757-0394 | 0 | | RESISTOR 51.1 1% .125W F TC=0+-100 | 24546 | C4-1/8-T0-51R1-F |
| A3A9A5R28 | 0698-0082 | 7 | | RESISTOR 464 1% .125W F TC=0+-100 | 24546 | C4-1/8-T0-4640-F |
| A3A9A5R29 | 0698-7212 | 9 | | RESISTOR 100 1% .05W F TC=0+-100 | 24546 | C3-1/8-T0-100R-F |
| A3A9A5R30 | 0757-0346 | 2 | | RESISTOR 10 1% .125W F TC=0+-100 | 24546 | C4-1/8-T0-10R0-F |
| A3A9A5R31 | 0757-0420 | 3 | | RESISTOR 750 1% .125W F TC=0+-100 | 24546 | C4-1/8-T0-751-F |
| A3A9A5R32 | 0698-3439 | 4 | 2 | RESISTOR 178 1% .125W F TC=0+-100 | 24546 | C4-1/8-T0-178R-F |
| A3A9A5R33 | 0757-0346 | 2 | | RESISTOR 10 1% .125W F TC=0+-100 | 24546 | C4-1/8-T0-10R0-F |
| A3A9A5R34 | 0757-0280 | 3 | | RESISTOR 1K 1% .125W F TC=0+-100 | 24546 | C4-1/8-T0-1001-F |
| A3A9A5R35 | 0698-3439 | 4 | | RESISTOR 178 1% .125W F TC=0+-100 | 24546 | C4-1/8-T0-178R-F |
| A3A9A5R36 | 0757-0394 | 0 | | RESISTOR 51.1 1% .125W F TC=0+-100 | 24546 | C4-1/8-T0-51R1-F |
| A3A9A5R37 | 0757-0394 | 0 | | RESISTOR 51.1 1% .125W F TC=0+-100 | 24546 | C4-1/8-T0-51R1-F |
| A3A9A5R38 | 0757-0276 | 7 | | RESISTOR 61.9 1% .125W F TC=0+-100 | 24546 | C4-1/8-T0-6192-F |
| A3A9A5R39 | 0757-0276 | 7 | | RESISTOR 61.9 1% .125W F TC=0+-100 | 24546 | C4-1/8-T0-6192-F |
| A3A9A5R40 | 0757-0394 | 0 | | RESISTOR 51.1 1% .125W F TC=0+-100 | 24546 | C4-1/8-T0-51R1-F |
| A3A9A5R41 | 0698-7196 | 8 | 1 | RESISTOR 21.5 1% .05W F TC=0+-100 | 24546 | C3-1/8-T0-21R5-F |
| A3A9A5TP1 | 1251-0600 | 0 | | CONNECTOR-SGL CONT PIN 1.14-MM-BSC-SZ SQ | 28480 | 1251-0600 |
| A3A9A6 | 0955-0090 | 3 | 2 | ATTENUATOR ASSEMBLY- 15DB | 28480 | 0955-0090 |
| A3A9A7 | 9135-0111 | 0 | 1 | 6.2 GHZ LOW PASS FILTER ASSEMBLY | 28480 | 9135-0111 |
| A3A10 | 08673-60047 | 6 | 1 | MOTHERBOARD ASSEMBLY | 28480 | 08673-60047 |
| A3A10C1-A3A10C7 | | | | NOT ASSIGNED | | |
| A3A10CR1 | 1901-0159 | 3 | 1 | DIODE-PWR RECT 400V 750MA DO-41 | 28480 | 1901-0159 |
| A3A10CR2 | 1901-0050 | 3 | | DIODE-SWITCHING 80V 200MA 2NS DO-35 | 28480 | 1901-0050 |
| A3A10CR3 | 1990-0517 | 4 | 1 | LED-LAMP LUM-INT=3MCD IF=20MA-MAX BVR=5V | 28480 | 5082-4855 |
| A3A10J1 | 1200-0812 | 9 | 1 | SOCKET-IC 16-CONT DIP DIP-SLDR | 28480 | 1200-0812 |
| A3A10J2 | 1251-3905 | 4 | 1 | CONNECTOR 20-PIN M RECTANGULAR | 28480 | 1251-3905 |
| A3A10J3 | 86701-60069 | 1 | 1 | CONNECTOR ASSEMBLY, 6-PIN | 28480 | 86701-60069 |
| A3A10J4 | 1251-0555 | 4 | 1 | CONNECTOR-PC EDGE 30-CONT/ROW 2-ROWS | 28480 | 1251-0555 |
| A3A10K1 | 0490-0618 | 5 | 1 | RELAY 2C 24VDC-COIL 5A 115VAC | 28480 | 0490-0618 |
| A3A10MP1 | 0380-0076 | 6 | 2 | SPACER-RVT-ON .5-IN-LG .152-IN-ID | 00000 | ORDER BY DESCRIPTION |
| A3A10MP2 | 0380-0076 | 6 | | SPACER-RVT-ON .5-IN-LG .152-IN-ID | 00000 | ORDER BY DESCRIPTION |
| A3A10MP3 | 0380-0659 | 1 | 1 | SPACER-RVT-ON .375-IN-LG .152-IN-ID | 00000 | ORDER BY DESCRIPTION |
| A3A10MP4 | 0380-0884 | 4 | 1 | STANDOFF-RVT-ON .156-IN-LG 4-40THD | 00000 | ORDER BY DESCRIPTION |
| A3A10MP5 | 0590-0343 | 5 | 1 | THREADED INSERT-NUT 4-40 .062-IN-LG | 28480 | 0590-0343 |
| A3A10MP6 | 0380-0677 | 3 | 1 | SPACER-RVT-ON .156-IN-LG .152-IN-ID | 00000 | ORDER BY DESCRIPTION |
| A3A10MP7 | 1400-0249 | 0 | 10 | CABLE TIE .062-.625-DIA .091-WD NYL | 06383 | PLT1M-8 |
| A3A10MP8 | 1400-0619 | 8 | 1 | CABLE CLAMP-NFCL .312-DIA .5-WD | 28480 | 1400-0619 |
| A3A10MP9 | 2190-0012 | 9 | 1 | WASHER-LK EXT T NO. 10 .195-IN-ID | 28480 | 2190-0012 |
| A3A10MP10 | 2200-0141 | 8 | 4 | SCREW-MACH 4-40 .312-IN-LG PAN-HD-POZI | 28480 | 2200-0141 |
| A3A10MP11 | 3050-0105 | 8 | | WASHER-FL MTLC NO. 4 .125-IN-ID | 28480 | 3050-0105 |
| A3A10R1 | | | | NOT ASSIGNED | | |
| A3A10R2 | 0687-3321 | 0 | 1 | RESISTOR 3.3K 10% .5W CC TC=0+647 | 01121 | EB3321 |
| A3A10R3 | 0683-7515 | 4 | 1 | RESISTOR 750 5% .25W FC TC=-400/+600 | 01121 | CB7515 |
| A3A10R4 | 0686-7525 | 2 | 1 | RESISTOR 7.5K 5% .5W CC TC=0+647 | 01121 | EB7525 |
| A3A10R5 | 0683-2225 | 3 | 1 | RESISTOR 2.2K 5% .25W FC TC=-400/+700 | 01121 | CB2225 |

See introduction to this section for ordering information
*Indicates factory selected value
†Backdating information in Section VII



www.valuetronics.com

A3

Table 6-3. Replaceable Parts

| Reference Designation | HP Part Number | C D | Qty | Description | Mfr Code | Mfr Part Number |
|---|---|---|---|---|---|---|
| A3A10R6 | 0811-1669 | 0 | 1 | RESISTOR 1.8 5% 2W PW TC=0+-400 | 75042 | BWH2-1R8-J |
| A3A10XA3A2 | 1251-2026 | 8 | 4 | CONNECTOR-PC EDGE 18-CONT/ROW 2-ROWS | 28480 | 1251-2026 |
| A3A10XA3A3 | 1251-2026 | 8 | | CONNECTOR-PC EDGE 18-CONT/ROW 2-ROWS | 28480 | 1251-2026 |
| A3A10XA3A4 | 1251-2026 | 8 | | CONNECTOR-PC EDGE 18-CONT/ROW 2-ROWS | 28480 | 1251-2026 |
| A3A10XA3A5 | 1251-2026 | 8 | | CONNECTOR-PC EDGE 18-CONT/ROW 2-ROWS | 28480 | 1251-2026 |
| A3A10XA3A6 | 1251-2035 | 9 | | CONNECTOR-PC EDGE 15-CONT/ROW 2-ROWS | 28480 | 1251-2035 |
| A3A10XA3A7 | 1251-2035 | 9 | | CONNECTOR-PC EDGE 15-CONT/ROW 2-ROWS | 28480 | 1251-2035 |
| A3A11 | 0960-0443 | 1 | 1 | LINE MODULE-FILTERED | 28480 | 0960-0443 |
| A3AT1 | 86701-60066 | 8 | 2 | TERMINATION- 50 OHM | 28480 | 86701-60066 |
| A3AT2 | 86701-60066 | 8 | | TERMINATION- 50 OHM | 28480 | 86701-60066 |
| A3AT3 | 0955-0090 | 3 | | ATTEN, COAXIAL | 28480 | 0955-0090 |
| A3AT4 | 0955-0098 | 1 | | COUPLER, 2-8.4GHZ | 28480 | 0955-0098 |
| A3B1 | 3160-0296 | 9 | 1 | FAN-SKL 72-CFM 115V 50/60-HZ 3.875-OD (EXCEPT OPTION 003) | 28480 | 3160-0296 |
| A3B1 | 3160-0298 | 1 | 1 | FAN-SKL 72-CFM 115V 50/60/400-HZ (OPTION 003 ONLY) | 28480 | 3160-0298 |
| A3C1 | 0180-0452 | 8 | 1 | CAPACITOR-FXD .013F+75-10% 25VDC AL | 28480 | 0180-0452 |
| A3C2 | 0180-0454 | 0 | 1 | CAPACITOR-FXD 4200UF+75-10% 75VDC AL | 28480 | 0180-0454 |
| A3C3 | 0180-0453 | 9 | 1 | CAPACITOR-FXD 8700UF+75-10% 40VDC AL | 28480 | 0180-0453 |
| A3C4 | 0180-2798 | 9 | 1 | CAPACITOR-FXD .03F+100-10% 20VDC AL | 28480 | 0180-2798 |
| A3C5 | 0160-4065 | 5 | 1 | CAPACITOR-FXD .1UF +-20% 250VAC(RMS) | 28480 | 0160-4065 |
| A3F1 | 2110-0055 | 2 | 1 | FUSE 4A 250V NTD 1.25X.25 UL (FOR 100/120V OPERATION) | 75915 | 312004 |
| A3F1 | 2110-0002 | 9 | 1 | FUSE 2A 250V NTD 1.25X.25 UL (FOR 220/240V OPERATION) | 75915 | 312002 |
| A3G1 | 10811B | 2 | | OSCILLATOR, XTAL | 28480 | 10811B |
| A3J1- A3J5 | | | | NOT ASSIGNED | | |
| A3J6 | | | | P/O A1W1 FOR OPTIONS 4 & 5 ONLY | | |
| A3J7 | | | | P/O A3W7, NSR | | |
| A3J8 | | | | P/O A3W5, NSR | | |
| A3J9 | | | | P/O A3W2, NSR | | |
| A3J10 | | | | P/O A3W3, NSR | | |
| A3MP1 | | | | NOT ASSIGNED | | |
| A3MP2 | 0400-0001 | 1 | 1 | GROMMET-RND .562-IN-ID .75-IN-GRV-OD | 28480 | 0400-0001 |
| A3MP3 | 0400-0005 | 5 | 1 | GROMMET-RND .438-IN-ID .562-IN-GRV-OD | 28480 | 0400-0005 |
| A3MP4 | 0400-0018 | 0 | 1 | GROMMET-CHAN NCH .052-IN-THK-PNL | 28480 | 0400-0018 |
| A3MP5 | 0403-0265 | 5 | 1 | GUIDE-PC BD BLK NYL .078-BD-THKNS 3-LG | 32559 | E-300 |
| A3MP6 | 2190-0010 | 7 | 9 | WASHER-LK EXT T NO. 8 .168-IN-ID | 28480 | 2190-0010 |
| A3MP7 | 2200-0139 | 4 | | SCREW-MACH 4-40 .25-IN-LG PAN-HD-POZI | 28480 | 2200-0139 |
| A3MP8 | 2200-0147 | 4 | 2 | SCREW-MACH 4-40 .5-IN-LG PAN-HD-POZI | 28480 | 2200-0147 |
| A3MP9 | 2200-0155 | 4 | 4 | SCREW-MACH 4-40 1-IN-LG PAN-HD-POZI | 28480 | 2200-0155 |
| A3MP10 | 2360-0113 | 2 | 6 | SCREW-MACH 6-32 .25-IN-LG PAN-HD-POZI | 00000 | ORDER BY DESCRIPTION |
| A3MP11 | 2360-0180 | 3 | 5 | SCREW-MACH 6-32 .188-IN-LG 82 DEG | 00000 | ORDER BY DESCRIPTION |
| A3MP12 | 1400-0510 | 8 | 1 | CLAMP-CABLE .15-DIA .62-WD NYL | 28480 | 1400-0510 |
| A3MP13 | 1400-0618 | 7 | 1 | CABLE CLAMP-HFCL .125-DIA .5-WD | 28480 | 1400-0618 |
| A3MP14 | 2360-0195 | 0 | 2 | SCREW-MACH 6-32 .312-IN-LG PAN-HD-POZI | 28480 | 2360-0195 |
| A3MP15 | 1400-0673 | 4 | 1 | CLAMP-CABLE 2-DIA .5-WD SST | 28480 | 1400-0673 |
| A3MP16 | 1520-0065 | 2 | 1 | SHOCK MOUNT .5-EFF-HGT 6-LB-LOAD-CAP | 28480 | 1520-0065 |
| A3MP17 | 1520-0094 | 7 | 1 | SHOCK MOUNT .45-EFF-HGT 1-LB-LOAD-CAP | 28480 | 1520-0094 |
| A3MP18 | 2360-0333 | 6 | 7 | SCREW-MACH 6-32 .25-IN-LG 100 DEG | 28480 | 2360-0333 |
| A3MP19 | 2360-0334 | 9 | 2 | SCREW-MACH 6-32 .312-IN-LG 100 DEG | 28480 | 2360-0334 |
| A3MP20 | 2190-0011 | 8 | 8 | WASHER-LK INTL T NO. 10 .195-IN-ID | 28480 | 2190-0011 |
| A3MP21 | 2190-0017 | 4 | 8 | WASHER-LK HLCL NO. 8 .168-IN-ID | 28480 | 2190-0017 |
| A3MP22 | 2190-0018 | 5 | | WASHER-LK HLCL NO. 6 .141-IN-ID | 28480 | 2190-0018 |
| A3MP23 | 2190-0019 | 6 | | WASHER-LK HLCL NO. 4 .115-IN-ID | 28480 | 2190-0019 |
| A3MP24 | 2360-0459 | 9 | 1 | SCREW-MACH 6-32 .375-IN-LG 82 DEG | 00000 | ORDER BY DESCRIPTION |
| A3MP25 | 2190-0102 | 8 | 4 | WASHER-LK INTL T 15/32 IN .472-IN-ID | 28480 | 2190-0102 |
| A3MP26 | 2420-0001 | 5 | 3 | NUT-HEX-W/LKWR 6-32-THD .109-IN-THK | 00000 | ORDER BY DESCRIPTION |
| A3MP27 | 2420-0003 | 7 | 4 | NUT-HEX-DBL-CHAM 6-32-THD .094-IN-THK | 28480 | 2420-0003 |
| A3MP28 | | | | NOT ASSIGNED | | |
| A3MP29 | 2200-0141 | 8 | | SCREW-MACH 4-40 .312-IN-LG PAN-HD-POZI | 28480 | 2200-0141 |
| A3MP30 | 3050-0105 | 6 | | WASHER-FL MTLC NO. 4 .125-IN-ID | 28480 | 3050-0105 |

See introduction to this section for ordering information
*Indicates factory selected value
†Backdating information in Section VII



www.valuetronics.com

Table 6-3. Replaceable Parts

| Reference Designation | HP Part Number | C D | Qty | Description | Mfr Code | Mfr Part Number |
|---|---|---|---|---|---|---|
| A3MP31 | 3050-0010 | 2 | | WASHER-FL MTLC NO. 6 .147-IN-ID | 28480 | 3050-0010 |
| A3MP32 | 2360-0115 | 4 | | SCREW-MACH 6-32 .312-IN-LG PAN-HD-POZI | 00000 | ORDER BY DESCRIPTION |
| A3MP33 | | | | NOT ASSIGNED | | |
| A3MP34 | 6960-0001 | 3 | 1 | PLUG-HOLE DOME-HD FOR .375-D-HOLE STL | 28480 | 6960-0001 |
| A3MP35 | 2360-0197 | 2 | | SCREW-MACH 6-32 .375-IN-LG PAN-HD-POZI | 28480 | 2360-0197 |
| A3MP36 | 2360-0219 | 9 | 2 | SCREW-MACH 6-32 1.375-IN-LG PAN-HD-POZI | 00000 | ORDER BY DESCRIPTION |
| A3MP37 | | | | NOT ASSIGNED | | |
| A3MP38 | 2510-0192 | 6 | 12 | SCREW-MACH 8-32 .25-IN-LG 100 DEG | 00000 | ORDER BY DESCRIPTION |
| A3MP39 | 2510-0195 | 9 | 8 | SCREW-MACH 8-32 .375-IN-LG 100 DEG | 28480 | 2510-0195 |
| A3MP40 | 2580-0002 | 4 | | NUT-HEX-DBL-CHAM 8-32-THD .085-IN-THK | 28480 | 2580-0002 |
| A3MP41 | 2680-0129 | 8 | 8 | SCREW-MACH 10-32 .312-IN-LG PAN-HD-POZI | 00000 | ORDER BY DESCRIPTION |
| A3MP42 | 2950-0035 | 8 | 1 | NUT-HEX-DBL-CHAM 15/32-32-THD | 00000 | ORDER BY DESCRIPTION |
| A3MP43 | 5001-0432 | 1 | 1 | GUSSET, SIDE | 28480 | 5001-0432 |
| A3MP44 | 5020-8803 | 6 | 1 | FRAME-FRONT | 28480 | 5020-8803 |
| A3MP45 | 5020-8883 | 2 | 1 | STRUT CORNER | 28480 | 5020-8883 |
| A3MP46 | 08673-00013 | 0 | 1 | CHASSIS M/F | 28480 | 08673-00013 |
| A3MP47 | | | | NOT ASSIGNED | | |
| A3MP48 | | | | NOT ASSIGNED | | |
| A3MP49 | 08673-00015 | 2 | 1 | REAR PANEL M/F | 28480 | 08673-00015 |
| A3MP50 | 08673-00023 | 2 | 1 | CHASSIS CONT MOD | 28480 | 08673-00023 |
| A3MP51 | 08673-00048 | 9 | 1 | SUPPORT, RECT. BD. BOARD | 28480 | 08673-00048 |
| A3MP52 | 08673-20036 | 9 | 1 | HEAT SINK "A" | 28480 | 08673-20036 |
| A3MP53 | 08673-20037 | 0 | 1 | HEAT SINK "B" | 28480 | 08673-20037 |
| A3MP54 | 08673-20042 | 7 | 1 | HEAT SINK | 28480 | 08673-20042 |
| A3MP55 | 08673-20067 | 6 | 1 | FRAME SUPPORT | 28480 | 08673-20067 |
| A3MP56 | 86701-00016 | 2 | 1 | SUPPORT-CAPACITOR | 28480 | 86701-00016 |
| A3MP57 | 86701-00017 | 3 | 1 | DISK- FAN SHIELD | 28480 | 86701-00017 |
| A3MP58 | 86701-00007 | 1 | 1 | GUARD FAN | 28480 | 86701-00007 |
| A3MP59 | 2200-0115 | 6 | 1 | SCREW-MACH 4-40 .75-IN-LG PAN-HD-POZI | 00000 | ORDER BY DESCRIPTION |
| A3MP60-A3MP65 | | | | NOT ASSIGNED | | |
| A3MP66 | 86701-00038 | 8 | 1 | STRUT ASSEMBLY (LEFT) | 28480 | 86701-00038 |
| A3MP67 | 86701-00039 | 9 | 1 | STRUT ASSEMBLY (RIGHT) | 28480 | 86701-00039 |
| A3MP68 | 86701-00042 | 4 | 1 | SUPPORT-MOUNT (BOTTOM) | 28480 | 86701-00042 |
| A3MP69 | 86701-00043 | 5 | 1 | SUPPORT-MOUNT (TOP) | 28480 | 86701-00043 |
| A3MP70 | 86701-00044 | 6 | 2 | SNUBBER | 28480 | 86701-00044 |
| A3MP71 | 86701-20002 | 8 | 1 | COOLING FAN | 28480 | 86701-20002 |
| A3MP72 | | | | NOT ASSIGNED | | |
| A3MP73 | | | | NOT ASSIGNED | | |
| A3MP74 | 86701-20005 | 1 | 1 | GUIDE-P.C. BOARD (REAR) | 28480 | 86701-20005 |
| A3MP75 | 86701-20006 | 2 | 1 | GUIDE-P.C. BOARD (FRONT) | 28480 | 86701-20006 |
| A3MP76 | 86701-20007 | 3 | 1 | FRAME-MOD (REAR) | 28480 | 86701-20007 |
| A3MP77 | | | | NOT ASSIGNED | | |
| A3MP78 | 1200-0147 | 3 | 16 | INSULATOR-FLG-BSHG NYLON | 28480 | 1200-0147 |
| A3MP79-A3MP82 | | | | NOT ASSIGNED | | |
| A3MP83 | 1400-0249 | 0 | | CABLE TIE .062-.625-DIA .091-WD NYL | 06383 | PLT1M-8 |
| A3MP84 | 2200-0103 | 2 | | SCREW-MACH 4-40 .25-IN-LG PAN-HD-POZI | 28480 | 2200-0103 |
| A3MP85 | 2200-0105 | 4 | | SCREW-MACH 4-40 .312-IN-LG PAN-HD-POZI | 00000 | ORDER BY DESCRIPTION |
| A3MP86 | 2200-0138 | 3 | | SCREW-MACH 4-40 .188-IN-LG 100 DEG | 28480 | 2200-0138 |
| A3MP87 | 2200-0149 | 6 | | SCREW-MACH 4-40 .625-IN-LG PAN-HD-POZI | 00000 | ORDER BY DESCRIPTION |
| A3MP88 | 2200-0153 | 2 | 16 | SCREW-MACH 4-40 .875-IN-LG PAN-HD-POZI | 00000 | ORDER BY DESCRIPTION |
| A3MP89 | 2360-0207 | 5 | 9 | SCREW-MACH 6-32 .875-IN-LG PAN-HD-POZI | 00000 | ORDER BY DESCRIPTION |
| A3MP90 | 6960-0016 | 0 | | PLUG-HOLE TR-HD FOR .125-D-HOLE NYL | 28480 | 6960-0016 |
| A3MP91 | 5021-3208 | 7 | | HOUSING-REF BLK | 28480 | 5021-3208 |
| A3MP92 | | | | NOT ASSIGNED | | |
| A3MP93 | 08673-00014 | 1 | 1 | DIVIDER CENTER | 28480 | 08673-00014 |
| A3MP94 | | | | NOT ASSIGNED | | |
| A3MP95 | | | | NOT ASSIGNED | | |
| A3MP96 | 86701-00024 | 2 | | SCOOP AIR | 28480 | 86701-00024 |
| A3MP97 | 86701-00028 | 6 | 1 | SPRING FLAT | 28480 | 86701-00028 |
| A3MP98 | 86701-00029 | 7 | | BAFFLE AIR TOP | 28480 | 86701-00029 |
| A3MP99 | 86701-00030 | 0 | | BAFFLE AIR BOTTOM | 28480 | 86701-00030 |
| A3MP100 | 86701-00044 | 6 | | SNUBBER | 28480 | 86701-00044 |
| A3MP101-A3MP104 | | | | NOT ASSIGNED | | |

A3

See introduction to this section for ordering information
*Indicates factory selected value
†Backdating information in Section VII



www.valuetronics.com

A3

Table 6-3. Replaceable Parts

| Reference Designation | HP Part Number | C D | Qty | Description | Mfr Code | Mfr Part Number |
|---|---|---|---|---|---|---|
| A3MP105 | 2190-0010 | 7 | | WASHER-LK EXT T NO. 8 .168-IN-ID | 28480 | 2190-0010 |
| A3MP106 | 1200-0147 | 3 | | INSULATOR-FLG-BSHG NYLON | 28480 | 1200-0147 |
| A3MP107 | 2200-0153 | 2 | | SCREW-MACH 4-40 .875-IN-LG PAN-HD-POZI | 00000 | ORDER BY DESCRIPTION |
| A3Q1 | 1854-0618 | 8 | 2 | TRANSISTOR NPN SI DARL TO-3 PD=150W | 04713 | MJ3000 |
| A3Q2 | 1854-0294 | 6 | 1 | TRANSISTOR NPN SI TO-3 PD=115W FT=500KHZ | 28480 | 1854-0294 |
| A3Q3 | 1854-0618 | 8 | | TRANSISTOR NPN SI DARL TO-3 PD=150W | 04713 | MJ3000 |
| A3Q4 | 1854-0679 | 1 | 1 | TRANSISTOR NPN 2N5885 SI TO-3 PD=200W | 04713 | 2N5885 |
| A3T1 | 9100-2653 | 6 | 1 | TRANSFORMER | 28480 | 9100-2653 |
| A3W1 | 86701-60046 | 4 | 1 | CABLE ASSY A1 M/B TO YTO FM IN (BRN) | 28480 | 86701-60046 |
| A3W2 | 86701-60007 | 7 | 1 | CABLE ASSY-FREQ. STD. OUTPUT(GRAY/VIO) | 28480 | 86701-60007 |
| A3W3 | 86701-60063 | 5 | 1 | CABLE ASSY-FREQ. REF. (GRAY) | 28480 | 86701-60063 |
| A3W4 | 86701-60039 | 5 | 1 | CABLE ASSY-YTM TUNE (YELLOW) | 28480 | 86701-60039 |
| A3W5 | 86701-60005 | 5 | 1 | CABLE ASSY-10 MHZ OUTPUT (GRAY/BLUE) | 28480 | 86701-60005 |
| A3W6 | 86701-60049 | 7 | 1 | CABLE ASSY-10 MHZ OUTPUT (BLUE) | 28480 | 86701-60049 |
| A3W7 | 86701-60004 | 4 | 1 | CABLE ASSY-100 MHZ OUTPUT (GRAY/GREEN) | 28480 | 86701-60004 |
| A3W8 | 86701-60053 | 3 | 1 | CABLE ASSY-M/N OUTPUT (WHITE/ORANGE) | 28480 | 86701-60053 |
| A3W9-A3W12 | | | | NOT ASSIGNED | | |
| A3W13 | 86701-60006 | 6 | 1 | CABLE ASSY-FREQ. STD. INPUT (GRAY/BLACK) | 28480 | 86701-60006 |
| A3W14 | 86701-60056 | 6 | 1 | CABLE ASSY-20/30 MHZ OUTPUT (GREEN) | 28480 | 86701-60056 |
| A3W15 | 86701-60033 | 9 | 1 | CABLE ASSY (VIO) A3 M/B TO A3A9A2 YTO | 28480 | 86701-60033 |
| A3W16 | 86701-60055 | 5 | 1 | CABLE ASSY (GRAY) A3 M/B TO A3A9 YTO TUN | 28480 | 86701-60055 |
| A3W17 | 86701-60054 | 4 | 1 | CABLE ASSY (WHITE) A3 M/B TO A3A9 IFM IN | 28480 | 86701-60054 |

See introduction to this section for ordering information
*Indicates factory selected value
†Backdating information in Section VII



www.valuetronics.com

Table 6-3. Replaceable Parts

| Reference Designation | HP Part Number | C D | Qty | Description | Mfr Code | Mfr Part Number |
|---|---|---|---|---|---|---|
| A4A1 | 08673-60001 | 2 | 1 | FRONT PANEL BOARD ASSEMBLY (DOES NOT INCLUDE R1, R2, A4DS1-14, A4M1, A4U1) | 28480 | 08673-60001 |
| A4A1 | 08673-60129 | 5 | 1 | FRONT PANEL BOARD ASSEMBLY (INCLUDES R1, R2 AND A4U1 BUT NOT A4DS1-14 OR A4M1) | 28480 | 08673-60129 |
| A4A1C1 | 0180-3311 | 4 | 1 | CAPACITOR ELECTROLYTIC 8.8UF +-20% 50V | 28480 | 0180-3311 |
| A4A1DS1-<br>A4A1DS14<br>A4A1DS15- | | | | NOT ASSIGNED | | |
| A4A1DS37 | 1990-0665 | 3 | 23 | LED-LAMP LUM-INT=1MCD IF=20MA-MAX BVR=5V | 28480 | 1990-0665 |
| A4A1DS38 | 1990-0486 | 6 | 4 | LED-LAMP LUM-INT=1MCD IF=20MA-MAX BVR=5V | 28480 | 5082-4684 |
| A4A1DS39 | 1990-0486 | 6 | | LED-LAMP LUM-INT=1MCD IF=20MA-MAX BVR=5V | 28480 | 5082-4684 |
| A4A1DS40 | 1990-0486 | 6 | | LED-LAMP LUM-INT=1MCD IF=20MA-MAX BVR=5V | 28480 | 5082-4684 |
| A4A1DS41 | 1990-0486 | 6 | | LED-LAMP LUM-INT=1MCD IF=20MA-MAX BVR=5V | 28480 | 5082-4684 |
| A4A1DS42 | 2140-0092 | 0 | 5 | LAMP-INCAND 685 5VDC 60MA T-1-BULB | 00115 | 685 TIP END |
| A4A1DS43 | 2140-0092 | 0 | | LAMP-INCAND 685 5VDC 60MA T-1-BULB | 00115 | 685 TIP END |
| A4A1DS44 | 2140-0092 | 0 | | LAMP-INCAND 685 5VDC 60MA T-1-BULB | 00115 | 685 TIP END |
| A4A1DS45 | 2140-0253 | 5 | 2 | LAMP-INCAND 6839 28VDC 24MA T-1-BULB | 1F556 | 6839 |
| A4A1DS46 | 2140-0253 | 5 | | LAMP-INCAND 6839 28VDC 24MA T-1-BULB | 1F556 | 6839 |
| A4A1DS47 | 2140-0092 | 0 | | LAMP-INCAND 685 5VDC 60MA T-1-BULB | 00115 | 685 TIP END |
| A4A1DS48 | 2140-0092 | 0 | | LAMP-INCAND 685 5VDC 60MA T-1-BULB | 00115 | 685 TIP END |
| A4A1J1 | 1251-3119 | 2 | 1 | CONNECTOR 20-PIN M RECTANGULAR | 28480 | 1251-3119 |
| A4A1J2 | 1251-4737 | 2 | 1 | CONNECTOR 50-PIN M RECTANGULAR | 28480 | 1251-4737 |
| A4A1J3 | 1251-5721 | 6 | 1 | CONNECTOR 40-PIN M POST TYPE | 28480 | 1251-5721 |
| A4A1MP1 | 0361-0064 | 2 | 7 | EYELET-RLD-FLG .059-OD .125-LG .006-THK | 28480 | 0361-0064 |
| A4A1MP2 | 1200-0645 | 6 | 2 | SOCKET-STRP 12-CONT DIP-SLDR | 28480 | 1200-0645 |
| A4A1MP3 | 1200-0874 | 3 | 4 | SOCKET-STRP 22-CONT SIP DIP-SLDR | 28480 | 1200-0874 |
| A4A1MP4 | 1251-0600 | 0 | 2 | CONNECTOR-SGL CONT PIN 1.14-MM-BSC-SZ SQ | 28480 | 1251-0600 |
| A4A1MP5 | 86290-00034 | 6 | 14 | LAMP-CONTACT | 28480 | 86290-00034 |
| A4A1MP6 | 0361-1160 | 1 | 7 | RIVET | 28480 | 0361-1160 |
| A4A1MP7 | 0360-0270 | 0 | 2 | TERMINAL-SLDR LUG LK-MTG FOR-#10-SCR | 28480 | 0360-0270 |
| A4A1MP8 | 2190-0016 | 3 | 4 | WASHER-LK INTL T 3/8 IN .377-IN-ID | 28480 | 2190-0016 |
| A4A1MP9 | 2190-0067 | 4 | 1 | WASHER-LK INTL T 1/4 IN .256-IN-ID | 28480 | 2190-0067 |
| A4A1MP10 | 2950-0001 | 8 | 3 | NUT-HEX-DBL-CHAM 3/8-32-THD .094-IN-THK | 00000 | ORDER BY DESCRIPTION |
| A4A1MP11 | 2950-0072 | 3 | 1 | NUT-HEX-DBL-CHAM 1/4-32-THD .062-IN-THK | 00000 | ORDER BY DESCRIPTION |
| A4A1R1 | 2100-2590 | 3 | 1 | RESISTOR-VAR CONTROL CCP 10K 10% 10CW | 28480 | 2100-2590 |
| A4A1R2 | 2100-4065 | 1 | 1 | RESISTOR-VAR CONTROL CP 10K 10% LIN | 28480 | 2100-4065 |
| A4A1R3 | 0757-0401 | 0 | 1 | RESISTOR 100 1% .125W F TC=0+-100 | 24546 | C4-1/8-T0-101-F |
| A4A1R4 | 0757-0417 | 8 | 1 | RESISTOR 562 1% .125W F TC=0+-100 | 24546 | C4-1/8-T0-562R-F |
| A4A1S1 | 5060-9436 | 7 | 58 | PUSHBUTTON SWITCH P.C. MOUNT | 28480 | 5060-9436 |
| | 5041-0819 | 2 | 1 | KEY CAP-HALF, SKY GRAY "0" | 28480 | 5041-0819 |
| A4A1S2 | 5060-9436 | 7 | | PUSHBUTTON SWITCH P.C. MOUNT | 28480 | 5060-9436 |
| | 5041-0811 | 4 | 1 | KEY CAP-HALF, SKY GRAY "1" | 28480 | 5041-0811 |
| A4A1S3 | 5060-9436 | 7 | | PUSHBUTTON SWITCH P.C. MOUNT | 28480 | 5060-9436 |
| | 5041-0812 | 5 | 1 | KEY CAP-HALF, SKY GRAY "2" | 28480 | 5041-0812 |
| A4A1S4 | 5060-9436 | 7 | | PUSHBUTTON SWITCH P.C. MOUNT | 28480 | 5060-9436 |
| | 5041-0813 | 6 | 1 | KEY CAP-HALF, SKY GRAY "3" | 28480 | 5041-0813 |
| A4A1S5 | 5060-9436 | 7 | | PUSHBUTTON SWITCH P.C. MOUNT | 28480 | 5060-9436 |
| | 5041-0814 | 7 | 1 | KEY CAP-HALF, SKY GRAY "4" | 28480 | 5041-0814 |
| A4A1S6 | 5060-9436 | 7 | | PUSHBUTTON SWITCH P.C. MOUNT | 28480 | 5060-9436 |
| | 5041-0815 | 8 | 1 | KEY CAP-HALF, SKY GRAY "5" | 28480 | 5041-0815 |
| A4A1S7 | 5060-9436 | 7 | | PUSHBUTTON SWITCH P.C. MOUNT | 28480 | 5060-9436 |
| | 5041-0816 | 9 | 2 | KEY CAP-HALF, SKY GRAY "6" | 28480 | 5041-0816 |
| A4A1S8 | 5060-9436 | 7 | | PUSHBUTTON SWITCH P.C. MOUNT | 28480 | 5060-9436 |
| | 5041-0817 | 0 | 1 | KEY CAP-HALF, SKY GRAY "7" | 28480 | 5041-0817 |
| A4A1S9 | 5060-9436 | 7 | | PUSHBUTTON SWITCH P.C. MOUNT | 28480 | 5060-9436 |
| | 5041-0818 | 1 | 1 | KEY CAP-HALF, SKY GRAY "8" | 28480 | 5041-0818 |
| A4A1S10 | 5060-9436 | 7 | | PUSHBUTTON SWITCH P.C. MOUNT | 28480 | 5060-9436 |
| | 5041-0816 | 9 | | KEY CAP-HALF, SKY GRAY "6" | 28480 | 5041-0816 |
| A4A1S11 | 5060-9436 | 7 | | PUSHBUTTON SWITCH P.C. MOUNT | 28480 | 5060-9436 |
| | 5041-0122 | 0 | 8 | KEY CAP-QUARTER, JADE GRAY (BLANK) | 28480 | 5041-0122 |
| A4A1S12 | 5060-9436 | 7 | | PUSHBUTTON SWITCH P.C. MOUNT | 28480 | 5060-9436 |
| | 5041-0128 | 6 | 4 | KEY CAP-HALF, JADE GRAY (ILLUMINATED) | 28480 | 5041-0128 |

See introduction to this section for ordering information
*Indicates factory selected value
†Backdating information in Section VII



www.valuetronics.com

Table 6-3. Replaceable Parts

| Reference Designation | HP Part Number | C D | Qty | Description | Mfr Code | Mfr Part Number |
|---|---|---|---|---|---|---|
| A4A1S13 | 5060-9436 | 7 | | PUSHBUTTON SWITCH P.C. MOUNT | 28480 | 5060-9436 |
| | 5041-0122 | 0 | | KEY CAP-QUARTER, JADE GRAY (BLANK) | 28480 | 5041-0122 |
| A4A1S14 | 5060-9436 | 7 | | PUSHBUTTON SWITCH P.C. MOUNT | 28480 | 5060-9436 |
| | 5041-0123 | 1 | 3 | KEY CAP-HALF, JADE GRAY (BLANK) | 28480 | 5041-0123 |
| A4A1S15 | 5060-9436 | 7 | | PUSHBUTTON SWITCH P.C. MOUNT | 28480 | 5060-9436 |
| | 5041-0128 | 6 | | KEY CAP-HALF, JADE GRAY (ILLUMINATED) | 28480 | 5041-0128 |
| A4A1S16 | 5060-9436 | 7 | | PUSHBUTTON SWITCH P.C. MOUNT | 28480 | 5060-9436 |
| | 5041-0123 | 1 | | KEY CAP-HALF, JADE GRAY (BLANK) | 28480 | 5041-0123 |
| A4A1S17 | 5060-9436 | 7 | | PUSHBUTTON SWITCH P.C. MOUNT | 28480 | 5060-9436 |
| | 5041-0122 | 0 | | KEY CAP-QUARTER, JADE GRAY (BLANK) | 28480 | 5041-0122 |
| A4A1S18 | 5060-9436 | 7 | | PUSHBUTTON SWITCH P.C. MOUNT | 28480 | 5060-9436 |
| | 5041-1829 | 6 | 4 | KEY CAP-QUARTER, SHORT DB, UP ARROW | 28480 | 5041-1829 |
| A4A1S19 | 5060-9436 | 7 | | PUSHBUTTON SWITCH P.C. MOUNT | 28480 | 5060-9436 |
| | 5041-1829 | 6 | | KEY CAP-QUARTER, SHORT DB, DOWN ARROW | 28480 | 5041-1829 |
| A4A1S20 | 5060-9436 | 7 | | PUSHBUTTON SWITCH P.C. MOUNT | 28480 | 5060-9436 |
| | 5041-0285 | 6 | 14 | KEY CAP-QUARTER, LITE GRAY (ILLUMINATED) | 28480 | 5041-0285 |
| A4A1S21 | 5060-9436 | 7 | | PUSHBUTTON SWITCH P.C. MOUNT | 28480 | 5060-9436 |
| | 5041-1819 | 5 | 1 | KEY CAP-QUARTER "STEPS ms" | 28480 | 5041-1819 |
| A4A1S22 | 5060-9436 | 7 | | PUSHBUTTON SWITCH P.C. MOUNT | 28480 | 5060-9436 |
| | 5041-1820 | 8 | 1 | KEY CAP-QUARTER "<------" | 28480 | 5041-1920 |
| A4A1S23 | 5060-9436 | 7 | | PUSHBUTTON SWITCH P.C. MOUNT | 28480 | 5060-9436 |
| | 5041-0808 | 9 | 1 | KEY CAP-HALF, SKY GRAY "DECIMAL" | 28480 | 5041-0809 |
| A4A1S24 | 5060-9436 | 7 | | PUSHBUTTON SWITCH P.C. MOUNT | 28480 | 5060-9436 |
| | 5041-0127 | 5 | 1 | KEY CAP-QUARTER, SHORT DB (ILLUMINATED) | 28480 | 5041-0127 |
| A4A1S25 | 5060-9436 | 7 | | PUSHBUTTON SWITCH P.C. MOUNT | 28480 | 5060-9436 |
| | 5041-0128 | 6 | | KEY CAP-HALF, JADE GRAY (ILLUMINATED) | 28480 | 5041-0128 |
| A4A1S26 | 5060-9436 | 7 | | PUSHBUTTON SWITCH P.C. MOUNT | 28480 | 5060-9436 |
| | 5041-1829 | 6 | | KEY CAP-QUARTER, SHORT DB, UP ARROW | 28480 | 5041-1829 |
| | 5041-2797 | 9 | 1 | KEY CAP-QUARTER, SHORT "+10dBm" (OPTION 001 AND 005 ONLY) | 28480 | 5041-2797 |
| A4A1S27 | 5060-9436 | 7 | | PUSHBUTTON SWITCH P.C. MOUNT | 28480 | 5060-9436 |
| | 5041-0285 | 6 | | KEY CAP-QUARTER, LITE GRAY (ILLUMINATED) | 28480 | 5041-0285 |
| A4A1S28 | 5060-9436 | 7 | | PUSHBUTTON SWITCH P.C. MOUNT | 28480 | 5060-9436 |
| | 5041-0285 | 6 | | KEY CAP-QUARTER, LITE GRAY (ILLUMINATED) | 28480 | 5041-0285 |
| A4A1S29 | 5060-9436 | 7 | | PUSHBUTTON SWITCH P.C. MOUNT | 28480 | 5060-9436 |
| | 5041-1829 | 6 | | KEY CAP-QUARTER, SHORT DB, DOWN ARROW | 28480 | 5041-1829 |
| | 5041-2796 | 8 | 1 | KEY CAP-QUARTER, SHORT "+0dBm" (OPTION 001 AND 005 ONLY) | 28480 | 5041-2796 |
| A4A1S30 | 5060-9436 | 7 | | PUSHBUTTON SWITCH P.C. MOUNT | 28480 | 5060-9436 |
| | 5041-0285 | 6 | | KEY CAP-QUARTER, LITE GRAY (ILLUMINATED) | 28480 | 5041-0285 |
| A4A1S31 | 5060-9436 | 7 | | PUSHBUTTON SWITCH P.C. MOUNT | 28480 | 5060-9436 |
| | 5041-0122 | 0 | | KEY CAP-QUARTER, JADE GRAY (BLANK) | 28480 | 5041-0122 |
| A4A1S32 | 5060-9436 | 7 | | PUSHBUTTON SWITCH P.C. MOUNT | 28480 | 5060-9436 |
| | 5041-0122 | 0 | | KEY CAP-QUARTER, JADE GRAY (BLANK) | 28480 | 5041-0122 |
| A4A1S33 | 5060-9436 | 7 | | PUSHBUTTON SWITCH P.C. MOUNT | 28480 | 5060-9436 |
| | 5041-0285 | 6 | | KEY CAP-QUARTER, LITE GRAY (ILLUMINATED) | 28480 | 5041-0285 |
| A4A1S34 | 5060-9436 | 7 | | PUSHBUTTON SWITCH P.C. MOUNT | 28480 | 5060-9436 |
| | 5041-1827 | 4 | 1 | KEY CAP-QUARTER, SHORT DB "FREQUENCY" | 28480 | 5041-1827 |
| A4A1S35 | 5060-9436 | 7 | | PUSHBUTTON SWITCH P.C. MOUNT | 28480 | 5060-9436 |
| | 5041-1828 | 5 | 1 | KEY CAP-QUARTER, SHORT DB "FREQ INCR" | 28480 | 5041-1828 |
| A4A1S36 | 5060-9436 | 7 | | PUSHBUTTON SWITCH P.C. MOUNT | 28480 | 5060-9436 |
| | 5041-0285 | 6 | | KEY CAP-QUARTER, LITE GRAY (ILLUMINATED) | 28480 | 5041-0285 |
| A4A1S37 | 5060-9436 | 7 | | PUSHBUTTON SWITCH P.C. MOUNT | 28480 | 5060-9436 |
| | 5041-1917 | 3 | 1 | KEY CAP-QUARTER "STO" | 28480 | 5041-1917 |
| A4A1S38 | 5060-9436 | 7 | | PUSHBUTTON SWITCH P.C. MOUNT | 28480 | 5060-9436 |
| | 5041-1918 | 4 | 1 | KEY CAP-QUARTER "RCL" | 28480 | 5041-1918 |
| A4A1S39 | 5060-9436 | 7 | | PUSHBUTTON SWITCH P.C. MOUNT | 28480 | 5060-9436 |
| | 5041-0122 | 0 | | KEY CAP-QUARTER, JADE GRAY (BLANK) | 28480 | 5041-0122 |
| A4A1S40 | 5060-9436 | 7 | | PUSHBUTTON SWITCH P.C. MOUNT | 28480 | 5060-9436 |
| | 5041-0384 | 6 | 4 | KEY CAP-QUARTER, SKY GRAY (ILLUMINATED) | 28480 | 5041-0384 |
| A4A1S41 | 5060-9436 | 7 | | PUSHBUTTON SWITCH P.C. MOUNT | 28480 | 5060-9436 |
| | 5041-0384 | 6 | | KEY CAP-QUARTER, SKY GRAY (ILLUMINATED) | 28480 | 5041-0384 |
| A4A1S42 | 5060-9436 | 7 | | PUSHBUTTON SWITCH P.C. MOUNT | 28480 | 5060-9436 |
| | 5041-0123 | 1 | | KEY CAP-HALF, JADE GRAY (BLANK) | 28480 | 5041-0123 |
| A4A1S43 | 5060-9436 | 7 | | PUSHBUTTON SWITCH P.C. MOUNT | 28480 | 5060-9436 |
| | 5041-0384 | 6 | | KEY CAP-QUARTER, SKY GRAY (ILLUMINATED) | 28480 | 5041-0384 |
| A4A1S44 | 5060-9436 | 7 | | PUSHBUTTON SWITCH P.C. MOUNT | 28480 | 5060-9436 |
| | 5041-0122 | 0 | | KEY CAP-QUARTER, JADE GRAY (BLANK) | 28480 | 5041-0122 |



See introduction to this section for ordering information
*Indicates factory selected value
†Backdating information in Section VII

www.valuetronics.com

Table 6-3 Replaceable Parts

| Reference Designation | HP Part Number | C D | Qty | Description | Mfr Code | Mfr Part Number |
|---|---|---|---|---|---|---|
| A4A1S45 | 5060-9436 | 7 | | PUSHBUTTON SWITCH P.C. MOUNT | 28480 | 5060-9436 |
| | 5041-0384 | 6 | | KEY CAP-QUARTER, SKY GRAY (ILLUMINATED) | 28480 | 5041-0384 |
| A4A1S46 | 5060-9436 | 7 | | PUSHBUTTON SWITCH P.C. MOUNT | 28480 | 5060-9436 |
| | 5041-0285 | 6 | | KEY CAP-QUARTER, LITE GRAY (ILLUMINATED) | 28480 | 5041-0285 |
| A4A1S47 | 5060-9436 | 7 | | PUSHBUTTON SWITCH P.C. MOUNT | 28480 | 5060-9436 |
| | 5041-0285 | 6 | | KEY CAP-QUARTER, LITE GRAY (ILLUMINATED) | 28480 | 5041-0285 |
| A4A1S48 | 5060-9436 | 7 | | PUSHBUTTON SWITCH P.C. MOUNT | 28480 | 5060-9436 |
| | 5041-0285 | 6 | | KEY CAP-QUARTER, LITE GRAY (ILLUMINATED) | 28480 | 5041-0285 |
| A4A1S49 | 5060-9436 | 7 | | PUSHBUTTON SWITCH P.C. MOUNT | 28480 | 5060-9436 |
| | 5041-0285 | 6 | | KEY CAP-QUARTER, LITE GRAY (ILLUMINATED) | 28480 | 5041-0285 |
| A4A1S50 | 5060-9436 | 7 | | PUSHBUTTON SWITCH P.C. MOUNT | 28480 | 5060-9436 |
| | 5041-0285 | 6 | | KEY CAP-QUARTER, LITE GRAY (ILLUMINATED) | 28480 | 5041-0285 |
| A4A1S51 | 5060-9436 | 7 | | PUSHBUTTON SWITCH P.C. MOUNT | 28480 | 5060-9436 |
| | 5041-0285 | 6 | | KEY CAP-QUARTER, LITE GRAY (ILLUMINATED) | 28480 | 5041-0285 |
| A4A1S52 | 5060-9436 | 7 | | PUSHBUTTON SWITCH P.C. MOUNT | 28480 | 5060-9436 |
| | 5041-0285 | 6 | | KEY CAP-QUARTER, LITE GRAY (ILLUMINATED) | 28480 | 5041-0285 |
| A4A1S53 | 5060-9436 | 7 | | PUSHBUTTON SWITCH P.C. MOUNT | 28480 | 5060-9436 |
| | 5041-0285 | 6 | | KEY CAP-QUARTER, LITE GRAY (ILLUMINATED) | 28480 | 5041-0285 |
| A4A1S54 | 5060-9436 | 7 | | PUSHBUTTON SWITCH P.C. MOUNT | 28480 | 5060-9436 |
| | 5041-0128 | 6 | | KEY CAP-HALF, JADE GRAY (ILLUMINATED) | 28480 | 5041-0128 |
| A4A1S55 | 5060-9436 | 7 | | PUSHBUTTON SWITCH P.C. MOUNT | 28480 | 5060-9436 |
| | 5041-0122 | 0 | | KEY CAP-QUARTER, JADE GRAY (BLANK) | 28480 | 5041-0122 |
| A4A1S56 | 5060-9436 | 7 | | PUSHBUTTON SWITCH P.C. MOUNT | 28480 | 5060-9436 |
| | 5041-1921 | 9 | 2 | KEY CAP-QUARTER "GHZ" | 28480 | 5041-1921 |
| A4A1S57 | 5060-9436 | 7 | | PUSHBUTTON SWITCH P.C. MOUNT | 28480 | 5060-9436 |
| | 5041-1921 | 9 | | KEY CAP-QUARTER "MHZ" | 28480 | 5041-1921 |
| A4A1S58 | 5060-9436 | 7 | | PUSHBUTTON SWITCH P.C. MOUNT | 28480 | 5060-9436 |
| | 5041-1923 | 1 | 1 | KEY CAP-QUARTER "KHZ" | 28480 | 5041-1923 |
| A4A1XDS1-<br>A4A1XDS41<br>A4A1XDS42-<br>A4A1XDS48 | 86290-00034 | 6 | | NOT ASSIGNED<br>LAMP CONTACT | 28480 | 86290-00034 |
| A4DS1 | 1990-0821 | 3 | 1 | DISPLAY (+-) | 28480 | 1990-0821 |
| A4DS2 | 1990-0822 | 4 | 13 | DISPLAY-NUMERIC | 28480 | 1990-0822 |
| A4DS3 | 1990-0822 | 4 | | DISPLAY-NUMERIC | 28480 | 1990-0822 |
| A4DS4 | 1990-0822 | 4 | | DISPLAY-NUMERIC | 28480 | 1990-0822 |
| A4DS5 | 1990-0822 | 4 | | DISPLAY-NUMERIC | 28480 | 1990-0822 |
| A4DS6 | 1990-0822 | 4 | | DISPLAY-NUMERIC | 28480 | 1990-0822 |
| A4DS7 | 1990-0822 | 4 | | DISPLAY-NUMERIC | 28480 | 1990-0822 |
| A4DS8 | 1990-0822 | 4 | | DISPLAY-NUMERIC | 28480 | 1990-0822 |
| A4DS9 | 1990-0822 | 4 | | DISPLAY-NUMERIC | 28480 | 1990-0822 |
| A4DS10 | 1990-0822 | 4 | | DISPLAY-NUMERIC | 28480 | 1990-0822 |
| A4DS11 | 1990-0822 | 4 | | DISPLAY-NUMERIC | 28480 | 1990-0822 |
| A4DS12 | 1990-0822 | 4 | | DISPLAY-NUMERIC | 28480 | 1990-0822 |
| A4DS13 | 1990-0822 | 4 | | DISPLAY-NUMERIC | 28480 | 1990-0822 |
| A4DS14 | 1990-0822 | 4 | | DISPLAY-NUMERIC | 28480 | 1990-0822 |
| | 1990-0892 | 8 | 1 | MATCHED DISPLAY SET, A4DS1-A4DS14 | 28480 | 1990-0892 |
| A4DS15-<br>A4DS41 | | | | NOT ASSIGNED | | |
| A4J1 | | | | P/O A1W1, NSR | | |
| A4J2 | | | | P/O A4W1, NSR | | |
| A4J3 | | | | P/O A4W2, NSR | | |
| A4J4 | | | | P/O A4W3, NSR | | |
| A4J5 | | | | P/O A4W4, NSR | | |
| A4M1 | 1120-0585 | 3 | 1 | METER 2.50-IN; 1 MA FSD; TAUT BAND; LIN | 28480 | 1120-0585 |
| A4MP1 | | | | NOT ASSIGNED | | |
| A4MP2 | 0370-3023 | 8 | 2 | KNOB3/4 JGK .25-IN-ID | 28480 | 0370-3023 |
| A4MP3 | 0510-1148 | 2 | 4 | RETAINER-PUSH ON KB-TO-SHFT EXT | 28480 | 0510-1148 |
| A4MP4 | 0590-0012 | 5 | 4 | NUT-KNRLD-R 15/32-32-THD .062-IN-THK | 00000 | ORDER BY DESCRIPTION |
| A4MP5 | | | | NOT ASSIGNED | | |
| A4MP6 | 2190-0019 | 6 | 2 | WASHER-LK HLCL NO. 4 .115-IN-ID | 28480 | 2190-0019 |
| A4MP7 | 2190-0022 | 1 | 1 | WASHER-LK INTL T 3/8 IN .384-IN-ID | 28480 | 2190-0022 |
| A4MP8 | | | | NOT ASSIGNED | | |
| A4MP9 | 2200-0105 | 4 | 18 | SCREW-MACH 4-40 .312-IN-LG PAN-HD-POZI | 00000 | ORDER BY DESCRIPTION |
| A4MP10 | 2200-0143 | 0 | 2 | SCREW-MACH 4-40 .375-IN-LG PAN-HD-POZI | 28480 | 2200-0143 |

See introduction to this section for ordering information
*Indicates factory selected value
†Backdating information in Section VII



www.valuetronics.com

Table 6-3. Replaceable Parts

| Reference Designation | HP Part Number | C D | Qty | Description | Mfr Code | Mfr Part Number |
|---|---|---|---|---|---|---|
| A4MP11 | 2200-0164 | 5 | 2 | SCREW-MACH 4-40 .188-IN-LG UNCT 82 DEG | 00000 | ORDER BY DESCRIPTION |
| A4MP12 | 2200-0166 | 7 | 18 | SCREW-MACH 4-40 .312-IN-LG 82 DEG | 00000 | ORDER BY DESCRIPTION |
| A4MP13 | 2740-0001 | 3 | 2 | NUT-HEX-DBL-CHAM 10-32-THD .109-IN-THK | 00000 | ORDER BY DESCRIPTION |
| A4MP14 | | | | NOT ASSIGNED | | |
| A4MP15 | | | | NOT ASSIGNED | | |
| A4MP16 | 3050-0161 | 4 | 1 | WASHER-SPR WAVY 1/4 IN .265-IN-ID | 28480 | 3050-0161 |
| A4MP17 | 5040-6928 | 4 | 1 | DIVIDER STRIP | 28480 | 5040-6928 |
| A4MP18 | 5041-1418 | 9 | 1 | ROCKER | 28480 | 5041-1418 |
| A4MP19 | 00310-48801 | 0 | 4 | WASHER-SHOULDERED | 28480 | 00310-48801 |
| A4MP20 | 08640-40044 | 2 | 1 | SCREW-METER ZERO | 28480 | 08640-40044 |
| A4MP21 | 08672-20037 | 9 | 4 | SUPPORT-FRONT PANEL | 28480 | 08672-20037 |
| A4MP22 | 08672-20056 | 2 | 1 | PAD-L.E.D. | 28480 | 08672-20056 |
| A4MP23 | 08672-20057 | 3 | 1 | HEAT SINK-L.E.D. | 28480 | 08672-20057 |
| A4MP24 | 08672-40006 | 4 | 7 | HOUSING-LAMP (LONG) | 28480 | 08672-40006 |
| A4MP25 | 08672-40008 | 6 | 7 | BAR LIGHT (LONG) | 28480 | 08672-40008 |
| A4MP26 | 08672-40010 | 0 | 7 | PLUG LIGHT | 28480 | 08672-40010 |
| A4MP27 | 08673-00001 | 6 | 1 | PANEL (FRONT) | 28480 | 08673-00001 |
| A4MP28 | 08673-00002 | 7 | 1 | PANEL-SUB (FRONT) | 28480 | 08673-00002 |
| A4MP29 | 08673-00017 | 4 | 1 | SPACER-METER | 28480 | 08673-00017 |
| A4MP30 | 08673-20016 | 5 | 1 | HEAT SINK-L.E.D. | 28480 | 08673-20016 |
| A4MP31 | 08673-20018 | 7 | 4 | SUPPORT (BOTTOM) | 28480 | 08673-20018 |
| A4MP32 | 08673-80025 | 2 | 3 | WASHER ASSY | 28480 | 08673-80025 |
| A4MP33 | 0380-1339 | 6 | 4 | SPACER-RND .25-IN-LG .116-IN-ID | 00000 | ORDER BY DESCRIPTION |
| A4MP34 | | | | NOT ASSIGNED | | |
| A4MP35 | | | | NOT ASSIGNED | | |
| A4MP36 | | | | NOT ASSIGNED | | |
| A4MP37 | 08673-20087 | 0 | 1 | WASHER, SHLDR MOD | 28480 | 08673-20087 |
| A4R1 | 0698-3430 | 5 | 1 | RESISTOR 21.5 1% .125W F TC=0+-100 | 03888 | PME55-1/8-T0-21R5-F |
| A4S1 | 3101-2080 | 9 | 1 | SWITCH-LINE DPDT (LINE) | 28480 | 3101-2080 |
| A4U1 | 0960-0683 | 1 | 1 | ROTARY PULSE GENERATOR INPUT POWER: 5VDC | 28480 | 0960-0683 |
| A4W1 | 08673-60036 | 3 | 1 | CABLE ASSEMBLY-ALC | 28480 | 08673-60036 |
| A4W2 | 08673-60037 | 4 | 1 | CABLE ASSEMBLY-AM INPUT | 28480 | 08673-60037 |
| A4W3 | 08673-60038 | 5 | 1 | CABLE ASSEMBLY-FM INPUT | 28480 | 08673-60038 |
| A4W4 | 08673-60039 | 6 | 1 | CABLE ASSEMBLY-PULSE INPUT | 28480 | 08673-60039 |

See introduction to this section for ordering information
*Indicates factory selected value
†Backdating information in Section VII



www.valuetronics.com

Table 6-3. Replaceable Parts

| Reference Designation | HP Part Number | CD | Qty | Description | Mfr Code | Mfr Part Number |
|---|---|---|---|---|---|---|
| A5A1 | 86730-60001 | 6 | 1 | BD AY FRONT PNL | 28480 | 86730-60001 |
| A5A1C1 | 0160-0576 | 5 | 54 | CAPACITOR-FXD .1UF +-20% 50VDC CER | 28480 | 0160-0576 |
| A5A1C2 | 0160-0576 | 5 | | CAPACITOR-FXD .1UF +-20% 50VDC CER | 28480 | 0160-0576 |
| A5A1C3 | 0180-0197 | 8 | 11 | CAPACITOR-FXD 2.2UF+-10% 20VDC TA | 56289 | 150D225X9020A2 |
| A5A1C4 | 0180-0197 | 8 | | CAPACITOR-FXD 2.2UF+-10% 20VDC TA | 56289 | 150D225X9020A2 |
| A5A1C5 | 0180-0197 | 8 | | CAPACITOR-FXD 2.2UF+-10% 20VDC TA | 56289 | 150D225X9020A2 |
| A5A1C6 | 0160-0576 | 5 | | CAPACITOR-FXD .1UF +-20% 50VDC CER | 28480 | 0160-0576 |
| A5A1C7 | 0160-0576 | 5 | | CAPACITOR-FXD .1UF +-20% 50VDC CER | 28480 | 0160-0576 |
| A5A1C8 | 0180-0291 | 3 | 9 | CAPACITOR-FXD 1UF+-10% 35VDC TA | 56289 | 150D105X9035A2 |
| A5A1C9 | 0180-2207 | 5 | 3 | CAPACITOR-FXD 100UF+-10% 10VDC TA | 56289 | 150D107X9010R2 |
| A5A1C10 | 0180-0376 | 5 | 1 | CAPACITOR-FXD .47UF+-10% 35VDC TA | 56289 | 150D474X9035A2 |
| A5A1C11 | 0180-2207 | 5 | | CAPACITOR-FXD 100UF+-10% 10VDC TA | 56289 | 150D107X9010R2 |
| A5A1C12 | 0180-0197 | 8 | | CAPACITOR-FXD 2.2UF+-10% 20VDC TA | 56289 | 150D225X9020A2 |
| A5A1C13 | 0180-2141 | 6 | 6 | CAPACITOR-FXD 3.3UF+-10% 50VDC TA | 56289 | 150D335X9050B2 |
| A5A1C14 | 0180-2207 | 5 | | CAPACITOR-FXD 100UF+-10% 10VDC TA | 56289 | 150D107X9010R2 |
| A5A1C15 | 0180-0291 | 3 | | CAPACITOR-FXD 1UF+-10% 35VDC TA | 56289 | 150D105X9035A2 |
| A5A1CR1 | 1901-0050 | 3 | 47 | DIODE-SWITCHING 80V 200MA 2NS DO-35 | 28480 | 1901-0050 |
| A5A1CR2 | 1901-0050 | 3 | | DIODE-SWITCHING 80V 200MA 2NS DO-35 | 28480 | 1901-0050 |
| A5A1CR3 | 1901-0050 | 3 | | DIODE-SWITCHING 80V 200MA 2NS DO-35 | 28480 | 1901-0050 |
| A5A1CR4 | 1901-0050 | 3 | | DIODE-SWITCHING 80V 200MA 2NS DO-35 | 28480 | 1901-0050 |
| A5A1CR5 | 1901-0050 | 3 | | DIODE-SWITCHING 80V 200MA 2NS DO-35 | 28480 | 1901-0050 |
| A5A1CR6 | 1901-0050 | 3 | | DIODE-SWITCHING 80V 200MA 2NS DO-35 | 28480 | 1901-0050 |
| A5A1CR7 | 1901-0050 | 3 | | DIODE-SWITCHING 80V 200MA 2NS DO-35 | 28480 | 1901-0050 |
| A5A1DS1 | 1990-0665 | 3 | 2 | LED-LAMP LUM-INT=1MCD IF=20MA-MAX BVR=5V | 28480 | 1990-0665 |
| A5A1DS2 | 1990-0665 | 3 | | LED-LAMP LUM-INT=1MCD IF=20MA-MAX BVR=5V | 28480 | 1990-0665 |
| A5A1J1 | 1250-0257 | 1 | 10 | CONNECTOR-RF SMB M PC 50-OHM | 28480 | 1250-0257 |
| A5A1J2 | 1250-0257 | 1 | | CONNECTOR-RF SMB M PC 50-OHM | 28480 | 1250-0257 |
| A5A1J3 | 1250-0257 | 1 | | CONNECTOR-RF SMB M PC 50-OHM | 28480 | 1250-0257 |
| A5A1J4 | 1250-0257 | 1 | | CONNECTOR-RF SMB M PC 50-OHM | 28480 | 1250-0257 |
| A5A1J5 | 1250-0257 | 1 | | CONNECTOR-RF SMB M PC 50-OHM | 28480 | 1250-0257 |
| A5A1J6 | 1250-0257 | 1 | | CONNECTOR-RF SMB M PC 50-OHM | 28480 | 1250-0257 |
| A5A1J7 | 1251-8281 | 9 | 3 | CONN-POST TYPE .100-PIN-SPDG 5-CONT | 28480 | 1251-8281 |
| A5A1J8 | 1251-5719 | 2 | 1 | CONNECTOR 26-PIN M POST TYPE | 28480 | 1251-5719 |
| A5A1MP1 | 2190-0067 | 4 | 1 | WASHER-LK INTL T 1/4 IN .256-IN-ID | 28480 | 2190-0067 |
| A5A1MP2 | 2950-0072 | 3 | 1 | NUT-HEX-DBL-CHAM 1/4-32-THD .062-IN-THK | 00000 | ORDER BY DESCRIPTION |
| A5A1Q1 | 1854-0810 | 2 | 35 | TRANSISTOR NPN SI PD=625MW FT=200MHZ | 28480 | 1854-0810 |
| A5A1Q2 | 1854-0810 | 2 | | TRANSISTOR NPN SI PD=625MW FT=200MHZ | 28480 | 1854-0810 |
| A5A1Q3 | 1855-0395 | 0 | 2 | TRANSISTOR J-FET N-CHAN D-MODE TO-52 SI | 17856 | FN2646 |
| A5A1Q4 | 1854-0810 | 2 | | TRANSISTOR NPN SI PD=625MW FT=200MHZ | 28480 | 1854-0810 |
| A5A1Q5 | 1853-0459 | 3 | 15 | TRANSISTOR PNP SI PD=625MW FT=200MHZ | 28480 | 1853-0459 |
| A5A1Q6 | 1855-0395 | 0 | | TRANSISTOR J-FET N-CHAN D-MODE TO-52 SI | 17856 | FN2646 |
| A5A1Q7 | 1854-0810 | 2 | | TRANSISTOR NPN SI PD=625MW FT=200MHZ | 28480 | 1854-0810 |
| A5A1Q8 | 1853-0459 | 3 | | TRANSISTOR PNP SI PD=625MW FT=200MHZ | 28480 | 1853-0459 |
| A5A1Q9 | 1854-0810 | 2 | | TRANSISTOR NPN SI PD=625MW FT=200MHZ | 28480 | 1854-0810 |
| A5A1R1 | 0757-0279 | 0 | 8 | RESISTOR 3.16K 1% .125W F TC=0+-100 | 24546 | C4-1/8-T0-3161-F |
| A5A1R2 | 0757-0279 | 0 | | RESISTOR 3.16K 1% .125W F TC=0+-100 | 24546 | C4-1/8-T0-3161-F |
| A5A1R3 | 0698-3156 | 2 | 11 | RESISTOR 14.7K 1% .125W F TC=0+-100 | 24546 | C4-1/8-T0-1472-F |
| A5A1R4 | 0698-3156 | 2 | | RESISTOR 14.7K 1% .125W F TC=0+-100 | 24546 | C4-1/8-T0-1472-F |
| A5A1R5 | 0698-3458 | 7 | 2 | RESISTOR 348K 1% .125W F TC=0+-100 | 28480 | 0698-3458 |
| A5A1R6 | 0757-0442 | 9 | 21 | RESISTOR 10K 1% .125W F TC=0+-100 | 24546 | C4-1/8-T0-1002-F |
| A5A1R7 | 0757-0442 | 9 | | RESISTOR 10K 1% .125W F TC=0+-100 | 24546 | C4-1/8-T0-1002-F |
| A5A1R8 | 0757-0417 | 8 | 2 | RESISTOR 562 1% .125W F TC=0+-100 | 24546 | C4-1/8-T0-562R-F |
| A5A1R9 | 0757-0346 | 2 | 8 | RESISTOR 10 1% .125W F TC=0+-100 | 24546 | C4-1/8-T0-10R0-F |
| A5A1R10 | 0698-3156 | 2 | | RESISTOR 14.7K 1% .125W F TC=0+-100 | 24546 | C4-1/8-T0-1472-F |
| A5A1R11 | 0698-3156 | 2 | | RESISTOR 14.7K 1% .125W F TC=0+-100 | 24546 | C4-1/8-T0-1472-F |
| A5A1R12 | 0699-0072 | 7 | 1 | RESISTOR 6.81M 1% .125W F TC=0+-150 | 28480 | 0699-0072 |
| A5A1R13 | 0757-0279 | 0 | | RESISTOR 3.16K 1% .125W F TC=0+-100 | 24546 | C4-1/8-T0-3161-F |
| A5A1R14 | 0757-0346 | 2 | | RESISTOR 10 1% .125W F TC=0+-100 | 24546 | C4-1/8-T0-10R0-F |
| A5A1R15 | 0757-0439 | 4 | 3 | RESISTOR 6.81K 1% .125W F TC=0+-100 | 24546 | C4-1/8-T0-6811-F |

A5

See introduction to this section for ordering information
*Indicates factory selected value
†Backdating information in Section VII



www.valuetronics.com

Table 6-3. Replaceable Parts

| Reference Designation | HP Part Number | C D | Qty | Description | Mfr Code | Mfr Part Number |
|---|---|---|---|---|---|---|
| A5A1R16 | 0757-0279 | 0 | | RESISTOR 3.16K 1% .125W F TC=0+-100 | 24546 | C4-1/8-T0-3161-F |
| A5A1R17 | 0757-0442 | 9 | | RESISTOR 10K 1% .125W F TC=0+-100 | 24546 | C4-1/8-T0-1002-F |
| A5A1R18 | 0698-3444 | 1 | 9 | RESISTOR 316 1% .125W F TC=0+-100 | 24546 | C4-1/8-T0-316R-F |
| A5A1R19 | 0757-0442 | 9 | | RESISTOR 10K 1% .125W F TC=0+-100 | 24546 | C4-1/8-T0-1002-F |
| A5A1R20 | 0757-0420 | 3 | 3 | RESISTOR 750 1% .125W F TC=0+-100 | 24546 | C4-1/8-T0-751-F |
| A5A1R21 | 0757-0442 | 9 | | RESISTOR 10K 1% .125W F TC=0+-100 | 24546 | C4-1/8-T0-1002-F |
| A5A1R22 | 2100-1788 | 9 | 1 | RESISTOR-TRMR 500 10% C TOP-ADJ 1-TRN | 73138 | 82PR500 |
| A5A1R23 | 0698-3444 | 1 | | RESISTOR 316 1% .125W F TC=0+-100 | 24546 | C4-1/8-T0-316R-F |
| A5A1R24 | 0757-0280 | 3 | 35 | RESISTOR 1K 1% .125W F TC=0+-100 | 24546 | C4-1/8-T0-1001-F |
| A5A1R25 | 2100-2590 | 3 | 1 | RESISTOR-VAR CONTROL CCP 10K 10% 10CW | 28480 | 2100-2590 |
| A5A1S1 | 5060-9436 | 7 | 1 | PUSHBUTTON SWITCH P.C. MOUNT | 28480 | 5060-9436 |
| A5A1U1 | 1826-1019 | 6 | 2 | ANALOG SWITCH 4 SPST 16-CERDIP | 28480 | 1826-1019 |
| A5A1U2 | 1820-1144 | 6 | 2 | IC GATE TTL LS NOR QUAD 2-INP | 01295 | SN74LS02N |
| A5A1U3 | 1826-0026 | 3 | 2 | IC COMPARATOR PRCN TO-99 PKG | 01295 | LM311L |
| A5A1U4 | 1820-1216 | 3 | 1 | IC DCDR TTL LS 3-TO-8-LINE 3-INP | 01295 | SN74LS138N |
| A5A1U5 | 1826-1019 | 6 | | ANALOG SWITCH 4 SPST 16-CERDIP | 28480 | 1826-1019 |
| A5A1VR1 | 1902-0962 | 8 | 2 | DIODE-ZNR 15V 5% DO-35 PD=.4W TC=+.087% | 28480 | 1902-0962 |
| A5A1VR2 | 1902-1299 | 6 | 2 | DIODE-ZNR 3.3V 5% PD=1W IR=10UA | 28480 | 1902-1299 |
| A5A1VR3 | 1902-1299 | 6 | | DIODE-ZNR 3.3V 5% PD=1W IR=10UA | 28480 | 1902-1299 |
| A5A2 | 08673-60116 | 0 | 1 | DETECTOR MODULE ASSEMBLY | 28480 | 08673-60116 |
| A5A2C1 | 0160-4082 | 6 | 8 | CAPACITOR-FDTHRU 1000PF 20% 200V CER | 28480 | 0160-4082 |
| A5A2C2 | 0160-4082 | 6 | | CAPACITOR-FDTHRU 1000PF 20% 200V CER | 28480 | 0160-4082 |
| A5A2C3 | 0160-4082 | 6 | | CAPACITOR-FDTHRU 1000PF 20% 200V CER | 28480 | 0160-4082 |
| A5A2C4 | 0160-4082 | 6 | | CAPACITOR-FDTHRU 1000PF 20% 200V CER | 28480 | 0160-4082 |
| A5A2C5 | | | | NOT ASSIGNED | | |
| A5A2C6 | 0160-4083 | 7 | 3 | CAPACITOR-FDTHRU 10PF 10% 200V CER | 28480 | 0160-4083 |
| A5A2C7 | 0160-4082 | 6 | | CAPACITOR-FDTHRU 1000PF 20% 200V CER | 28480 | 0160-4082 |
| A5A2C8 | 0160-4083 | 7 | | CAPACITOR-FDTHRU 10PF 10% 200V CER | 28480 | 0160-4083 |
| A5A2C9 | 0160-4083 | 7 | | CAPACITOR-FDTHRU 10PF 10% 200V CER | 28480 | 0160-4083 |
| A5A2MP1 | 0360-0353 | 0 | 1 | BRACKET-RTANG .406-LG X .343-LG .312-WD | 28480 | 0360-0353 |
| A5A2MP2 | 0520-0127 | 6 | 22 | SCREW-MACH 2-56 .188-IN-LG PAN-HD-POZI | 00000 | ORDER BY DESCRIPTION |
| A5A2MP3 | 0520-0163 | 0 | 4 | SCREW-MACH 2-56 .188-IN-LG 82 DEG | 00000 | ORDER BY DESCRIPTION |
| A5A2MP4 | 2190-0045 | 8 | 22 | WASHER-LK HLCL NO. 2 .088-IN-ID | 28480 | 2190-0045 |
| A5A2MP5 | 2190-0124 | 4 | 4 | WASHER-LK INTL T NO. 10 .195-IN-ID | 28480 | 2190-0124 |
| A5A2MP6 | 2200-0103 | 2 | 9 | SCREW-MACH 4-40 .25-IN-LG PAN-HD-POZI | 28480 | 2200-0103 |
| A5A2MP7 | 2360-0117 | 6 | 12 | SCREW-MACH 6-32 .375-IN-LG PAN-HD-POZI | 00000 | ORDER BY DESCRIPTION |
| A5A2MP8 | 2950-0078 | 9 | 4 | NUT-HEX-DBL-CHAM 10-32-THD .067-IN-THK | 28480 | 2950-0078 |
| A5A2MP9 | 3050-0006 | 6 | 1 | WASHER-SHLDR NO. 10 .2-IN-ID .5-IN-OD | 28480 | 3050-0006 |
| A5A2MP10 | 3050-0062 | 4 | 1 | WASHER-FL MTL NO. 8 .188-IN-ID .438-IN-OD | 28480 | 3050-0062 |
| A5A2MP11 | 08673-00020 | 9 | 1 | COVER-DETECTOR MODULE | 28480 | 08673-00020 |
| A5A2MP12 | 08673-00022 | 1 | 1 | INSULATOR-DETECTOR HOUSING | 28480 | 08673-00022 |
| A5A2MP13 | 08673-00038 | 9 | 1 | COVER-DETECTOR HOUSING (REAR) | 28480 | 08673-00038 |
| A5A2MP14 | 08673-20083 | 6 | 1 | BUSHING | 28480 | 08673-20083 |
| A5A2MP15 | 08673-20082 | 5 | 1 | DETECTOR HOUSING | 28480 | 08673-20082 |
| A5A2MP16 | 0520-0173 | 2 | 1 | SCREW-MACH 2-56 .188-IN-LG PAN-HD-POZI | 00000 | ORDER BY DESCRIPTION |
| A5A2A1 | 08673-60114 | 8 | 1 | ALC BOARD ASSEMBLY | 28480 | 08673-60114 |
| A5A2A1C1 | 0160-0576 | 5 | | CAPACITOR-FXD .1UF +-20% 50VDC CER | 28480 | 0160-0576 |
| A5A2A1C2 | 0180-0491 | 5 | 4 | CAPACITOR-FXD 10UF+-20% 25VDC TA | 28480 | 0180-0491 |
| A5A2A1C3 | 0180-2620 | 6 | 4 | CAPACITOR-FXD 2.2UF+-10% 50VDC TA | 25088 | D2R2GS1B50K |
| A5A2A1C4 | 0180-2620 | 6 | | CAPACITOR-FXD 2.2UF+-10% 50VDC TA | 25088 | D2R2GS1B50K |
| A5A2A1C5 | 0160-3454 | 4 | 1 | CAPACITOR-FXD 220PF +-10% 1KVDC CER | 28480 | 0160-3454 |
| A5A2A1C6 | 0160-3879 | 7 | 15 | CAPACITOR-FXD .01UF +-20% 100VDC CER | 28480 | 0160-3879 |
| A5A2A1C7 | 0160-2209 | 5 | 1 | CAPACITOR-FXD 360PF +-5% 300VDC MICA | 28480 | 0160-2209 |
| A5A2A1C8 | 0160-3879 | 7 | | CAPACITOR-FXD .01UF +-20% 100VDC CER | 28480 | 0160-3879 |
| A5A2A1C9 | 0160-0161 | 4 | 2 | CAPACITOR-FXD .01UF +-10% 200VDC POLYE | 28480 | 0160-0161 |
| A5A2A1C10 | 0160-3879 | 7 | | CAPACITOR-FXD .01UF +-20% 100VDC CER | 28480 | 0160-3879 |
| A5A2A1C11 | 0160-3879 | 7 | | CAPACITOR-FXD .01UF +-20% 100VDC CER | 28480 | 0160-3879 |
| A5A2A1C12 | 0160-0163 | 6 | 1 | CAPACITOR-FXD .033UF +-10% 200VDC POLYE | 28480 | 0160-0163 |
| A5A2A1C13 | 0160-0576 | 5 | | CAPACITOR-FXD .1UF +-20% 50VDC CER | 28480 | 0160-0576 |
| A5A2A1C14 | 0160-0576 | 5 | | CAPACITOR-FXD .1UF +-20% 50VDC CER | 28480 | 0160-0576 |
| A5A2A1C15 | 0160-0573 | 2 | 3 | CAPACITOR-FXD 4700PF +-20% 100VDC CER | 28480 | 0160-0573 |

A5

See introduction to this section for ordering information
*Indicates factory selected value
†Backdating information in Section VII



www.valuetronics.com

Table 6-3. Replaceable Parts

| Reference Designation | HP Part Number | C D | Qty | Description | Mfr Code | Mfr Part Number |
|---|---|---|---|---|---|---|
| A5A2A1C16 | 0160-0573 | 2 | | CAPACITOR-FXD 4700PF +-20% 100VDC CER | 28480 | 0160-0573 |
| A5A2A1C17 | 0160-0127 | 2 | 2 | CAPACITOR-FXD 1UF +-20% 25VDC CER | 28480 | 0160-0127 |
| A5A2A1C18 | 0160-4764 | 1 | 1 | CAPACITOR-FXD 150PF +-5% 100VDC CER | 28480 | 0160-4764 |
| A5A2A1C19 | 0160-0574 | 3 | 2 | CAPACITOR-FXD .022UF +-20% 100VDC CER | 28480 | 0160-0574 |
| A5A2A1C20 | 0160-3879 | 7 | | CAPACITOR-FXD .01UF +-20% 100VDC CER | 28480 | 0160-3879 |
| A5A2A1CR1 | 1901-0040 | 1 | 4 | DIODE-SWITCHING 30V 50MA 2NS DO-35 | 28480 | 1901-0040 |
| A5A2A1CR2 | 1901-0040 | 1 | | DIODE-SWITCHING 30V 50MA 2NS DO-35 | 28480 | 1901-0040 |
| A5A2A1CR3 | 1901-0040 | 1 | | DIODE-SWITCHING 30V 50MA 2NS DO-35 | 28480 | 1901-0040 |
| A5A2A1CR4 | 1901-0040 | 1 | | DIODE-SWITCHING 30V 50MA 2NS DO-35 | 28480 | 1901-0040 |
| A5A2A1J1 | 1250-1255 | 1 | 1 | CONNECTOR-RF SMB M PC 50-OHM | 28480 | 1250-1255 |
| A5A2A1L1 | 9140-0144 | 0 | 6 | INDUCTOR RF-CH-MLD 4.7UH 10% .105DX.26LG | 28480 | 9140-0144 |
| A5A2A1L2 | 9140-0144 | 0 | | INDUCTOR RF-CH-MLD 4.7UH 10% .105DX.26LG | 28480 | 9140-0144 |
| A5A2A1L3 | 9140-0144 | 0 | | INDUCTOR RF-CH-MLD 4.7UH 10% .105DX.26LG | 28480 | 9140-0144 |
| A5A2A1MP1 | 1480-0073 | 6 | 8 | PIN-ROLL .062-IN-DIA .25-IN-LG BE-CU | 28480 | 1480-0073 |
| A5A2A1MP2 | 4040-0750 | 7 | 1 | EXTR-PC BD RED POLYC .062-BD-THKNS | 28480 | 4040-0750 |
| A5A2A1Q1 | 1855-0278 | 6 | 3 | TRANSISTOR J-FET 2N4416A N-CHAN D-MODE | 01295 | 2N4416A |
| A5A2A1Q2 | 1855-0253 | 9 | 4 | TRANSISTOR J-FET N-CHAN D-MODE TO-92 SI | 28480 | 1855-0253 |
| A5A2A1Q3 | 1855-0278 | 6 | | TRANSISTOR J-FET 2N4416A N-CHAN D-MODE | 01295 | 2N4416A |
| A5A2A1Q4 | 1854-0477 | 7 | 2 | TRANSISTOR NPN 2N2222A SI TO-18 PD=500MW | 04713 | 2N2222A |
| A5A2A1Q5 | 1853-0322 | 9 | 4 | TRANSISTOR PNP 2N2946A SI TO-46 PD=400MW | 01295 | 2N2946A |
| A5A2A1Q6 | 1855-0278 | 6 | | TRANSISTOR J-FET 2N4416A N-CHAN D-MODE | 01295 | 2N4416A |
| A5A2A1Q7 | 1853-0316 | 1 | 2 | TRANSISTOR-DUAL PNP PD=500MW | 28480 | 1853-0316 |
| A5A2A1Q8 | 1854-0477 | 7 | | TRANSISTOR NPN 2N2222A SI TO-18 PD=500MW | 04713 | 2N2222A |
| A5A2A1Q9 | 1854-0810 | 2 | | TRANSISTOR NPN SI PD=625MW FT=200MHZ | 28480 | 1854-0810 |
| A5A2A1Q10 | 1853-0529 | 8 | 1 | TRANSISTOR-DUAL PNP PD=2.5W | 28480 | 1853-0529 |
| A5A2A1Q11 | 1853-0459 | 3 | | TRANSISTOR PNP SI PD=625MW FT=200MHZ | 28480 | 1853-0459 |
| A5A2A1Q12 | 1854-0810 | 2 | | TRANSISTOR NPN SI PD=625MW FT=200MHZ | 28480 | 1854-0810 |
| A5A2A1Q13 | 1855-0253 | 9 | | TRANSISTOR J-FET N-CHAN D-MODE TO-92 SI | 28480 | 1855-0253 |
| A5A2A1Q14 | 1854-0810 | 2 | | TRANSISTOR NPN SI PD=625MW FT=200MHZ | 28480 | 1854-0810 |
| A5A2A1Q15 | 1855-0251 | 7 | 1 | TRANSISTOR MOSFET N-CHAN E-MODE TO-39 SI | 28480 | 1855-0251 |
| A5A2A1Q16 | 1853-0322 | 9 | | TRANSISTOR PNP 2N2946A SI TO-46 PD=400MW | 01295 | 2N2946A |
| A5A2A1R1 | 2100-3273 | 1 | 1 | RESISTOR-TRMR 2K 10% C SIDE-ADJ 1-TRN | 28480 | 2100-3273 |
| A5A2A1R2 | 0698-7576 | 8 | 2 | RESISTOR 217 .1% .125W F TC=0+-25 | 19701 | MF4C1/8-T9-217R-B |
| A5A2A1R3 | 0757-0409 | 8 | 1 | RESISTOR 274 1% .125W F TC=0+-100 | 24546 | C4-1/8-T0-274R-F |
| A5A2A1R4 | 0698-7280 | 1 | 6 | RESISTOR 68.1K 1% .05W F TC=0+-100 | 24546 | C3-1/8-T0-6812-F |
| A5A2A1R5 | 0698-7280 | 1 | | RESISTOR 68.1K 1% .05W F TC=0+-100 | 24546 | C3-1/8-T0-6812-F |
| A5A2A1R6 | 0698-7280 | 1 | | RESISTOR 68.1K 1% .05W F TC=0+-100 | 24546 | C3-1/8-T0-6812-F |
| A5A2A1R7 | 0698-5383 | 1 | 1 | RESISTOR 11.5K 1% .125W F TC=0+-25 | 28480 | 0698-5383 |
| A5A2A1R8 | 0698-7243 | 6 | 8 | RESISTOR 1.96K 1% .05W F TC=0+-100 | 24546 | C3-1/8-T0-1961-F |
| A5A2A1R9 | 0698-7222 | 1 | 4 | RESISTOR 261 1% .05W F TC=0+-100 | 24546 | C3-1/8-T0-261R-F |
| A5A2A1R10 | 0698-7280 | 1 | | RESISTOR 68.1K 1% .05W F TC=0+-100 | 24546 | C3-1/8-T0-6812-F |
| A5A2A1R11 | 0698-7280 | 1 | | RESISTOR 68.1K 1% .05W F TC=0+-100 | 24546 | C3-1/8-T0-6812-F |
| A5A2A1R12 | 0698-7260 | 7 | 16 | RESISTOR 10K 1% .05W F TC=0+-100 | 24546 | C3-1/8-T0-1002-F |
| A5A2A1R13 | 0698-7277 | 6 | 11 | RESISTOR 51.1K 1% .05W F TC=0+-100 | 24546 | C3-1/8-T0-5112-F |
| A5A2A1R14 | 0698-7260 | 7 | | RESISTOR 10K 1% .05W F TC=0+-100 | 24546 | C3-1/8-T0-1002-F |
| A5A2A1R15 | 0699-0784 | 8 | 1 | RESISTOR 17.55K .1% .1W F TC=0+-15 | 28480 | 0699-0784 |
| A5A2A1R16 | 0698-7576 | 8 | | RESISTOR 217 .1% .125W F TC=0+-25 | 19701 | MF4C1/8-T9-217R-B |
| A5A2A1R17 | 0699-0994 | 2 | 1 | RESISTOR-28.544K .1% .125W F TC=0+-25PPM | 28480 | 0699-0994 |
| A5A2A1R18 | 0699-0096 | 5 | 1 | RESISTOR 12K .1% .1W F TC=0+-10 | 28480 | 0699-0096 |
| A5A2A1R19 | 0699-0993 | 1 | 1 | RESISTOR 46.4K .1% .125W F TC=0+-25PPM | 28480 | 0699-0993 |
| A5A2A1R20 | 0699-0992 | 0 | 1 | RESISTOR-227.2 .1% .125W F TC=0+-25PPM | 28480 | 0699-0992 |
| A5A2A1R21 | 0699-0991 | 9 | 1 | RESISTOR-4.452K .1% .125W F TC=0+-25PPM | 28480 | 0699-0991 |
| A5A2A1R22 | 0698-7277 | 6 | | RESISTOR 51.1K 1% .05W F TC=0+-100 | 24546 | C3-1/8-T0-5112-F |
| A5A2A1R23 | 0698-7260 | 7 | | RESISTOR 10K 1% .05W F TC=0+-100 | 24546 | C3-1/8-T0-1002-F |
| A5A2A1R24 | | | | NOT ASSIGNED | | |
| A5A2A1R25 | 0698-7234 | 5 | 1 | RESISTOR 825 1% .05W F TC=0+-100 | 24546 | C3-1/8-T0-825R-F |
| A5A2A1R26 | 0698-6329 | 7 | 2 | RESISTOR 845 1% .125W F TC=0+-25 | 28480 | 0698-6329 |
| A5A2A1R27 | 0698-7227 | 6 | 1 | RESISTOR 422 1% .05W F TC=0+-100 | 24546 | C3-1/8-T0-422R-F |
| A5A2A1R28 | 0698-7272 | 1 | 3 | RESISTOR 31.6K 1% .05W F TC=0+-100 | 24546 | C3-1/8-T0-3162-F |
| A5A2A1R29 | 0698-8827 | 4 | 2 | RESISTOR 1M 1% .125W F TC=0+-100 | 28480 | 0698-8827 |
| A5A2A1R30 | 2100-3353 | 8 | 4 | RESISTOR-TRMR 20K 10% C SIDE-ADJ 1-TRN | 28480 | 2100-3353 |

A5

See introduction to this section for ordering information
*Indicates factory selected value
†Backdating information in Section VII



www.valuetronics.com

Table 6-3. Replaceable Parts

| Reference Designation | HP Part Number | CD | Qty | Description | Mfr Code | Mfr Part Number |
|---|---|---|---|---|---|---|
| A5A2A1R31 | 0698-7284 | 5 | 4 | RESISTOR 100K 1% .05W F TC=0+-100 | 24546 | C3-1/8-T0-1003-F |
| A5A2A1R32 | 0698-7284 | 5 | | RESISTOR 100K 1% .05W F TC=0+-100 | 24546 | C3-1/8-T0-1003-F |
| A5A2A1R33 | 0698-7243 | 6 | | RESISTOR 1.96K 1% .05W F TC=0+-100 | 24546 | C3-1/8-T0-1961-F |
| A5A2A1R34 | 0698-7277 | 6 | | RESISTOR 51.1K 1% .05W F TC=0+-100 | 24546 | C3-1/8-T0-5112-F |
| A5A2A1R35 | 0757-0274 | 5 | 4 | RESISTOR 1.21K 1% .125W F TC=0+-100 | 24546 | C4-1/8-T0-1211-F |
| A5A2A1R36 | 0757-0436 | 3 | 16 | RESISTOR 5.11K 1% .125W F TC=0+-100 | 24546 | C4-1/8-T0-5111-F |
| A5A2A1R37 | 0698-7196 | 0 | 2 | RESISTOR 26.1 1% .05W F TC=0+-100 | 24546 | C3-1/8-T0-26R1-F |
| A5A2A1R38 | 0698-7212 | 9 | 13 | RESISTOR 100 1% .05W F TC=0+-100 | 24546 | C3-1/8-T0-100R-F |
| A5A2A1R39 | 0698-7212 | 9 | | RESISTOR 100 1% .05W F TC=0+-100 | 24546 | C3-1/8-T0-100R-F |
| A5A2A1R40 | 0698-7243 | 6 | | RESISTOR 1.96K 1% .05W F TC=0+-100 | 24546 | C3-1/8-T0-1961-F |
| A5A2A1R41 | 0698-7261 | 8 | 2 | RESISTOR 11K 1% .05W F TC=0+-100 | 24546 | C3-1/8-T0-1102-F |
| A5A2A1R42 | 0698-7188 | 8 | 8 | RESISTOR 10 1% .05W F TC=0+-100 | 24546 | C3-1/8-T0-10R-F |
| A5A2A1R43 | 0698-7188 | 8 | | RESISTOR 10 1% .05W F TC=0+-100 | 24546 | C3-1/8-T0-10R-F |
| A5A2A1R44 | 0698-7224 | 3 | 1 | RESISTOR 316 1% .05W F TC=0+-100 | 24546 | C3-1/8-T0-318R-F |
| A5A2A1R45 | 0757-0280 | 3 | | RESISTOR 1K 1% .125W F TC=0+-100 | 24546 | C4-1/8-T0-1001-F |
| A5A2A1R46 | 0757-0280 | 3 | | RESISTOR 1K 1% .125W F TC=0+-100 | 24546 | C4-1/8-T0-1001-F |
| A5A2A1R47 | 0698-7260 | 7 | | RESISTOR 10K 1% .05W F TC=0+-100 | 24546 | C3-1/8-T0-1002-F |
| A5A2A1R48 | 0698-7212 | 9 | | RESISTOR 100 1% .05W F TC=0+-100 | 24546 | C3-1/8-T0-100R-F |
| A5A2A1R49 | 0698-7212 | 9 | | RESISTOR 100 1% .05W F TC=0+-100 | 24546 | C3-1/8-T0-100R-F |
| A5A2A1R50 | 0698-3459 | 8 | 1 | RESISTOR 383K 1% .125W F TC=0+-100 | 28480 | 0698-3459 |
| A5A2A1R51 | 0698-7236 | 7 | 2 | RESISTOR 1K 1% .05W F TC=0+-100 | 24546 | C3-1/8-T0-1001-F |
| A5A2A1R52 | 0698-7260 | 7 | | RESISTOR 10K 1% .05W F TC=0+-100 | 24546 | C3-1/8-T0-1002-F |
| A5A2A1R53 | 0698-7243 | 6 | | RESISTOR 1.96K 1% .05W F TC=0+-100 | 24546 | C3-1/8-T0-1961-F |
| A5A2A1R54 | 0698-7212 | 9 | | RESISTOR 100 1% .05W F TC=0+-100 | 24546 | C3-1/8-T0-100R-F |
| A5A2A1R55 | 0757-0290 | 5 | 4 | RESISTOR 6.19K 1% .125W F TC=0+-100 | 19701 | MF4C1/8-T0-6191-F |
| A5A2A1R56 | 0698-7260 | 7 | | RESISTOR 10K 1% .05W F TC=0+-100 | 24546 | C3-1/8-T0-1002-F |
| A5A2A1R57 | 2100-3353 | 8 | | RESISTOR-TRMR 20K 10% C SIDE-ADJ 1-TRN | 28480 | 2100-3353 |
| A5A2A1R58 | 2100-3353 | 8 | | RESISTOR-TRMR 20K 10% C SIDE-ADJ 1-TRN | 28480 | 2100-3353 |
| A5A2A1R59 | 2100-3274 | 2 | 5 | RESISTOR-TRMR 10K 10% C SIDE-ADJ 1-TRN | 28480 | 2100-3274 |
| A5A2A1R60 | 0698-7243 | 6 | | RESISTOR 1.96K 1% .05W F TC=0+-100 | 24546 | C3-1/8-T0-1961-F |
| A5A2A1R61 | 2100-3274 | 2 | | RESISTOR-TRMR 10K 10% C SIDE-ADJ 1-TRN | 28480 | 2100-3274 |
| A5A2A1R62 | 0698-7272 | 1 | | RESISTOR 31.6K 1% .05W F TC=0+-100 | 24546 | C3-1/8-T0-3162-F |
| A5A2A1R63 | 0698-7270 | 9 | 3 | RESISTOR 26.1K 1% .05W F TC=0+-100 | 24546 | C3-1/8-T0-2612-F |
| A5A2A1R64 | 0698-7267 | 4 | 1 | RESISTOR 19.6K 1% .05W F TC=0+-100 | 24546 | C3-1/8-T0-1962-F |
| A5A2A1R65 | 0698-7265 | 2 | 1 | RESISTOR 16.2K 1% .05W F TC=0+-100 | 24546 | C3-1/8-T0-1622-F |
| A5A2A1R66 | 0698-7282 | 3 | 1 | RESISTOR 82.5K 1% .05W F TC=0+-100 | 24546 | C3-1/8-T0-8252-F |
| A5A2A1R67 | 0698-7277 | 6 | | RESISTOR 51.1K 1% .05W F TC=0+-100 | 24546 | C3-1/8-T0-5112-F |
| A5A2A1R68 | 0698-7277 | 6 | | RESISTOR 51.1K 1% .05W F TC=0+-100 | 24546 | C3-1/8-T0-5112-F |
| A5A2A1R69 | 0698-7280 | 1 | | RESISTOR 68.1K 1% .05W F TC=0+-100 | 24546 | C3-1/8-T0-6812-F |
| A5A2A1R70 | 0757-0180 | 2 | 1 | RESISTOR 31.6 1% .125W F TC=0+-100 | 28480 | 0757-0180 |
| A5A2A1R71 | 0698-7222 | 1 | | RESISTOR 261 1% .05W F TC=0+-100 | 24546 | C3-1/8-T0-261R-F |
| A5A2A1R72 | 0698-7188 | 8 | | RESISTOR 10 1% .05W F TC=0+-100 | 24546 | C3-1/8-T0-10R-F |
| A5A2A1R73 | 0757-0346 | 2 | | RESISTOR 10 1% .125W F TC=0+-100 | 24546 | C4-1/8-T0-10R0-F |
| A5A2A1R74 | 0698-7252 | 7 | 2 | RESISTOR 4.64K 1% .05W F TC=0+-100 | 24546 | C3-1/8-T0-4641-F |
| A5A2A1R75 | 0698-7243 | 6 | | RESISTOR 1.96K 1% .05W F TC=0+-100 | 24546 | C3-1/8-T0-1961-F |
| A5A2A1R76 | 0698-7260 | 7 | | RESISTOR 10K 1% .05W F TC=0+-100 | 24546 | C3-1/8-T0-1002-F |
| A5A2A1RT1 | 0837-0232 | 5 | 1 | THERMISTOR-POS. TEMP. COEEF. 2.00kà25C | 28480 | 0837-0232 |
| A5A2A1TP1 | 0360-0535 | 0 | 49 | TERMINAL TEST POINT PCB | 00000 | ORDER BY DESCRIPTION |
| A5A2A1TP2 | 0360-0535 | 0 | | TERMINAL TEST POINT PCB | 00000 | ORDER BY DESCRIPTION |
| A5A2A1TP3 | 0360-0535 | 0 | | TERMINAL TEST POINT PCB | 00000 | ORDER BY DESCRIPTION |
| A5A2A1TP4 | 0360-0535 | 0 | | TERMINAL TEST POINT PCB | 00000 | ORDER BY DESCRIPTION |
| A5A2A1TP5 | 0360-0535 | 0 | | TERMINAL TEST POINT PCB | 00000 | ORDER BY DESCRIPTION |
| A5A2A1U1 | 1826-0601 | 0 | 2 | IC OP AMP PRCN TO-99 PKG | 06665 | OP-16FJ |
| A5A2A1U2 | 1826-0486 | 9 | 1 | IC MULTIPLXR 4-CHAN-ANLG DUAL 16-DIP-P | 04713 | MC14052BCP |
| A5A2A1U3 | 1826-0488 | 1 | 1 | IC OP AMP WB TO-99 PKG | 27014 | LM218H |
| A5A2A1U4 | 1826-0601 | 0 | | IC OP AMP PRCN TO-99 PKG | 06665 | OP-16FJ |
| A5A2A1U5 | 1826-0720 | 4 | 1 | IC SWITCH ANLG QUAD 16-DIP-C PKG | 06665 | SW-02FQ |
| A5A2A1VR1 | 1902-0951 | 5 | 3 | DIODE-ZNR 5.1V 5% DO-35 PD=.4W TC=+.035% | 28480 | 1902-0951 |
| A5A2A2 | 08673-60031 | 8 | 1 | DETECTOR BOARD ASSEMBLY | 28480 | 08673-60031 |
| A5A2A2C1 | 0180-2661 | 5 | 7 | CAPACITOR-FXD 1UF+-10% 50VDC TA | 25088 | D1R0G51A50K |
| A5A2A2C2 | 0160-3879 | 7 | | CAPACITOR-FXD .01UF +-20% 100VDC CER | 28480 | 0160-3879 |
| A5A2A2C3 | 0180-2731 | 0 | 1 | CAPACITOR-FXD 2.2UF+-10% 20VDC TA | 28480 | 0180-2731 |
| A5A2A2C4 | 0160-3879 | 7 | | CAPACITOR-FXD .01UF +-20% 100VDC CER | 28480 | 0160-3879 |
| A5A2A2C5 | 0160-3879 | 7 | | CAPACITOR-FXD .01UF +-20% 100VDC CER | 28480 | 0160-3879 |

See introduction to this section for ordering information
*Indicates factory selected value
†Backdating information in Section VII



www.valuetronics.com

Table 6-3. Replaceable Parts

| Reference Designation | HP Part Number | CD | Qty | Description | Mfr Code | Mfr Part Number |
|---|---|---|---|---|---|---|
| A5A2A2C6 | 0160-3879 | 7 | | CAPACITOR-FXD .01UF +-20% 100VDC CER | 28480 | 0160-3879 |
| A5A2A2C7 | 0160-3879 | 7 | | CAPACITOR-FXD .01UF +-20% 100VDC CER | 28480 | 0160-3879 |
| A5A2A2C8 | 0180-2681 | 5 | | CAPACITOR-FXD 1UF+-10% 50VDC TA | 25088 | D1R0GS1A50K |
| A5A2A2C9 | 0160-2244 | 8 | 1 | CAPACITOR-FXD 3PF +-.25PF 500VDC CER | 28480 | 0160-2244 |
| A5A2A2C10 | 0160-0174 | 9 | 6 | CAPACITOR-FXD .47UF +80-20% 25VDC CER | 28480 | 0160-0174 |
| A5A2A2C11 | 0160-0576 | 5 | | CAPACITOR-FXD .1UF +-20% 50VDC CER | 28480 | 0160-0576 |
| A5A2A2C12 | 0160-3877 | 5 | 2 | CAPACITOR-FXD 100PF +-20% 200VDC CER | 28480 | 0160-3877 |
| A5A2A2C13 | 0160-2256 | 2 | 1 | CAPACITOR-FXD 9.1PF +-.25PF 500VDC CER | 28480 | 0160-2256 |
| A5A2A2C14 | 0160-2250 | 6 | 2 | CAPACITOR-FXD 5.1PF +-.25PF 500VDC CER | 28480 | 0160-2250 |
| A5A2A2C15 | 0160-2250 | 6 | | CAPACITOR-FXD 5.1PF +-.25PF 500VDC CER | 28480 | 0160-2250 |
| A5A2A2CR1 | 1901-0539 | 3 | 23 | DIODE-SM SIG SCHOTTKY | 28480 | 1901-0539 |
| A5A2A2CR2 | 1901-0050 | 3 | | DIODE-SWITCHING 80V 200MA 2NS DO-35 | 28480 | 1901-0050 |
| A5A2A2CR3 | 1901-0050 | 3 | | DIODE-SWITCHING 80V 200MA 2NS DO-35 | 28480 | 1901-0050 |
| A5A2A2E1 | 9170-0962 | 3 | 5 | CORE-SHIELDING BEAD | 28480 | 9170-0962 |
| A5A2A2E2 | 9170-0962 | 3 | | CORE-SHIELDING BEAD | 28480 | 9170-0962 |
| A5A2A2E3 | 9170-0962 | 3 | | CORE-SHIELDING BEAD | 28480 | 9170-0962 |
| A5A2A2E4 | 9170-0962 | 3 | | CORE-SHIELDING BEAD | 28480 | 9170-0962 |
| A5A2A2E5 | 9170-0962 | 3 | | CORE-SHIELDING BEAD | 28480 | 9170-0962 |
| A5A2A2J1 | 1250-1220 | 0 | 1 | CONNECTOR-RF SMC M PC 50-OHM | 28480 | 1250-1220 |
| A5A2A2Q1 | 1853-0459 | 3 | | TRANSISTOR PNP SI PD=625MW FT=200MHZ | 28480 | 1853-0459 |
| A5A2A2Q2 | 1854-0345 | 8 | 3 | TRANSISTOR NPN 2N5179 SI TO-72 PD=200MW | 04713 | 2N5179 |
| A5A2A2Q3 | 1855-0268 | 6 | 2 | TRANSISTOR J-FET N-CHAN D-MODE TO-92 SI | 17856 | J309 |
| A5A2A2Q4 | 1855-0268 | 6 | | TRANSISTOR J-FET N-CHAN D-MODE TO-92 SI | 17856 | J309 |
| A5A2A2Q5 | 1854-0345 | 8 | | TRANSISTOR NPN 2N5179 SI TO-72 PD=200MW | 04713 | 2N5179 |
| A5A2A2Q6 | 1854-0345 | 8 | | TRANSISTOR NPN 2N5179 SI TO-72 PD=200MW | 04713 | 2N5179 |
| A5A2A2Q7 | 1853-0405 | 9 | 9 | TRANSISTOR PNP SI PD=300MW FT=850MHZ | 04713 | 2N4209 |
| A5A2A2Q8 | 1853-0075 | 9 | 1 | TRANSISTOR-DUAL PNP PD=400MW | 28480 | 1853-0075 |
| A5A2A2Q9 | 1854-0475 | 5 | 2 | TRANSISTOR-DUAL NPN PD=750MW | 28480 | 1854-0475 |
| A5A2A2Q10 | 1853-0451 | 5 | 2 | TRANSISTOR PNP 2N3799 SI TO-18 PD=360MW | 01295 | 2N3799 |
| A5A2A2Q11 | 1853-0451 | 5 | | TRANSISTOR PNP 2N3799 SI TO-18 PD=360MW | 01295 | 2N3799 |
| A5A2A2Q12 | 1854-0810 | 2 | | TRANSISTOR NPN SI PD=625MW FT=200MHZ | 28480 | 1854-0810 |
| A5A2A2Q13 | 1854-0295 | 7 | 1 | TRANSISTOR-DUAL NPN PD=400MW | 28480 | 1854-0295 |
| A5A2A2R1 | 0811-3591 | 1 | 2 | RESISTOR-0.2+-0.5% 1W WW F TC=+-90PPM/C | 28480 | 0811-3591 |
| A5A2A2R2 | 0698-7188 | 8 | | RESISTOR 10 1% .05W F TC=0+-100 | 24546 | C3-1/8-T0-10R-F |
| A5A2A2R3 | 0698-7188 | 8 | | RESISTOR 10 1% .05W F TC=0+-100 | 24546 | C3-1/8-T0-10R-F |
| A5A2A2R4 | 0698-7188 | 0 | | RESISTOR 26.1 1% .05W F TC=0+-100 | 24546 | C3-1/8-T0-26R1-F |
| A5A2A2R5 | 0698-7188 | 8 | | RESISTOR 10 1% .05W F TC=0+-100 | 24546 | C3-1/8-T0-10R-F |
| A5A2A2R6 | 0698-7188 | 8 | | RESISTOR 10 1% .05W F TC=0+-100 | 24546 | C3-1/8-T0-10R-F |
| A5A2A2R7 | 0698-7260 | 7 | | RESISTOR 10K 1% .05W F TC=0+-100 | 24546 | C3-1/8-T0-1002-F |
| A5A2A2R8 | 0698-7212 | 9 | | RESISTOR 100 1% .05W F TC=0+-100 | 24546 | C3-1/8-T0-100R-F |
| A5A2A2R9 | 0698-7260 | 7 | | RESISTOR 10K 1% .05W F TC=0+-100 | 24546 | C3-1/8-T0-1002-F |
| A5A2A2R10 | 0757-0419 | 0 | 4 | RESISTOR 681 1% .125W F TC=0+-100 | 24546 | C4-1/8-T0-681R-F |
| A5A2A2R11 | 0698-7244 | 7 | 7 | RESISTOR 2.15K 1% .05W F TC=0+-100 | 24546 | C3-1/8-T0-2151-F |
| A5A2A2R12 | 2100-2039 | 5 | 2 | RESISTOR-TRMR 20K 5% WW SIDE-ADJ 10-TRN | 28480 | 2100-2039 |
| A5A2A2R13 | 0698-7212 | 9 | | RESISTOR 100 1% .05W F TC=0+-100 | 24546 | C3-1/8-T0-100R-F |
| A5A2A2R14 | 0698-7244 | 7 | | RESISTOR 2.15K 1% .05W F TC=0+-100 | 24546 | C3-1/8-T0-2151-F |
| A5A2A2R15 | 0698-7244 | 7 | | RESISTOR 2.15K 1% .05W F TC=0+-100 | 24546 | C3-1/8-T0-2151-F |
| A5A2A2R16 | 0698-7202 | 7 | 1 | RESISTOR 38.3 1% .05W F TC=0+-100 | 24546 | C3-1/8-T0-38R3-F |
| A5A2A2R17 | 0698-7244 | 7 | | RESISTOR 2.15K 1% .05W F TC=0+-100 | 24546 | C3-1/8-T0-2151-F |
| A5A2A2R18 | 0698-7244 | 7 | | RESISTOR 2.15K 1% .05W F TC=0+-100 | 24546 | C3-1/8-T0-2151-F |
| A5A2A2R19 | 0698-7244 | 7 | | RESISTOR 2.15K 1% .05W F TC=0+-100 | 24546 | C3-1/8-T0-2151-F |
| A5A2A2R20 | 0698-7243 | 6 | | RESISTOR 1.96K 1% .05W F TC=0+-100 | 24546 | C3-1/8-T0-1961-F |
| A5A2A2R21 | 2100-0545 | 4 | 2 | RESISTOR-TRMR 1K 10% C SIDE-ADJ 17-TRN | 32997 | 3292X-1-102 |
| A5A2A2R22 | 0698-7272 | 1 | | RESISTOR 31.6K 1% .05W F TC=0+-100 | 24546 | C3-1/8-T0-3162-F |
| A5A2A2R23 | 0698-7229 | 8 | 1 | RESISTOR 511 1% .05W F TC=0+-100 | 24546 | C3-1/8-T0-511R-F |
| A5A2A2R24 | 0698-7203 | 8 | 1 | RESISTOR 42.2 1% .05W F TC=0+-100 | 24546 | C3-1/8-T0-42R2-F |
| A5A2A2R25 | 0698-7236 | 7 | | RESISTOR 1K 1% .05W F TC=0+-100 | 24546 | C3-1/8-T0-1001-F |
| A5A2A2R26 | 2100-3751 | 0 | 1 | RESISTOR-TRMR 10 10% C SIDE-ADJ 17-TRN | 28480 | 2100-3751 |
| A5A2A2R27 | 0698-0068 | 1 | 1 | RESISTOR 1.47M 1% .125W F TC=0+-100 | 28480 | 0698-0068 |
| A5A2A2R28 | 0811-2031 | 2 | 1 | RESISTOR 815 3% .25W PWW TC=+5900+-300 | 20940 | 143-1/4-815R-3 |
| A5A2A2R29 | 2100-1922 | 3 | 1 | RESISTOR-TRMR 5K 10% C SIDE-ADJ 22-TRN | 32997 | 3059Y-1-502 |
| A5A2A2R30 | 0698-7275 | 4 | 1 | RESISTOR 42.2K 1% .05W F TC=0+-100 | 24546 | C3-1/8-T0-4222-F |

A5

See introduction to this section for ordering information
*Indicates factory selected value
†Backdating information in Section VII



www.valuetronics.com

Table 6-3. Replaceable Parts

| Reference Designation | HP Part Number | C D | Qty | Description | Mfr Code | Mfr Part Number |
|---|---|---|---|---|---|---|
| A5A2A2R31 | 0698-7279 | 8 | 1 | RESISTOR 61.9K 1% .05W F TC=0+-100 | 24546 | C3-1/8-T0-6192-F |
| A5A2A2R32 | 0698-6320 | 8 | 2 | RESISTOR 5K .1% .125W F TC=0+-25 | 03888 | PME55-1/8-T9-5001-B |
| A5A2A2R33 | 0698-7253 | 8 | 2 | RESISTOR 5.11K 1% .05W F TC=0+-100 | 24546 | C3-1/8-T0-5111-F |
| A5A2A2R34 | 0698-7216 | 3 | 1 | RESISTOR 147 1% .05W F TC=0+-100 | 24546 | C3-1/8-T0-147R-F |
| A5A2A2R35 | 0757-0317 | 7 | 8 | RESISTOR 1.33K 1% .125W F TC=0+-100 | 24546 | C4-1/8-T0-1331-F |
| A5A2A2R36 | 0698-7249 | 2 | 1 | RESISTOR 3.48K 1% .05W F TC=0+-100 | 24546 | C3-1/8-T0-3481-F |
| A5A2A2R37 | 0698-7253 | 8 | | RESISTOR 5.11K 1% .05W F TC=0+-100 | 24546 | C3-1/8-T0-5111-F |
| A5A2A2R38 | 0698-7248 | 1 | 1 | RESISTOR 3.16K 1% .05W F TC=0+-100 | 24546 | C3-1/8-T0-3161-F |
| A5A2A2R39 | 0699-0140 | 0 | 1 | RESISTOR 524 .1% .1W F TC=0+-15 | 28480 | 0699-0140 |
| A5A2A2R40 | 2100-0545 | 4 | | RESISTOR-TRMR 1K 10% C SIDE-ADJ 17-TRN | 32997 | 3292X-1-102 |
| A5A2A2R41 | 0698-8779 | 5 | 1 | RESISTOR 280 .1% .1W F TC=0+-5 | 28480 | 0698-8779 |
| A5A2A2R42 | 0698-6320 | 8 | | RESISTOR 5K .1% .125W F TC=0+-25 | 03888 | PME55-1/8-T9-5001-B |
| A5A2A2R43 | 0698-6329 | 7 | | RESISTOR 845 1% .125W F TC=0+-25 | 28480 | 0698-6329 |
| A5A2A2R44 | 0757-0274 | 5 | | RESISTOR 1.21K 1% .125W F TC=0+-100 | 24546 | C4-1/8-T0-1211-F |
| A5A2A2RT1 | 0837-0124 | 4 | 1 | THERMISTOR DISC 250-OHM TC=-4.4%/C-DEG | 28480 | 0837-0124 |
| A5A2A2TP1 | 0360-0535 | 0 | | TERMINAL TEST POINT PCB | 00000 | ORDER BY DESCRIPTION |
| A5A2A2TP2 | 0360-0535 | 0 | | TERMINAL TEST POINT PCB | 00000 | ORDER BY DESCRIPTION |
| A5A2A2U1 | 1826-0471 | 2 | 2 | IC OP AMP LOW-DRIFT TO-99 PKG | 28480 | 1826-0471 |
| A5A3 | 08673-60112 | 6 | 1 | FUNCTION BOARD ASSEMBLY | 28480 | 08673-60112 |
| A5A3C1 | 0180-0374 | 3 | 9 | CAPACITOR-FXD 10UF+-10% 20VDC TA | 56289 | 150D106X9020B2 |
| A5A3C2 | 0160-0570 | 9 | 3 | CAPACITOR-FXD 220PF +-20% 100VDC CER | 20932 | 5024EM100RD221M |
| A5A3C3 | 0180-0197 | 8 | | CAPACITOR-FXD 2.2UF+-10% 20VDC TA | 56289 | 150D225X9020A2 |
| A5A3C4 | 0180-0291 | 3 | | CAPACITOR-FXD 1UF+-10% 35VDC TA | 56289 | 150D105X9035A2 |
| A5A3C5 | 0180-0197 | 8 | | CAPACITOR-FXD 2.2UF+-10% 20VDC TA | 56289 | 150D225X9020A2 |
| A5A3C6 | 0160-0576 | 5 | | CAPACITOR-FXD .1UF +-20% 50VDC CER | 28480 | 0160-0576 |
| A5A3C7 | 0160-0576 | 5 | | CAPACITOR-FXD .1UF +-20% 50VDC CER | 28480 | 0160-0576 |
| A5A3C8 | 0160-0576 | 5 | | CAPACITOR-FXD .1UF +-20% 50VDC CER | 28480 | 0160-0576 |
| A5A3C9 | 0160-2207 | 3 | 1 | CAPACITOR-FXD 300PF +-5% 300VDC MICA | 28480 | 0160-2207 |
| A5A3C10 | 0140-0196 | 3 | 1 | CAPACITOR-FXD 150PF +-5% 300VDC MICA | 72136 | DM15F151J0300WV1CR |
| A5A3C11 | 0160-0576 | 5 | | CAPACITOR-FXD .1UF +-20% 50VDC CER | 28480 | 0160-0576 |
| A5A3C12 | 0160-0576 | 5 | | CAPACITOR-FXD .1UF +-20% 50VDC CER | 28480 | 0160-0576 |
| A5A3C13 | 0160-2265 | 3 | 3 | CAPACITOR-FXD 22PF +-5% 500VDC CER 0+-30 | 28480 | 0160-2265 |
| A5A3C14 | 0160-2200 | 6 | 1 | CAPACITOR-FXD 43PF +-5% 300VDC MICA | 28480 | 0160-2200 |
| A5A3C15 | 0160-3878 | 6 | 6 | CAPACITOR-FXD 1000PF +-20% 100VDC CER | 28480 | 0160-3878 |
| A5A3C16 | 0160-0576 | 5 | | CAPACITOR-FXD .1UF +-20% 50VDC CER | 28480 | 0160-0576 |
| A5A3C17 | 0160-0576 | 5 | | CAPACITOR-FXD .1UF +-20% 50VDC CER | 28480 | 0160-0576 |
| A5A3C18 | 0160-0155 | 6 | 1 | CAPACITOR-FXD 3300PF +-10% 200VDC POLYE | 28480 | 0160-0155 |
| A5A3C19 | 0160-0576 | 5 | | CAPACITOR-FXD .1UF +-20% 50VDC CER | 28480 | 0160-0576 |
| A5A3C20 | 0160-5652 | 8 | 2 | CAPACITOR-FXD 2.2UF +-20% 50VDC CER | 28480 | 0160-5652 |
| A5A3C21 | 0160-4031 | 5 | 2 | CAPACITOR-FXD 330PF +-5% 100VDC CER | 28480 | 0160-4031 |
| A5A3C22 | 0160-5652 | 8 | | CAPACITOR-FXD 2.2UF +-20% 50VDC CER | 28480 | 0160-5652 |
| A5A3C23 | 0160-3876 | 4 | 1 | CAPACITOR-FXD 47PF +-20% 200VDC CER | 28480 | 0160-3876 |
| A5A3C24 | 0160-2055 | 9 | 8 | CAPACITOR-FXD .01UF +80-20% 100VDC CER | 28480 | 0160-2055 |
| A5A3C25 | 0160-0576 | 5 | | CAPACITOR-FXD .1UF +-20% 50VDC CER | 28480 | 0160-0576 |
| A5A3C26 | 0160-0576 | 5 | | CAPACITOR-FXD .1UF +-20% 50VDC CER | 28480 | 0160-0576 |
| A5A3C27 | 0160-0576 | 5 | | CAPACITOR-FXD .1UF +-20% 50VDC CER | 28480 | 0160-0576 |
| A5A3C28 | 0160-0576 | 5 | | CAPACITOR-FXD .1UF +-20% 50VDC CER | 28480 | 0160-0576 |
| A5A3C29 | 0160-2265 | 3 | | CAPACITOR-FXD 22PF +-5% 500VDC CER 0+-30 | 28480 | 0160-2265 |
| A5A3C30 | 0160-0576 | 5 | | CAPACITOR-FXD .1UF +-20% 50VDC CER | 28480 | 0160-0576 |
| A5A3C31 | 0160-0576 | 5 | | CAPACITOR-FXD .1UF +-20% 50VDC CER | 28480 | 0160-0576 |
| A5A3C32 | 0160-0161 | 4 | | CAPACITOR-FXD .01UF +-10% 200VDC POLYE | 28480 | 0160-0161 |
| A5A3C33 | 0160-4386 | 3 | 1 | CAPACITOR-FXD 33PF +-5% 200VDC CER 0+-30 | 28480 | 0160-4386 |
| A5A3C34 | 0160-2055 | 9 | | CAPACITOR-FXD .01UF +80-20% 100VDC CER | 28480 | 0160-2055 |
| A5A3C35 | 0160-0576 | 5 | | CAPACITOR-FXD .1UF +-20% 50VDC CER | 28480 | 0160-0576 |
| A5A3C36 | 0160-0576 | 5 | | CAPACITOR-FXD .1UF +-20% 50VDC CER | 28480 | 0160-0576 |
| A5A3C37 | 0160-0576 | 5 | | CAPACITOR-FXD .1UF +-20% 50VDC CER | 28480 | 0160-0576 |
| A5A3CR1 | 1901-0050 | 3 | | DIODE-SWITCHING 80V 200MA 2NS DO-35 | 28480 | 1901-0050 |
| A5A3CR2 | 1901-0050 | 3 | | DIODE-SWITCHING 80V 200MA 2NS DO-35 | 28480 | 1901-0050 |
| A5A3CR3 | 1901-0050 | 3 | | DIODE-SWITCHING 80V 200MA 2NS DO-35 | 28480 | 1901-0050 |
| A5A3CR4 | 1901-0050 | 3 | | DIODE-SWITCHING 80V 200MA 2NS DO-35 | 28480 | 1901-0050 |
| A5A3CR5 | 1901-0539 | 3 | | DIODE-SM SIG SCHOTTKY | 28480 | 1901-0539 |

A5



See introduction to this section for ordering information
*Indicates factory selected value
†Backdating information in Section VII

www.valuetronics.com

Table 6-3. Replaceable Parts

| Reference Designation | HP Part Number | C D | Qty | Description | Mfr Code | Mfr Part Number |
|---|---|---|---|---|---|---|
| A5A3CR6 | 1901-0539 | 3 | | DIODE-SM SIG SCHOTTKY | 28480 | 1901-0539 |
| A5A3CR7 | 1901-0050 | 3 | | DIODE-SWITCHING 80V 200MA 2NS DO-35 | 28480 | 1901-0050 |
| A5A3CR8 | 1901-0050 | 3 | | DIODE-SWITCHING 80V 200MA 2NS DO-35 | 28480 | 1901-0050 |
| A5A3CR9 | 1901-0050 | 3 | | DIODE-SWITCHING 80V 200MA 2NS DO-35 | 28480 | 1901-0050 |
| A5A3CR10 | 1901-0050 | 3 | | DIODE-SWITCHING 80V 200MA 2NS DO-35 | 28480 | 1901-0050 |
| A5A3CR11 | 1901-0050 | 3 | | DIODE-SWITCHING 80V 200MA 2NS DO-35 | 28480 | 1901-0050 |
| A5A3CR12 | 1901-0050 | 3 | | DIODE-SWITCHING 80V 200MA 2NS DO-35 | 28480 | 1901-0050 |
| A5A3CR13 | 1901-0050 | 3 | | DIODE-SWITCHING 80V 200MA 2NS DO-35 | 28480 | 1901-0050 |
| A5A3L1 | 9140-0144 | 0 | | INDUCTOR RF-CH-MLD 4.7UH 10% .105DX.26LG | 28480 | 9140-0144 |
| A5A3L2 | 9140-0144 | 0 | | INDUCTOR RF-CH-MLD 4.7UH 10% .105DX.26LG | 28480 | 9140-0144 |
| A5A3L3 | 9140-0144 | 0 | | INDUCTOR RF-CH-MLD 4.7UH 10% .105DX.26LG | 28480 | 9140-0144 |
| A5A3MP1 | 1480-0073 | 6 | | PIN-ROLL .062-IN-DIA .25-IN-LG BE-CU | 28480 | 1480-0073 |
| A5A3MP2 | 4040-0748 | 3 | 4 | EXTR-PC BD BLK POLYC .062-BD-THKNS | 28480 | 4040-0748 |
| A5A3MP3 | 4040-0751 | 8 | 1 | EXTR-PC BD ORN POLYC .062-BD-THKNS | 28480 | 4040-0751 |
| A5A3Q1 | 1854-0810 | 2 | | TRANSISTOR NPN SI PD=625MW FT=200MHZ | 28480 | 1854-0810 |
| A5A3Q2 | 1855-0327 | 8 | 1 | TRANSISTOR J-FET 2N4416 N-CHAN D-MODE | 01295 | 2N4416 |
| A5A3Q3 | 1854-0830 | 6 | 1 | TRANSISTOR-DUAL NPN PD=500MW | 27014 | LM394 |
| A5A3Q4 | 1854-0810 | 2 | | TRANSISTOR NPN SI PD=625MW FT=200MHZ | 28480 | 1854-0810 |
| A5A3Q5 | 1854-0475 | 5 | | TRANSISTOR-DUAL NPN PD=750MW | 28480 | 1854-0475 |
| A5A3Q6 | 1853-0459 | 3 | | TRANSISTOR PNP SI PD=625MW FT=200MHZ | 28480 | 1853-0459 |
| A5A3Q7 | 1854-0810 | 2 | | TRANSISTOR NPN SI PD=625MW FT=200MHZ | 28480 | 1854-0810 |
| A5A3Q8 | 1855-0414 | 4 | 4 | TRANSISTOR J-FET 2N4393 N-CHAN D-MODE | 04713 | 2N4393 |
| A5A3Q9 | 1854-0810 | 2 | | TRANSISTOR NPN SI PD=625MW FT=200MHZ | 28480 | 1854-0810 |
| A5A3Q10 | 1855-0253 | 9 | | TRANSISTOR J-FET N-CHAN D-MODE TO-92 SI | 28480 | 1855-0253 |
| A5A3Q11 | 1853-0322 | 9 | | TRANSISTOR PNP 2N2946A SI TO-46 PD=400MW | 01295 | 2N2946A |
| A5A3Q12 | 1853-0322 | 9 | | TRANSISTOR PNP 2N2946A SI TO-46 PD=400MW | 01295 | 2N2946A |
| A5A3Q13 | 1853-0316 | 1 | | TRANSISTOR-DUAL PNP PD=500MW | 28480 | 1853-0316 |
| A5A3Q14 | 1854-0810 | 2 | | TRANSISTOR NPN SI PD=625MW FT=200MHZ | 28480 | 1854-0810 |
| A5A3Q15 | 1855-0253 | 9 | | TRANSISTOR J-FET N-CHAN D-MODE TO-92 SI | 28480 | 1855-0253 |
| A5A3R1 | 0757-0346 | 2 | | RESISTOR 10 1% .125W F TC=0+-100 | 24546 | C4-1/8-T0-10R0-F |
| A5A3R2 | 0698-0083 | 8 | 15 | RESISTOR 1.96K 1% .125W F TC=0+-100 | 24546 | C4-1/8-T0-1961-F |
| A5A3R3 | 0698-6812 | 7 | 3 | RESISTOR 1 1% .125W F TC=0+-100 | 28480 | 0698-6812 |
| A5A3R4 | 0698-3101 | 7 | 1 | RESISTOR 2.87K 1% .5W F TC=0+-100 | 28480 | 0698-3101 |
| A5A3R5 | 0757-0421 | 4 | 3 | RESISTOR 825 1% .125W F TC=0+-100 | 24546 | C4-1/8-T0-825R-F |
| A5A3R6 | 0698-7261 | 8 | | RESISTOR 11K 1% .05W F TC=0+-100 | 24546 | C3-1/8-T0-1102-F |
| A5A3R7 | 0757-0458 | 7 | 5 | RESISTOR 51.1K 1% .125W F TC=0+-100 | 24546 | C4-1/8-T0-5112-F |
| A5A3R8 | 0757-0442 | 9 | | RESISTOR 10K 1% .125W F TC=0+-100 | 24546 | C4-1/8-T0-1002-F |
| A5A3R9 | 0698-5808 | 5 | 1 | RESISTOR 4K 1% .125W F TC=0+-100 | 24546 | C4-1/8-T0-4001-F |
| A5A3R10 | 0698-7277 | 6 | | RESISTOR 51.1K 1% .05W F TC=0+-100 | 24546 | C3-1/8-T0-5112-F |
| A5A3R11 | 0757-0418 | 7 | 15 | RESISTOR 511 1% .125W F TC=0+-100 | 24546 | C4-1/8-T0-511R-F |
| A5A3R12 | 2100-2039 | 5 | | RESISTOR-TRMR 20K 5% 1W SIDE-ADJ 10-TRN | 28480 | 2100-2039 |
| A5A3R13 | 0698-3447 | 4 | 4 | RESISTOR 422 1% .125W F TC=0+-100 | 24546 | C4-1/8-T0-422R-F |
| A5A3R14 | 0698-3160 | 8 | 4 | RESISTOR 31.6K 1% .125W F TC=0+-100 | 24546 | C4-1/8-T0-3162-F |
| A5A3R15 | 1810-0205 | 7 | 1 | NETWORK-RES 8-SIP4.7K OHM X 7 | 01121 | 208A472 |
| A5A3R16 | 0757-0431 | 6 | 1 | RESISTOR 2.43K 1% .125W F TC=0+-100 | 24546 | C4-1/8-T0-2431-F |
| A5A3R17 | 0698-7238 | 9 | 1 | RESISTOR 1.21K 1% .05W F TC=0+-100 | 24546 | C3-1/8-T0-1211-F |
| A5A3R18 | 0757-0280 | 3 | | RESISTOR 1K 1% .125W F TC=0+-100 | 24546 | C4-1/8-T0-1001-F |
| A5A3R19 | 0757-0442 | 9 | | RESISTOR 10K 1% .125W F TC=0+-100 | 24546 | C4-1/8-T0-1002-F |
| A5A3R20 | 0698-7281 | 2 | 1 | RESISTOR 75K 2% .05W F TC=0+-100 | 24546 | C3-1/8-T0-7502-G |
| A5A3R21 | 0698-7262 | 9 | 2 | RESISTOR 12.1K 1% .05W F TC=0+-100 | 24546 | C3-1/8-T0-1212-F |
| A5A3R22 | 0698-7254 | 9 | 2 | RESISTOR 5.62K 1% .05W F TC=0+-100 | 24546 | C3-1/8-T0-5621-F |
| A5A3R23 | 0757-0441 | 8 | 5 | RESISTOR 8.25K 1% .125W F TC=0+-100 | 24546 | C4-1/8-T0-8251-F |
| A5A3R24 | 0698-4014 | 3 | 1 | RESISTOR 787 1% .125W F TC=0+-100 | 24546 | C4-1/8-T0-787R-F |
| A5A3R25 | 0698-3510 | 2 | 1 | RESISTOR 453 1% .125W F TC=0+-100 | 24546 | C4-1/8-T0-453R-F |
| A5A3R26 | 0698-4414 | 7 | 1 | RESISTOR 158 1% .125W F TC=0+-100 | 24546 | C4-1/8-T0-158R-F |
| A5A3R27 | 0698-7240 | 3 | 1 | RESISTOR 1.47K 1% .05W F TC=0+-100 | 24546 | C3-1/8-T0-1471-F |
| A5A3R28 | 0698-3495 | 2 | 1 | RESISTOR 866 1% .125W F TC=0+-100 | 24546 | C4-1/8-T0-866R-F |
| A5A3R29 | 0698-3151 | 7 | 3 | RESISTOR 2.87K 1% .125W F TC=0+-100 | 24546 | C4-1/8-T0-2871-F |
| A5A3R30 | 0757-0441 | 8 | | RESISTOR 8.25K 1% .125W F TC=0+-100 | 24546 | C4-1/8-T0-8251-F |
| A5A3R31 | 2100-3351 | 6 | 2 | RESISTOR-TRMR 500 10% C SIDE-ADJ 1-TRN | 28480 | 2100-3351 |
| A5A3R32 | 0757-0317 | 7 | | RESISTOR 1.33K 1% .125W F TC=0+-100 | 24546 | C4-1/8-T0-1331-F |
| A5A3R33 | 0698-7222 | 1 | | RESISTOR 261 1% .05W F TC=0+-100 | 24546 | C3-1/8-T0-261R-F |
| A5A3R34 | 0698-7222 | 1 | | RESISTOR 261 1% .05W F TC=0+-100 | 24546 | C3-1/8-T0-261R-F |
| A5A3R35 | 0757-0441 | 8 | | RESISTOR 8.25K 1% .125W F TC=0+-100 | 24546 | C4-1/8-T0-8251-F |

A5

See introduction to this section for ordering information
*Indicates factory selected value
†Backdating information in Section VII



www.valuetronics.com

Table 6-3. Replaceable Parts

| Reference Designation | HP Part Number | C D | Qty | Description | Mfr Code | Mfr Part Number |
|---|---|---|---|---|---|---|
| A5A3R36 | 0698-7244 | 7 | | RESISTOR 2.15K 1% .05W F TC=0+-100 | 24546 | C3-1/8-T0-2151-F |
| A5A3R37 | 0698-7254 | 9 | | RESISTOR 6.62K 1% .05W F TC=0+-100 | 24546 | C3-1/8-T0-6621-F |
| A5A3R38 | 0757-0458 | 7 | | RESISTOR 51.1K 1% .125W F TC=0+-100 | 24546 | C4-1/8-T0-5112-F |
| A5A3R39 | 0698-7277 | 6 | | RESISTOR 51.1K 1% .05W F TC=0+-100 | 24546 | C3-1/8-T0-5112-F |
| A5A3R40 | 0698-7277 | 6 | | RESISTOR 51.1K 1% .05W F TC=0+-100 | 24546 | C3-1/8-T0-5112-F |
| A5A3R41 | 0757-0439 | 4 | | RESISTOR 6.81K 1% .125W F TC=0+-100 | 24546 | C4-1/8-T0-6811-F |
| A5A3R42 | 0698-0083 | 8 | | RESISTOR 1.96K 1% .125W F TC=0+-100 | 24546 | C4-1/8-T0-1961-F |
| A5A3R43 | 2100-3353 | 8 | | RESISTOR-TRMR 20K 10% C SIDE-ADJ 1-TRN | 28480 | 2100-3353 |
| A5A3R44 | 0698-0083 | 8 | | RESISTOR 1.96K 1% .125W F TC=0+-100 | 24546 | C4-1/8-T0-1961-F |
| A5A3R45 | 0698-3450 | 9 | 5 | RESISTOR 42.2K 1% .125W F TC=0+-100 | 24546 | C4-1/8-T0-4222-F |
| A5A3R46 | 0757-0438 | 3 | | RESISTOR 5.11K 1% .125W F TC=0+-100 | 24546 | C4-1/8-T0-5111-F |
| A5A3R47 | 0698-3456 | 5 | 1 | RESISTOR 287K 1% .125W F TC=0+-100 | 24546 | C4-1/8-T0-2873-F |
| A5A3R48 | 0698-3447 | 4 | | RESISTOR 422 1% .125W F TC=0+-100 | 24546 | C4-1/8-T0-422R-F |
| A5A3R49 | 0698-0083 | 8 | | RESISTOR 1.96K 1% .125W F TC=0+-100 | 24546 | C4-1/8-T0-1961-F |
| A5A3R50 | 0757-0447 | 4 | 3 | RESISTOR 16.2K 1% .125W F TC=0+-100 | 24546 | C4-1/8-T0-1622-F |
| A5A3R51 | 2100-3352 | 7 | 1 | RESISTOR-TRMR 1K 10% C SIDE-ADJ 1-TRN | 28480 | 2100-3352 |
| A5A3R52 | 0757-0317 | 7 | | RESISTOR 1.33K 1% .125W F TC=0+-100 | 24546 | C4-1/8-T0-1331-F |
| A5A3R53 | 0698-7212 | 9 | | RESISTOR 100 1% .05W F TC=0+-100 | 24546 | C3-1/8-T0-100R-F |
| A5A3R54 | 0698-7212 | 9 | | RESISTOR 100 1% .05W F TC=0+-100 | 24546 | C3-1/8-T0-100R-F |
| A5A3R55 | 0757-0317 | 7 | | RESISTOR 1.33K 1% .125W F TC=0+-100 | 24546 | C4-1/8-T0-1331-F |
| A5A3R56 | 0698-7268 | 5 | 1 | RESISTOR 21.5K 1% .05W F TC=0+-100 | 24546 | C3-1/8-T0-2152-F |
| A5A3R57 | 0698-3157 | 3 | 2 | RESISTOR 19.6K 1% .125W F TC=0+-100 | 24546 | C4-1/8-T0-1962-F |
| A5A3R58 | 0757-0274 | 5 | | RESISTOR 1.21K 1% .125W F TC=0+-100 | 24546 | C4-1/8-T0-1211-F |
| A5A3R59 | 0757-0280 | 3 | | RESISTOR 1K 1% .125W F TC=0+-100 | 24546 | C4-1/8-T0-1001-F |
| A5A3R60 | 0698-3158 | 4 | 1 | RESISTOR 23.7K 1% .125W F TC=0+-100 | 24546 | C4-1/8-T0-2372-F |
| A5A3R61 | 0698-7270 | 9 | | RESISTOR 26.1K 1% .05W F TC=0+-100 | 24546 | C3-1/8-T0-2612-F |
| A5A3R62 | 0698-7270 | 9 | | RESISTOR 26.1K 1% .05W F TC=0+-100 | 24546 | C3-1/8-T0-2612-F |
| A5A3R63 | 0698-3458 | 7 | | RESISTOR 348K 1% .125W F TC=0+-100 | 28480 | 0698-3458 |
| A5A3R64 | 0698-3236 | 9 | 2 | RESISTOR 15K .25% .125W F TC=0+-50 | 28480 | 0698-3236 |
| A5A3R65 | 0698-7212 | 9 | | RESISTOR 100 1% .05W F TC=0+-100 | 24546 | C3-1/8-T0-100R-F |
| A5A3R66 | 0698-7212 | 9 | | RESISTOR 100 1% .05W F TC=0+-100 | 24546 | C3-1/8-T0-100R-F |
| A5A3R67 | 0698-3155 | 1 | 11 | RESISTOR 4.64K 1% .125W F TC=0+-100 | 24546 | C4-1/8-T0-4641-F |
| A5A3R68 | 0699-7933 | 1 | 1 | RESISTOR 3.83K .1% .125W F TC=0+-25 | 19701 | MF4C1/8-T9-3831-B |
| A5A3R69 | 0698-3445 | 2 | 4 | RESISTOR 348 1% .125W F TC=0+-100 | 24546 | C4-1/8-T0-348R-F |
| A5A3R70 | 0757-0401 | 0 | 17 | RESISTOR 100 1% .125W F TC=0+-100 | 24546 | C4-1/8-T0-101-F |
| A5A3R71 | 0698-3236 | 9 | | RESISTOR 15K .25% .125W F TC=0+-50 | 28480 | 0698-3236 |
| A5A3R72 | 2100-3109 | 2 | 1 | RESISTOR-TRMR 2K 10% C SIDE-ADJ 17-TRN | 02111 | 43P202 |
| A5A3R73 | 0698-7252 | 7 | | RESISTOR 4.64K 1% .05W F TC=0+-100 | 24546 | C3-1/8-T0-4641-F |
| A5A3R74 | 0698-7243 | 6 | | RESISTOR 1.96K 1% .05W F TC=0+-100 | 24546 | C3-1/8-T0-1961-F |
| A5A3R75 | 0698-7260 | 7 | | RESISTOR 10K 1% .05W F TC=0+-100 | 24546 | C3-1/8-T0-1002-F |
| A5A3R76 | 0698-7277 | 6 | | RESISTOR 51.1K 1% .05W F TC=0+-100 | 24546 | C3-1/8-T0-5112-F |
| A5A3R77 | 0698-7255 | 0 | 1 | RESISTOR 6.19K 1% .05W F TC=0+-100 | 24546 | C3-1/8-T0-6191-F |
| A5A3R78 | 0698-7277 | 6 | | RESISTOR 51.1K 1% .05W F TC=0+-100 | 24546 | C3-1/8-T0-5112-F |
| A5A3R79 | 0757-0402 | 1 | 1 | RESISTOR 110 1% .125W F TC=0+-100 | 24546 | C4-1/8-T0-111-F |
| A5A3R80 | 0698-3157 | 3 | | RESISTOR 19.6K 1% .125W F TC=0+-100 | 24546 | C4-1/8-T0-1962-F |
| A5A3R81 | 0698-8466 | 7 | 1 | RESISTOR 942 .5% .125W F TC=0+-50 | 28480 | 0698-8466 |
| A5A3R82 | 0757-0317 | 7 | | RESISTOR 1.33K 1% .125W F TC=0+-100 | 24546 | C4-1/8-T0-1331-F |
| A5A3R83 | 2100-3350 | 5 | 1 | RESISTOR-TRMR 200 10% C SIDE-ADJ 1-TRN | 28480 | 2100-3350 |
| A5A3R84 | 0757-0465 | 6 | 2 | RESISTOR 100K 1% .125W F TC=0+-100 | 24546 | C4-1/8-T0-1003-F |
| A5A3R85 | 0698-7260 | 7 | | RESISTOR 10K 1% .05W F TC=0+-100 | 24546 | C3-1/8-T0-1002-F |
| A5A3R86 | 0698-0083 | 8 | | RESISTOR 1.96K 1% .125W F TC=0+-100 | 24546 | C4-1/8-T0-1961-F |
| A5A3R87 | 0757-0464 | 5 | 2 | RESISTOR 90.9K 1% .125W F TC=0+-100 | 24546 | C4-1/8-T0-9092-F |
| A5A3R88 | 0698-8827 | 4 | | RESISTOR 1M 1% .125W F TC=0+-100 | 28480 | 0698-8827 |
| A5A3R89 | 0698-7284 | 5 | | RESISTOR 100K 1% .05W F TC=0+-100 | 24546 | C3-1/8-T0-1003-F |
| A5A3R90 | 0698-7260 | 7 | | RESISTOR 10K 1% .05W F TC=0+-100 | 24546 | C3-1/8-T0-1002-F |
| A5A3R91 | 0757-0438 | 3 | | RESISTOR 5.11K 1% .125W F TC=0+-100 | 24546 | C4-1/8-T0-5111-F |
| A5A3R92 | 0698-7206 | 1 | 1 | RESISTOR 56.2 1% .05W F TC=0+-100 | 24546 | C3-1/8-T0-56R2-F |
| A5A3R93 | 0757-0394 | 0 | 1 | RESISTOR 51.1 1% .125W F TC=0+-100 | 24546 | C4-1/8-T0-51R1-F |
| A5A3R94 | 2100-2574 | 3 | 2 | RESISTOR-TRMR 500 10% C SIDE-ADJ 1-TRN | 30983 | ET50X501 |
| A5A3R95 | 0698-7277 | 6 | | RESISTOR 51.1K 1% .05W F TC=0+-100 | 24546 | C3-1/8-T0-5112-F |
| A5A3R96 | 0698-7212 | 9 | | RESISTOR 100 1% .05W F TC=0+-100 | 24546 | C3-1/8-T0-100R-F |
| A5A3R97 | 0698-3447 | 4 | | RESISTOR 422 1% .125W F TC=0+-100 | 24546 | C4-1/8-T0-422R-F |
| A5A3RT1 | 0837-0295 | 0 | 1 | THERMISTOR TUB WITH AXL LEADS 2.7K-OHM | 28480 | 0837-0295 |
| A5A3RT2 | | | | NOT ASSIGNED | | |

See introduction to this section for ordering information
*Indicates factory selected value
†Backdating information in Section VII



www.valuetronics.com

Table 6-3. Replaceable Parts

| Reference Designation | HP Part Number | CD | Qty | Description | Mfr Code | Mfr Part Number |
|---|---|---|---|---|---|---|
| A5A3TP1 | 1251-0600 | 0 | 24 | CONNECTOR-SGL CONT PIN 1.14-MM-BSC-SZ SQ | 28480 | 1251-0600 |
| A5A3TP2 | 1251-0600 | 0 | | CONNECTOR-SGL CONT PIN 1.14-MM-BSC-SZ SQ | 28480 | 1251-0600 |
| A5A3TP3 | 1251-0600 | 0 | | CONNECTOR-SGL CONT PIN 1.14-MM-BSC-SZ SQ | 28480 | 1251-0600 |
| A5A3TP4 | 1251-0600 | 0 | | CONNECTOR-SGL CONT PIN 1.14-MM-BSC-SZ SQ | 28480 | 1251-0600 |
| A5A3TP5 | 1251-0600 | 0 | | CONNECTOR-SGL CONT PIN 1.14-MM-BSC-SZ SQ | 28480 | 1251-0600 |
| A5A3U1 | 1826-0059 | 2 | 3 | IC OP AMP GP TO-99 PKG | 01295 | LM201AL |
| A5A3U2 | 1826-0600 | 9 | 1 | IC OP AMP LOW-BIAS-H-IMPD QUAD 14-DIP-P | 01295 | TL074ACN |
| A5A3U3 | 1826-0520 | 2 | 2 | IC OP AMP LOW-BIAS-H-IMPD 8-DIP-P PKG | 01295 | TL071BCP |
| A5A3U4 | 1826-0501 | 9 | 1 | IC MULTIPLXR 2-CHAN-ANLG TRIPLE 16-DIP-P | 04713 | MC14053BCP |
| A5A3U5 | 1826-0413 | 2 | 4 | IC OP AMP LOW-BIAS-H-IMPD TO-99 PKG | 34371 | HA2-2605-5 |
| A5A3U6 | 1826-0413 | 2 | | IC OP AMP LOW-BIAS-H-IMPD TO-99 PKG | 34371 | HA2-2605-5 |
| A5A3U7 | 1820-0126 | 1 | 1 | IC COMPARATOR GP DUAL TO-100 PKG | 07263 | 711HC |
| A5A3U8 | 1826-0582 | 6 | 4 | IC SWITCH ANLG QUAD 16-DIP-C PKG | 27014 | LF13201D |
| A5A3U9 | 1826-0413 | 2 | | IC OP AMP LOW-BIAS-H-IMPD TO-99 PKG | 34371 | HA2-2605-5 |
| A5A3U10 | 1820-1445 | 0 | 8 | IC LCH TTL LS 4-BIT | 01295 | SN74LS375N |
| A5A3U11 | 1820-1445 | 0 | | IC LCH TTL LS 4-BIT | 01295 | SN74LS375N |
| A5A3U12 | 1826-0520 | 2 | | IC OP AMP LOW-BIAS-H-IMPD 8-DIP-P PKG | 01295 | TL071BCP |
| A5A3U13 | 1826-0413 | 2 | | IC OP AMP LOW-BIAS-H-IMPD TO-99 PKG | 34371 | HA2-2605-5 |
| A5A3U14 | 1826-0471 | 2 | | IC OP AMP LOW-DRIFT TO-99 PKG | 28480 | 1826-0471 |
| A5A3U15 | 1826-0059 | 2 | | IC OP AMP GP TO-99 PKG | 01295 | LM201AL |
| A5A3VR1 | 1902-0951 | 5 | | DIODE-ZNR 5.1V 5% DO-35 PD=.4W TC=+.035% | 28480 | 1902-0951 |
| A5A3VR2 | 1902-0962 | 8 | | DIODE-ZNR 15V 5% DO-35 PD=.4W TC=+.087% | 28480 | 1902-0962 |
| A5A3VR3 | 1902-0961 | 7 | 1 | DIODE-ZNR 13V 5% DO-35 PD=.4W TC=+.082% | 28480 | 1902-0961 |
| A5A3VR4 | 1902-0948 | 0 | 4 | DIODE-ZNR 3.9V 5% DO-35 PD=.4W TC=-.012% | 28480 | 1902-0948 |
| A5A3VR5 | 1902-0948 | 0 | | DIODE-ZNR 3.9V 5% DO-35 PD=.4W TC=-.012% | 28480 | 1902-0948 |
| A5A3VR6 | 1902-0948 | 0 | | DIODE-ZNR 3.9V 5% DO-35 PD=.4W TC=-.012% | 28480 | 1902-0948 |
| A5A3VR7 | 1902-0951 | 5 | | DIODE-ZNR 5.1V 5% DO-35 PD=.4W TC=+.035% | 28480 | 1902-0951 |
| A5A3VR8 | 1902-0954 | 8 | 1 | DIODE-ZNR 6.8V 5% DO-35 PD=.4W TC=+.057% | 28480 | 1902-0954 |
| A5A3VR9 | 1902-0950 | 4 | 1 | DIODE-ZNR 4.7V 5% DO-35 PD=.4W TC=+.025% | 28480 | 1902-0950 |
| A5A4 | 08673-60117 | 1 | 1 | BD AY PULSE DRVR | 28480 | 08673-60117 |
| A5A4C1 | 0180-0116 | 1 | 4 | CAPACITOR-FXD 6.8UF+-10% 35VDC TA | 56289 | 150D685X903582 |
| A5A4C2 | 0180-1746 | 5 | 1 | CAPACITOR-FXD 15UF+-10% 20VDC TA | 56289 | 150D156X902082 |
| A5A4C3 | 0160-3878 | 6 | | CAPACITOR-FXD 1000PF +-20% 100VDC CER | 28480 | 0160-3878 |
| A5A4C4 | 0160-0576 | 5 | | CAPACITOR-FXD .1UF +-20% 50VDC CER | 28480 | 0160-0576 |
| A5A4C5 | 0180-0229 | 7 | 2 | CAPACITOR-FXD 33UF+-10% 10VDC TA | 56289 | 150D336X9010B2 |
| A5A4C6 | 0160-0174 | 9 | | CAPACITOR-FXD .47UF +80-20% 25VDC CER | 28480 | 0160-0174 |
| A5A4C7 | 0170-0040 | 9 | 1 | CAPACITOR-FXD .047UF +-10% 200VDC POLYE | 56289 | 292P47392 |
| A5A4C8 | 0160-3879 | 7 | | CAPACITOR-FXD .01UF +-20% 100VDC CER | 28480 | 0160-3879 |
| A5A4C9 | 0160-0576 | 5 | | CAPACITOR-FXD .1UF +-20% 50VDC CER | 28480 | 0160-0576 |
| A5A4C10 | 0160-0174 | 9 | | CAPACITOR-FXD .47UF +80-20% 25VDC CER | 28480 | 0160-0174 |
| A5A4C11 | 0160-0174 | 9 | | CAPACITOR-FXD .47UF +80-20% 25VDC CER | 28480 | 0160-0174 |
| A5A4C12 | 0160-0576 | 5 | | CAPACITOR-FXD .1UF +-20% 50VDC CER | 28480 | 0160-0576 |
| A5A4C13 | 0160-0576 | 5 | | CAPACITOR-FXD .1UF +-20% 50VDC CER | 28480 | 0160-0576 |
| A5A4C14 | 0160-0576 | 5 | | CAPACITOR-FXD .1UF +-20% 50VDC CER | 28480 | 0160-0576 |
| A5A4C15 | 0160-0576 | 5 | | CAPACITOR-FXD .1UF +-20% 50VDC CER | 28480 | 0160-0576 |
| A5A4C16 | 0160-0174 | 9 | | CAPACITOR-FXD .47UF +80-20% 25VDC CER | 28480 | 0160-0174 |
| A5A4C17 | 0160-0576 | 5 | | CAPACITOR-FXD .1UF +-20% 50VDC CER | 28480 | 0160-0576 |
| A5A4C18 | 0160-0576 | 5 | | CAPACITOR-FXD .1UF +-20% 50VDC CER | 28480 | 0160-0576 |
| A5A4C19 | 0160-0576 | 5 | | CAPACITOR-FXD .1UF +-20% 50VDC CER | 28480 | 0160-0576 |
| A5A4C20 | 0160-0174 | 9 | | CAPACITOR-FXD .47UF +80-20% 25VDC CER | 28480 | 0160-0174 |
| A5A4C21 | 0160-0576 | 5 | | CAPACITOR-FXD .1UF +-20% 50VDC CER | 28480 | 0160-0576 |
| A5A4C22 | 0160-4031 | 5 | | CAPACITOR-FXD 330PF +-5% 100VDC CER | 28480 | 0160-4031 |
| A5A4C23 | 0160-4350 | 1 | 2 | CAPACITOR-FXD 68PF +-5% 200VDC CER 0+-30 | 28480 | 0160-4350 |
| A5A4C24 | 0160-0573 | 2 | | CAPACITOR-FXD 4700PF +-20% 100VDC CER | 28480 | 0160-0573 |
| A5A4C25 | 0160-4387 | 4 | 8 | CAPACITOR-FXD 47PF +-5% 200VDC CER 0+-30 | 28480 | 0160-4387 |
| A5A4C26 | 0160-4389 | 6 | 2 | CAPACITOR-FXD 100PF +-5PF 200VDC CER | 28480 | 0160-4389 |
| A5A4C27 | 0160-4350 | 1 | | CAPACITOR-FXD 68PF +-5% 200VDC CER 0+-30 | 28480 | 0160-4350 |
| A5A4C28 | 0160-4520 | 7 | 1 | CAPACITOR-FXD 11PF +-5% 200VDC CER 0+-30 | 28480 | 0160-4520 |
| A5A4C29 | 0160-2257 | 3 | 3 | CAPACITOR-FXD 10PF +-5% 500VDC CER 0+-60 | 28480 | 0160-2257 |
| A5A4C30 | 0160-4389 | 6 | | CAPACITOR-FXD 100PF +-5PF 200VDC CER | 28480 | 0160-4389 |
| A5A4C31 | 0160-4387 | 4 | | CAPACITOR-FXD 47PF +-5% 200VDC CER 0+-30 | 28480 | 0160-4387 |
| A5A4C32 | 0160-2266 | 4 | 2 | CAPACITOR-FXD 24PF +-5% 500VDC CER 0+-30 | 28480 | 0160-2266 |
| A5A4C33 | 0160-3874 | 2 | 1 | CAPACITOR-FXD 10PF +-.5PF 200VDC CER | 28480 | 0160-3874 |
| A5A4C34 | 0160-2257 | 3 | | CAPACITOR-FXD 10PF +-5% 500VDC CER 0+-60 | 28480 | 0160-2257 |
| A5A4C35 | 0160-2266 | 4 | | CAPACITOR-FXD 24PF +-5% 500VDC CER 0+-30 | 28480 | 0160-2266 |

A5

See introduction to this section for ordering information
*Indicates factory selected value
†Backdating information in Section VII



www.valuetronics.com

Table 6-3. Replaceable Parts

| Reference Designation | HP Part Number | C D | Qty | Description | Mfr Code | Mfr Part Number |
|---|---|---|---|---|---|---|
| A5A4C36 | 0180-0374 | 3 | | CAPACITOR-FXD 10UF+-10% 20VDC TA | 56289 | 150D106X9020B2 |
| A5A4C37 | 0160-2259 | 5 | 1 | CAPACITOR-FXD 12PF +-5% 500VDC CER 0+-30 | 28480 | 0160-2259 |
| A5A4C38 | 0160-2199 | 2 | 1 | CAPACITOR-FXD 30PF +-5% 300VDC MICA | 28480 | 0160-2199 |
| A5A4C39 | 0160-0576 | 5 | | CAPACITOR-FXD .1UF +-20% 50VDC CER | 28480 | 0160-0576 |
| A5A4C40 | 0160-0576 | 5 | | CAPACITOR-FXD .1UF +-20% 50VDC CER | 28480 | 0160-0576 |
| A5A4C41 | 0160-2257 | 3 | | CAPACITOR-FXD 10PF +-5% 500VDC CER 0+-60 | 28480 | 0160-2257 |
| A5A4C42 | 0160-4103 | 2 | 2 | CAPACITOR-FXD 220PF +-5% 100VDC CER | 72982 | 8121-M100-C0G-221J |
| A5A4C43 | 0160-3875 | 3 | 2 | CAPACITOR-FXD 22PF +-5% 200VDC CER 0+-30 | 28480 | 0160-3875 |
| A5A4C44 | 0160-2220 | 0 | 1 | CAPACITOR-FXD 1200PF +-5% 300VDC MICA | 28480 | 0160-2220 |
| A5A4C45 | 0160-3537 | 4 | 1 | CAPACITOR-FXD 680PF +-5% 100VDC MICA | 28480 | 0160-3537 |
| A5A4C46 | 0180-0116 | 1 | | CAPACITOR-FXD 6.8UF+-10% 35VDC TA | 56289 | 150D685X9035B2 |
| A5A4C47 | 0180-0116 | 1 | | CAPACITOR-FXD 6.8UF+-10% 35VDC TA | 56289 | 150D685X9035B2 |
| A5A4C48 | 0160-2265 | 3 | | CAPACITOR-FXD 22PF +-5% 500VDC CER 0+-30 | 28480 | 0160-2265 |
| A5A4C49 | 0160-3875 | 3 | | CAPACITOR-FXD 22PF +-5% 200VDC CER 0+-30 | 28480 | 0160-3875 |
| A5A4CR1 | 1901-0539 | 3 | | DIODE-SM SIG SCHOTTKY | 28480 | 1901-0539 |
| A5A4CR2 | 1901-0539 | 3 | | DIODE-SM SIG SCHOTTKY | 28480 | 1901-0539 |
| A5A4CR3 | 1901-0539 | 3 | | DIODE-SM SIG SCHOTTKY | 28480 | 1901-0539 |
| A5A4CR4 | 1901-0539 | 3 | | DIODE-SM SIG SCHOTTKY | 28480 | 1901-0539 |
| A5A4CR5 | 1901-0539 | 3 | | DIODE-SM SIG SCHOTTKY | 28480 | 1901-0539 |
| A5A4CR6 | 1901-0179 | 7 | 1 | DIODE-SWITCHING 15V 50MA 750PS DO-7 | 28480 | 1901-0179 |
| A5A4CR7 | 1901-0539 | 3 | | DIODE-SM SIG SCHOTTKY | 28480 | 1901-0539 |
| A5A4CR8 | 1901-0539 | 3 | | DIODE-SM SIG SCHOTTKY | 28480 | 1901-0539 |
| A5A4CR9 | 1901-0539 | 3 | | DIODE-SM SIG SCHOTTKY | 28480 | 1901-0539 |
| A5A4CR10 | 1901-0539 | 3 | | DIODE-SM SIG SCHOTTKY | 28480 | 1901-0539 |
| A5A4CR11 | 1901-0539 | 3 | | DIODE-SM SIG SCHOTTKY | 28480 | 1901-0539 |
| A5A4CR12 | 1901-0539 | 3 | | DIODE-SM SIG SCHOTTKY | 28480 | 1901-0539 |
| A5A4CR13 | 1901-0539 | 3 | | DIODE-SM SIG SCHOTTKY | 28480 | 1901-0539 |
| A5A4CR14 | 1901-0539 | 3 | | DIODE-SM SIG SCHOTTKY | 28480 | 1901-0539 |
| A5A4CR15 | 1901-0539 | 3 | | DIODE-SM SIG SCHOTTKY | 28480 | 1901-0539 |
| A5A4CR16 | 1901-0539 | 3 | | DIODE-SM SIG SCHOTTKY | 28480 | 1901-0539 |
| A5A4CR17 | 1901-0539 | 3 | | DIODE-SM SIG SCHOTTKY | 28480 | 1901-0539 |
| A5A4CR18 | 1901-0539 | 3 | | DIODE-SM SIG SCHOTTKY | 28480 | 1901-0539 |
| A5A4CR19 | 1901-0539 | 3 | | DIODE-SM SIG SCHOTTKY | 28480 | 1901-0539 |
| A5A4D1 | 08673-80021 | 8 | 1 | DELAY LINE 5NS | 28480 | 08673-80021 |
| A5A4D2 | 08673-80022 | 9 | 1 | DELAY LINE 10NS | 28480 | 08673-80022 |
| A5A4J1 | 1250-1377 | 8 | 2 | CONNECTOR-RF SMB M PC 50-OHM | 28480 | 1250-1377 |
| A5A4J2 | 1250-0836 | 2 | 1 | CONNECTOR-RF SMC M PC 50-OHM | 28480 | 1250-0836 |
| A5A4J3 | 1250-1377 | 8 | | CONNECTOR-RF SMB M PC 50-OHM | 28480 | 1250-1377 |
| A5A4L1 | 9100-1618 | 1 | 2 | INDUCTOR RF-CH-MLD 5.6UH 10% | 28480 | 9100-1618 |
| A5A4L2 | 9100-1618 | 1 | | INDUCTOR RF-CH-MLD 5.6UH 10% | 28480 | 9100-1618 |
| A5A4L3 | 9140-0142 | 8 | 1 | INDUCTOR RF-CH-MLD 2.2UH 10% .105DX.26LG | 28480 | 9140-0142 |
| A5A4L4 | 9100-2261 | 2 | 1 | INDUCTOR RF-CH-MLD 2.7UH 10% .105DX.26LG | 28480 | 9100-2261 |
| A5A4L5 | 9140-0158 | 6 | 1 | INDUCTOR RF-CH-MLD 1UH 10% .105DX.26LG | 28480 | 9140-0158 |
| A5A4MP1 | 1480-0073 | 6 | | PIN-ROLL .062-IN-DIA .25-IN-LG BE-CU | 28480 | 1480-0073 |
| A5A4MP2 | 4040-0748 | 3 | | EXTR-PC BD BLK POLYC .062-BD-THKNS | 28480 | 4040-0748 |
| A5A4MP3 | 4040-0752 | 8 | 1 | EXTR-PC BD YEL POLYC .062-BD-THKNS | 28480 | 4040-0752 |
| A5A4MP4 | 0340-1098 | 0 | 1 | INSULATOR-IC B-NITRIDE | 28480 | 0340-1098 |
| A5A4Q1 | 1853-0405 | 9 | | TRANSISTOR PNP SI PD=300MW FT=850MHZ | 04713 | 2N4209 |
| A5A4Q2 | 1853-0405 | 9 | | TRANSISTOR PNP SI PD=300MW FT=850MHZ | 04713 | 2N4209 |
| A5A4Q3 | 1854-0809 | 9 | 7 | TRANSISTOR NPN 2N2369A SI TO-18 PD=360MW | 28480 | 1854-0809 |
| A5A4Q4 | 1854-0809 | 9 | | TRANSISTOR NPN 2N2369A SI TO-18 PD=360MW | 28480 | 1854-0809 |
| A5A4Q5 | 1854-0809 | 9 | | TRANSISTOR NPN 2N2369A SI TO-18 PD=360MW | 28480 | 1854-0809 |
| A5A4Q6 | 1853-0405 | 9 | | TRANSISTOR PNP SI PD=300MW FT=850MHZ | 04713 | 2N4209 |
| A5A4Q7 | 1853-0405 | 9 | | TRANSISTOR PNP SI PD=300MW FT=850MHZ | 04713 | 2N4209 |
| A5A4Q8 | 1853-0405 | 9 | | TRANSISTOR PNP SI PD=300MW FT=850MHZ | 04713 | 2N4209 |
| A5A4Q9 | 1853-0405 | 9 | | TRANSISTOR PNP SI PD=300MW FT=850MHZ | 04713 | 2N4209 |
| A5A4Q10 | 1854-0809 | 9 | | TRANSISTOR NPN 2N2369A SI TO-18 PD=360MW | 28480 | 1854-0809 |
| A5A4Q11 | 1854-0809 | 9 | | TRANSISTOR NPN 2N2369A SI TO-18 PD=360MW | 28480 | 1854-0809 |
| A5A4Q12 | 1854-0809 | 9 | | TRANSISTOR NPN 2N2369A SI TO-18 PD=360MW | 28480 | 1854-0809 |
| A5A4Q13 | 1853-0405 | 9 | | TRANSISTOR PNP SI PD=300MW FT=850MHZ | 04713 | 2N4209 |
| A5A4Q14 | 1854-0810 | 2 | | TRANSISTOR NPN SI PD=625MW FT=200MHZ | 28480 | 1854-0810 |
| A5A4Q15 | 1853-0405 | 9 | | TRANSISTOR PNP SI PD=300MW FT=850MHZ | 04713 | 2N4209 |



See introduction to this section for ordering information
*Indicates factory selected value
†Backdating information in Section VII

www.valuetronics.com

Table 6-3. Replaceable Parts

| Reference Designation | HP Part Number | C D | Qty | Description | Mfr Code | Mfr Part Number |
|---|---|---|---|---|---|---|
| A5A4R1 | 0698-3430 | 5 | 6 | RESISTOR 21.5 1% .125W F TC=0+-100 | 03888 | PME55-1/8-T0-21R5-F |
| A5A4R2 | 0698-8812 | 7 | | RESISTOR 1 1% .125W F TC=0+-100 | 28480 | 0698-8812 |
| A5A4R3 | 0698-8812 | 7 | | RESISTOR 1 1% .125W F TC=0+-100 | 28480 | 0698-8812 |
| A5A4R4 | 0698-3429 | 2 | 1 | RESISTOR 19.6 1% .125W F TC=0+-100 | 03888 | PME55-1/8-T0-19R6-F |
| A5A4R5 | 0757-1000 | 7 | 1 | RESISTOR 51.1 1% .6W F TC=0+-100 | 28480 | 0757-1000 |
| A5A4R6 | 0757-0401 | 0 | | RESISTOR 100 1% .125W F TC=0+-100 | 24546 | C4-1/8-T0-101-F |
| A5A4R7 | 1810-0204 | 8 | 1 | NETWORK-RES 8-SIP1.0K OHM X 7 | 01121 | 208A102 |
| A5A4R8 | 0757-0416 | 7 | | RESISTOR 511 1% .125W F TC=0+-100 | 24546 | C4-1/8-T0-511R-F |
| A5A4R9 | 2100-3759 | 8 | 1 | RESISTOR-TRMR 2K 10% C SIDE-ADJ 17-TRN | 28480 | 2100-3759 |
| A5A4R10 | 0757-0416 | 7 | | RESISTOR 511 1% .125W F TC=0+-100 | 24546 | C4-1/8-T0-511R-F |
| A5A4R11 | 0757-0280 | 3 | | RESISTOR 1K 1% .125W F TC=0+-100 | 24546 | C4-1/8-T0-1001-F |
| A5A4R12 | 0698-3450 | 9 | | RESISTOR 42.2K 1% .125W F TC=0+-100 | 24546 | C4-1/8-T0-4222-F |
| A5A4R13 | 0757-0280 | 3 | | RESISTOR 1K 1% .125W F TC=0+-100 | 24546 | C4-1/8-T0-1001-F |
| A5A4R14 | 0757-0280 | 3 | | RESISTOR 1K 1% .125W F TC=0+-100 | 24546 | C4-1/8-T0-1001-F |
| A5A4R15 | 0757-0438 | 3 | | RESISTOR 5.11K 1% .125W F TC=0+-100 | 24546 | C4-1/8-T0-5111-F |
| A5A4R16 | 0698-3132 | 4 | 1 | RESISTOR 261 1% .125W F TC=0+-100 | 24546 | C4-1/8-T0-2610-F |
| A5A4R17 | 0757-0280 | 3 | | RESISTOR 1K 1% .125W F TC=0+-100 | 24546 | C4-1/8-T0-1001-F |
| A5A4R18 | 0757-0274 | 5 | | RESISTOR 1.21K 1% .125W F TC=0+-100 | 24546 | C4-1/8-T0-1211-F |
| A5A4R19 | 2100-2413 | 9 | 1 | RESISTOR-TRMR 200 10% C SIDE-ADJ 1-TRN | 30983 | ET50X201 |
| A5A4R20 | 0698-3444 | 1 | | RESISTOR 316 1% .125W F TC=0+-100 | 24546 | C4-1/8-T0-316R-F |
| A5A4R21 | 0757-0280 | 3 | | RESISTOR 1K 1% .125W F TC=0+-100 | 24546 | C4-1/8-T0-1001-F |
| A5A4R22 | 0757-0280 | 3 | | RESISTOR 1K 1% .125W F TC=0+-100 | 24546 | C4-1/8-T0-1001-F |
| A5A4R23 | 0757-0420 | 3 | | RESISTOR 750 1% .125W F TC=0+-100 | 24546 | C4-1/8-T0-751-F |
| A5A4R24 | 0757-0419 | 0 | | RESISTOR 681 1% .125W F TC=0+-100 | 24546 | C4-1/8-T0-681R-F |
| A5A4R25 | 2100-2574 | 3 | | RESISTOR-TRMR 500 10% C SIDE-ADJ 1-TRN | 30983 | ET50X501 |
| A5A4R26 | 0698-3160 | 8 | | RESISTOR 31.6K 1% .125W F TC=0+-100 | 24546 | C4-1/8-T0-3162-F |
| A5A4R27 | 0757-0280 | 3 | | RESISTOR 1K 1% .125W F TC=0+-100 | 24546 | C4-1/8-T0-1001-F |
| A5A4R28 | 0698-3438 | 3 | 4 | RESISTOR 147 1% .125W F TC=0+-100 | 24546 | C4-1/8-T0-147R-F |
| A5A4R29 | 0757-0280 | 3 | | RESISTOR 1K 1% .125W F TC=0+-100 | 24546 | C4-1/8-T0-1001-F |
| A5A4R30 | 0698-3437 | 2 | 1 | RESISTOR 133 1% .125W F TC=0+-100 | 24546 | C4-1/8-T0-133R-F |
| A5A4R31 | 0757-0438 | 3 | | RESISTOR 5.11K 1% .125W F TC=0+-100 | 24546 | C4-1/8-T0-5111-F |
| A5A4R32 | 0698-0083 | 8 | | RESISTOR 1.96K 1% .125W F TC=0+-100 | 24546 | C4-1/8-T0-1961-F |
| A5A4R33 | 0757-0294 | 9 | 1 | RESISTOR 17.8 1% .125W F TC=0+-100 | 19701 | MF4C1/8-T0-17R8-F |
| A5A4R34 | 0757-0416 | 7 | | RESISTOR 511 1% .125W F TC=0+-100 | 24546 | C4-1/8-T0-511R-F |
| A5A4R35 | 0757-0416 | 7 | | RESISTOR 511 1% .125W F TC=0+-100 | 24546 | C4-1/8-T0-511R-F |
| A5A4R36 | 0757-1094 | 9 | 6 | RESISTOR 1.47K 1% .125W F TC=0+-100 | 24546 | C4-1/8-T0-1471-F |
| A5A4R37 | 0698-3430 | 5 | | RESISTOR 21.5 1% .125W F TC=0+-100 | 03888 | PME55-1/8-T0-21R5-F |
| A5A4R38 | 0757-0280 | 3 | | RESISTOR 1K 1% .125W F TC=0+-100 | 24546 | C4-1/8-T0-1001-F |
| A5A4R39 | 0757-0416 | 7 | | RESISTOR 511 1% .125W F TC=0+-100 | 24546 | C4-1/8-T0-511R-F |
| A5A4R40 | 0757-0416 | 7 | | RESISTOR 511 1% .125W F TC=0+-100 | 24546 | C4-1/8-T0-511R-F |
| A5A4R41 | 0757-0280 | 3 | | RESISTOR 1K 1% .125W F TC=0+-100 | 24546 | C4-1/8-T0-1001-F |
| A5A4R42 | 0757-0401 | 0 | | RESISTOR 100 1% .125W F TC=0+-100 | 24546 | C4-1/8-T0-101-F |
| A5A4R43 | 2100-3749 | 6 | 2 | RESISTOR-TRMR 5K 10% C SIDE-ADJ 17-TRN | 28480 | 2100-3749 |
| A5A4R44 | 0757-0280 | 3 | | RESISTOR 1K 1% .125W F TC=0+-100 | 24546 | C4-1/8-T0-1001-F |
| A5A4R45 | 0757-0416 | 7 | | RESISTOR 511 1% .125W F TC=0+-100 | 24546 | C4-1/8-T0-511R-F |
| A5A4R46 | 0757-0416 | 7 | | RESISTOR 511 1% .125W F TC=0+-100 | 24546 | C4-1/8-T0-511R-F |
| A5A4R47 | 0764-0013 | 5 | 1 | RESISTOR 56 5% 2W MO TC=0+-200 | 28480 | 0764-0013 |
| A5A4R48 | 0757-0280 | 3 | | RESISTOR 1K 1% .125W F TC=0+-100 | 24546 | C4-1/8-T0-1001-F |
| A5A4R49 | 0698-3623 | 8 | 1 | RESISTOR 130 5% 2W MO TC=0+-200 | 28480 | 0698-3623 |
| A5A4R50 | 0757-0416 | 7 | | RESISTOR 511 1% .125W F TC=0+-100 | 24546 | C4-1/8-T0-511R-F |
| A5A4R51 | 0698-8817 | 2 | 1 | RESISTOR 2.61 1% .125W F TC=0+-100 | 28480 | 0698-8817 |
| A5A4R52 | 2100-3749 | 6 | | RESISTOR-TRMR 5K 10% C SIDE-ADJ 17-TRN | 28480 | 2100-3749 |
| A5A4R53 | 0698-7242 | 5 | 1 | RESISTOR 1.78K 1% .05W F TC=0+-100 | 24546 | C3-1/8-T0-1781-F |
| A5A4R54 | 0757-0416 | 7 | | RESISTOR 511 1% .125W F TC=0+-100 | 24546 | C4-1/8-T0-511R-F |
| A5A4R55 | 0698-3440 | 7 | 1 | RESISTOR 196 1% .125W F TC=0+-100 | 24546 | C4-1/8-T0-196R-F |
| A5A4R56 | 0757-0416 | 7 | | RESISTOR 511 1% .125W F TC=0+-100 | 24546 | C4-1/8-T0-511R-F |
| A5A4R57 | 0757-0416 | 7 | | RESISTOR 511 1% .125W F TC=0+-100 | 24546 | C4-1/8-T0-511R-F |
| A5A4R58 | 0757-0416 | 7 | | RESISTOR 511 1% .125W F TC=0+-100 | 24546 | C4-1/8-T0-511R-F |
| A5A4R59 | 0698-0082 | 7 | 1 | RESISTOR 464 1% .125W F TC=0+-100 | 24546 | C4-1/8-T0-4640-F |
| A5A4R60 | 0698-3152 | 8 | 1 | RESISTOR 3.48K 1% .125W F TC=0+-100 | 24546 | C4-1/8-T0-3481-F |
| A5A4R61 | 0698-0085 | 0 | 3 | RESISTOR 2.61K 1% .125W F TC=0+-100 | 24546 | C4-1/8-T0-2611-F |
| A5A4R62 | 0698-3444 | 1 | | RESISTOR 316 1% .125W F TC=0+-100 | 24546 | C4-1/8-T0-316R-F |
| A5A4R63 | 0698-3441 | 8 | 10 | RESISTOR 215 1% .125W F TC=0+-100 | 24546 | C4-1/8-T0-215R-F |
| A5A4R64 | 0757-0428 | 1 | 3 | RESISTOR 1.62K 1% .125W F TC=0+-100 | 24546 | C4-1/8-T0-1621-F |
| A5A4R65 | 0757-0419 | 0 | | RESISTOR 681 1% .125W F TC=0+-100 | 24546 | C4-1/8-T0-681R-F |

A5

See introduction to this section for ordering information
*Indicates factory selected value
†Backdating information in Section VII



www.valuetronics.com

Table 6-3. Replaceable Parts

| Reference Designation | HP Part Number | C D | Qty | Description | Mfr Code | Mfr Part Number |
|---|---|---|---|---|---|---|
| A5A4R66 | 0698-3441 | 8 | | RESISTOR 215 1% .125W F TC=0+-100 | 24546 | C4-1/8-T0-215R-F |
| A5A4TP1 | 0360-0535 | 0 | | TERMINAL TEST POINT PCB | 00000 | ORDER BY DESCRIPTION |
| A5A4TP2 | 0360-0535 | 0 | | TERMINAL TEST POINT PCB | 00000 | ORDER BY DESCRIPTION |
| A5A4TP3 | 0360-0535 | 0 | | TERMINAL TEST POINT PCB | 00000 | ORDER BY DESCRIPTION |
| A5A4TP4 | 0360-0535 | 0 | | TERMINAL TEST POINT PCB | 00000 | ORDER BY DESCRIPTION |
| A5A4TP5 | 0360-0535 | 0 | | TERMINAL TEST POINT PCB | 00000 | ORDER BY DESCRIPTION |
| A5A4TP6 | 0360-0535 | 0 | | TERMINAL TEST POINT PCB | 00000 | ORDER BY DESCRIPTION |
| A5A4TP7 | 0360-0535 | 0 | | TERMINAL TEST POINT PCB | 00000 | ORDER BY DESCRIPTION |
| A5A4TP8 | 0360-0535 | 0 | | TERMINAL TEST POINT PCB | 00000 | ORDER BY DESCRIPTION |
| A5A4TP9 | 0360-0535 | 0 | | TERMINAL TEST POINT PCB | 00000 | ORDER BY DESCRIPTION |
| A5A4TP10 | 0360-0535 | 0 | | TERMINAL TEST POINT PCB | 00000 | ORDER BY DESCRIPTION |
| A5A4TP11 | 0360-0535 | 0 | | TERMINAL TEST POINT PCB | 00000 | ORDER BY DESCRIPTION |
| A5A4TP12 | 0360-0535 | 0 | | TERMINAL TEST POINT PCB | 00000 | ORDER BY DESCRIPTION |
| A5A4TP13 | 0360-0535 | 0 | | TERMINAL TEST POINT PCB | 00000 | ORDER BY DESCRIPTION |
| A5A4TP14 | 0360-0535 | 0 | | TERMINAL TEST POINT PCB | 00000 | ORDER BY DESCRIPTION |
| A5A4TP15 | 0360-0535 | 0 | | TERMINAL TEST POINT PCB | 00000 | ORDER BY DESCRIPTION |
| A5A4TP16 | 0360-0535 | 0 | | TERMINAL TEST POINT PCB | 00000 | ORDER BY DESCRIPTION |
| A5A4U1 | 1820-0694 | 9 | 1 | IC GATE TTL S EXCL-OR QUAD 2-INP | 01295 | SN74S86N |
| A5A4U2 | 1820-0684 | 7 | 1 | IC INV TTL S HEX 1-INP | 01295 | SN74S05N |
| A5A4U3 | 1820-1367 | 5 | 1 | IC GATE TTL S AND QUAD 2-INP | 01295 | SN74S08N |
| A5A4U4 | 1820-0682 | 5 | 1 | IC GATE TTL S NAND QUAD 2-INP | 01295 | SN74S03N |
| A5A4U5 | 1820-1144 | 6 | | IC GATE TTL LS NOR QUAD 2-INP | 01295 | SN74LS02N |
| A5A4U6 | 1820-0681 | 4 | 1 | IC GATE TTL S NAND QUAD 2-INP | 01295 | SN74S00N |
| A5A4U7 | 1820-1797 | 5 | 1 | IC DRVR TTL 2-INP | 27014 | DM0035CG |
| A5A4U8 | 1820-0883 | 6 | 1 | IC INV TTL S HEX 1-INP | 01295 | SN74S04N |
| A5A4U9 | 1820-1729 | 3 | 1 | IC LCH TTL LS COM CLEAR 8-BIT | 01295 | SN74LS259N |
| A5A4U10 | 1820-1423 | 4 | 1 | IC MV TTL LS MONOSTBL RETRIG DUAL | 01295 | SN74LS123N |
| A5A4VR1 | 1902-0533 | 9 | 2 | DIODE-ZNR 4.99V 2% DO-15 PD=1W TC=-.012% | 28480 | 1902-0533 |
| A5A4VR2 | 1902-0952 | 6 | 1 | DIODE-ZNR 5.6V 5% DO-35 PD=.4W TC=+.046% | 28480 | 1902-0952 |
| A5A4VR3 | 1902-0551 | 1 | 1 | DIODE-ZNR 6.2V 5% PD=1W IR=10UA | 28480 | 1902-0551 |
| A5A4VR4 | 1902-0948 | 0 | | DIODE-ZNR 3.9V 5% DO-35 PD=.4W TC=-.012% | 28480 | 1902-0948 |
| | 1200-0081 | 4 | 10 | INSULATOR-FLG-BSHG NYLON | 28480 | 1200-0081 |
| | 6040-0238 | 9 | 1 | LUBRICANT-GREASE SIL | 05820 | 120 |
| | 08673-20117 | 7 | 1 | BD PULSE DRVR | 28480 | 08673-20117 |
| A5A5 | 08673-60028 | 3 | 1 | DAC ENABLE BOARD ASSEMBLY | 28480 | 08673-60028 |
| A5A5C1 | 0160-4527 | 4 | 1 | CAPACITOR-FXD 56PF +-5% 200VDC CER 0+-30 | 28480 | 0160-4527 |
| A5A5C2 | 0160-2055 | 9 | | CAPACITOR-FXD .01UF +80-20% 100VDC CER | 28480 | 0160-2055 |
| A5A5C3 | 0160-0576 | 5 | | CAPACITOR-FXD .1UF +-20% 50VDC CER | 28480 | 0160-0576 |
| A5A5C4 | 0180-0116 | 1 | | CAPACITOR-FXD 6.8UF+-10% 35VDC TA | 56289 | 150D685X9035B2 |
| A5A5C5 | 0160-0576 | 5 | | CAPACITOR-FXD .1UF +-20% 50VDC CER | 28480 | 0160-0576 |
| A5A5C6 | 0160-3878 | 6 | | CAPACITOR-FXD 1000PF +-20% 100VDC CER | 28480 | 0160-3878 |
| A5A5C7 | 0160-0576 | 5 | | CAPACITOR-FXD .1UF +-20% 50VDC CER | 28480 | 0160-0576 |
| A5A5C8 | 0180-0197 | 8 | | CAPACITOR-FXD 2.2UF+-10% 20VDC TA | 56289 | 150D225X9020A2 |
| A5A5C9 | 0160-0576 | 5 | | CAPACITOR-FXD .1UF +-20% 50VDC CER | 28480 | 0160-0576 |
| A5A5C10 | 0180-0291 | 3 | | CAPACITOR-FXD 1UF+-10% 35VDC TA | 56289 | 150D105X9035A2 |
| A5A5C11 | 0160-0576 | 5 | | CAPACITOR-FXD .1UF +-20% 50VDC CER | 28480 | 0160-0576 |
| A5A5C12 | 0160-0576 | 5 | | CAPACITOR-FXD .1UF +-20% 50VDC CER | 28480 | 0160-0576 |
| A5A5C13 | 0160-0576 | 5 | | CAPACITOR-FXD .1UF +-20% 50VDC CER | 28480 | 0160-0576 |
| A5A5C14 | 0160-0576 | 5 | | CAPACITOR-FXD .1UF +-20% 50VDC CER | 28480 | 0160-0576 |
| A5A5C15 | 0160-0576 | 5 | | CAPACITOR-FXD .1UF +-20% 50VDC CER | 28480 | 0160-0576 |
| A5A5C16 | | | | NOT ASSIGNED | | |
| A5A5C17 | 0160-3878 | 6 | | CAPACITOR-FXD 1000PF +-20% 100VDC CER | 28480 | 0160-3878 |
| A5A5C18 | 0160-3878 | 6 | | CAPACITOR-FXD 1000PF +-20% 100VDC CER | 28480 | 0160-3878 |
| A5A5C19 | 0160-3877 | 5 | | CAPACITOR-FXD 100PF +-20% 200VDC CER | 28480 | 0160-3877 |
| A5A5C20 | 0160-3872 | 0 | 1 | CAPACITOR-FXD 2.2PF +-.25PF 200VDC CER | 28480 | 0160-3872 |
| A5A5C21 | 0180-0291 | 3 | | CAPACITOR-FXD 1UF+-10% 35VDC TA | 56289 | 150D105X9035A2 |
| A5A5C22 | 0180-0291 | 3 | | CAPACITOR-FXD 1UF+-10% 35VDC TA | 56289 | 150D105X9035A2 |
| A5A5C23 | 0160-0570 | 9 | | CAPACITOR-FXD 220PF +-20% 100VDC CER | 20932 | 5024EM100RD221M |
| A5A5C24 | 0160-0570 | 9 | | CAPACITOR-FXD 220PF +-20% 100VDC CER | 20932 | 5024EM100RD221M |
| A5A5C25 | 0160-0576 | 5 | | CAPACITOR-FXD .1UF +-20% 50VDC CER | 28480 | 0160-0576 |
| A5A5C26 | 0160-3878 | 6 | | CAPACITOR-FXD 1000PF +-20% 100VDC CER | 28480 | 0160-3878 |

See introduction to this section for ordering information
*Indicates factory selected value
†Backdating information in Section VII



www.valuetronics.com

Table 6-3. Replaceable Parts

| Reference Designation | HP Part Number | CD | Qty | Description | Mfr Code | Mfr Part Number |
|---|---|---|---|---|---|---|
| A5A5CR1 | 1901-0050 | 3 | | DIODE-SWITCHING 80V 200MA 2NS DO-35 | 28480 | 1901-0050 |
| A5A5CR2 | 1901-0050 | 3 | | DIODE-SWITCHING 80V 200MA 2NS DO-35 | 28480 | 1901-0050 |
| A5A5CR3 | 1901-0050 | 3 | | DIODE-SWITCHING 80V 200MA 2NS DO-35 | 28480 | 1901-0050 |
| A5A5MP1 | 1480-0073 | 6 | | PIN-ROLL .062-IN-DIA .25-IN-LG BE-CU | 28480 | 1480-0073 |
| A5A5MP2 | 4040-0748 | 3 | | EXTR-PC BD BLK POLYC .062-BD-THKNS | 28480 | 4040-0748 |
| A5A5MP3 | 4040-0753 | 0 | 1 | EXTR-PC BD GRN POLYC .062-BD-THKNS | 28480 | 4040-0753 |
| A5A5Q1 | 1853-0459 | 3 | | TRANSISTOR PNP SI PD=625MW FT=200MHZ | 28480 | 1853-0459 |
| A5A5Q2 | 1853-0459 | 3 | | TRANSISTOR PNP SI PD=625MW FT=200MHZ | 28480 | 1853-0459 |
| A5A5Q3 | 1854-0810 | 2 | | TRANSISTOR NPN SI PD=625MW FT=200MHZ | 28480 | 1854-0810 |
| A5A5Q4 | 1854-0810 | 2 | | TRANSISTOR NPN SI PD=625MW FT=200MHZ | 28480 | 1854-0810 |
| A5A5Q5 | 1853-0459 | 3 | | TRANSISTOR PNP SI PD=625MW FT=200MHZ | 28480 | 1853-0459 |
| A5A5Q6 | 1853-0459 | 3 | | TRANSISTOR PNP SI PD=625MW FT=200MHZ | 28480 | 1853-0459 |
| A5A5Q7 | 1855-0414 | 4 | | TRANSISTOR J-FET 2N4393 N-CHAN D-MODE | 04713 | 2N4393 |
| A5A5Q8 | 1855-0420 | 2 | 2 | TRANSISTOR J-FET 2N4391 N-CHAN D-MODE | 01295 | 2N4391 |
| A5A5Q9 | 1855-0420 | 2 | | TRANSISTOR J-FET 2N4391 N-CHAN D-MODE | 01295 | 2N4391 |
| A5A5Q10 | 1854-0809 | 9 | | TRANSISTOR NPN 2N2369A SI TO-18 PD=360MW | 28480 | 1854-0809 |
| A5A5Q11 | 1854-0637 | 1 | 10 | TRANSISTOR NPN 2N2219A SI TO-5 PD=800MW | 01295 | 2N2219A |
| A5A5Q12 | 1853-0314 | 9 | 2 | TRANSISTOR PNP 2N2905A SI TO-39 PD=600MW | 04713 | 2N2905A |
| A5A5Q13 | 1853-0459 | 3 | | TRANSISTOR PNP SI PD=625MW FT=200MHZ | 28480 | 1853-0459 |
| A5A5Q14 | 1854-0810 | 2 | | TRANSISTOR NPN SI PD=625MW FT=200MHZ | 28480 | 1854-0810 |
| A5A5R1 | 0698-3403 | 2 | 2 | RESISTOR 348 1% .5W F TC=0+-100 | 28480 | 0698-3403 |
| A5A5R2 | 0757-0444 | 1 | 3 | RESISTOR 12.1K 1% .125W F TC=0+-100 | 24546 | C4-1/8-T0-1212-F |
| A5A5R3 | 0698-3403 | 2 | | RESISTOR 348 1% .5W F TC=0+-100 | 28480 | 0698-3403 |
| A5A5R4 | 0757-0441 | 8 | | RESISTOR 8.25K 1% .125W F TC=0+-100 | 24546 | C4-1/8-T0-8251-F |
| A5A5R5 | 0757-0280 | 3 | | RESISTOR 1K 1% .125W F TC=0+-100 | 24546 | C4-1/8-T0-1001-F |
| A5A5R6 | 0698-3153 | 9 | 1 | RESISTOR 3.83K 1% .125W F TC=0+-100 | 24546 | C4-1/8-T0-3831-F |
| A5A5R7 | 0757-0797 | 7 | 1 | RESISTOR 90.9 1% .5W F TC=0+-100 | 28480 | 0757-0797 |
| A5A5R8 | 0698-3450 | 9 | | RESISTOR 42.2K 1% .125W F TC=0+-100 | 24546 | C4-1/8-T0-4222-F |
| A5A5R9 | 2100-3103 | 6 | 10 | RESISTOR-TRMR 10K 10% C SIDE-ADJ 17-TRN | 02111 | 43P103 |
| A5A5R10 | 0698-0084 | 9 | 1 | RESISTOR 2.15K 1% .125W F TC=0+-100 | 24546 | C4-1/8-T0-2151-F |
| A5A5R11 | 0757-1084 | 9 | | RESISTOR 1.47K 1% .125W F TC=0+-100 | 24546 | C4-1/8-T0-1471-F |
| A5A5R12 | 0811-3202 | 1 | 3 | RESISTOR 30.615K .1% .05W PWW TC=0+-10 | 14140 | 1409-1/40-30615R-B |
| A5A5R13 | 0698-0083 | 8 | | RESISTOR 1.96K 1% .125W F TC=0+-100 | 24546 | C4-1/8-T0-1961-F |
| A5A5R14 | 0698-0083 | 8 | | RESISTOR 1.96K 1% .125W F TC=0+-100 | 24546 | C4-1/8-T0-1961-F |
| A5A5R15 | 0811-3377 | 1 | 1 | RESISTOR 5.62K .1% .125W PWW TC=0+-10 | 28480 | 0811-3377 |
| A5A5R16 | 0698-3156 | 2 | | RESISTOR 14.7K 1% .125W F TC=0+-100 | 24546 | C4-1/8-T0-1472-F |
| A5A5R17 | 0698-3156 | 2 | | RESISTOR 14.7K 1% .125W F TC=0+-100 | 24546 | C4-1/8-T0-1472-F |
| A5A5R18 | 0698-0083 | 8 | | RESISTOR 1.96K 1% .125W F TC=0+-100 | 24546 | C4-1/8-T0-1961-F |
| A5A5R19 | 0698-0083 | 8 | | RESISTOR 1.96K 1% .125W F TC=0+-100 | 24546 | C4-1/8-T0-1961-F |
| A5A5R20 | 0698-0083 | 8 | | RESISTOR 1.96K 1% .125W F TC=0+-100 | 24546 | C4-1/8-T0-1961-F |
| A5A5R21 | 0698-0083 | 8 | | RESISTOR 1.96K 1% .125W F TC=0+-100 | 24546 | C4-1/8-T0-1961-F |
| A5A5R22 | 0698-0083 | 8 | | RESISTOR 1.96K 1% .125W F TC=0+-100 | 24546 | C4-1/8-T0-1961-F |
| A5A5R23 | 0698-0083 | 8 | | RESISTOR 1.96K 1% .125W F TC=0+-100 | 24546 | C4-1/8-T0-1961-F |
| A5A5R24 | 0757-0442 | 9 | | RESISTOR 10K 1% .125W F TC=0+-100 | 24546 | C4-1/8-T0-1002-F |
| A5A5R25 | 0757-0442 | 9 | | RESISTOR 10K 1% .125W F TC=0+-100 | 24546 | C4-1/8-T0-1002-F |
| A5A5R26 | 0698-0083 | 8 | | RESISTOR 1.96K 1% .125W F TC=0+-100 | 24546 | C4-1/8-T0-1961-F |
| A5A5R27 | 0698-3154 | 0 | 1 | RESISTOR 4.22K 1% .125W F TC=0+-100 | 24546 | C4-1/8-T0-4221-F |
| A5A5R28 | 0698-7284 | 5 | | RESISTOR 100K 1% .05W F TC=0+-100 | 24546 | C3-1/8-T0-1003-F |
| A5A5R29 | 0757-0465 | 8 | | RESISTOR 100K 1% .125W F TC=0+-100 | 24546 | C4-1/8-T0-1003-F |
| A5A5R30 | 0757-0280 | 3 | | RESISTOR 1K 1% .125W F TC=0+-100 | 24546 | C4-1/8-T0-1001-F |
| A5A5R31 | 0811-3374 | 8 | 2 | RESISTOR 23.7K .1% .05W PWW TC=0+-10 | 28480 | 0811-3374 |
| A5A5R32 | 0811-3374 | 8 | | RESISTOR 23.7K .1% .05W PWW TC=0+-10 | 28480 | 0811-3374 |
| A5A5R33 | 0698-7263 | 0 | 1 | RESISTOR 13.3K 1% .05W F TC=0+-100 | 24546 | C3-1/8-T0-1332-F |
| A5A5R34 | 0698-7188 | 8 | | RESISTOR 10 1% .05W F TC=0+-100 | 24546 | C3-1/8-T0-10R-F |
| A5A5R35 | 0757-0346 | 2 | | RESISTOR 10 1% .125W F TC=0+-100 | 24546 | C4-1/8-T0-10R0-F |
| A5A5R36 | 0811-3202 | 1 | | RESISTOR 30.615K .1% .05W PWW TC=0+-10 | 14140 | 1409-1/40-30615R-B |
| A5A5R37 | 0757-0444 | 1 | | RESISTOR 12.1K 1% .125W F TC=0+-100 | 24546 | C4-1/8-T0-1212-F |
| A5A5R38 | 0698-3136 | 8 | 2 | RESISTOR 17.8K 1% .125W F TC=0+-100 | 24546 | C4-1/8-T0-1782-F |
| A5A5R39 | 0757-0444 | 1 | | RESISTOR 12.1K 1% .125W F TC=0+-100 | 24546 | C4-1/8-T0-1212-F |
| A5A5R40 | 0757-0459 | 8 | 1 | RESISTOR 56.2K 1% .125W F TC=0+-100 | 24546 | C4-1/8-T0-5622-F |
| A5A5R41 | 0757-0440 | 7 | 1 | RESISTOR 7.5K 1% .125W F TC=0+-100 | 24546 | C4-1/8-T0-7501-F |
| A5A5R42 | 0698-7196 | 8 | 2 | RESISTOR 21.5 1% .05W F TC=0+-100 | 24546 | C3-1/8-T0-21R5-F |
| A5A5R43 | 0698-7196 | 8 | | RESISTOR 21.5 1% .05W F TC=0+-100 | 24546 | C3-1/8-T0-21R5-F |
| A5A5R44 | 0757-0199 | 3 | 2 | RESISTOR 21.5K 1% .125W F TC=0+-100 | 24546 | C4-1/8-T0-2152-F |
| A5A5R45 | 0698-3450 | 9 | | RESISTOR 42.2K 1% .125W F TC=0+-100 | 24546 | C4-1/8-T0-4222-F |

A5

See introduction to this section for ordering information
*Indicates factory selected value
†Backdating information in Section VII



www.valuetronics.com

Table 6-3. Replaceable Parts

| Reference Designation | HP Part Number | C D | Qty | Description | Mfr Code | Mfr Part Number |
|---|---|---|---|---|---|---|
| A5A5R46 | 0698-7212 | 9 | | RESISTOR 100 1% .05W F TC=0+-100 | 24546 | C3-1/8-T0-100R-F |
| A5A5R47 | 2100-3103 | 6 | | RESISTOR-TRMR 10K 10% C SIDE-ADJ 17-TRN | 02111 | 43P103 |
| A5A5R48 | 0698-8061 | 8 | 1 | RESISTOR 8.25K .1% .125W F TC=0+-25 | 19701 | MF4C1/8-T9-8251-B |
| A5A5R49 | 0757-0428 | 1 | | RESISTOR 1.62K 1% .125W F TC=0+-100 | 24546 | C4-1/8-T0-1621-F |
| A5A5R50 | 0757-0447 | 4 | | RESISTOR 16.2K 1% .125W F TC=0+-100 | 24546 | C4-1/8-T0-1622-F |
| A5A5R51 | 0757-0458 | 7 | | RESISTOR 51.1K 1% .125W F TC=0+-100 | 24546 | C4-1/8-T0-5112-F |
| A5A5R52 | 0757-0279 | 0 | | RESISTOR 3.16K 1% .125W F TC=0+-100 | 24546 | C4-1/8-T0-3161-F |
| A5A5R53 | 0757-0447 | 4 | | RESISTOR 16.2K 1% .125W F TC=0+-100 | 24546 | C4-1/8-T0-1622-F |
| A5A5R54 | 0757-0458 | 7 | | RESISTOR 51.1K 1% .125W F TC=0+-100 | 24546 | C4-1/8-T0-5112-F |
| A5A5R55 | 0757-0438 | 3 | | RESISTOR 5.11K 1% .125W F TC=0+-100 | 24546 | C4-1/8-T0-5111-F |
| A5A5R56 | 0757-0468 | 7 | 1 | RESISTOR 110K 1% .125W F TC=0+-100 | 24546 | C4-1/8-T0-1103-F |
| A5A5R57 | 0698-0085 | 0 | | RESISTOR 2.61K 1% .125W F TC=0+-100 | 24546 | C4-1/8-T0-2611-F |
| A5A5R58 | 0757-0438 | 3 | | RESISTOR 5.11K 1% .125W F TC=0+-100 | 24546 | C4-1/8-T0-5111-F |
| A5A5R59 | 0698-3450 | 8 | | RESISTOR 42.2K 1% .125W F TC=0+-100 | 24546 | C4-1/8-T0-4222-F |
| A5A5R60 | 2100-3103 | 6 | | RESISTOR-TRMR 10K 10% C SIDE-ADJ 17-TRN | 02111 | 43P103 |
| A5A5R61 | 0757-0395 | 1 | 1 | RESISTOR 56.2 1% .125W F TC=0+-100 | 24546 | C4-1/8-T0-56R2-F |
| A5A5R62 | 0757-0458 | 7 | | RESISTOR 51.1K 1% .125W F TC=0+-100 | 24546 | C4-1/8-T0-5112-F |
| A5A5R63 | 0698-3161 | 9 | 1 | RESISTOR 38.3K 1% .125W F TC=0+-100 | 24546 | C4-1/8-T0-3832-F |
| A5A5TP1 | 1251-0600 | 0 | | CONNECTOR-SGL CONT PIN 1.14-MM-BSC-SZ SQ | 28480 | 1251-0600 |
| A5A5TP2 | 1251-0600 | 0 | | CONNECTOR-SGL CONT PIN 1.14-MM-BSC-SZ SQ | 28480 | 1251-0600 |
| A5A5TP3 | 1251-0600 | 0 | | CONNECTOR-SGL CONT PIN 1.14-MM-BSC-SZ SQ | 28480 | 1251-0600 |
| A5A5TP4 | 1251-0600 | 0 | | CONNECTOR-SGL CONT PIN 1.14-MM-BSC-SZ SQ | 28480 | 1251-0600 |
| A5A5TP5 | 1251-0600 | 0 | | CONNECTOR-SGL CONT PIN 1.14-MM-BSC-SZ SQ | 28480 | 1251-0600 |
| A5A5TP6 | 1251-0600 | 0 | | CONNECTOR-SGL CONT PIN 1.14-MM-BSC-SZ SQ | 28480 | 1251-0600 |
| A5A5TP7 | 1251-0600 | 0 | | CONNECTOR-SGL CONT PIN 1.14-MM-BSC-SZ SQ | 28480 | 1251-0600 |
| A5A5TP8 | 1251-0600 | 0 | | CONNECTOR-SGL CONT PIN 1.14-MM-BSC-SZ SQ | 28480 | 1251-0600 |
| A5A5TP9 | 1251-0600 | 0 | | CONNECTOR-SGL CONT PIN 1.14-MM-BSC-SZ SQ | 28480 | 1251-0600 |
| A5A5TP10 | 1251-0600 | 0 | | CONNECTOR-SGL CONT PIN 1.14-MM-BSC-SZ SQ | 28480 | 1251-0600 |
| A5A5U1 | 1826-0972 | 8 | 1 | IC-DAC 10-BIT | 28480 | 1826-0972 |
| A5A5U2 | 1826-0798 | 6 | 2 | IC CONV 8-B-D/A | 18324 | NE5018F |
| A5A5U3 | 1820-1445 | 0 | | IC LCH TTL LS 4-BIT | 01295 | SN74LS375N |
| A5A5U4 | 1826-0798 | 6 | | IC CONV 8-B-D/A | 18324 | NE5018F |
| A5A5U5 | 1826-0025 | 2 | 1 | IC OP AMP LOW-DRIFT TO-99 PKG | 27014 | LM208AH |
| A5A5U6 | 1826-0217 | 4 | 1 | IC OP AMP GP DUAL TO-99 PKG | 07933 | RC4558T |
| A5A5U7 | 1826-0026 | 3 | | IC COMPARATOR PRCN TO-99 PKG | 01295 | LM311L |
| A5A5U8 | 1820-0495 | 8 | 1 | IC DCDR TTL 4-TO-16-LINE 4-INP | 01295 | SN74154N |
| A5A5U9 | 1820-1917 | 1 | 1 | IC BFR TTL LS LINE DRVR OCTL | 01295 | SN74LS240N |
| A5A5U10 | 1826-0191 | 3 | 1 | IC COMPARATOR GP DUAL TO-100 PKG | 27014 | LM319H |
| A5A5U11 | 1826-0059 | 2 | | IC OP AMP GP TO-99 PKG | 01295 | LH201AL |
| A5A5U12 | 1820-1208 | 3 | 2 | IC GATE TTL LS OR QUAD 2-INP | 01295 | SN74LS32N |
| A5A6 | 86730-60002 | 7 | 1 | BD AY SW DRIVER | 28480 | 86730-60002 |
| A5A6C1 | 0160-4830 | 2 | 4 | CAPACITOR-FXD 2200PF +-10% 100VDC CER | 28480 | 0160-4830 |
| A5A6C2 | 0160-4830 | 2 | | CAPACITOR-FXD 2200PF +-10% 100VDC CER | 28480 | 0160-4830 |
| A5A6C3 | 0160-4830 | 2 | | CAPACITOR-FXD 2200PF +-10% 100VDC CER | 28480 | 0160-4830 |
| A5A6C4 | 0160-4830 | 2 | | CAPACITOR-FXD 2200PF +-10% 100VDC CER | 28480 | 0160-4830 |
| A5A6C5 | 0180-2141 | 6 | | CAPACITOR-FXD 3.3UF+-10% 50VDC TA | 56289 | 150D335X9050B2 |
| A5A6C6 | 0180-2141 | 6 | | CAPACITOR-FXD 3.3UF+-10% 50VDC TA | 56289 | 150D335X9050B2 |
| A5A6C7 | 0180-2141 | 6 | | CAPACITOR-FXD 3.3UF+-10% 50VDC TA | 56289 | 150D335X9050B2 |
| A5A6C8 | 0180-0374 | 3 | | CAPACITOR-FXD 10UF+-10% 20VDC TA | 56289 | 150D106X9020B2 |
| A5A6C9 | 0160-4835 | 7 | 11 | CAPACITOR-FXD .1UF +-10% 50VDC CER | 28480 | 0160-4835 |
| A5A6C10 | 0160-4835 | 7 | | CAPACITOR-FXD .1UF +-10% 50VDC CER | 28480 | 0160-4835 |
| A5A6C11 | 0160-4835 | 7 | | CAPACITOR-FXD .1UF +-10% 50VDC CER | 28480 | 0160-4835 |
| A5A6C12 | 0160-4835 | 7 | | CAPACITOR-FXD .1UF +-10% 50VDC CER | 28480 | 0160-4835 |
| A5A6C13 | 0160-0576 | 5 | | CAPACITOR-FXD .1UF +-20% 50VDC CER | 28480 | 0160-0576 |
| A5A6C14 | 0160-0576 | 5 | | CAPACITOR-FXD .1UF +-20% 50VDC CER | 28480 | 0160-0576 |
| A5A6C15 | 0160-4835 | 7 | | CAPACITOR-FXD .1UF +-10% 50VDC CER | 28480 | 0160-4835 |
| A5A6C16 | 0160-0576 | 5 | | CAPACITOR-FXD .1UF +-20% 50VDC CER | 28480 | 0160-0576 |
| A5A6C17 | 0160-0576 | 5 | | CAPACITOR-FXD .1UF +-20% 50VDC CER | 28480 | 0160-0576 |
| A5A6CR1 | 1901-0050 | 3 | | DIODE-SWITCHING 80V 200MA 2NS DO-35 | 28480 | 1901-0050 |
| A5A6CR2 | 1901-0050 | 3 | | DIODE-SWITCHING 80V 200MA 2NS DO-35 | 28480 | 1901-0050 |
| A5A6CR3 | 1901-0050 | 3 | | DIODE-SWITCHING 80V 200MA 2NS DO-35 | 28480 | 1901-0050 |
| A5A6CR4 | 1901-0050 | 3 | | DIODE-SWITCHING 80V 200MA 2NS DO-35 | 28480 | 1901-0050 |
| A5A6CR5 | 1901-0050 | 3 | | DIODE-SWITCHING 80V 200MA 2NS DO-35 | 28480 | 1901-0050 |

A5

See introduction to this section for ordering information
*Indicates factory selected value
†Backdating information in Section VII



www.valuetronics.com

Table 6-3. Replaceable Parts

| Reference Designation | HP Part Number | C D | Qty | Description | Mfr Code | Mfr Part Number |
|---|---|---|---|---|---|---|
| A5A6CR6 | 1901-0050 | 3 | | DIODE-SWITCHING 80V 200MA 2NS DO-35 | 28480 | 1901-0050 |
| A5A6CR7 | 1901-0050 | 3 | | DIODE-SWITCHING 80V 200MA 2NS DO-35 | 28480 | 1901-0050 |
| A5A6CR8 | 1901-0050 | 3 | | DIODE-SWITCHING 80V 200MA 2NS DO-35 | 28480 | 1901-0050 |
| A5A6CR9 | 1901-0050 | 3 | | DIODE-SWITCHING 80V 200MA 2NS DO-35 | 28480 | 1901-0050 |
| A5A6CR10 | 1901-0050 | 3 | | DIODE-SWITCHING 80V 200MA 2NS DO-35 | 28480 | 1901-0050 |
| A5A6CR11 | 1901-0050 | 3 | | DIODE-SWITCHING 80V 200MA 2NS DO-35 | 28480 | 1901-0050 |
| A5A6CR12 | 1901-0050 | 3 | | DIODE-SWITCHING 80V 200MA 2NS DO-35 | 28480 | 1901-0050 |
| A5A6CR13 | 1901-0050 | 3 | | DIODE-SWITCHING 80V 200MA 2NS DO-35 | 28480 | 1901-0050 |
| A5A6CR14 | 1901-0050 | 3 | | DIODE-SWITCHING 80V 200MA 2NS DO-35 | 28480 | 1901-0050 |
| A5A6CR15 | 1901-0050 | 3 | | DIODE-SWITCHING 80V 200MA 2NS DO-35 | 28480 | 1901-0050 |
| A5A6CR16 | 1901-0050 | 3 | | DIODE-SWITCHING 80V 200MA 2NS DO-35 | 28480 | 1901-0050 |
| A5A6CR17 | 1901-0050 | 3 | | DIODE-SWITCHING 80V 200MA 2NS DO-35 | 28480 | 1901-0050 |
| A5A6MP1 | 1200-0173 | 5 | 8 | INSULATOR-XSTR DAP-GL | 28480 | 1200-0173 |
| A5A6MP2 | 1480-0073 | 6 | | PIN-ROLL .062-IN-DIA .25-IN-LG BE-CU | 28480 | 1480-0073 |
| A5A6MP3 | 4040-0754 | 1 | 1 | EXTR-PC BD BLU POLYC .062-BD-THKNS | 28490 | 4040-0754 |
| A5A6Q1 | 1854-0810 | 2 | | TRANSISTOR NPN SI PD=625MW FT=200MHZ | 28480 | 1854-0810 |
| A5A6Q2 | 1854-0810 | 2 | | TRANSISTOR NPN SI PD=625MW FT=200MHZ | 28480 | 1854-0810 |
| A5A6Q3 | 1854-0810 | 2 | | TRANSISTOR NPN SI PD=625MW FT=200MHZ | 28480 | 1854-0810 |
| A5A6Q4 | 1854-0810 | 2 | | TRANSISTOR NPN SI PD=625MW FT=200MHZ | 28480 | 1854-0810 |
| A5A6Q5 | 1854-0810 | 2 | | TRANSISTOR NPN SI PD=625MW FT=200MHZ | 28480 | 1854-0810 |
| A5A6Q6 | 1854-0810 | 2 | | TRANSISTOR NPN SI PD=625MW FT=200MHZ | 28480 | 1854-0810 |
| A5A6Q7 | 1854-0810 | 2 | | TRANSISTOR NPN SI PD=625MW FT=200MHZ | 28480 | 1854-0810 |
| A5A6Q8 | 1854-0810 | 2 | | TRANSISTOR NPN SI PD=625MW FT=200MHZ | 28480 | 1854-0810 |
| A5A6Q9 | 1854-0637 | 1 | | TRANSISTOR NPN 2N2219A SI TO-5 PD=800MW | 01295 | 2N2219A |
| A5A6Q10 | 1855-0414 | 4 | | TRANSISTOR J-FET 2N4393 N-CHAN D-MODE | 04713 | 2N4393 |
| A5A6Q11 | 1854-0637 | 1 | | TRANSISTOR NPN 2N2219A SI TO-5 PD=800MW | 01295 | 2N2219A |
| A5A6Q12 | 1854-0637 | 1 | | TRANSISTOR NPN 2N2219A SI TO-5 PD=800MW | 01295 | 2N2219A |
| A5A6Q13 | 1854-0637 | 1 | | TRANSISTOR NPN 2N2219A SI TO-5 PD=800MW | 01295 | 2N2219A |
| A5A6Q14 | 1854-0637 | 1 | | TRANSISTOR NPN 2N2219A SI TO-5 PD=800MW | 01295 | 2N2219A |
| A5A6Q15 | 1854-0637 | 1 | | TRANSISTOR NPN 2N2219A SI TO-5 PD=800MW | 01295 | 2N2219A |
| A5A6Q16 | 1855-0414 | 4 | | TRANSISTOR J-FET 2N4393 N-CHAN D-MODE | 04713 | 2N4393 |
| A5A6Q17 | 1854-0637 | 1 | | TRANSISTOR NPN 2N2219A SI TO-5 PD=800MW | 01295 | 2N2219A |
| A5A6Q18 | 1854-0637 | 1 | | TRANSISTOR NPN 2N2219A SI TO-5 PD=800MW | 01295 | 2N2219A |
| A5A6Q19 | 1854-0810 | 2 | | TRANSISTOR NPN SI PD=625MW FT=200MHZ | 28480 | 1854-0810 |
| A5A6Q20 | 1853-0459 | 3 | | TRANSISTOR PNP SI PD=625MW FT=200MHZ | 28480 | 1853-0459 |
| A5A6Q21 | 1853-0459 | 3 | | TRANSISTOR PNP SI PD=625MW FT=200MHZ | 28480 | 1853-0459 |
| A5A6Q22 | 1853-0459 | 3 | | TRANSISTOR PNP SI PD=625MW FT=200MHZ | 28480 | 1853-0459 |
| A5A6Q23 | 1854-0810 | 2 | | TRANSISTOR NPN SI PD=625MW FT=200MHZ | 28480 | 1854-0810 |
| A5A6Q24 | 1854-0810 | 2 | | TRANSISTOR NPN SI PD=625MW FT=200MHZ | 28480 | 1854-0810 |
| A5A6Q25 | 1854-0810 | 2 | | TRANSISTOR NPN SI PD=625MW FT=200MHZ | 28480 | 1854-0810 |
| A5A6R1 | 0698-3430 | 5 | | RESISTOR 21.5 1% .125W F TC=0+-100 | 03888 | PME55-1/8-T0-21R5-F |
| A5A6R2 | 0698-3430 | 5 | | RESISTOR 21.5 1% .125W F TC=0+-100 | 03888 | PME55-1/8-T0-21R5-F |
| A5A6R3 | 0698-3430 | 5 | | RESISTOR 21.5 1% .125W F TC=0+-100 | 03888 | PME55-1/8-T0-21R5-F |
| A5A6R4 | 0698-3430 | 5 | | RESISTOR 21.5 1% .125W F TC=0+-100 | 03888 | PME55-1/8-T0-21R5-F |
| A5A6R5 | 0698-3160 | 8 | | RESISTOR 31.6K 1% .125W F TC=0+-100 | 24546 | C4-1/8-T0-3162-F |
| A5A6R6 | 0757-0421 | 4 | | RESISTOR 825 1% .125W F TC=0+-100 | 24546 | C4-1/8-T0-825R-F |
| A5A6R7 | 0757-0442 | 9 | | RESISTOR 10K 1% .125W F TC=0+-100 | 24546 | C4-1/8-T0-1002-F |
| A5A6R8 | 0757-0288 | 1 | 4 | RESISTOR 9.09K 1% .125W F TC=0+-100 | 19701 | MF4C1/8-T0-9091-F |
| A5A6R9 | 0757-0289 | 2 | 4 | RESISTOR 13.3K 1% .125W F TC=0+-100 | 19701 | MF4C1/8-T0-1332-F |
| A5A6R10 | 0698-3156 | 2 | | RESISTOR 14.7K 1% .125W F TC=0+-100 | 24546 | C4-1/8-T0-1472-F |
| A5A6R11 | 0698-3156 | 2 | | RESISTOR 14.7K 1% .125W F TC=0+-100 | 24546 | C4-1/8-T0-1472-F |
| A5A6R12 | 0698-3156 | 2 | | RESISTOR 14.7K 1% .125W F TC=0+-100 | 24546 | C4-1/8-T0-1472-F |
| A5A6R13 | 0698-3155 | 1 | | RESISTOR 4.64K 1% .125W F TC=0+-100 | 24546 | C4-1/8-T0-4641-F |
| A5A6R14 | 0698-3155 | 1 | | RESISTOR 4.64K 1% .125W F TC=0+-100 | 24546 | C4-1/8-T0-4641-F |
| A5A6R15 | 0698-3155 | 1 | | RESISTOR 4.64K 1% .125W F TC=0+-100 | 24546 | C4-1/8-T0-4641-F |
| A5A6R16 | 0698-3155 | 1 | | RESISTOR 4.64K 1% .125W F TC=0+-100 | 24546 | C4-1/8-T0-4641-F |
| A5A6R17 | 0698-3441 | 8 | | RESISTOR 215 1% .125W F TC=0+-100 | 24546 | C4-1/8-T0-215R-F |
| A5A6R18 | 0698-3441 | 8 | | RESISTOR 215 1% .125W F TC=0+-100 | 24546 | C4-1/8-T0-215R-F |
| A5A6R19 | 0698-3441 | 8 | | RESISTOR 215 1% .125W F TC=0+-100 | 24546 | C4-1/8-T0-215R-F |
| A5A6R20 | 0698-3441 | 8 | | RESISTOR 215 1% .125W F TC=0+-100 | 24546 | C4-1/8-T0-215R-F |
| A5A6R21 | 0757-0442 | 9 | | RESISTOR 10K 1% .125W F TC=0+-100 | 24546 | C4-1/8-T0-1002-F |
| A5A6R22 | 0757-0442 | 9 | | RESISTOR 10K 1% .125W F TC=0+-100 | 24546 | C4-1/8-T0-1002-F |
| A5A6R23 | 0757-0442 | 9 | | RESISTOR 10K 1% .125W F TC=0+-100 | 24546 | C4-1/8-T0-1002-F |
| A5A6R24 | 0757-0438 | 3 | | RESISTOR 5.11K 1% .125W F TC=0+-100 | 24546 | C4-1/8-T0-5111-F |
| A5A6R25 | 0757-0438 | 3 | | RESISTOR 5.11K 1% .125W F TC=0+-100 | 24546 | C4-1/8-T0-5111-F |

A5

See introduction to this section for ordering information
*Indicates factory selected value
†Backdating information in Section VII



www.valuetronics.com

Table 6-3. Replaceable Parts

| Reference Designation | HP Part Number | C D | Qty | Description | Mfr Code | Mfr Part Number |
|---|---|---|---|---|---|---|
| A5A6R26 | 0757-0438 | 3 | | RESISTOR 5.11K 1% .125W F TC=0+-100 | 24546 | C4-1/8-T0-5111-F |
| A5A6R27 | 0757-0438 | 3 | | RESISTOR 5.11K 1% .125W F TC=0+-100 | 24546 | C4-1/8-T0-5111-F |
| A5A6R28 | 0698-3155 | 1 | | RESISTOR 4.64K 1% .125W F TC=0+-100 | 24546 | C4-1/8-T0-4641-F |
| A5A6R29 | 0698-3155 | 1 | | RESISTOR 4.64K 1% .125W F TC=0+-100 | 24546 | C4-1/8-T0-4641-F |
| A5A6R30 | 0698-3155 | 1 | | RESISTOR 4.64K 1% .125W F TC=0+-100 | 24546 | C4-1/8-T0-4641-F |
| A5A6R31 | 0698-3155 | 1 | | RESISTOR 4.64K 1% .125W F TC=0+-100 | 24546 | C4-1/8-T0-4641-F |
| A5A6R32 | 0698-3441 | 8 | | RESISTOR 215 1% .125W F TC=0+-100 | 24546 | C4-1/8-T0-215R-F |
| A5A6R33 | 0698-3441 | 8 | | RESISTOR 215 1% .125W F TC=0+-100 | 24546 | C4-1/8-T0-215R-F |
| A5A6R34 | 0698-3441 | 8 | | RESISTOR 215 1% .125W F TC=0+-100 | 24546 | C4-1/8-T0-215R-F |
| A5A6R35 | 0698-3441 | 8 | | RESISTOR 215 1% .125W F TC=0+-100 | 24546 | C4-1/8-T0-215R-F |
| A5A6R36 | 0757-0438 | 3 | | RESISTOR 5.11K 1% .125W F TC=0+-100 | 24546 | C4-1/8-T0-5111-F |
| A5A6R37 | 0757-0438 | 3 | | RESISTOR 5.11K 1% .125W F TC=0+-100 | 24546 | C4-1/8-T0-5111-F |
| A5A6R38 | 0757-0438 | 3 | | RESISTOR 5.11K 1% .125W F TC=0+-100 | 24546 | C4-1/8-T0-5111-F |
| A5A6R39 | 0757-0438 | 3 | | RESISTOR 5.11K 1% .125W F TC=0+-100 | 24546 | C4-1/8-T0-5111-F |
| A5A6R40 | 0757-0441 | 8 | | RESISTOR 8.25K 1% .125W F TC=0+-100 | 24546 | C4-1/8-T0-8251-F |
| A5A6R41 | 0698-3155 | 1 | | RESISTOR 4.64K 1% .125W F TC=0+-100 | 24546 | C4-1/8-T0-4641-F |
| A5A6R42 | 0757-0290 | 5 | | RESISTOR 6.19K 1% .125W F TC=0+-100 | 19701 | MF4C1/8-T0-6191-F |
| A5A6R43 | 2100-0567 | 0 | 1 | RESISTOR-TRMR 2K 10% C TOP-ADJ 1 TRN | 28480 | 2100-0567 |
| A5A6R44 | 0757-0288 | 1 | | RESISTOR 9.09K 1% .125W F TC=0+-100 | 19701 | MF4C1/8-T0-9091-F |
| A5A6R45 | 0698-7219 | 6 | 1 | RESISTOR 196 1% .05W F TC=0+-100 | 24546 | C3-1/8-T0-196R-F |
| A5A6R46 | 0698-7256 | 1 | 1 | RESISTOR 6.81K 1% .05W F TC=0+-100 | 24546 | C3-1/8-T0-6811-F |
| A5A6R47 | 0757-0289 | 2 | | RESISTOR 13.3K 1% .125W F TC=0+-100 | 19701 | MF4C1/8-T0-1332-F |
| A5A6R48 | 2100-0558 | 9 | 1 | RESISTOR-TRMR 20K 10% C TOP-ADJ 1-TRN | 28480 | 2100-0558 |
| A5A6R49 | 2100-3210 | 6 | 1 | RESISTOR-TRMR 10K 10% C TOP-ADJ 1-TRN | 28480 | 2100-3210 |
| A5A6R50 | 0698-3156 | 2 | | RESISTOR 14.7K 1% .125W F TC=0+-100 | 24546 | C4-1/8-T0-1472-F |
| A5A6R51 | 0757-0199 | 3 | | RESISTOR 21.5K 1% .125W F TC=0+-100 | 24546 | C4-1/8-T0-2152-F |
| A5A6R52 | 0757-0278 | 9 | 1 | RESISTOR 1.78K 1% .125W F TC=0+-100 | 24546 | C4-1/8-T0-1781-F |
| A5A6R53 | 0757-1094 | 9 | | RESISTOR 1.47K 1% .125W F TC=0+-100 | 24546 | C4-1/8-T0-1471-F |
| A5A6R54 | 0698-7262 | 9 | | RESISTOR 12.1K 1% .05W F TC=0+-100 | 24546 | C3-1/8-T0-1212-F |
| A5A6R55 | 0757-0443 | 0 | 1 | RESISTOR 11K 1% .125W F TC=0+-100 | 24546 | C4-1/8-T0-1102-F |
| A5A6R56 | 0757-0346 | 2 | | RESISTOR 10 1% .125W F TC=0+-100 | 24546 | C4-1/8-T0-10R0-F |
| A5A6R57 | 0757-0346 | 2 | | RESISTOR 10 1% .125W F TC=0+-100 | 24546 | C4-1/8-T0-10R0-F |
| A5A6R58 | 0757-0346 | 2 | | RESISTOR 10 1% .125W F TC=0+-100 | 24546 | C4-1/8-T0-10R0-F |
| A5A6R59 | 2100-3252 | 6 | 1 | RESISTOR-TRMR 5K 10% C TOP-ADJ 1-TRN | 28480 | 2100-3252 |
| A5A6R60 | 0757-0401 | 0 | | RESISTOR 100 1% .125W F TC=0+-100 | 24546 | C4-1/8-T0-101-F |
| A5A6TP1 | 0360-0535 | 0 | | TERMINAL TEST POINT PCB | 00000 | ORDER BY DESCRIPTION |
| A5A6TP2 | 0360-0535 | 0 | | TERMINAL TEST POINT PCB | 00000 | ORDER BY DESCRIPTION |
| A5A6U1 | 1820-1445 | 0 | | IC LCH TTL LS 4-BIT | 01295 | SN74LS375N |
| A5A6U2 | 1820-1445 | 0 | | IC LCH TTL LS 4-BIT | 01295 | SN74LS375N |
| A5A6U3 | 1820-1445 | 0 | | IC LCH TTL LS 4-BIT | 01295 | SN74LS375N |
| A5A6U4 | 1820-1445 | 0 | | IC LCH TTL LS 4-BIT | 01295 | SN74LS375N |
| A5A6U5 | 1826-0574 | 6 | 1 | IC OP AMP LOW-DRIFT TO-99 PKG | 07263 | UA714LHC |
| A5A6U6 | 1826-0323 | 3 | 1 | IC OP AMP GP QUAD 14-DIP-C PKG | 28480 | 1826-0323 |
| A5A6VR1 | 1902-0958 | 2 | 2 | DIODE-ZNR 10V 5% DO-35 PD=.4W TC=+.075% | 28480 | 1902-0958 |
| A5A7 | 08673-60032 | 9 | 1 | YTM DRIVER BOARD ASSEMBLY | 28480 | 08673-60032 |
| A5A7C1 | 0180-0291 | 3 | | CAPACITOR-FXD 1UF+-10% 35VDC TA | 56289 | 150D105X9035A2 |
| A5A7C2 | 0180-2141 | 6 | | CAPACITOR-FXD 3.3UF+-10% 50VDC TA | 56289 | 150D335X9050B2 |
| A5A7C3 | 0180-0291 | 3 | | CAPACITOR-FXD 1UF+-10% 35VDC TA | 56289 | 150D105X9035A2 |
| A5A7C4 | 0180-2141 | 6 | | CAPACITOR-FXD 3.3UF+-10% 50VDC TA | 56289 | 150D335X9050B2 |
| A5A7C5 | 0160-4103 | 2 | | CAPACITOR-FXD 220PF +-5% 100VDC CER | 72982 | 8121-M100-C0G-221J |
| A5A7C6 | 0180-0197 | 8 | | CAPACITOR-FXD 2.2UF+-10% 20VDC TA | 56289 | 150D225X9020A2 |
| A5A7C7 | 0160-4387 | 4 | | CAPACITOR-FXD 47PF +-5% 200VDC CER 0+-30 | 28480 | 0160-4387 |
| A5A7C8 | 0180-0291 | 3 | | CAPACITOR-FXD 1UF+-10% 35VDC TA | 56289 | 150D105X9035A2 |
| A5A7C9 | 0160-0576 | 5 | | CAPACITOR-FXD .1UF +-20% 50VDC CER | 28480 | 0160-0576 |
| A5A7C10 | 0160-4387 | 4 | | CAPACITOR-FXD 47PF +-5% 200VDC CER 0+-30 | 28480 | 0160-4387 |
| A5A7C11 | 0160-2055 | 9 | | CAPACITOR-FXD .01UF +80-20% 100VDC CER | 28480 | 0160-2055 |
| A5A7C12 | 0160-2055 | 9 | | CAPACITOR-FXD .01UF +80-20% 100VDC CER | 28480 | 0160-2055 |
| A5A7C13 | 0160-4387 | 4 | | CAPACITOR-FXD 47PF +-5% 200VDC CER 0+-30 | 28480 | 0160-4387 |
| A5A7C14 | 0160-3491 | 9 | 1 | CAPACITOR-FXD .47UF +-20% 50VDC CER | 28480 | 0160-3491 |
| A5A7C15 | 0160-0576 | 5 | | CAPACITOR-FXD .1UF +-20% 50VDC CER | 28480 | 0160-0576 |
| A5A7C16 | 0160-4387 | 4 | | CAPACITOR-FXD 47PF +-5% 200VDC CER 0+-30 | 28480 | 0160-4387 |
| A5A7C17 | 0160-2055 | 9 | | CAPACITOR-FXD .01UF +80-20% 100VDC CER | 28480 | 0160-2055 |
| A5A7C18 | 0160-4387 | 4 | | CAPACITOR-FXD 47PF +-5% 200VDC CER 0+-30 | 28480 | 0160-4387 |
| A5A7C19 | 0160-2055 | 9 | | CAPACITOR-FXD .01UF +80-20% 100VDC CER | 28480 | 0160-2055 |
| A5A7C20 | 0160-4387 | 4 | | CAPACITOR-FXD 47PF +-5% 200VDC CER 0+-30 | 28480 | 0160-4387 |

A5

See introduction to this section for ordering information
*Indicates factory selected value
†Backdating information in Section VII



www.valuetronics.com

Table 6-3. Replaceable Parts

| Reference Designation | HP Part Number | C D | Qty | Description | Mfr Code | Mfr Part Number |
|---|---|---|---|---|---|---|
| A5A7C21 | 0160-2055 | 9 | | CAPACITOR-FXD .01UF +80-20% 100VDC CER | 28480 | 0160-2055 |
| A5A7C22 | 0160-0576 | 5 | | CAPACITOR-FXD .1UF +-20% 50VDC CER | 28480 | 0160-0576 |
| A5A7CR1 | 1901-0378 | 6 | 6 | DIODE-GEN PRP 35V 50MA DO-35 | 28480 | 1901-0378 |
| A5A7CR2 | 1901-0050 | 3 | | DIODE-SWITCHING 80V 200MA 2NS DO-35 | 28480 | 1901-0050 |
| A5A7CR3 | 1901-0050 | 3 | | DIODE-SWITCHING 80V 200MA 2NS DO-35 | 28480 | 1901-0050 |
| A5A7CR4 | 1901-0378 | 6 | | DIODE-GEN PRP 35V 50MA DO-35 | 28480 | 1901-0378 |
| A5A7CR5 | 1901-0378 | 6 | | DIODE-GEN PRP 35V 50MA DO-35 | 28480 | 1901-0378 |
| A5A7CR6 | 1901-0378 | 6 | | DIODE-GEN PRP 35V 50MA DO-35 | 28480 | 1901-0378 |
| A5A7CR7 | 1901-0378 | 6 | | DIODE-GEN PRP 35V 50MA DO-35 | 28480 | 1901-0378 |
| A5A7CR8 | 1901-0378 | 6 | | DIODE-GEN PRP 35V 50MA DO-35 | 28480 | 1901-0378 |
| A5A7CR9 | 1901-0050 | 3 | | DIODE-SWITCHING 80V 200MA 2NS DO-35 | 28480 | 1901-0050 |
| A5A7MP1 | 1480-0073 | 6 | | PIN-ROLL .062-IN-DIA .25-IN-LG BE-CU | 28480 | 1480-0073 |
| A5A7MP2 | 4040-0748 | 3 | | EXTR-PC BD BLK POLYC .062-BD-THKNS | 28480 | 4040-0748 |
| A5A7MP3 | 4040-0755 | 2 | 1 | EXTR-PC BD VIO POLYC .062-BD-THKNS | 28480 | 4040-0755 |
| A5A7Q1 | 1853-0482 | 8 | 3 | TRANSISTOR PNP 2N3635 SI TO-39 PD=1W | 01295 | 2N3635 |
| A5A7Q2 | 1854-0637 | 1 | | TRANSISTOR NPN 2N2219A SI TO-5 PD=800MW | 01295 | 2N2219A |
| A5A7Q3 | 1853-0459 | 3 | | TRANSISTOR PNP SI PD=625MW FT=200MHZ | 28480 | 1853-0459 |
| A5A7Q4 | 1854-0810 | 2 | | TRANSISTOR NPN SI PD=625MW FT=200MHZ | 28480 | 1854-0810 |
| A5A7Q5 | 1855-0020 | 8 | 3 | TRANSISTOR J-FET N-CHAN D-MODE TO-18 SI | 28480 | 1855-0020 |
| A5A7Q6 | 1855-0020 | 8 | | TRANSISTOR J-FET N-CHAN D-MODE TO-18 SI | 28480 | 1855-0020 |
| A5A7Q7 | 1855-0020 | 8 | | TRANSISTOR J-FET N-CHAN D-MODE TO-18 SI | 28480 | 1855-0020 |
| A5A7Q8 | 1854-0810 | 2 | | TRANSISTOR NPN SI PD=625MW FT=200MHZ | 28480 | 1854-0810 |
| A5A7Q9 | 1853-0314 | 9 | | TRANSISTOR PNP 2N2905A SI TO-39 PD=600MW | 04713 | 2N2905A |
| A5A7Q10 | 1854-0712 | 3 | 1 | TRANSISTOR-DUAL NPN PD=1.8W | 28480 | 1854-0712 |
| A5A7Q11 | 1854-0810 | 2 | | TRANSISTOR NPN SI PD=625MW FT=200MHZ | 28480 | 1854-0810 |
| A5A7Q12 | 1853-0459 | 3 | | TRANSISTOR PNP SI PD=625MW FT=200MHZ | 28480 | 1853-0459 |
| A5A7R1 | 0698-0085 | 0 | | RESISTOR 2.61K 1% .125W F TC=0+-100 | 24546 | C4-1/8-T0-2611-F |
| A5A7R2 | 0757-0288 | 1 | | RESISTOR 9.09K 1% .125W F TC=0+-100 | 19701 | MF4C1/8-T0-9091-F |
| A5A7R3 | 0698-3334 | 8 | 1 | RESISTOR 178 1% .5W F TC=0+-100 | 28480 | 0698-3334 |
| A5A7R4 | 0757-0814 | 9 | 1 | RESISTOR 511 1% .5W F TC=0+-100 | 28480 | 0757-0814 |
| A5A7R5 | 0811-2870 | 7 | 2 | RESISTOR 1.96K 1% .05W PWW TC=0+-10 | 14140 | 1409-1/20-D-1961-F |
| A5A7R6 | 0757-0421 | 4 | | RESISTOR 825 1% .125W F TC=0+-100 | 24546 | C4-1/8-T0-825R-F |
| A5A7R7 | 0811-3372 | 6 | 1 | RESISTOR 1.71K 1% .05W PWW TC=0+-10 | 28480 | 0811-3372 |
| A5A7R8 | 2100-3351 | 6 | | RESISTOR-TRMR 500 10% C SIDE-ADJ 1-TRN | 28480 | 2100-3351 |
| A5A7R9 | 0811-3598 | 8 | 1 | RESISTOR-18.5K 1% .125W TC=0+-2PPM/C | 28480 | 0811-3598 |
| A5A7R10 | 0757-0280 | 3 | | RESISTOR 1K 1% .125W F TC=0+-100 | 24546 | C4-1/8-T0-1001-F |
| A5A7R11 | 0757-0280 | 3 | | RESISTOR 1K 1% .125W F TC=0+-100 | 24546 | C4-1/8-T0-1001-F |
| A5A7R12 | 0757-0464 | 5 | | RESISTOR 90.9K 1% .125W F TC=0+-100 | 24546 | C4-1/8-T0-9092-F |
| A5A7R13 | 0698-3439 | 4 | 1 | RESISTOR 178 1% .125W F TC=0+-100 | 24546 | C4-1/8-T0-178R-F |
| A5A7R14 | 2100-3152 | 5 | 1 | RESISTOR-TRMR 5K 10% MF SIDE-ADJ 25-TRN | 28480 | 2100-3152 |
| A5A7R15 | 0757-0401 | 0 | | RESISTOR 100 1% .125W F TC=0+-100 | 24546 | C4-1/8-T0-101-F |
| A5A7R16 | 0757-0317 | 7 | | RESISTOR 1.33K 1% .125W F TC=0+-100 | 24546 | C4-1/8-T0-1331-F |
| A5A7R17 | 2100-3103 | 6 | | RESISTOR-TRMR 10K 10% C SIDE-ADJ 17-TRN | 02111 | 43P103 |
| A5A7R18 | 2100-3103 | 6 | | RESISTOR-TRMR 10K 10% C SIDE-ADJ 17-TRN | 02111 | 43P103 |
| A5A7R19 | 2100-3103 | 6 | | RESISTOR-TRMR 10K 10% C SIDE-ADJ 17-TRN | 02111 | 43P103 |
| A5A7R20 | 0698-7260 | 7 | | RESISTOR 10K 1% .05W F TC=0+-100 | 24546 | C3-1/8-T0-1002-F |
| A5A7R21 | 0698-7260 | 7 | | RESISTOR 10K 1% .05W F TC=0+-100 | 24546 | C3-1/8-T0-1002-F |
| A5A7R22 | 0698-7260 | 7 | | RESISTOR 10K 1% .05W F TC=0+-100 | 24546 | C3-1/8-T0-1002-F |
| A5A7R23 | 0698-7260 | 7 | | RESISTOR 10K 1% .05W F TC=0+-100 | 24546 | C3-1/8-T0-1002-F |
| A5A7R24 | 0757-0419 | 0 | | RESISTOR 681 1% .125W F TC=0+-100 | 24546 | C4-1/8-T0-681R-F |
| A5A7R25 | 0811-3373 | 7 | 3 | RESISTOR 17.8K .1% .05W PWW TC=0+-10 | 28480 | 0811-3373 |
| A5A7R26 | 0811-3373 | 7 | | RESISTOR 17.8K .1% .05W PWW TC=0+-10 | 28480 | 0811-3373 |
| A5A7R27 | 0811-3373 | 7 | | RESISTOR 17.8K .1% .05W PWW TC=0+-10 | 28480 | 0811-3373 |
| A5A7R28 | 0757-0442 | 9 | | RESISTOR 10K 1% .125W F TC=0+-100 | 24546 | C4-1/8-T0-1002-F |
| A5A7R29 | 0757-0442 | 9 | | RESISTOR 10K 1% .125W F TC=0+-100 | 24546 | C4-1/8-T0-1002-F |
| A5A7R30 | 0757-0442 | 9 | | RESISTOR 10K 1% .125W F TC=0+-100 | 24546 | C4-1/8-T0-1002-F |
| A5A7R31 | 0811-3369 | 1 | 2 | RESISTOR 12K .1% .125W PWW TC=0+-10 | 28480 | 0811-3369 |
| A5A7R32 | 0811-3359 | 9 | 1 | RESISTOR 12.5K .1% .05W PWW TC=0+-5 | 28480 | 0811-3359 |
| A5A7R33 | 0811-3369 | 1 | | RESISTOR 12K .1% .125W PWW TC=0+-10 | 28480 | 0811-3369 |
| A5A7R34 | 0757-0417 | 8 | | RESISTOR 562 1% .125W F TC=0+-100 | 24546 | C4-1/8-T0-562R-F |
| A5A7R35 | 0811-3366 | 8 | 4 | RESISTOR 5K .1% .05W PWW TC=0+-2 | 28480 | 0811-3366 |
| A5A7R36 | 0811-3366 | 8 | | RESISTOR 5K .1% .05W PWW TC=0+-2 | 28480 | 0811-3366 |
| A5A7R37 | 0811-3366 | 8 | | RESISTOR 5K .1% .05W PWW TC=0+-2 | 28480 | 0811-3366 |
| A5A7R38 | 0811-3366 | 8 | | RESISTOR 5K .1% .05W PWW TC=0+-2 | 28480 | 0811-3366 |
| A5A7R39 | 0757-0317 | 7 | | RESISTOR 1.33K 1% .125W F TC=0+-100 | 24546 | C4-1/8-T0-1331-F |
| A5A7R40 | 0698-3162 | 0 | 1 | RESISTOR 46.4K 1% .125W F TC=0+-100 | 24546 | C4-1/8-T0-4642-F |

See introduction to this section for ordering information
*Indicates factory selected value
†Backdating information in Section VII



www.valuetronics.com

Table 6-3. Replaceable Parts

| Reference Designation | HP Part Number | C D | Qty | Description | Mfr Code | Mfr Part Number |
|---|---|---|---|---|---|---|
| A5A7R41 | 0757-0439 | 4 | | RESISTOR 6.81K 1% .125W F TC=0+-100 | 24546 | C4-1/8-T0-6811-F |
| A5A7R42 | 0811-3368 | 0 | 1 | RESISTOR 100K 1% .05W PWW TC=0+-10 | 28480 | 0811-3368 |
| A5A7R43 | 0811-0648 | 3 | 2 | RESISTOR 50K .01% .125W PWW TC=0+-10 | 28480 | 0811-0648 |
| A5A7R44 | 0811-0648 | 3 | | RESISTOR 50K .01% .125W PWW TC=0+-10 | 28480 | 0811-0648 |
| A5A7R45 | 0757-0401 | 0 | | RESISTOR 100 1% .125W F TC=0+-100 | 24546 | C4-1/8-T0-101-F |
| A5A7R46 | 0811-2870 | 7 | | RESISTOR 1.96K 1% .05W PWW TC=0+-10 | 14140 | 1409-1/20-D-1961-F |
| A5A7R47 | 0698-5446 | 7 | 1 | RESISTOR 31.6K .25% .125W F TC=0+-50 | 28480 | 0698-5446 |
| A5A7R48 | 0757-0401 | 0 | | RESISTOR 100 1% .125W F TC=0+-100 | 24546 | C4-1/8-T0-101-F |
| A5A7R49 | 0757-0289 | 2 | | RESISTOR 13.3K 1% .125W F TC=0+-100 | 19701 | MF4C1/8-T0-1332-F |
| A5A7R50 | 0757-0416 | 7 | | RESISTOR 511 1% .125W F TC=0+-100 | 24546 | C4-1/8-T0-511R-F |
| A5A7R51 | 2100-3274 | 2 | | RESISTOR-TRMR 10K 10% C SIDE-ADJ 1-TRN | 28480 | 2100-3274 |
| A5A7R52 | 0757-0401 | 0 | | RESISTOR 100 1% .125W F TC=0+-100 | 24546 | C4-1/8-T0-101-F |
| A5A7R53 | 0811-2675 | 0 | 2 | RESISTOR 1K .02% .2W PWW TC=0+-10 | 14140 | 1283-1/20-D-1001-Q |
| A5A7R54 | 2100-3274 | 2 | | RESISTOR-TRMR 10K 10% C SIDE-ADJ 1-TRN | 28480 | 2100-3274 |
| A5A7R55 | 2100-3274 | 2 | | RESISTOR-TRMR 10K 10% C SIDE-ADJ 1-TRN | 28480 | 2100-3274 |
| A5A7R56 | 0698-3151 | 7 | | RESISTOR 2.87K 1% .125W F TC=0+-100 | 24546 | C4-1/8-T0-2871-F |
| A5A7R57 | 0811-3202 | 1 | | RESISTOR 30.615K .1% .05W PWW TC=0+-10 | 14140 | 1409-1/40-30615R-B |
| A5A7R58 | 0811-3370 | 4 | 2 | RESISTOR 20K 1% .05W PWW TC=0+-10 | 28480 | 0811-3370 |
| A5A7R59 | 0698-3151 | 7 | | RESISTOR 2.87K 1% .125W F TC=0+-100 | 24546 | C4-1/8-T0-2871-F |
| A5A7R60 | 0811-3370 | 4 | | RESISTOR 20K 1% .05W PWW TC=0+-10 | 28480 | 0811-3370 |
| A5A7R61 | 0811-3135 | 9 | 3 | RESISTOR 10K .1% .125W PWW TC=0+-10 | 28480 | 0811-3135 |
| A5A7R62 | 0811-3135 | 9 | | RESISTOR 10K .1% .125W PWW TC=0+-10 | 28480 | 0811-3135 |
| A5A7R63 | 0811-3396 | 4 | 1 | RESISTOR 11K 1% .05W PWW TC=0+-2 | 28480 | 0811-3396 |
| A5A7R64 | 0811-3135 | 9 | | RESISTOR 10K .1% .125W PWW TC=0+-10 | 28480 | 0811-3135 |
| A5A7R65 | 0757-0401 | 0 | | RESISTOR 100 1% .125W F TC=0+-100 | 24546 | C4-1/8-T0-101-F |
| A5A7R66 | 2100-3103 | 6 | | RESISTOR-TRMR 10K 10% C SIDE-ADJ 17-TRN | 02111 | 43P103 |
| A5A7R67 | 2100-3103 | 6 | | RESISTOR-TRMR 10K 10% C SIDE-ADJ 17-TRN | 02111 | 43P103 |
| A5A7R68 | 2100-3103 | 6 | | RESISTOR-TRMR 10K 10% C SIDE-ADJ 17-TRN | 02111 | 43P103 |
| A5A7R69 | 2100-3103 | 6 | | RESISTOR-TRMR 10K 10% C SIDE-ADJ 17-TRN | 02111 | 43P103 |
| A5A7R70 | 0811-2675 | 0 | | RESISTOR 1K .02% .2W PWW TC=0+-10 | 14140 | 1283-1/20-D-1001-Q |
| A5A7TP1 | 1251-0600 | 0 | | CONNECTOR-SGL CONT PIN 1.14-MM-BSC-SZ SQ | 28480 | 1251-0600 |
| A5A7TP2 | 1251-0600 | 0 | | CONNECTOR-SGL CONT PIN 1.14-MM-BSC-SZ SQ | 28480 | 1251-0600 |
| A5A7TP3 | 1251-0600 | 0 | | CONNECTOR-SGL CONT PIN 1.14-MM-BSC-SZ SQ | 28480 | 1251-0600 |
| A5A7TP4 | 1251-0600 | 0 | | CONNECTOR-SGL CONT PIN 1.14-MM-BSC-SZ SQ | 28480 | 1251-0600 |
| A5A7TP5 | 1251-0600 | 0 | | CONNECTOR-SGL CONT PIN 1.14-MM-BSC-SZ SQ | 28480 | 1251-0600 |
| A5A7TP6 | 1251-0600 | 0 | | CONNECTOR-SGL CONT PIN 1.14-MM-BSC-SZ SQ | 28480 | 1251-0600 |
| A5A7U1 | 1820-0223 | 0 | 7 | IC OP AMP GP TO-99 PKG | 3L585 | CA301AT |
| A5A7U2 | 1820-0223 | 0 | | IC OP AMP GP TO-99 PKG | 3L585 | CA301AT |
| A5A7U3 | 1826-0229 | 8 | 1 | IC OP AMP LOW-DRIFT TO-99 PKG | 06665 | OP-05CJ |
| A5A7U4 | 1826-0582 | 6 | | IC SWITCH ANLG QUAD 16-DIP-C PKG | 27014 | LF13201D |
| A5A7U5 | 1826-0582 | 6 | | IC SWITCH ANLG QUAD 16-DIP-C PKG | 27014 | LF13201D |
| A5A7U6 | 1826-0582 | 6 | | IC SWITCH ANLG QUAD 16-DIP-C PKG | 27014 | LF13201D |
| A5A7U7 | 1820-0223 | 0 | | IC OP AMP GP TO-99 PKG | 3L585 | CA301AT |
| A5A7U8 | 1820-0223 | 0 | | IC OP AMP GP TO-99 PKG | 3L585 | CA301AT |
| A5A7U9 | 1820-0223 | 0 | | IC OP AMP GP TO-99 PKG | 3L585 | CA301AT |
| A5A7U10 | 1820-0223 | 0 | | IC OP AMP GP TO-99 PKG | 3L585 | CA301AT |
| A5A7U11 | 1820-0223 | 0 | | IC OP AMP GP TO-99 PKG | 3L585 | CA301AT |
| A5A7VR1 | 1902-0958 | 2 | | DIODE-ZNR 10V 5% DO-36 PD=.4W TC=+.075% | 28480 | 1902-0958 |
| A5A7VR2 | 1902-0660 | 7 | 1 | DIODE-ZNR 1N827 6.2V 5% DO-7 PD=.4W | 24046 | 1N827 |
| A5A7VR3 | 1902-0956 | 0 | 1 | DIODE-ZNR 8.2V 5% DO-35 PD=.4W TC=+.065% | 28480 | 1902-0956 |
| A5A7VR4 | 1902-0965 | 1 | 1 | DIODE-ZNR 20V 5% DO-35 PD=.4W TC=+.092% | 28480 | 1902-0965 |
| A5A8 | 86730-60003 | 8 | 1 | BD AY MOTHER | 28480 | 86730-60003 |
| A5A8CR1 | 1901-0050 | 3 | | DIODE-SWITCHING 80V 200MA 2NS DO-35 | 28480 | 1901-0050 |
| A5A8J1 | 1250-0257 | 1 | | CONNECTOR-RF SMB M PC 50-OHM | 28480 | 1250-0257 |
| A5A8J2 | 1251-3024 | 8 | 1 | CONNECTOR 26-PIN M RECTANGULAR | 28480 | 1251-3024 |
| A5A8J2 | 86730-80007 | 4 | 1 | CONN SGLE CONT | 28480 | 86730-80007 |
| A5A8J3 | 1200-0812 | 9 | 2 | SOCKET-IC 16-CONT DIP DIP-SLDR | 28480 | 1200-0812 |
| A5A8J4 | 1251-5649 | 7 | 1 | CONNECTOR 20-PIN M POST TYPE | 28480 | 1251-5649 |
| A5A8J5 | 1250-0257 | 1 | | CONNECTOR-RF SMB M PC 50-OHM | 28480 | 1250-0257 |
| A5A8J6 | 1250-0257 | 1 | | CONNECTOR-RF SMB M PC 50-OHM | 28480 | 1250-0257 |
| A5A8J7 | 1200-0508 | 0 | 2 | SOCKET-IC 14-CONT DIP-SLDR | 28480 | 1200-0508 |
| A5A8J8 | 1200-0508 | 0 | | SOCKET-IC 14-CONT DIP-SLDR | 28480 | 1200-0508 |
| A5A8J9 | 1250-0257 | 1 | | CONNECTOR-RF SMB M PC 50-OHM | 28480 | 1250-0257 |

A5

See introduction to this section for ordering information
*Indicates factory selected value
†Backdating information in Section VII



www.valuetronics.com

## Table 6-3. Replaceable Parts

| Reference Designation | HP Part Number | C D | Qty | Description | Mfr Code | Mfr Part Number |
|---|---|---|---|---|---|---|
| A5A8J10 | 1251-0600 | 0 | | CONNECTOR-SGL CONT PIN 1.14-MM-BSC-SZ SQ | 28480 | 1251-0600 |
| A5A8MP1 | 0380-0600 | 2 | 1 | STANDOFF-RVT-ON .218-IN-LG 6-32THD | 00000 | ORDER BY DESCRIPTION |
| A5A8MP2 | 0590-0526 | 6 | 18 | THREADED INSERT-NUT 4-40 .065-IN-LG SST | 28480 | 0590-0526 |
| A5A8MP3 | 1251-2313 | 6 | 14 | CONNECTOR-SGL CONT SKT .04-IN-BSC-SZ RND | 28480 | 1251-2313 |
| A5A8R1 | 0811-3591 | 1 | | RESISTOR .1 5% 1W PW TC=0+-80 | 28480 | 0811-3591 |
| A5A8TP1 | 0360-0535 | 0 | | TERMINAL TEST POINT PCB | 00000 | ORDER BY DESCRIPTION |
| A5A8TP2 | 0360-0535 | 0 | | TERMINAL TEST POINT PCB | 00000 | ORDER BY DESCRIPTION |
| A5A8VR1 | 1902-0176 | 8 | 2 | DIODE-ZNR 47V 5% PD=1W IR=5 | 28480 | 1902-0176 |
| A5A8XA1 | 1251-2582 | 1 | 1 | CONNECTOR-PC EDGE 24-CONT/ROW 2-ROWS | 28480 | 1251-2582 |
| A5A8XA2 | 1251-2026 | 8 | 3 | CONNECTOR-PC EDGE 18-CONT/ROW 2-ROWS | 28480 | 1251-2026 |
| A5A8XA3 | 1251-1365 | 6 | 2 | CONNECTOR-PC EDGE 22-CONT/ROW 2-ROWS | 28480 | 1251-1365 |
| A5A8XA4 | 1251-2026 | 8 | | CONNECTOR-PC EDGE 18-CONT/ROW 2-ROWS | 28480 | 1251-2026 |
| A5A8XA5 | 1251-1365 | 6 | | CONNECTOR-PC EDGE 22-CONT/ROW 2-ROWS | 28480 | 1251-1365 |
| A5A8XA6 | 1251-2026 | 8 | | CONNECTOR-PC EDGE 18-CONT/ROW 2-ROWS | 28480 | 1251-2026 |
| A5A9 | 86730-60005 | 0 | 1 | BD AY MICROPROC | 28480 | 86730-60005 |
| A5A9C1 | 0180-0229 | 7 | | CAPACITOR-FXD 33UF+-10% 10VDC TA | 56289 | 150D336X9010B2 |
| A5A9C2 | 0180-0374 | 3 | | CAPACITOR-FXD 10UF+-10% 20VDC TA | 56289 | 150D106X9020B2 |
| A5A9C3 | 0180-0374 | 3 | | CAPACITOR-FXD 10UF+-10% 20VDC TA | 56289 | 150D106X9020B2 |
| A5A9C4 | 0160-2224 | 4 | 1 | CAPACITOR-FXD 1800PF +-5% 300VDC MICA | 28480 | 0160-2224 |
| A5A9C5 | 0180-0374 | 3 | | CAPACITOR-FXD 10UF+-10% 20VDC TA | 56289 | 150D106X9020B2 |
| A5A9C6 | 0180-0374 | 3 | | CAPACITOR-FXD 10UF+-10% 20VDC TA | 56289 | 150D106X9020B2 |
| A5A9C7 | 0180-0374 | 3 | | CAPACITOR-FXD 10UF+-10% 20VDC TA | 56289 | 150D106X9020B2 |
| A5A9C8 | 0180-0374 | 3 | | CAPACITOR-FXD 10UF+-10% 20VDC TA | 56289 | 150D106X9020B2 |
| A5A9C9 | 0160-3879 | 7 | | CAPACITOR-FXD .01UF +-20% 100VDC CER | 28480 | 0160-3879 |
| A5A9C10 | 0160-4493 | 3 | 2 | CAPACITOR-FXD 27PF +-5% 200VDC CER 0+-30 | 28480 | 0160-4493 |
| A5A9C11 | 0160-4493 | 3 | | CAPACITOR-FXD 27PF +-5% 200VDC CER 0+-30 | 28480 | 0160-4493 |
| A5A9CR1 | 1901-0050 | 3 | | DIODE-SWITCHING 80V 200MA 2NS DO-35 | 28480 | 1901-0050 |
| A5A9CR2 | 1901-0050 | 3 | | DIODE-SWITCHING 80V 200MA 2NS DO-35 | 28480 | 1901-0050 |
| A5A9DS1 | 1990-0933 | 8 | 2 | LED-LAMP RED | 28480 | 1990-0933 |
| A5A9DS2 | 1990-0933 | 8 | | LED-LAMP RED | 28480 | 1990-0933 |
| A5A9J1 | 1251-5671 | 5 | 1 | CONNECTOR 20-PIN M POST TYPE | 28480 | 1251-5671 |
| A5A9J2 | 1251-5721 | 6 | 1 | CONNECTOR 40-PIN M POST TYPE | 28480 | 1251-5721 |
| A5A9J3 | 1251-8281 | 9 | | CONN-POST TYPE .100-PIN-SPCG 5-CONT | 28480 | 1251-8281 |
| A5A9L1 | 9140-0096 | 1 | 1 | INDUCTOR RF-CH-MLD 1UH 10% .166DX.385LG | 28480 | 9140-0096 |
| A5A9MP1 | 0361-0155 | 2 | 4 | RIVET-BLIND PL-STEM DOME-HD .125DIA | 28480 | 0361-0155 |
| A5A9MP2 | 1390-0104 | 3 | 7 | FASTENER-SNAP-IN GROM PANEL THKNS | 28480 | 1390-0104 |
| A5A9MP3 | 1390-0281 | 7 | 7 | FASTENER-SNAP-IN PLGR PANEL THKNS | 28480 | 1390-0281 |
| A5A9MP4 | 86730-00024 | 7 | 1 | SUPPORT RIB | 28480 | 86730-00024 |
| A5A9Q1 | 1854-0009 | 1 | 1 | TRANSISTOR NPN SI PD=300MW FT=600MHZ | 04713 | 2N709 |
| A5A9R1 | 1810-0280 | 8 | 9 | NETWORK-RES 10-SIP10.0K OHM X 9 | 01121 | 210A103 |
| A5A9R2 | 0757-0442 | 9 | | RESISTOR 10K 1% .125W F TC=0+-100 | 24546 | C4-1/8-T0-1002-F |
| A5A9R3 | 0757-0442 | 9 | | RESISTOR 10K 1% .125W F TC=0+-100 | 24546 | C4-1/8-T0-1002-F |
| A5A9R4 | 0757-0442 | 9 | | RESISTOR 10K 1% .125W F TC=0+-100 | 24546 | C4-1/8-T0-1002-F |
| A5A9R5 | 0757-0442 | 9 | | RESISTOR 10K 1% .125W F TC=0+-100 | 24546 | C4-1/8-T0-1002-F |
| A5A9R6 | 1810-0280 | 8 | | NETWORK-RES 10-SIP10.0K OHM X 9 | 01121 | 210A103 |
| A5A9R7 | 0698-3155 | 1 | | RESISTOR 4.64K 1% .125W F TC=0+-100 | 24546 | C4-1/8-T0-4641-F |
| A5A9R8 | 1810-0280 | 8 | | NETWORK-RES 10-SIP10.0K OHM X 9 | 01121 | 210A103 |
| A5A9R9 | 0698-3160 | 8 | | RESISTOR 31.6K 1% .125W F TC=0+-100 | 24546 | C4-1/8-T0-3162-F |
| A5A9R10 | 0698-3158 | 2 | | RESISTOR 14.7K 1% .125W F TC=0+-100 | 24546 | C4-1/8-T0-1472-F |
| A5A9R11 | 0757-0280 | 3 | | RESISTOR 1K 1% .125W F TC=0+-100 | 24546 | C4-1/8-T0-1001-F |
| A5A9R12 | 0757-0280 | 3 | | RESISTOR 1K 1% .125W F TC=0+-100 | 24546 | C4-1/8-T0-1001-F |
| A5A9R13 | 0757-0280 | 3 | | RESISTOR 1K 1% .125W F TC=0+-100 | 24546 | C4-1/8-T0-1001-F |
| A5A9R14 | 0757-0280 | 3 | | RESISTOR 1K 1% .125W F TC=0+-100 | 24546 | C4-1/8-T0-1001-F |
| A5A9R15 | 1810-0280 | 8 | | NETWORK-RES 10 SIP10.0K OHM X 9 | 01121 | 210A103 |
| A5A9R16 | 1810-0280 | 8 | | NETWORK-RES 10-SIP10.0K OHM X 9 | 01121 | 210A103 |
| A5A9R17 | 1810-0273 | 9 | 1 | NETWORK-RES 10-SIP470.0 OHM X 9 | 01121 | 210A471 |

A5

See introduction to this section for ordering information
*Indicates factory selected value
†Backdating information in Section VII



www.valuetronics.com

Table 6-3. Replaceable Parts

| Reference Designation | HP Part Number | C D | Qty | Description | Mfr Code | Mfr Part Number |
|---|---|---|---|---|---|---|
| A5A9SW1 | 3101-2172 | 0 | 1 | SWITCH-TGL DIP-RKR-ASSY SPDT .05A 30VDC | 28480 | 3101-2172 |
| A5A9TP1 | 0360-0535 | 0 | | TERMINAL TEST POINT PCB | 00000 | ORDER BY DESCRIPTION |
| A5A9TP2 | 0360-0535 | 0 | | TERMINAL TEST POINT PCB | 00000 | ORDER BY DESCRIPTION |
| A5A9TP3 | 0360-0535 | 0 | | TERMINAL TEST POINT PCB | 00000 | ORDER BY DESCRIPTION |
| A5A9TP4 | 0360-0535 | 0 | | TERMINAL TEST POINT PCB | 00000 | ORDER BY DESCRIPTION |
| A5A9TP5 | 0360-0535 | 0 | | TERMINAL TEST POINT PCB | 00000 | ORDER BY DESCRIPTION |
| A5A9TP6 | 0360-0535 | 0 | | TERMINAL TEST POINT PCB | 00000 | ORDER BY DESCRIPTION |
| A5A9TP7 | 0360-0535 | 0 | | TERMINAL TEST POINT PCB | 00000 | ORDER BY DESCRIPTION |
| A5A9TP8 | 0360-0535 | 0 | | TERMINAL TEST POINT PCB | 00000 | ORDER BY DESCRIPTION |
| A5A9TP9 | 0360-0535 | 0 | | TERMINAL TEST POINT PCB | 00000 | ORDER BY DESCRIPTION |
| A5A9U1 | 1820-1201 | 6 | 1 | IC GATE TTL LS AND QUAD 2-INP | 01295 | SN74LS08N |
| A5A9U2 | 1826-0180 | 0 | 1 | IC TIMER TTL MONO/ASTBL | 01295 | NE555P |
| A5A9U3 | 1820-2024 | 3 | 6 | IC DRVR TTL LS LINE DRVR OCTL | 01295 | SN74LS244N |
| A5A9U4 | 1820-1197 | 9 | 1 | IC GATE TTL LS NAND QUAD 2-INP | 01295 | SN74LS00N |
| A5A9U5 | 1820-2075 | 4 | 1 | IC TRANSCEIVER TTL LS BUS OCTL | 28480 | 1820-2075 |
| A5A9U6 | 1820-2024 | 3 | | IC DRVR TTL LS LINE DRVR OCTL | 01295 | SN74LS244N |
| A5A9U7 | 86730-80005 | 2 | 1 | PAL #1 | 28480 | 86730-80005 |
| A5A9U8 | 1820-2099 | 2 | 1 | IC MICPROC NMOS 8-BIT | 04713 | MC6802P |
| A5A9U9 | 1820-2024 | 3 | | IC DRVR TTL LS LINE DRVR OCTL | 01295 | SN74LS244N |
| A5A9U10 | 1820-1208 | 3 | | IC GATE TTL LS OR QUAD 2-INP | 01295 | SN74LS32N |
| A5A9U11 | 1820-1199 | 1 | 1 | IC INV TTL LS HEX 1-INP | 01295 | SN74LS04N |
| A5A9U12 | 1818-1768 | 5 | 1 | IC CMOS 16384 (18K) STAT RAM 150-NS 3-S | 50545 | UPD446C-1(PER HP DWG) |
| A5A9U13 | 86730-80001 | 8 | 1 | 'E' PROM #1 | 28480 | 86730-80001 |
| A5A9U14 | 86730-80002 | 9 | 1 | 'E' PROM #2 | 28480 | 86730-80002 |
| A5A9U15 | 86730-80003 | 0 | 1 | 'E' PROM #3 | 28480 | 86730-80003 |
| A5A9U16 | 86730-80004 | 1 | 1 | 'E' PROM #4 | 28480 | 86730-80004 |
| A5A9U17 | 1820-1947 | 7 | 1 | IC MISC CMOS | 04713 | MC14490FP |
| A5A9U18 | 1820-2024 | 3 | | IC DRVR TTL LS LINE DRVR OCTL | 01295 | SN74LS244N |
| A5A9U19 | 1820-2024 | 3 | | IC DRVR TTL LS LINE DRVR OCTL | 01295 | SN74LS244N |
| A5A9U20 | 1820-2081 | 2 | 2 | IC NMOS | 04713 | MC68A21P |
| A5A9U21 | 1820-2081 | 2 | | IC NMOS | 04713 | MC68A21P |
| A5A9U22 | 1820-2024 | 3 | | IC DRVR TTL LS LINE DRVR OCTL | 01295 | SN74LS244N |
| A5A9XU8 | 1200-0654 | 7 | 1 | SOCKET-IC 40-CONT DIP DIP-SLDR | 28480 | 1200-0654 |
| A5A9XU13 | 1200-0541 | 1 | 1 | SOCKET-IC 24-CONT DIP DIP-SLDR | 28480 | 1200-0541 |
| A5A9XU14 | 1200-0567 | 1 | 3 | SOCKET-IC 28-CONT DIP DIP-SLDR | 28480 | 1200-0567 |
| A5A9XU15 | 1200-0567 | 1 | | SOCKET-IC 28-CONT DIP DIP-SLDR | 28480 | 1200-0567 |
| A5A9XU16 | 1200-0567 | 1 | | SOCKET-IC 28-CONT DIP DIP-SLDR | 28480 | 1200-0567 |
| A5A9Y1 | 0410-0465 | 2 | 1 | CRYSTAL-QUARTZ 4.00000 MHZ HC-6/U-HLDR | 28480 | 0410-0465 |
| A5A10 | 86730-60006 | 1 | 1 | BD AY POWER SUP | 28480 | 86730-60006 |
| A5A10C1 | 0160-0168 | 1 | 3 | CAPACITOR-FXD .1UF +-10% 200VDC POLYE | 28480 | 0160-0168 |
| A5A10C2 | 0160-0168 | 1 | | CAPACITOR-FXD .1UF +-10% 200VDC POLYE | 28480 | 0160-0168 |
| A5A10C3 | 0180-3306 | 7 | 1 | CAP-4000UF 50V | 28480 | 0180-3306 |
| A5A10C4 | 0180-3303 | 4 | 1 | CAP-8700UF | 28480 | 0180-3303 |
| A5A10C5 | 0180-3307 | 8 | 1 | CAP-4000UF 30V | 28480 | 0180-3307 |
| A5A10C6 | 0160-4835 | 7 | | CAPACITOR-FXD .1UF +-10% 50VDC CER | 28480 | 0160-4835 |
| A5A10C7 | 0160-4835 | 7 | | CAPACITOR-FXD .1UF +-10% 50VDC CER | 28480 | 0160-4835 |
| A5A10C8 | 0160-4835 | 7 | | CAPACITOR-FXD .1UF +-10% 50VDC CER | 28480 | 0160-4835 |
| A5A10C9 | 0180-2620 | 6 | | CAPACITOR-FXD 2.2UF+-10% 50VDC TA | 25088 | D2R2GS1B50K |
| A5A10C10 | 0180-0491 | 5 | | CAPACITOR-FXD 10UF+-20% 25VDC TA | 28480 | 0180-0491 |
| A5A10C11 | 0180-2661 | 5 | | CAPACITOR-FXD 1UF+-10% 50VDC TA | 25088 | D1R0GS1A50K |
| A5A10C12 | 0180-2661 | 5 | | CAPACITOR-FXD 1UF+-10% 50VDC TA | 25088 | D1R0GS1A50K |
| A5A10C13 | 0160-4835 | 7 | | CAPACITOR-FXD .1UF +-10% 50VDC CER | 28480 | 0160-4835 |
| A5A10C14 | 0160-0168 | 1 | | CAPACITOR-FXD .1UF +-10% 200VDC POLYE | 28480 | 0160-0168 |
| A5A10C15 | 0160-0127 | 2 | | CAPACITOR-FXD 1UF +-20% 25VDC CER | 28480 | 0160-0127 |
| A5A10C16 | 0180-0197 | 8 | | CAPACITOR-FXD 2.2UF+-10% 20VDC TA | 56289 | 150D225X9020A2 |
| A5A10C17 | 0180-3302 | 3 | 1 | CAP-17000UF | 28480 | 0180-3302 |
| A5A10C18 | 0180-3305 | 6 | 1 | CAP-5000UF | 28480 | 0180-3305 |
| A5A10C19 | 0180-3304 | 5 | 1 | CAP-4800UF | 28480 | 0180-3304 |
| A5A10C20 | 0180-0197 | 8 | | CAPACITOR-FXD 2.2UF+-10% 20VDC TA | 56289 | 150D225X9020A2 |
| A5A10C21 | 0180-0197 | 8 | | CAPACITOR-FXD 2.2UF+-10% 20VDC TA | 56289 | 150D225X9020A2 |
| A5A10C22 | 0160-4835 | 7 | | CAPACITOR-FXD .1UF +-10% 50VDC CER | 28480 | 0160-4835 |
| A5A10C23 | 0160-4835 | 7 | | CAPACITOR-FXD .1UF +-10% 50VDC CER | 28480 | 0160-4835 |
| A5A10C24 | 0160-0574 | 3 | | CAPACITOR-FXD .022UF +-20% 100VDC CER | 28480 | 0160-0574 |
| A5A10C25 | 0180-0491 | 5 | | CAPACITOR-FXD 10UF+-20% 25VDC TA | 28480 | 0180-0491 |

See introduction to this section for ordering information
*Indicates factory selected value
†Backdating information in Section VII



www.valuetronics.com

Table 6-3. Replaceable Parts

| Reference Designation | HP Part Number | C D | Qty | Description | Mfr Code | Mfr Part Number |
|---|---|---|---|---|---|---|
| A5A10C26 | 0180-0491 | 5 | | CAPACITOR-FXD 10UF+-20% 25VDC TA | 28480 | 0180-0491 |
| A5A10C27 | 0180-2620 | 6 | | CAPACITOR-FXD 2.2UF+-10% 50VDC TA | 25088 | D2R2GS1B50K |
| A5A10C28 | 0180-2661 | 5 | | CAPACITOR-FXD 1UF+-10% 50VDC TA | 25088 | D1R0GS1A50K |
| A5A10C29 | 0180-2661 | 5 | | CAPACITOR-FXD 1UF+-10% 50VDC TA | 25088 | D1R0GS1A50K |
| A5A10C30 | 0180-2661 | 5 | | CAPACITOR-FXD 1UF+-10% 50VDC TA | 25088 | D1R0GS1A50K |
| A5A10CR1 | 1901-0418 | 7 | 21 | DIODE-PWR RECT 400V 1.5A | 28480 | 1901-0418 |
| A5A10CR2 | 1901-0418 | 7 | | DIODE-PWR RECT 400V 1.5A | 28480 | 1901-0418 |
| A5A10CR3 | 1901-0418 | 7 | | DIODE-PWR RECT 400V 1.5A | 28480 | 1901-0418 |
| A5A10CR4 | 1901-0418 | 7 | | DIODE-PWR RECT 400V 1.5A | 28480 | 1901-0418 |
| A5A10CR5 | 1901-0418 | 7 | | DIODE-PWR RECT 400V 1.5A | 28480 | 1901-0418 |
| A5A10CR6 | 1901-0418 | 7 | | DIODE-PWR RECT 400V 1.5A | 28480 | 1901-0418 |
| A5A10CR7 | 1901-0418 | 7 | | DIODE-PWR RECT 400V 1.5A | 28480 | 1901-0418 |
| A5A10CR8 | 1901-0418 | 7 | | DIODE-PWR RECT 400V 1.5A | 28480 | 1901-0418 |
| A5A10CR9 | 1901-0418 | 7 | | DIODE-PWR RECT 400V 1.5A | 28480 | 1901-0418 |
| A5A10CR10 | 1901-0418 | 7 | | DIODE-PWR RECT 400V 1.5A | 28480 | 1901-0418 |
| A5A10CR11 | 1901-0418 | 7 | | DIODE-PWR RECT 400V 1.5A | 28480 | 1901-0418 |
| A5A10CR12 | 1901-0418 | 7 | | DIODE-PWR RECT 400V 1.5A | 28480 | 1901-0418 |
| A5A10CR13 | 1901-0704 | 4 | 11 | DIODE-PWR RECT 1N4002 100V 1A DO-41 | 01295 | 1N4002 |
| A5A10CR14 | 1901-0704 | 4 | | DIODE-PWR RECT 1N4002 100V 1A DO-41 | 01295 | 1N4002 |
| A5A10CR15 | 1901-0704 | 4 | | DIODE-PWR RECT 1N4002 100V 1A DO-41 | 01295 | 1N4002 |
| A5A10CR16 | 1901-0704 | 4 | | DIODE-PWR RECT 1N4002 100V 1A DO-41 | 01295 | 1N4002 |
| A5A10CR17 | 1901-0704 | 4 | | DIODE-PWR RECT 1N4002 100V 1A DO-41 | 01295 | 1N4002 |
| A5A10CR18 | 1901-0328 | 8 | 6 | DIODE-PWR RECT 400V 1A 6US | 03508 | A14D |
| A5A10CR19 | 1901-0328 | 8 | | DIODE-PWR RECT 400V 1A 6US | 03508 | A14D |
| A5A10CR20 | 1901-0328 | 8 | | DIODE-PWR RECT 400V 1A 6US | 03508 | A14D |
| A5A10CR21 | 1906-0231 | 2 | 1 | DIODE-CT-RECT 200V 15A | 28480 | 1906-0231 |
| A5A10CR22 | 1901-0418 | 7 | | DIODE-PWR RECT 400V 1.5A | 28480 | 1901-0418 |
| A5A10CR23 | 1901-0418 | 7 | | DIODE-PWR RECT 400V 1.5A | 28480 | 1901-0418 |
| A5A10CR24 | 1901-0418 | 7 | | DIODE-PWR RECT 400V 1.5A | 28480 | 1901-0418 |
| A5A10CR25 | 1901-0418 | 7 | | DIODE-PWR RECT 400V 1.5A | 28480 | 1901-0418 |
| A5A10CR26 | 1901-0418 | 7 | | DIODE-PWR RECT 400V 1.5A | 28480 | 1901-0418 |
| A5A10CR27 | 1901-0418 | 7 | | DIODE-PWR RECT 400V 1.5A | 28480 | 1901-0418 |
| A5A10CR28 | 1901-0418 | 7 | | DIODE-PWR RECT 400V 1.5A | 28480 | 1901-0418 |
| A5A10CR29 | 1901-0418 | 7 | | DIODE-PWR RECT 400V 1.5A | 28480 | 1901-0418 |
| A5A10CR30 | 1901-0418 | 7 | | DIODE-PWR RECT 400V 1.5A | 28480 | 1901-0418 |
| A5A10CR31 | 1901-0704 | 4 | | DIODE-PWR RECT 1N4002 100V 1A DO-41 | 01295 | 1N4002 |
| A5A10CR32 | 1901-0704 | 4 | | DIODE-PWR RECT 1N4002 100V 1A DO-41 | 01295 | 1N4002 |
| A5A10CR33 | 1901-0704 | 4 | | DIODE-PWR RECT 1N4002 100V 1A DO-41 | 01295 | 1N4002 |
| A5A10CR34 | 1901-0704 | 4 | | DIODE-PWR RECT 1N4002 100V 1A DO-41 | 01295 | 1N4002 |
| A5A10CR35 | 1901-0704 | 4 | | DIODE-PWR RECT 1N4002 100V 1A DO-41 | 01295 | 1N4002 |
| A5A10CR36 | 1901-0704 | 4 | | DIODE-PWR RECT 1N4002 100V 1A DO-41 | 01295 | 1N4002 |
| A5A10CR37 | 1901-0328 | 8 | | DIODE-PWR RECT 400V 1A 6US | 03508 | A14D |
| A5A10CR38 | 1901-0328 | 8 | | DIODE-PWR RECT 400V 1A 6US | 03508 | A14D |
| A5A10CR39 | 1901-0328 | 8 | | DIODE-PWR RECT 400V 1A 6US | 03508 | A14D |
| A5A10CR40 | 1901-0050 | 3 | | DIODE-SWITCHING 80V 200MA 2NS DO-35 | 28480 | 1901-0050 |
| A5A10DS1 | 1990-0911 | 2 | 1 | LED-LAMP ARRAY IF=60MA-MAX BVR=5V | 28480 | 1990-0911 |
| A5A10DS2 | 1990-0910 | 1 | 1 | LED-LAMP ARRAY IF=30MA-MAX BVR=5V | 28480 | 1990-0910 |
| A5A10F1 | 2110-0083 | 6 | 2 | FUSE 2.5A 250V NTD 1.25X.25 UL | 28480 | 2110-0083 |
| A5A10F2 | 2110-0002 | 9 | 2 | FUSE 2A 250V NTD 1.25X.25 UL | 75915 | 312002 |
| A5A10F3 | 2110-0002 | 9 | | FUSE 2A 250V NTD 1.25X.25 UL | 75915 | 312002 |
| A5A10F4 | 2110-0003 | 0 | 2 | FUSE 3A 250V NTD 1.25X.25 UL | 75915 | 312003 |
| A5A10F5 | 2110-0001 | 8 | 3 | FUSE 1A 250V NTD 1.25X.25 UL | 75915 | 312001 |
| A5A10F6 | 2110-0056 | 3 | 2 | FUSE 6A 250V NTD 1.25X.25 UL IEC | 75915 | 312006 |
| A5A10F7 | 2110-0003 | 0 | | FUSE 3A 250V NTD 1.25X.25 UL | 75915 | 312003 |
| A5A10F8 | 2110-0056 | 3 | | FUSE 6A 250V NTD 1.25X.25 UL IEC | 75915 | 312006 |
| A5A10F9 | 2110-0001 | 8 | | FUSE 1A 250V NTD 1.25X.25 UL | 75915 | 312001 |
| A5A10F10 | 2110-0001 | 8 | | FUSE 1A 250V NTD 1.25X.25 UL | 75915 | 312001 |
| A5A10J1 | 1251-8393 | 4 | 2 | CONN-POST TYPE .100-PIN-SPCG 7-CONT | 28480 | 1251-8393 |
| A5A10J2 | 1251-4348 | 1 | 1 | CONNECTOR 6-PIN M POST TYPE | 28480 | 1251-4348 |
| A5A10J3 | 1251-4350 | 5 | 1 | CONNECTOR 7-PIN M POST TYPE | 28480 | 1251-4350 |
| A5A10J4 | 1251-0600 | 0 | | CONNECTOR-SGL CONT PIN 1.14-MM-BSC-SZ SQ | 28480 | 1251-0600 |
| A5A10J5 | 1251-0600 | 0 | | CONNECTOR-SGL CONT PIN 1.14-MM-BSC-SZ SQ | 28480 | 1251-0600 |
| A5A10J6 | 1251-7730 | 1 | 1 | CONNECTOR- 11 PIN | 28480 | 1251-7730 |
| A5A10J7 | 1200-0812 | 9 | | SOCKET-IC 16-CONT DIP DIP-SLDR | 28480 | 1200-0812 |
| A5A10J8 | 1251-8404 | 8 | 2 | CONN-POST TYPE .100-PIN-SPCG 16-CONT | 28480 | 1251-8404 |
| A5A10J9 | 1251-8281 | 9 | | CONN-POST TYPE .100-PIN-SPCG 5-CONT | 28480 | 1251-8281 |

A5

See introduction to this section for ordering information
*Indicates factory selected value
†Backdating information in Section VII



www.valuetronics.com

Table 6-3. Replaceable Parts

| Reference Designation | HP Part Number | C D | Qty | Description | Mfr Code | Mfr Part Number |
|---|---|---|---|---|---|---|
| A5A10K1 | 0490-1190 | 0 | 1 | RELAY 2C 5VDC-COIL .5A 125VAC | 28480 | 0490-1190 |
| A5A10MP1 | 0590-0526 | 6 | | THREADED INSERT-NUT 4-40 .065-IN-LG SST | 28480 | 0590-0526 |
| A5A10MP2 | 2110-0269 | 0 | 20 | FUSEHOLDER-CLIP TYPE.25D-FUSE | 28480 | 2110-0269 |
| A5A10MP3 | 2200-0105 | 4 | 12 | SCREW-MACH 4-40 .312-IN-LG PAN-HD-POZI | 00000 | ORDER BY DESCRIPTION |
| A5A10Q1 | 1884-0244 | 9 | 8 | THYRISTOR-SCR VRRM=400 | 3L585 | S2600D |
| A5A10Q2 | 1884-0244 | 9 | | THYRISTOR-SCR VRRM=400 | 3L585 | S2600D |
| A5A10Q3 | 1884-0244 | 9 | | THYRISTOR-SCR VRRM=400 | 3L585 | S2600D |
| A5A10Q4 | 1884-0244 | 9 | | THYRISTOR-SCR VRRM=400 | 3L585 | S2600D |
| A5A10Q5 | 1884-0244 | 9 | | THYRISTOR-SCR VRRM=400 | 3L585 | S2600D |
| A5A10Q6 | 1854-0810 | 2 | | TRANSISTOR NPN SI PD=625MW FT=200MHZ | 28480 | 1854-0810 |
| A5A10Q7 | 1854-0810 | 2 | | TRANSISTOR NPN SI PD=625MW FT=200MHZ | 28480 | 1854-0810 |
| A5A10Q8 | 1884-0244 | 9 | | THYRISTOR-SCR VRRM=400 | 3L585 | S2600D |
| A5A10Q9 | 1884-0244 | 9 | | THYRISTOR-SCR VRRM=400 | 3L585 | S2600D |
| A5A10Q10 | 1853-0462 | 8 | | TRANSISTOR PNP 2N3635 SI TO-39 PD=1W | 01295 | 2N3635 |
| A5A10Q11 | 1853-0462 | 8 | | TRANSISTOR PNP 2N3635 SI TO-39 PD=1W | 01295 | 2N3635 |
| A5A10Q12 | 1884-0244 | 9 | | THYRISTOR-SCR VRRM=400 | 3L585 | S2600D |
| A5A10R1 | 0757-0288 | 1 | | RESISTOR 9.09K 1% .125W F TC=0+-100 | 19701 | MF4C1/8-T0-9091-F |
| A5A10R2 | 0757-0438 | 3 | | RESISTOR 5.11K 1% .125W F TC=0+-100 | 24546 | C4-1/8-T0-5111-F |
| A5A10R3 | 0757-0279 | 0 | | RESISTOR 3.16K 1% .125W F TC=0+-100 | 24546 | C4-1/8-T0-3161-F |
| A5A10R4 | 0757-0401 | 0 | | RESISTOR 100 1% .125W F TC=0+-100 | 24546 | C4-1/8-T0-101-F |
| A5A10R5 | 0757-0403 | 2 | 5 | RESISTOR 121 1% .125W F TC=0+-100 | 24546 | C4-1/8-T0-121R-F |
| A5A10R6 | 2100-3083 | 1 | 3 | RESISTOR-TRMR 500 10% C TOP-ADJ 17-TRN | 32997 | 3292W-1-501 |
| A5A10R7 | 0698-4634 | 3 | 1 | RESISTOR 2.32K 1% .25W F TC=0+-100 | 24546 | C5-1/4-T0-2321-F |
| A5A10R8 | 0757-0403 | 2 | | RESISTOR 121 1% .125W F TC=0+-100 | 24546 | C4-1/8-T0-121R-F |
| A5A10R9 | 2100-3083 | 1 | | RESISTOR-TRMR 500 10% C TOP-ADJ 17-TRN | 32997 | 3292W-1-501 |
| A5A10R10 | 0757-1094 | 9 | | RESISTOR 1.47K 1% .125W F TC=0+-100 | 24546 | C4-1/8-T0-1471-F |
| A5A10R11 | 0757-0401 | 0 | | RESISTOR 100 1% .125W F TC=0+-100 | 24546 | C4-1/8-T0-101-F |
| A5A10R12 | 0757-0280 | 3 | | RESISTOR 1K 1% .125W F TC=0+-100 | 24546 | C4-1/8-T0-1001-F |
| A5A10R13 | 0757-0401 | 0 | | RESISTOR 100 1% .125W F TC=0+-100 | 24546 | C4-1/8-T0-101-F |
| A5A10R14 | 0757-0280 | 3 | | RESISTOR 1K 1% .125W F TC=0+-100 | 24546 | C4-1/8-T0-1001-F |
| A5A10R15 | 0757-0401 | 0 | | RESISTOR 100 1% .125W F TC=0+-100 | 24546 | C4-1/8-T0-101-F |
| A5A10R16 | 0757-0280 | 3 | | RESISTOR 1K 1% .125W F TC=0+-100 | 24546 | C4-1/8-T0-1001-F |
| A5A10R17 | 0698-0024 | 7 | 1 | RESISTOR 2.61K 1% .5W F TC=0+-100 | 28480 | 0698-0024 |
| A5A10R18 | 0698-3407 | 6 | 2 | RESISTOR 1.96K 1% .5W F TC=0+-100 | 28480 | 0698-3407 |
| A5A10R19 | 0757-0317 | 7 | | RESISTOR 1.33K 1% .125W F TC=0+-100 | 24546 | C4-1/8-T0-1331-F |
| A5A10R20 | 0757-0280 | 3 | | RESISTOR 1K 1% .125W F TC=0+-100 | 24546 | C4-1/8-T0-1001-F |
| A5A10R21 | 0757-0280 | 3 | | RESISTOR 1K 1% .125W F TC=0+-100 | 24546 | C4-1/8-T0-1001-F |
| A5A10R22 | 0757-0280 | 3 | | RESISTOR 1K 1% .125W F TC=0+-100 | 24546 | C4-1/8-T0-1001-F |
| A5A10R23 | 0757-0401 | 0 | | RESISTOR 100 1% .125W F TC=0+-100 | 24546 | C4-1/8-T0-101-F |
| A5A10R24 | 0698-3447 | 4 | | RESISTOR 422 1% .125W F TC=0+-100 | 24546 | C4-1/8-T0-422R-F |
| A5A10R25 | 0757-0401 | 0 | | RESISTOR 100 1% .125W F TC=0+-100 | 24546 | C4-1/8-T0-101-F |
| A5A10R26 | 0757-0418 | 9 | 2 | RESISTOR 619 1% .125W F TC=0+-100 | 24546 | C4-1/8-T0-619R-F |
| A5A10R27 | 0757-0428 | 1 | | RESISTOR 1.62K 1% .125W F TC=0+-100 | 24546 | C4-1/8-T0-1621-F |
| A5A10R28 | 0698-3136 | 8 | | RESISTOR 17.8K 1% .125W F TC=0+-100 | 24546 | C4-1/8-T0-1782-F |
| A5A10R29 | 0757-0290 | 5 | | RESISTOR 6.19K 1% .125W F TC=0+-100 | 19701 | MF4C1/8-T0-6191-F |
| A5A10R30 | 0757-0158 | 4 | 1 | RESISTOR 619 1% .5W F TC=0+-100 | 28480 | 0757-0158 |
| A5A10R31 | 0757-0442 | 9 | | RESISTOR 10K 1% .125W F TC=0+-100 | 24546 | C4-1/8-T0-1002-F |
| A5A10R32 | 0764-0016 | 8 | 1 | RESISTOR 1K 5% 2W MO TC=0+-200 | 28480 | 0764-0016 |
| A5A10R33 | 0757-0418 | 9 | | RESISTOR 619 1% .125W F TC=0+-100 | 24546 | C4-1/8-T0-619R-F |
| A5A10R34 | 0698-3444 | 1 | | RESISTOR 316 1% .125W F TC=0+-100 | 24546 | C4-1/8-T0-316R-F |
| A5A10R35 | 0757-0279 | 0 | | RESISTOR 3.16K 1% .125W F TC=0+-100 | 24546 | C4-1/8-T0-3161-F |
| A5A10R36 | 0698-3445 | 2 | | RESISTOR 348 1% .125W F TC=0+-100 | 24546 | C4-1/8-T0-348R-F |
| A5A10R37 | 0757-0403 | 2 | | RESISTOR 121 1% .125W F TC=0+-100 | 24546 | C4-1/8-T0-121R-F |
| A5A10R38 | 0698-3445 | 2 | | RESISTOR 348 1% .125W F TC=0+-100 | 24546 | C4-1/8-T0-348R-F |
| A5A10R39 | 2100-4069 | 5 | 1 | RES-VAR 100 OHM | 28480 | 2100-4069 |
| A5A10R40 | 0757-0403 | 2 | | RESISTOR 121 1% .125W F TC=0+-100 | 24546 | C4-1/8-T0-121R-F |
| A5A10R41 | 2100-3502 | 9 | 1 | RESISTOR-TRMR 200 10% C TOP-ADJ 17-TRN | 32997 | 3292W-1-201 |
| A5A10R42 | 0757-0420 | 3 | | RESISTOR 750 1% .125W F TC=0+-100 | 24546 | C4-1/8-T0-751-F |
| A5A10R43 | 0757-0403 | 2 | | RESISTOR 121 1% .125W F TC=0+-100 | 24546 | C4-1/8-T0-121R-F |
| A5A10R44 | 2100-3083 | 1 | | RESISTOR-TRMR 500 10% C TOP-ADJ 17-TRN | 32997 | 3292W-1-501 |
| A5A10R45 | 0698-6017 | 0 | 1 | RESISTOR 3.55K 1% .5W F TC=0+-50 | 28480 | 0698-6017 |
| A5A10R46 | 0757-0401 | 0 | | RESISTOR 100 1% .125W F TC=0+-100 | 24546 | C4-1/8-T0-101-F |
| A5A10R47 | 0757-0280 | 3 | | RESISTOR 1K 1% .125W F TC=0+-100 | 24546 | C4-1/8-T0-1001-F |
| A5A10R48 | 0757-0290 | 5 | | RESISTOR 6.19K 1% .125W F TC=0+-100 | 19701 | MF4C1/8-T0-6191-F |
| A5A10R49 | 0757-0279 | 0 | | RESISTOR 3.16K 1% .125W F TC=0+-100 | 24546 | C4-1/8-T0-3161-F |
| A5A10R50 | 0757-0289 | 2 | | RESISTOR 13.3K 1% .125W F TC=0+-100 | 19701 | MF4C1/8-T0-1332-F |

See introduction to this section for ordering information
*Indicates factory selected value
†Backdating information in Section VII



www.valuetronics.com

Table 6-3. Replaceable Parts

| Reference Designation | HP Part Number | C D | Qty | Description | Mfr Code | Mfr Part Number |
|---|---|---|---|---|---|---|
| A5A10R51 | 0698-3445 | 2 | | RESISTOR 348 1% .125W F TC=0+-100 | 24546 | C4-1/8-T0-348R-F |
| A5A10R52 | 0757-0422 | 5 | 1 | RESISTOR 909 1% .125W F TC=0+-100 | 24546 | C4-1/8-T0-909R-F |
| A5A10R53 | 0698-3412 | 3 | 1 | RESISTOR 3.83K 1% .5W F TC=0+-100 | 28480 | 0698-3412 |
| A5A10R54 | 0757-0280 | 3 | | RESISTOR 1K 1% .125W F TC=0+-100 | 24546 | C4-1/8-T0-1001-F |
| A5A10R55 | 0757-0280 | 3 | | RESISTOR 1K 1% .125W F TC=0+-100 | 24546 | C4-1/8-T0-1001-F |
| A5A10R56 | 0757-0280 | 3 | | RESISTOR 1K 1% .125W F TC=0+-100 | 24546 | C4-1/8-T0-1001-F |
| A5A10R57 | 0698-3407 | 6 | | RESISTOR 1.96K 1% .5W F TC=0+-100 | 28480 | 0698-3407 |
| A5A10TP1 | 0360-0535 | 0 | | TERMINAL TEST POINT PCB | 00000 | ORDER BY DESCRIPTION |
| A5A10TP2 | 0360-0535 | 0 | | TERMINAL TEST POINT PCB | 00000 | ORDER BY DESCRIPTION |
| A5A10TP3 | 0360-0535 | 0 | | TERMINAL TEST POINT PCB | 00000 | ORDER BY DESCRIPTION |
| A5A10TP4 | 0360-0535 | 0 | | TERMINAL TEST POINT PCB | 00000 | ORDER BY DESCRIPTION |
| A5A10TP5 | 0360-0535 | 0 | | TERMINAL TEST POINT PCB | 00000 | ORDER BY DESCRIPTION |
| A5A10TP6 | 0360-0535 | 0 | | TERMINAL TEST POINT PCB | 00000 | ORDER BY DESCRIPTION |
| A5A10TP7 | 0360-0535 | 0 | | TERMINAL TEST POINT PCB | 00000 | ORDER BY DESCRIPTION |
| A5A10TP8 | 0360-0535 | 0 | | TERMINAL TEST POINT PCB | 00000 | ORDER BY DESCRIPTION |
| A5A10TP9 | 0360-0535 | 0 | | TERMINAL TEST POINT PCB | 00000 | ORDER BY DESCRIPTION |
| A5A10TP10 | 0360-0535 | 0 | | TERMINAL TEST POINT PCB | 00000 | ORDER BY DESCRIPTION |
| A5A10TP11 | 0360-0535 | 0 | | TERMINAL TEST POINT PCB | 00000 | ORDER BY DESCRIPTION |
| A5A10TP12 | 0360-0535 | 0 | | TERMINAL TEST POINT PCB | 00000 | ORDER BY DESCRIPTION |
| A5A10TP13 | 0360-0535 | 0 | | TERMINAL TEST POINT PCB | 00000 | ORDER BY DESCRIPTION |
| A5A10VR1 | 1902-0176 | 6 | | DIODE-ZNR 47V 5% PD=1W IR=5UA | 28480 | 1902-0176 |
| A5A10VR2 | 1902-0970 | 8 | 2 | DIODE-ZNR 33V 5% DO-35 PD=.4W TC=+.097% | 28480 | 1902-0970 |
| A5A10VR3 | 1902-0966 | 2 | 1 | DIODE-ZNR 22V 5% DO-35 PD=.4W TC=+.093% | 28480 | 1902-0966 |
| A5A10VR4 | 1902-0963 | 9 | 1 | DIODE-ZNR 16V 5% DO-35 PD=.4W TC=+.088% | 28480 | 1902-0963 |
| A5A10VR5 | 1902-3404 | 9 | 1 | DIODE-ZNR 82.6V 5% DO-7 PD=.4W TC=+.082% | 28480 | 1902-3404 |
| A5A10VR6 | 1902-0970 | 8 | | DIODE-ZNR 33V 5% DO-35 PD=.4W TC=+.097% | 28480 | 1902-0970 |
| A5A10VR7 | 1902-0953 | 7 | 1 | DIODE-ZNR 6.2V 5% DO-35 PD=.4W TC=+.053% | 28480 | 1902-0953 |
| A5A10VR8 | 1902-0960 | 6 | 1 | DIODE-ZNR 12V 5% DO-35 PD=.4W TC=+.077% | 28480 | 1902-0960 |
| A5A10VR9 | 1902-3330 | 0 | 1 | DIODE-ZNR 44.2V 2% DO-35 PD=.4W | 28480 | 1902-3330 |
| A5A11 | 86730-60008 | 3 | 1 | BD AY REG. *2* | 28480 | 86730-60008 |
| A5A11MP1 | 0590-0526 | 6 | | THREADED INSERT-NUT 4-40 .065-IN-LG SST | 28480 | 0590-0526 |
| A5A11MP2 | 1251-2313 | 6 | | CONNECTOR-SGL CONT SKT .04-IN-BSC-SZ RND | 28480 | 1251-2313 |
| A5A11MP3 | 1251-8393 | 4 | | CONN-POST TYPE .100-PIN-SPCG 7-CONT | 28480 | 1251-8393 |
| A5A12 | 86730-60007 | 2 | 1 | BD AY REG. *1* | 28480 | 86730-60007 |
| A5A12J1 | 1251-8404 | 8 | | CONN-POST TYPE .100-PIN-SPCG 16-CONT | 28480 | 1251-8404 |
| A5A12MP1 | 0590-0526 | 6 | | THREADED INSERT-NUT 4-40 .065-IN-LG SST | 28480 | 0590-0526 |
| A5A12MP2 | 1251-2313 | 6 | | CONNECTOR-SGL CONT SKT .04-IN-BSC-SZ RND | 28480 | 1251-2313 |
| A5A13A1 | 86730-60050 | 5 | 1 | BD AY PULSE SW | 28480 | 86730-60050 |
| A5A13J1 | 1250-0657 | 5 | 3 | CONNECTOR-RF SMB M SGL-HOLE-FR 50-OHM | 28480 | 1250-0657 |
| A5A13J2 | 1250-0657 | 5 | | CONNECTOR-RF SMB M SGL-HOLE-FR 50-OHM | 28480 | 1250-0657 |
| A5A13J3 | 1250-0657 | 5 | | CONNECTOR-RF SMB M SGL-HOLE-FR 50-OHM | 28480 | 1250-0657 |
| A5A13A1C1 | 0160-3879 | 7 | | CAPACITOR-FXD .01UF +-20% 100VDC CER | 28480 | 0160-3879 |
| A5A13A1C2 | 0160-3879 | 7 | | CAPACITOR-FXD .01UF +-20% 100VDC CER | 28480 | 0160-3879 |
| A5A13A1C3 | 0160-3879 | 7 | | CAPACITOR-FXD .01UF +-20% 100VDC CER | 28480 | 0160-3879 |
| A5A13A1CR1 | 1901-0539 | 3 | | DIODE-SM SIG SCHOTTKY | 28480 | 1901-0539 |
| A5A13A1CR2 | 1901-0539 | 3 | | DIODE-SM SIG SCHOTTKY | 28480 | 1901-0539 |
| A5A13A1R1 | 0698-3438 | 3 | | RESISTOR 147 1% .125W F TC=0+-100 | 24546 | C4-1/8-T0-147R-F |
| A5A13A1R2 | 0698-3438 | 3 | | RESISTOR 147 1% .125W F TC=0+-100 | 24546 | C4-1/8-T0-147R-F |
| A5A13A1R3 | 0698-3438 | 3 | | RESISTOR 147 1% .125W F TC=0+-100 | 24546 | C4-1/8-T0-147R-F |
| A5A13A1R4 | 0757-0401 | 0 | | RESISTOR 100 1% .125W F TC=0+-100 | 24546 | C4-1/8-T0-101-F |
| A5A13A1R5 | 0757-1094 | 9 | | RESISTOR 1.47K 1% .125W F TC=0+-100 | 24546 | C4-1/8-T0-1471-F |
| A5A13A1R6 | 0757-1094 | 9 | | RESISTOR 1.47K 1% .125W F TC=0+-100 | 24546 | C4-1/8-T0-1471-F |
| A5A13A1R7 | 0698-3444 | 1 | | RESISTOR 316 1% .125W F TC=0+-100 | 24546 | C4-1/8-T0-316R-F |
| A5A13A1R8 | 0698-3444 | 1 | | RESISTOR 316 1% .125W F TC=0+-100 | 24546 | C4-1/8-T0-316R-F |
| A5A13A1R9 | 0698-3444 | 1 | | RESISTOR 316 1% .125W F TC=0+-100 | 24546 | C4-1/8-T0-316R-F |
| A5A13A1R10 | 0698-3444 | 1 | | RESISTOR 316 1% .125W F TC=0+-100 | 24546 | C4-1/8-T0-316R-F |
| A5A13A1U1 | 1820-0697 | 2 | 2 | IC DRVR TTL S NAND LINE DUAL 4-INP | 01295 | SN745140N |
| A5A13A1U2 | 1820-0697 | 2 | | IC DRVR TTL S NAND LINE DUAL 4-INP | 01295 | SN745140N |

A5

See introduction to this section for ordering information
*Indicates factory selected value
†Backdating information in Section VII



www.valuetronics.com

Table 6-3. Replaceable Parts

| Reference Designation | HP Part Number | CD | Qty | Description | Mfr Code | Mfr Part Number |
|---|---|---|---|---|---|---|
| A5A13A1VR1 | 1902-0533 | 9 | | DIODE-ZNR 4.99V 2% DO-15 PD=1W TC=-.012% | 28480 | 1902-0533 |
| A5AR1 | 5086-7390 | 2 | 1 | AMPLIFIER-RF | 28480 | 5086-7390 |
| A5AT1 | 0960-0472 | 6 | 1 | ISOLATOR-2 PORT | 28480 | 0960-0472 |
| A5AT2 | 0955-0160 | 8 | 1 | DIODE-SWITCH | 28480 | 0955-0160 |
| A5AT3 | 0955-0184 | 6 | 1 | MICROWAVE SWITCH 4.2GHZ; 80DB ISOLATION | 28480 | 0955-0184 |
| A5AT4 | 08672-60160 | 3 | 1 | SMA COAX ATTEN | 28480 | 08672-60160 |
| A5B1 | 3160-0266 | 3 | 1 | FAN-TBAX 36-CFM 6-16VDC | 28480 | 3160-0266 |
| A5C1 | 0160-4082 | 6 | | CAPACITOR-FDTHRU 1000PF 20% 200V CER | 28480 | 0160-4082 |
| A5C2 | 0160-4082 | 6 | | CAPACITOR-FDTHRU 1000PF 20% 200V CER | 28480 | 0160-4082 |
| A5C3 | 0160-4082 | 6 | | CAPACITOR-FDTHRU 1000PF 20% 200V CER | 28480 | 0160-4082 |
| A5CP1 | 11720-60002 | 8 | 1 | BIAS TEE ASSY | 28480 | 11720-60002 |
| A5CR1 | 86730-60046 | 9 | 1 | DETECTOR | 28480 | 86730-60046 |
| A5DC1 | 0955-0186 | 8 | 1 | COUPLER-MICROWAVE 18.5+-0.5DB | 28480 | 0955-0186 |
| A5F1 | 2110-0043 | 8 | 1 | FUSE 1.5A 250V NTD 1.25X.25 UL | 28480 | 2110-0043 |
| A5F1 | 2110-0083 | 6 | | FUSE 2.5A 250V NTD 1.25X.25 UL | 28480 | 2110-0083 |
| A5FL1 | 86730-60015 | 2 | 1 | FLTR AY WVGUIDE ONLY D | 28480 | 86730-60015 |
| A5FL2 | 0955-0203 | 0 | 1 | FILTER-YIG C ONLY | 28480 | 0955-0203 |
| A5FL2 | 0955-0183 | 5 | 1 | FILTER-YIG D ONLY | 28480 | 0955-0183 |
| A5FL3 | 9135-0196 | 1 | 1 | FILTER-MICROWAVE LOW PASS; CUTOFF FREQ | 28480 | 9135-0196 |
| A5FL4 | 9135-0040 | 4 | 1 | FILTER-LOW PASS SMA FEM-TERMS | 28480 | 9135-0040 |
| A5FL5 | 11720-60009 | 5 | 1 | LOW PASS FILT AY | 28480 | 11720-60009 |
| A5FL6 | 11720-60003 | 9 | 1 | HI PASS FLTR AY | 28480 | 11720-60003 |
| A5FL7 | 9135-0169 | 8 | 1 | FILTER-LOW PASS SMA M/F-TERMS | 28480 | 9135-0169 |
| A5FL8 | 9135-0198 | 3 | 1 | FILTER-MICROWAVE LOW PASS; CUTOFF FREQ | 28480 | 9135-0198 |
| A5G1 | 3160-0310 | 8 | 1 | MODULE-MOTOR SPEED CONTROL FOR FAN | D3976 | 3.431.036.01 |
| A5G2 | 0955-0164 | 2 | 1 | OSCILLATOR-4.2 GHZ | 28480 | 0955-0164 |
| A5J1 | 1250-0102 | 5 | 1 | CONNECTOR-RF BNC FEM SGL-HOLE-FR 50-OHM | 28480 | 1250-0102 |
| A5J2 | 86730-60009 | 4 | 1 | BD AY SPLY PRIM | 28480 | 86730-60009 |
| A5K1 | 86730-60021 | 0 | 2 | SWITCH-6 PORT D ONLY | 28480 | 86730-60021 |
| A5K1 | 86730-60048 | 1 | 2 | SWITCH 5-PORT C ONLY | 28480 | 86730-60048 |
| A5K2 | 86730-60021 | 0 | | SWITCH-6 PORT D ONLY | 28480 | 86730-60021 |
| A5K2 | 86730-60048 | 1 | | SWITCH 5-PORT C ONLY | 28480 | 86730-60048 |
| A5MP1 | 86730-00001 | 0 | 1 | FRONT PANEL | 28480 | 86730-00001 |
| A5MP2 | 86730-00002 | 1 | 1 | FRONT SUB PANEL | 28480 | 86730-00002 |
| A5MP3 | 86730-20033 | 0 | 1 | FRONT FRAME MOD | 28480 | 86730-20033 |
| A5MP4 | | | | NOT ASSIGNED | | |
| A5MP5 | | | | NOT ASSIGNED | | |
| A5MP6 | 5020-8888 | 7 | 2 | SIDE-STRUT-21 | 28480 | 5020-8888 |
| A5MP7 | 86730-00003 | 2 | 1 | REAR PANEL | 28480 | 86730-00003 |
| A5MP8 | 86730-20020 | 5 | 1 | REAR FRAME MOD | 28480 | 86730-20020 |
| A5MP9 | | | | NOT ASSIGNED | | |
| A5MP10 | | | | NOT ASSIGNED | | |
| A5MP11 | | | | NOT ASSIGNED | | |
| A5MP12 | 86730-00006 | 5 | 1 | MAIN DECK | 28480 | 86730-00006 |
| A5MP13 | 86730-00025 | 8 | 1 | BRACE DECK | 28480 | 86730-00025 |
| A5MP14 | 86730-00015 | 6 | 1 | MOD SUPPORT LEFT | 28480 | 86730-00015 |
| A5MP15 | 86730-00016 | 7 | 1 | MOD SUPPORT RIGHT | 28480 | 86730-00016 |
| A5MP16 | 86730-20017 | 0 | 2 | SUPPORT SERVICE | 28480 | 86730-20017 |
| A5MP17 | 86730-20032 | 9 | 2 | SUPPORT TOP MODULE | 28480 | 86730-20032 |
| A5MP18 | 86730-00021 | 4 | 1 | SUPPORT TRANSFORMER BD. | 28480 | 86730-00021 |
| A5MP19 | 86730-00019 | 0 | 1 | BRACE TRANSFORMER | 28480 | 86730-00019 |
| A5MP20 | 86730-00004 | 3 | 1 | RF DECK | 28480 | 86730-00004 |
| A5MP21 | 86730-00008 | 7 | 1 | BRACKET MOD. | 28480 | 86730-00008 |
| A5MP22 | 86730-00007 | 6 | 1 | BRACKET SWITCH D ONLY | 28480 | 86730-00007 |
| A5MP22 | 86730-00023 | 6 | 1 | BRACKET SWITCH C ONLY | 28480 | 86730-00023 |
| A5MP23 | 5041-1418 | 9 | 1 | ROCKER | 28480 | 5041-1418 |
| A5MP24 | 5041-0310 | 8 | 1 | KEY CAP | 28480 | 5041-0310 |

See introduction to this section for ordering information
*Indicates factory selected value
†Backdating information in Section VII



www.valuetronics.com

Table 6-3. Replaceable Parts

| Reference Designation | HP Part Number | C D | Qty | Description | Mfr Code | Mfr Part Number |
|---|---|---|---|---|---|---|
| A5MP25 | 86730-20041 | 0 | 1 | HOUSING SWITCH | 28480 | 86730-20041 |
| A5MP26 | 86730-00022 | 5 | 1 | SWITCH COVER | 28480 | 86730-00022 |
| A5MP27 | 5040-6888 | 5 | 2 | LIGHT PIPE 12MM | 28480 | 5040-6888 |
| A5MP28 | 8160-0477 | 3 | 1 | RFI SHIELD | 28480 | 8160-0477 |
| A5MP29 | 86730-00026 | 9 | 1 | SHIM RFI BASE | 28480 | 86730-00026 |
| A5MP30 | 86730-00027 | 0 | 1 | SHIM RFI TOP | 28480 | 86730-00027 |
| A5MP31 | 86730-00009 | 8 | 1 | SUPPORT HINGE | 28480 | 86730-00009 |
| A5MP32 | 86730-20047 | 6 | 1 | HEAT SINK | 28480 | 86730-20047 |
| A5MP33 | 11729-80001 | 8 | 4 | SPACER FAN | 28480 | 11729-80001 |
| A5MP34 | 3150-0300 | 5 | 1 | AIR FILTER | 28480 | 3150-0300 |
| A5MP35 | 0360-0016 | 2 | 1 | SOLDER LUG | 28480 | 0360-0016 |
| A5MP36 | 86730-20035 | 2 | 1 | MOUNT AMP | 28480 | 86730-20035 |
| A5MP37 | 86730-20036 | 3 | 1 | YTF MOUNT | 28480 | 86730-20036 |
| A5MP38 | 86730-00010 | 1 | 1 | BRACKET COUPLER | 28480 | 86730-00010 |
| A5MP39 | 86730-00013 | 4 | 1 | MODULE TOP COVER | 28480 | 86730-00013 |
| A5MP40 | 86730-00014 | 5 | 1 | MODULE BTM COVER | 28480 | 86730-00014 |
| A5MP41 | 86730-20034 | 1 | 1 | SHIELD PRIMARY | 28480 | 86730-20034 |
| A5MP42 | | | | NOT ASSIGNED | | |
| A5MP43 | | | | NOT ASSIGNED | | |
| A5MP44 | | | | NOT ASSIGNED | | |
| A5MP45 | | | | NOT ASSIGNED | | |
| A5MP46 | | | | NOT ASSIGNED | | |
| A5MP47 | 86730-20018 | 1 | 1 | BOARD GUIDE | 28480 | 86730-20018 |
| A5MP48 | 0403-0491 | 9 | 1 | PCB GUIDE | 28480 | 0403-0491 |
| A5MP49 | 0400-0005 | 5 | 1 | GROMMET .58D | 28480 | 0400-0005 |
| A5MP50 | 0400-0009 | 9 | 1 | GROMMET .125D | 28480 | 0400-0009 |
| A5MP51 | 0400-0010 | 2 | 1 | GROMMET .250 | 28480 | 0400-0010 |
| A5MP52 | 0400-0082 | 8 | 1 | CHANNEL GROMMET | 28480 | 0400-0082 |
| A5MP53-A5MP60 | | | | NOT ASSIGNED | | |
| A5MP61 | 0510-1148 | 2 | 4 | RETAINER-PUSH ON KB-TO-SHFT EXT | 28480 | 0510-1148 |
| A5MP62 | 1200-0043 | 8 | 7 | INSULATOR-XSTR ALUMINUM | 28480 | 1200-0043 |
| A5MP63 | 1200-0081 | 4 | | INSULATOR-FLG-BSHG NYLON | 28480 | 1200-0081 |
| A5MP64 | 0380-0560 | 3 | 4 | SPACER-RND .188-IN-LG .14-IN-ID | 28480 | 0380-0560 |
| A5MP65 | 2190-0007 | 2 | 14 | WASHER-LK INTL T NO. 6 .141-IN-ID | 28480 | 2190-0007 |
| A5MP66 | 2190-0018 | 5 | 2 | WASHER-LK HLCL NO. 6 .141-IN-ID | 28480 | 2190-0018 |
| A5MP67 | 2190-0019 | 6 | 20 | WASHER-LK HLCL NO. 4 .115-IN-ID | 28480 | 2190-0019 |
| A5MP68 | 2190-0049 | 2 | 2 | WASHER-LK HLCL NO. 0 .065-IN-ID | 28480 | 2190-0049 |
| A5MP69 | 2190-0124 | 4 | | WASHER-LK INTL T NO. 10 .195-IN-ID | 28480 | 2190-0124 |
| A5MP70 | 2190-0401 | 0 | 8 | WASHER-FL NM NO. 4 .12-IN-ID .312-IN-OD | 28480 | 2190-0401 |
| A5MP71 | 0362-0227 | 1 | 2 | CONNECTOR-SGL CONT SKT 1.14-MM-BSC-SZ | 28480 | 0362-0227 |
| A5MP72 | 0590-0076 | 1 | 4 | NUT-HEX-PLSTC LKG 4-40-THD .143-IN-THK | 28480 | 0590-0076 |
| A5MP73 | 1200-0147 | 3 | 8 | INSULATOR-FLG-BSHG NYLON | 28480 | 1200-0147 |
| A5MP74 | 2190-0068 | 5 | 1 | WASHER-LK INTL T 1/2 IN .505-IN-ID | 28480 | 2190-0068 |
| A5MP75 | 2200-0091 | 7 | 4 | SCREW-MACH 4-40 .562-IN-LG PAN-HD-POZI | 00000 | ORDER BY DESCRIPTION |
| A5MP76 | 2200-0101 | 0 | 4 | SCREW-MACH 4-40 .188-IN-LG PAN-HD-POZI | 00000 | ORDER BY DESCRIPTION |
| A5MP77 | 2200-0103 | 2 | | SCREW-MACH 4-40 .25-IN-LG PAN-HD-POZI | 28480 | 2200-0103 |
| A5MP78 | 2200-0105 | 4 | | SCREW-MACH 4-40 .312-IN-LG PAN-HD-POZI | 00000 | ORDER BY DESCRIPTION |
| A5MP79 | 2200-0107 | 6 | 15 | SCREW-MACH 4-40 .375-IN-LG PAN-HD-POZI | 00000 | ORDER BY DESCRIPTION |
| A5MP80 | 2200-0141 | 8 | 8 | SCREW-MACH 4-40 .312-IN-LG PAN-HD-POZI | 28480 | 2200-0141 |
| A5MP81 | 2200-0149 | 6 | 2 | SCREW-MACH 4-40 .625-IN-LG PAN-HD-POZI | 00000 | ORDER BY DESCRIPTION |
| A5MP82 | 2200-0153 | 2 | 2 | SCREW-MACH 4-40 .875-IN-LG PAN-HD-POZI | 00000 | ORDER BY DESCRIPTION |
| A5MP83 | 2200-0164 | 5 | 2 | SCREW-MACH 4-40 .188-IN-LG UNCT 82 DEG | 00000 | ORDER BY DESCRIPTION |
| A5MP84 | 2200-0801 | 5 | 4 | SCREW-MACH 4-40 .188-IN-LG UNCT 82 DEG ONLY D STANDARD | 28480 | 2200-0801 |
| A5MP85 | 1400-0510 | 8 | 10 | CLAMP-CABLE .15-DIA .62-WD NYL | 28480 | 1400-0510 |
| A5MP86 | 1400-0611 | 0 | 3 | CLAMP-FL-CA 1-WD | 06915 | CFCC-8 |
| A5MP87 | 1400-0757 | 5 | 4 | CLAMP-CABLE .25-DIA 1-WD PVC | 28480 | 1400-0757 |
| A5MP88 | 2360-0113 | 2 | 14 | SCREW-MACH 6-32 .25-IN-LG PAN-HD-POZI | 00000 | ORDER BY DESCRIPTION |
| A5MP89 | 2360-0115 | 4 | 34 | SCREW-MACH 6-32 .312-IN-LG PAN-HD-POZI | 00000 | ORDER BY DESCRIPTION |
| A5MP90 | 2360-0117 | 6 | | SCREW-MACH 6-32 .375-IN-LG PAN-HD-POZI ONLY C STANDARD | 00000 | ORDER BY DESCRIPTION |
| A5MP91 | 2360-0118 | 7 | 4 | SCREW-MACH 6-32 .375-IN-LG 82 DEG | 00000 | ORDER BY DESCRIPTION |
| A5MP92 | 2360-0119 | 8 | 1 | SCREW-MACH 6-32 .438-IN-LG PAN-HD-POZI | 00000 | ORDER BY DESCRIPTION |
| A5MP93 | 2360-0120 | 1 | 2 | SCREW-MACH 6-32 .438-IN-LG 82 DEG | 00000 | ORDER BY DESCRIPTION |

A5

See introduction to this section for ordering information
*Indicates factory selected value
†Backdating information in Section VII



www.valuetronics.com

Table 6-3. Replaceable Parts

| Reference Designation | HP Part Number | C D | Qty | Description | Mfr Code | Mfr Part Number |
|---|---|---|---|---|---|---|
| A5MP94 | 2360-0121 | 2 | 1 | SCREW-MACH 6-32 .5-IN-LG PAN-HD-POZI | 00000 | ORDER BY DESCRIPTION |
| A5MP95 | 2360-0123 | 4 | 9 | SCREW-MACH 6-32 .625-IN-LG PAN-HD-POZI | 00000 | ORDER BY DESCRIPTION |
| A5MP96 | 2360-0198 | 1 | 4 | SCREW-MACH 6-32 .375-IN-LG 100 DEG | 00000 | ORDER BY DESCRIPTION |
| A5MP97 | 2360-0201 | 9 | 2 | SCREW-MACH 6-32 .5-IN-LG PAN-HD-POZI | 00000 | ORDER BY DESCRIPTION |
| A5MP98 | 2360-0333 | 8 | 3 | SCREW-MACH 6-32 .25-IN-LG 100 DEG | 28480 | 2360-0333 |
| A5MP99 | 2360-0334 | 9 | 4 | SCREW-MACH 6-32 .312-IN-LG 100 DEG | 28480 | 2360-0334 |
| A5MP100 | 2420-0001 | 5 | 4 | NUT-HEX-W/LKWR 6-32-THD .109-IN-THK | 00000 | ORDER BY DESCRIPTION |
| A5MP101 | 2420-0003 | 7 | 7 | NUT-HEX-DBL-CHAM 6-32-THD .094-IN-THK | 28480 | 2420-0003 |
| A5MP102 | 2200-0109 | 8 | 8 | SCREW-MACH 4-40 .438-IN-LG PAN-HD-POZI | 00000 | ORDER BY DESCRIPTION |
| A5MP103 | 2200-0117 | 8 | 2 | SCREW-MACH 4-40 .875-IN-LG PAN-HD-POZI | 00000 | ORDER BY DESCRIPTION |
| A5MP104 | 2200-0121 | 4 | 2 | SCREW-MACH 4-40 1.125-IN-LG PAN-HD-POZI | 00000 | ORDER BY DESCRIPTION |
| A5MP105 | 2200-0123 | 6 | 2 | SCREW-MACH 4-40 1.25-IN-LG PAN-HD-POZI | 00000 | ORDER BY DESCRIPTION |
| A5MP106 | 2260-0001 | 5 | 2 | NUT-HEX-DBL-CHAM 4-40-THD .094-IN-THK | 28480 | 2260-0001 |
| A5MP107 | 2190-0017 | 4 | 8 | WASHER-LK HLCL NO. 8 .168-IN-ID | 28480 | 2190-0017 |
| A5MP108 | 7120-4296 | 7 | 3 | LABEL-WARNING .688-IN-WD 1.5-IN-LG AL | 28480 | 7120-4296 |
| A5MP109 | 11720-00012 | 4 | 1 | LABEL-DIODE | 28480 | 11720-00012 |
| A5MP110 | 2510-0136 | 8 | 8 | SCREW-MACH 8-32 2.5-IN-LG PAN-HD-POZI | 00000 | ORDER BY DESCRIPTION |
| A5MP111 | 2510-0192 | 6 | 4 | SCREW-MACH 8-32 .25-IN-LG 100 DEG | 00000 | ORDER BY DESCRIPTION |
| A5MP112 | 2510-0195 | 9 | 4 | SCREW-MACH 8-32 .375-IN-LG 100 DEG | 28480 | 2510-0195 |
| A5MP113 | 2580-0003 | 5 | 8 | NUT-HEX-W/LKWR 8-32-THD .125-IN-THK | 00000 | ORDER BY DESCRIPTION |
| A5MP114 | 2950-0054 | 1 | 1 | NUT-HEX-DBL-CHAM 1/2-28-THD .125-IN-THK | 00000 | ORDER BY DESCRIPTION |
| A5MP115 | 2950-0078 | 9 | | NUT-HEX-DBL-CHAM 10-32-THD .067-IN-THK | 28480 | 2950-0078 |
| A5MP116-A5MP119 | | | | NOT ASSIGNED | | |
| A5MP120 | 3030-0422 | 8 | 2 | SCREW-SKT HD CAP 0-80 .188-IN-LG SST-302 | 00000 | ORDER BY DESCRIPTION |
| A5MP121 | 3050-0010 | 2 | 2 | WASHER-FL MTLC NO. 6 .147-IN-ID | 28480 | 3050-0010 |
| A5MP122 | 3050-0105 | 6 | 12 | WASHER-FL MTLC NO. 4 .125-IN-ID | 28480 | 3050-0105 |
| A5MP123 | 3050-0139 | 6 | 8 | WASHER-FL MTLC NO. 8 .172-IN-ID | 28480 | 3050-0139 |
| A5MP124 | | | | NOT ASSIGNED | | |
| A5Q1 | 1853-0344 | 5 | 1 | TRANSISTOR PNP 2N5876 SI TO-3 PD=150W | 04713 | 2N5876 |
| A5R1 | | | | NOT ASSIGNED | | |
| A5R2 | 0811-3477 | 2 | 1 | RESISTOR 25 1% 25W PW TC=0+-2 | 28480 | 0811-3477 |
| A5S1 | 3101-2080 | 9 | 1 | SWITCH-RKR BASIC DPDT 3A 250VAC SLDR-LUG | 28480 | 3101-2080 |
| A5T1 | 9100-4331 | 1 | 1 | TRANSFORMER-PWR | 28480 | 9100-4331 |
| A5T2 | 9100-4332 | 2 | 1 | TRANSFORMER-PWR | 28480 | 9100-4332 |
| A5U1 | 0955-0167 | 5 | 1 | MIXER-DC 2GHZ | 28480 | 0955-0167 |
| A5U2 | 1826-0837 | 4 | 3 | IC V RGLTR-ADJ-POS 1.2/32V TO-3 PKG | 28480 | 1826-0837 |
| A5U3 | 1826-0203 | 8 | 1 | IC 7815 V RGLTR TO-3 | 07263 | 7815KC |
| A5U4 | 1826-0523 | 5 | 2 | IC 337 V RGLTR TO-3 | 27014 | LM337K |
| A5U5 | 1826-0523 | 5 | | IC 337 V RGLTR TO-3 | 27014 | LM337K |
| A5U6 | 1826-0837 | 4 | | IC V RGLTR-ADJ-POS 1.2/32V TO-3 PKG | 28480 | 1826-0837 |
| A5U7 | 1826-0837 | 4 | | IC V RGLTR-ADJ-POS 1.2/32V TO-3 PKG | 28480 | 1826-0837 |
| A5U8 | 0960-0443 | 1 | 1 | LINE MODULE-FILTERED (P/O A5W12) | 28480 | 0960-0443 |
| A5W1 | 86730-60040 | 3 | 1 | CBL AY ALC IN | 28480 | 86730-60040 |
| A5W2 | 86730-60042 | 5 | 1 | CBL AY ALC 73 | 28480 | 86730-60042 |
| A5W3 | 86730-60041 | 4 | 1 | CBL AY ALC OUT | 28480 | 86730-60041 |
| A5W4 | 86730-60038 | 9 | 1 | CBL AY AM OUT | 28480 | 86730-60038 |
| A5W5 | 86730-60039 | 0 | 1 | CBL AY AM 73 | 28480 | 86730-60039 |
| A5W6 | 86730-60037 | 8 | 1 | CBL AY AM IN | 28480 | 86730-60037 |
| A5W7 | 86730-60034 | 5 | 1 | CBL AY PULSE IN | 28480 | 86730-60034 |
| A5W8 | 86730-60036 | 7 | 1 | CBL AY PULSE 73 | 28480 | 86730-60036 |
| A5W9 | 86730-60035 | 6 | 1 | CBL AY PULSE OUT | 28480 | 86730-60035 |
| A5W10 | 86730-60033 | 4 | 1 | CBL YTV | 28480 | 86730-60033 |
| A5W11 | 86730-60029 | 8 | 1 | CBL FRONT PANEL OUTPUT | 28480 | 86730-60029 |
| A5W12 | 86730-60031 | 2 | 1 | CBL POWER LINE (INCL A5U8) | 28480 | 86730-60031 |
| A5W13 | 86730-60043 | 6 | 1 | CBL AY BIAS TEE | 28480 | 86730-60043 |
| A5W14 | 86730-60028 | 7 | 1 | CBL AY-PULSE MOD | 28480 | 86730-60028 |
| A5W15 | 86730-60044 | 7 | 1 | CBL AY ALC MOD | 28480 | 86730-60044 |
| A5W16 | 86730-20044 | 3 | 1 | CBL AY YIG-S PT ONLY C | 28480 | 86730-20044 |
| A5W16 | 86730-20030 | 7 | 1 | CBL SW OUT-YIG ONLY D | 28480 | 86730-20030 |
| A5W17 | 86730-60045 | 8 | 1 | CBL AY DETECTOR | 28480 | 86730-60045 |
| A5W18 | 86730-20045 | 4 | 1 | CBL AY CPLR-S PT ONLY C | 28480 | 86730-20045 |
| A5W18 | 86730-20023 | 8 | 1 | CBL AY CPLR-SW1 ONLY D | 28480 | 86730-20023 |

See introduction to this section for ordering information
*Indicates factory selected value
†Backdating information in Section VII



www.valuetronics.com

Table 6-3. Replaceable Parts

| Reference Designation | HP Part Number | C D | Qty | Description | Mfr Code | Mfr Part Number |
|---|---|---|---|---|---|---|
| A5W19 | 86730-20027 | 2 | 2 | CBL 3.6GHZ FILTR | 28480 | 86730-20027 |
| A5W20 | 86730-20027 | 2 | | CBL 3.6GHZ FILTR | 28480 | 86730-20027 |
| A5W21 | 86730-20028 | 3 | 2 | CBL 6.2GHZ FILTR | 28480 | 86730-20028 |
| A5W22 | 86730-20028 | 3 | | CBL 6.2GHZ FILTR | 28480 | 86730-20028 |
| A5W23 | 86730-60020 | 9 | 1 | CBL AY-PHASE LCK | 28480 | 86730-60020 |
| A5W24 | 86730-20011 | 4 | 1 | CBL AY OSC-ISO | 28480 | 86730-20011 |
| A5W25 | 86730-20012 | 5 | 1 | CBL AY ISO-BS TE | 28480 | 86730-20012 |
| A5W26 | 1250-1397 | 2 | 2 | ADAPTER-COAX RTANG M-SMA M-SMA | 28480 | 1250-1397 |
| A5W27 | 86730-20013 | 6 | 1 | CBL AY ALC-LPF | 28480 | 86730-20013 |
| A5W28 | 86730-20014 | 7 | 1 | CBL AY LPF-PAD | 28480 | 86730-20014 |
| A5W29 | 86730-20010 | 3 | 1 | CABL AY MIX-AMP | 28480 | 86730-20010 |
| A5W30 | 1250-1397 | 2 | | ADAPTER-COAX RTANG M-SMA M-SMA | 28480 | 1250-1397 |
| A5W31 | 86730-20022 | 7 | 1 | CBL AY AMP-LPF | 28480 | 86730-20022 |
| A5W32 | 86730-20025 | 0 | 1 | CBL AY CPLR-LPF | 28480 | 86730-20025 |
| A5W33 | 86730-20024 | 9 | 1 | CBL AY CPLR-DET | 28480 | 86730-20024 |
| A5W34 | 86730-20021 | 6 | 1 | CBL AY SW1-MIX ONLY D | 28480 | 86730-20021 |
| A5W34 | 86730-20046 | 5 | 1 | CBL AY 5 PT-MIX ONLY C | 28480 | 86730-20046 |
| A5W35 | 86730-20031 | 8 | 2 | CBL AY SW IN-HPF ONLY D | 28480 | 86730-20031 |
| A5W36 | 86730-20031 | 8 | | CBL AY SW IN-HPF ONLY D | 28480 | 86730-20031 |
| A5W37 | 86730-20029 | 4 | 1 | CBL AY SW IN-YIG ONLY D | 28480 | 86730-20029 |
| A5W37 | 86730-20043 | 2 | 1 | CBL AY 5 PT-YIG ONLY C | 28480 | 86730-20043 |
| A5W38-A5W80 | | | | NOT ASSIGNED | | |
| A5W81 | 86730-60025 | 4 | 1 | CABLE OUTPUT SUPPLY | 28480 | 86730-60025 |
| A5W82 | 86730-60026 | 5 | 1 | CABLE OUTPUT PROCESS | 28480 | 86730-60026 |
| A5W83 | 86730-60027 | 6 | 1 | CABLE RF SUPPLY | 28480 | 86730-60027 |
| A5W84 | 86730-60022 | 1 | 1 | CABLE PROCESS SUPPLY | 28480 | 86730-60022 |
| A5W85 | 86730-60023 | 2 | 1 | CABLE AY REG #1 | 28480 | 86730-60023 |
| A5W86 | 86730-60024 | 3 | 1 | CABLE AY REG #2 | 28480 | 86730-60024 |

A5

See introduction to this section for ordering information
*Indicates factory selected value
†Backdating information in Section VII



www.valuetronics.com

## Table 6-3. Replaceable Parts

| Reference Designation | HP Part Number | C D | Qty | Description | Mfr Code | Mfr Part Number |
|---|---|---|---|---|---|---|
| | | | | CHASSIS/MISCELLANEOUS PARTS | | |
| MP1 | 0361-0316 | 7 | 2 | RIVET-BLIND | 28480 | 0361-0316 |
| MP2 | 0570-0034 | 9 | 5 | SCREW-MACH 4-40 .25-IN-LG RD-HD-SLT | 00000 | ORDER BY DESCRIPTION |
| MP3 | 0570-0632 | 3 | 4 | SCREW-SPCL 4-40 .312-IN-LG PAN-HD-POZI | 00000 | ORDER BY DESCRIPTION |
| MP4 | 0624-0268 | 6 | 24 | SCREW-TPG 4-24 .375-IN-LG PAN-HD-POZI | 00000 | ORDER BY DESCRIPTION |
| MP5 | 1400-0082 | 9 | 2 | CLAMP-CABLE .125-DIA .375-WD NYL | 28480 | 1400-0082 |
| MP6 | 1460-0553 | 5 | 7 | STAMPING-BE-CU CLIP-WINDOW | 28480 | 1460-0553 |
| MP7 | 1494-0016 | 6 | 1 | SLIDE-CHAS 24.81-LG 25.53-TRVL | 28480 | 1494-0016 |
| MP8 | 2190-0018 | 5 | 4 | WASHER-LK HLCL NO. 6 .141-IN-ID | 28480 | 2190-0018 |
| MP9 | 2190-0019 | 6 | 6 | WASHER-LK HLCL NO. 4 .115-IN-ID | 28480 | 2190-0019 |
| MP10 | 2200-0103 | 2 | 6 | SCREW-MACH 4-40 .25-IN-LG PAN-HD-POZI | 28480 | 2200-0103 |
| MP11 | 2200-0105 | 4 | 24 | SCREW-MACH 4-40 .312-IN-LG PAN-HD-POZI | 00000 | ORDER BY DESCRIPTION |
| MP12 | 2200-0138 | 3 | 19 | SCREW-MACH 4-40 .188-IN-LG 100 DEG | 28480 | 2200-0138 |
| MP13 | 2200-0141 | 8 | 2 | SCREW-MACH 4-40 .312-IN-LG PAN-HD-POZI | 28480 | 2200-0141 |
| MP14 | 2200-0145 | 2 | 4 | SCREW-MACH 4-40 .438-IN-LG PAN-HD-POZI | 00000 | ORDER BY DESCRIPTION |
| MP15 | 2200-0151 | 0 | 2 | SCREW-MACH 4-40 .75-IN-LG PAN-HD-POZI | 00000 | ORDER BY DESCRIPTION |
| MP16 | 2360-0113 | 2 | 1 | SCREW-MACH 6-32 .25-IN-LG PAN-HD-POZI | 00000 | ORDER BY DESCRIPTION |
| MP17 | 2360-0115 | 4 | 2 | SCREW-MACH 6-32 .312-IN-LG PAN-HD-POZI | 00000 | ORDER BY DESCRIPTION |
| MP18 | 2360-0117 | 6 | 5 | SCREW-MACH 6-32 .375-IN-LG PAN-HD-POZI | 00000 | ORDER BY DESCRIPTION |
| MP19 | 2360-0195 | 0 | 4 | SCREW-MACH 6-32 .312-IN-LG PAN-HD-POZI | 28480 | 2360-0195 |
| MP20 | 2360-0197 | 2 | 1 | SCREW-MACH 6-32 .375-IN-LG PAN-HD-POZI | 28480 | 2360-0197 |
| MP21 | 2360-0229 | 1 | 3 | SCREW-MACH 6-32 .562-IN-LG PAN-HD-POZI | 00000 | ORDER BY DESCRIPTION |
| MP22 | 2360-0333 | 8 | 11 | SCREW-MACH 6-32 .25-IN-LG 100 DEG | 28480 | 2360-0333 |
| MP23 | 2360-0334 | 9 | 2 | SCREW-MACH 6-32 .312-IN-LG 100 DEG | 28480 | 2360-0334 |
| MP24 | 2420-0001 | 5 | 2 | NUT-HEX-W/LKWR 6-32-THD .109-IN-THK | 00000 | ORDER BY DESCRIPTION |
| MP25 | 2680-0100 | 5 | 4 | SCREW-MACH 10-32 .375-IN-LG 100 DEG | 00000 | ORDER BY DESCRIPTION |
| MP26 | 3030-0152 | 1 | 2 | SCREW-SET 4-40 .312-IN-LG SMALL CUP-PT | 28480 | 3030-0152 |
| MP27 | 3050-0010 | 2 | 2 | WASHER-FL MTLC NO. 6 .147-IN-ID | 28480 | 3050-0010 |
| MP28 | 3050-0105 | 6 | 6 | WASHER-FL MTLC NO. 4 .125-IN-ID | 28480 | 3050-0105 |
| MP29 | 5040-7201 | 8 | 4 | FOOT (STANDARD) | 28480 | 5040-7201 |
| MP30 | 5040-7202 | 9 | 1 | TRIM, TOP | 28480 | 5040-7202 |
| MP31 | 5040-7219 | 8 | 2 | HANDLE, CAP-FRONT | 28480 | 5040-7219 |
| MP32 | 5040-7220 | 1 | 2 | HANDLE, CAP-REAR | 28480 | 5040-7220 |
| MP33 | 5040-7221 | 2 | 4 | STANDOFF, REAR PANEL | 28480 | 5040-7221 |
| MP34 | 5041-1829 | 6 | 1 | KEY/QTR SHORT DB (EXCEPT OPT 1 & 5) | 28480 | 5041-1829 |
| MP35 | 5041-2796 | 8 | 1 | KEY CAP (OPTION 1 & 5) | 28480 | 5041-2796 |
| MP36 | 5041-2797 | 9 | 1 | KEY CAP (OPTION 1 & 5) | 28480 | 5041-2797 |
| MP37 | 5060-9805 | 4 | 2 | STRAP HLD 21 IN | 28480 | 5060-9805 |
| MP38 | 5060-9836 | 1 | 1 | COVER TOP 21 IN | 28480 | 5060-9836 |
| MP39 | 5060-9848 | 5 | 1 | COVER BOTTOM 21 FM | 28480 | 5060-9848 |
| MP40 | 5061-0074 | 3 | 1 | RACK FLANGE KIT (OPT 908) | 28480 | 5061-0074 |
| MP41 | 5061-0077 | 6 | 1 | RACK FLANGE KIT OPT. 908 | 28480 | 5061-0077 |
| MP42 | 5061-0091 | 4 | 1 | HDL KIT FRONT | 28480 | 5061-0091 |
| MP43 | 5061-2034 | 9 | 1 | INFO TRAY KIT | 28480 | 5061-2034 |
| MP44 | 5061-2073 | 6 | 1 | RACK MT. HANDLES (OPT 913 ONLY) | 28480 | 5061-2073 |
| MP45 | 08672-20120 | 1 | 12 | STEPWASHER | 28480 | 08672-20120 |
| MP46 | 08673-00009 | 4 | 1 | COVER, DCU | 28480 | 08673-00009 |
| MP47 | 08673-00048 | 1 | 1 | COVER BOTTOM | 28480 | 08673-00048 |
| MP48 | 08673-00054 | 9 | 1 | COVER REAR FRAME | 28480 | 08673-00054 |
| MP49 | 08673-00058 | 3 | 1 | COVER, RF SECTION | 28480 | 08673-00058 |
| MP50 | 08673-20064 | 3 | 1 | INSULATOR, M/B | 28480 | 08673-20064 |
| MP51 | 08673-20119 | 9 | 1 | WINDOW FRONT "C" | 28480 | 08673-20119 |
| MP51 | 08673-20120 | 2 | 1 | WINDOW FRONT "D" | 28480 | 08673-20120 |
| MP52 | 08673-20132 | 6 | 1 | SHIELD RFI | 28480 | 08673-20132 |
| MP53 | 08673-80028 | 5 | 1 | PAD-FOAM FRONT | 28480 | 08673-80028 |
| MP54 | 08673-80029 | 6 | 1 | PAD-FOAM REAR | 28480 | 08673-80029 |
| MP55 | 08673-80030 | 9 | 1 | COVER-FRONT ABS | 28480 | 08673-80030 |
| MP56 | 85660-20090 | 2 | 4 | STEPWASHER | 28480 | 85660-20090 |

See introduction to this section for ordering information
*Indicates factory selected value
†Backdating information in Section VII



www.valuetronics.com

Table 6-3. Replaceable Parts

| Reference Designation | HP Part Number | C D | Qty | Description | Mfr Code | Mfr Part Number |
|---|---|---|---|---|---|---|
| MP57 | 86701-00022 | 0 | 1 | COVER GUARD | 28480 | 86701-00022 |
| MP58 | 86730-00017 | 8 | 1 | CVR. RT. SIDE 21" | 28480 | 86730-00017 |
| MP59 | 86730-00018 | 9 | 1 | CVR LFT SIDE 21" | 28480 | 86730-00018 |
| MP60 | 5021-5960 | 2 | 6 | LINK LOCK | 28480 | 5021-5960 |
| MP61 | 1460-1345 | 5 | 2 | TILT STAND SST | 28480 | 1460-1345 |
| MP62 | 5001-0439 | 8 | 2 | TRIM SIDE FRT FRAME | 28480 | 5001-0439 |
| MP63 | 08673-20141 | 7 | 1 | TOP COVER SHIELD | 28480 | 08673-20141 |
| MP64 | 08673-20142 | 8 | 1 | YTM SIDE SHIELD | 28480 | 08673-20142 |
| MP65 | 08673-20143 | 9 | 1 | YTM TOP SHIELD | 28480 | 08673-20143 |
| MP66 | 08673-20144 | 0 | 1 | SIDE COVER SHIELD | 28480 | 08673-20144 |
| MP67 | 0570-1171 | 7 | 1 | SCREW-SPCL 6-32 .468-IN-LG UNCT 100 | 00000 | ORDER BY DESCRIPTION |
| MP68 | 0510-0043 | 4 | 1 | RETAINER-RING E-R EXT .141-IN-DIA STL | 28480 | 0510-0043 |
| MP69 | 2360-0333 | 8 | | SCREW-MACH 6-32 .25-IN-LG 100 DEG | 28480 | 2360-0333 |
| W1 | 08672-60057 | 7 | 1 | CABLE ASSY 20 COND | 28480 | 08672-60057 |
| W2 | 08673-60023 | 8 | 1 | CABLE ASSY 50 COND | 28480 | 08673-60023 |
| W3 | 08673-60022 | 7 | 1 | CABLE ASSY 40 COND | 28480 | 08673-60022 |
| W4 | 08673-60092 | 1 | 1 | CABLE ASSY RBN 16 PN | 28480 | 08673-60092 |
| W5 | 08673-60086 | 3 | 1 | CABLE ASSY CNTR IFCE | 28480 | 08673-60086 |
| W6 | 8120-1378 | 1 | 2 | CABLE ASSY 18AWG 3-CNDCT JGK-JKT | 28480 | 8120-1378 |
| W7 | 08673-20048 | 3 | 1 | CABLE ASSY, DIR CPLR-PREAMP | 28480 | 08673-20048 |
| W8-W50 | | | | NOT ASSIGNED | | |
| W51 | 86730-60030 | 1 | 1 | CABLE ASSY, METER VERNR | 28480 | 86730-60030 |
| W52 | 08673-20091 | 6 | 1 | CABLE ASSY SI OUTPUT | 28480 | 08673-20091 |
| W53 | 08673-20092 | 7 | 1 | CABLE ASSY SI INPUT | 28480 | 08673-20092 |
| W54 | 08673-60050 | 1 | 1 | CABLE ASSY ALC INT FC | 28480 | 08673-60050 |
| W55 | 08673-60051 | 2 | 1 | CABLE ASSY PM INTFC | 28480 | 08673-60051 |
| W56 | 08673-60052 | 3 | 1 | CABLE ASSY AMP INTFC | 28480 | 08673-60052 |
| W57 | 1250-1391 | 6 | 1 | ADAPTER-COAX TEE M-SMB F-SMB M-SMB | 28480 | 1250-1391 |
| W58 | 08673-60054 | 5 | 1 | CABLE ASSY, YTM TUNE INTFC | 28480 | 08673-60054 |
| W59 | 86730-60051 | 6 | 1 | CABLE ASSY PROCESSOR | 28480 | 86730-60051 |
| W60 | 8120-2682 | 2 | 1 | A5 TO A3 100MHZ REF | 28480 | 8120-2682 |
| W61 | 8120-1378 | 1 | | CABLE ASSY 18AUG 3-CNDCT JGK-JKT | 28480 | 8120-1378 |
| W62 | 86701-60063 | 5 | 1 | INT-EXT | 28480 | 86701-60063 |
| | 08673-60097 | 6 | 1 | KIT EXTENDER 8D | 28480 | 08673-60097 |
| | 08673-90002 | 6 | 1 | MANUAL OPER-SERV (OPT 910) | 28480 | 08673-90002 |
| | 10811-90002 | 9 | 1 | SERVICE MANUAL (EXCEPT OPT 2) | 28480 | 10811-90002 |
| | | | | ACCESSORY PARTS | | |
| | 1250-1745 | 4 | 1 | CONNECTOR-RF APC-N FEM 50-OHM | 28480 | 1250-1745 |
| | 1250-1749 | 8 | 1 | ADAPTER-COAX STR F-APC-3.5 F-APC-3.5 | 28480 | 1250-1749 |

See introduction to this section for ordering information
*Indicates factory selected value
†Backdating information in Section VII



www.valuetronics.com

Table 6-4. Code List of Manufacturers

| Mfr Code | Manufacturer Name | Address | | Zip Code |
|---|---|---|---|---|
| 03976 | BUEHLER GEBR NACHFOLGER GMBH | NURNBERG | GM | 7750 |
| 80545 | NIPPON ELECTRIC CO | TOKYO | JP | |
| 00000 | ANY SATISFACTORY SUPPLIER | | | |
| 00115 | ACE GLASS INC | VINELAND | NJ | 08360 |
| 01121 | ALLEN-BRADLEY CO | MILWAUKEE | WI | 53204 |
| 01281 | TRW INC SEMICONDUCTOR DIV | LAWNDALE | CA | 90260 |
| 01295 | TEXAS INSTR INC SEMICOND CMPNT DIV | DALLAS | TX | 75222 |
| 02111 | SPECTROL ELECTRONICS CORP | CITY OF IND | CA | 91745 |
| 03508 | GE CO SEMICONDUCTOR PROD DEPT | AUBURN | NY | 13201 |
| 03888 | K D I PYROFILM CORP | WHIPPANY | NJ | 07981 |
| 04713 | MOTOROLA SEMICONDUCTOR PRODUCTS | PHOENIX | AZ | 85008 |
| 05820 | WAKEFIELD ENGINEERING INC | WAKEFIELD | MA | 01880 |
| 06001 | MEPCO ELECTRA CORP | COLUMBIA | SC | 29063 |
| 06383 | PANDUIT CORP | TINLEY PARK | IL | 60477 |
| 06665 | PRECISION MONOLITHICS INC | SANTA CLARA | CA | 95050 |
| 06915 | RICHCO PLASTIC CO | CHICAGO | IL | 60646 |
| 07263 | FAIRCHILD SEMICONDUCTOR DIV | MOUNTAIN VIEW | CA | 94042 |
| 07933 | RAYTHEON CO SEMICONDUCTOR DIV HQ | MOUNTAIN VIEW | CA | 94040 |
| 1F556 | PRECISION LAMP INC | COTATI | CA | 94040 |
| 12969 | UNITRODE CORP | WATERTOWN | MA | 02172 |
| 14140 | EDISON ELEK DIV MCGRAW-EDISON | MANCHESTER | NH | 03130 |
| 16179 | OMNI SPECTRA INC | FARMINGTON | MI | 03054 |
| 17856 | SILICONIX INC | SANTA CLARA | CA | 95054 |
| 18324 | SIGNETICS CORP | SUNNYVALE | CA | 94086 |
| 19701 | MEPCO/ELECTRA CORP | MINERAL WELLS | TX | 76067 |
| 20932 | EMCON DIV ITW | SAN DIEGO | CA | 92129 |
| 20940 | MICRO-OHM CORP | EL MONTE | CA | 91731 |
| 24046 | TRANSITRON ELECTRONIC CORP | WAKEFIELD | MA | 01880 |
| 24355 | ANALOG DEVICES INC | NORWOOD | MA | 02062 |
| 24546 | CORNING GLASS WORKS (BRADFORD) | BRADFORD | PA | 16701 |
| 25088 | SIEMENS CORP | ISELIN | NJ | 08830 |
| 27014 | NATIONAL SEMICONDUCTOR CORP | SANTA CLARA | CA | 95051 |
| 28480 | HEWLETT-PACKARD CO CORPORATE HQ | PALO ALTO | CA | 94304 |
| 3L585 | RCA CORP SOLID STATE DIV | SOMERVILLE | NJ | |
| 30983 | MEPCO/ELECTRA CORP | SAN DIEGO | CA | 92121 |
| 32559 | BIVAR INC | SANTA ANA | CA | 92705 |
| 32997 | BOURNS INC TRIMPOT PROD DIV | RIVERSIDE | CA | 92507 |
| 34371 | HARRIS SEMICON DIV HARRIS-INTERTYPE | MELBOURNE | FL | 32901 |
| 52648 | PLESSEY SEMICONDUCTORS | SANTA ANA | CA | 92705 |
| 52763 | STETTNER ELECTRONICS INC | CHATTANOOGA | TN | 13035 |
| 54294 | SHALLCROSS INC | SELMA | NC | 27576 |
| 56289 | SPRAGUE ELECTRIC CO | NORTH ADAMS | MA | 01247 |
| 72136 | ELECTRO MOTIVE CORP | FLORENCE | SC | 06226 |
| 72982 | ERIE TECHNOLOGICAL PRODUCTS INC | ERIE | PA | 16512 |
| 73138 | BECKMAN INSTRUMENTS INC HELIPOT DIV | FULLERTON | CA | 92634 |
| 74970 | JOHNSON E F CO | WASECA | MN | 56093 |
| 76042 | TRW INC PHILADELPHIA DIV | PHILADELPHIA | PA | 19108 |
| 75915 | LITTELFUSE INC | DES PLAINES | IL | 60016 |
| 91637 | DALE ELECTRONICS INC | COLUMBUS | NE | 68601 |



www.valuetronics.com

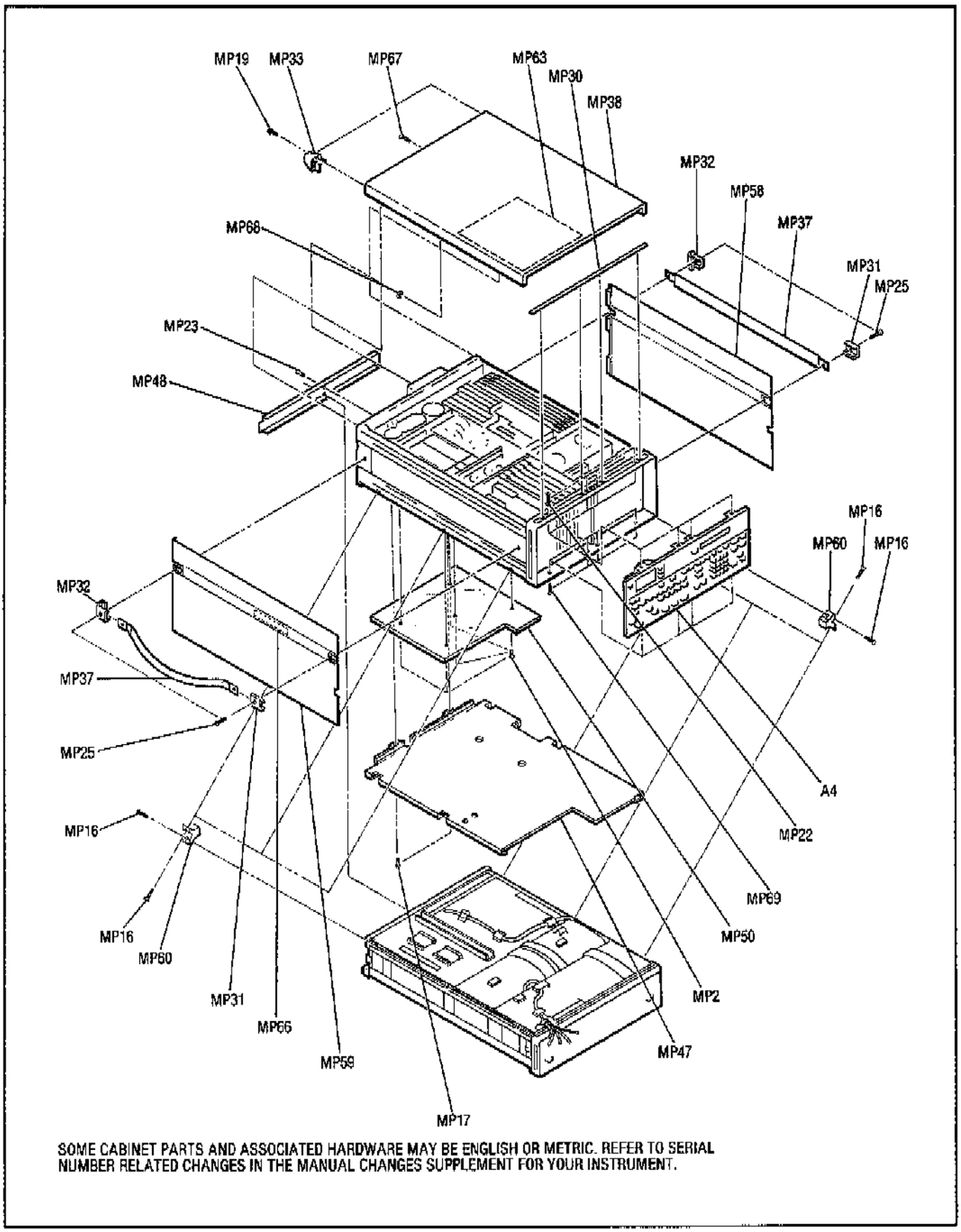


SOME CABINET PARTS AND ASSOCIATED HARDWARE MAY BE ENGLISH OR METRIC. REFER TO SERIAL NUMBER RELATED CHANGES IN THE MANUAL CHANGES SUPPLEMENT FOR YOUR INSTRUMENT.

**Figure 6-1. HP 8673C/D Parts Identification**



www.valuetronics.com

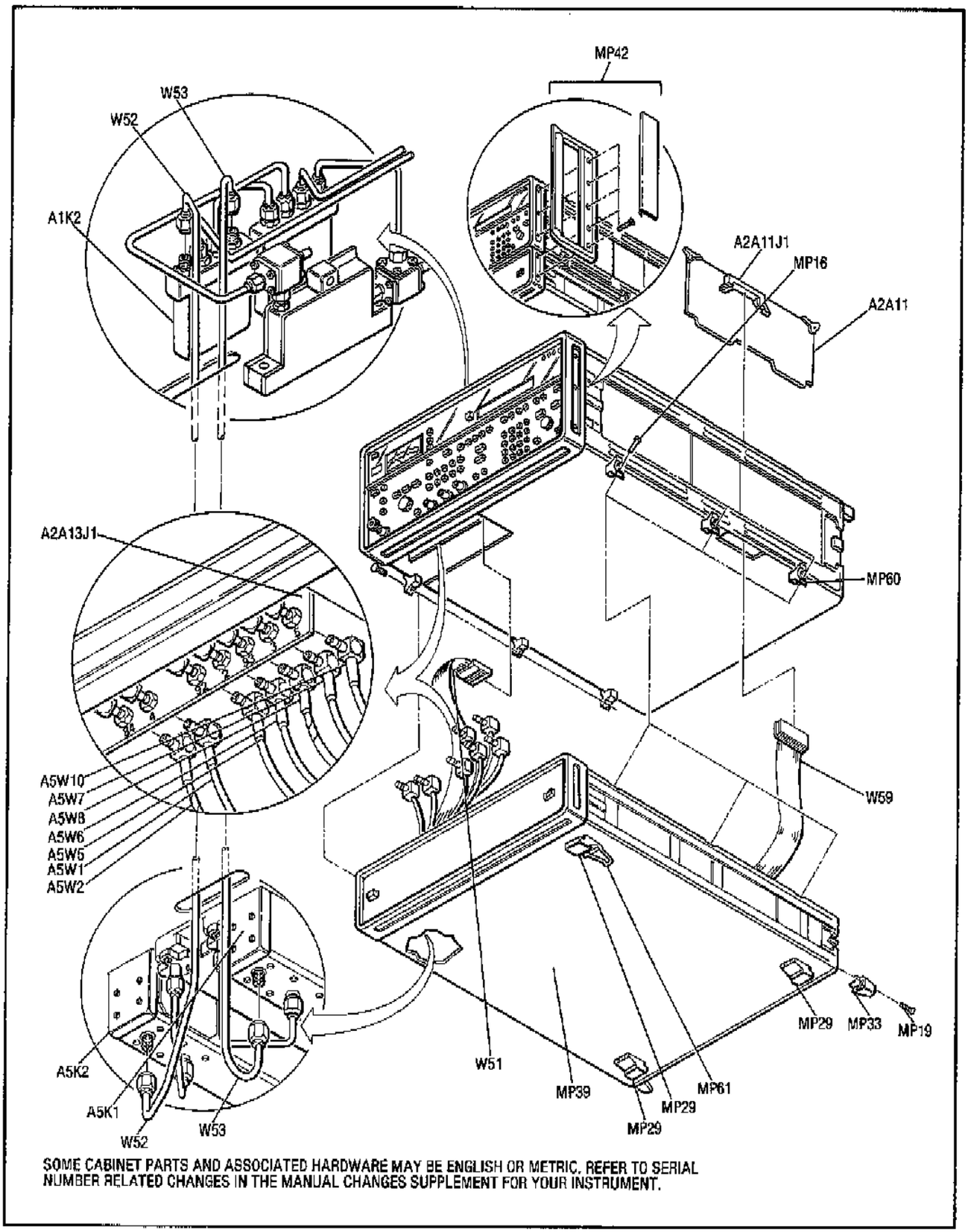


**Figure 6-2. Interconnecting Parts Identification**



www.valuetronics.com

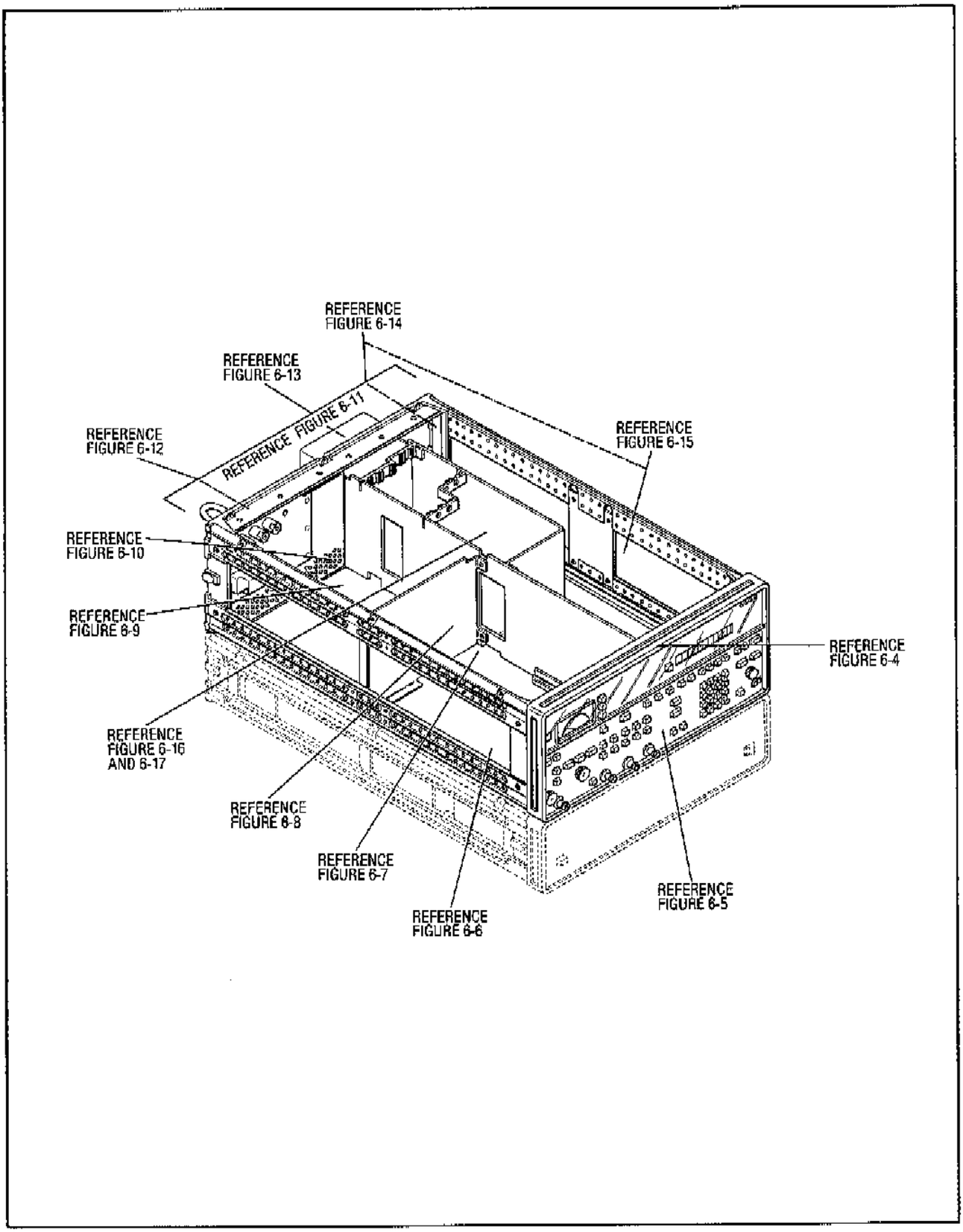


**Figure 6-3. Upper Unit Overall Parts Identification**



www.valuetronics.com

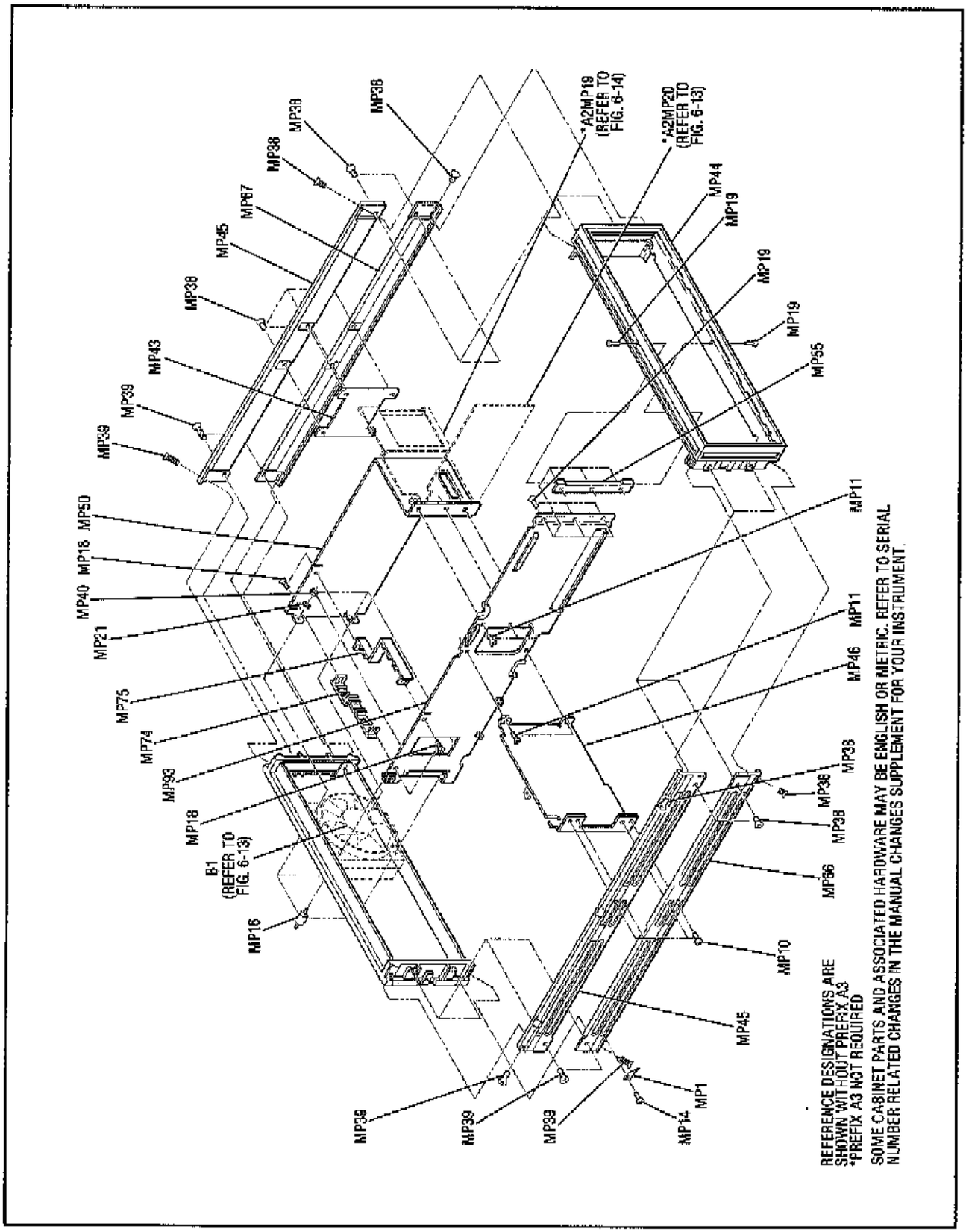


**Figure 6-4. Upper Unit Cabinet Parts Identification**



www.valuetronics.com

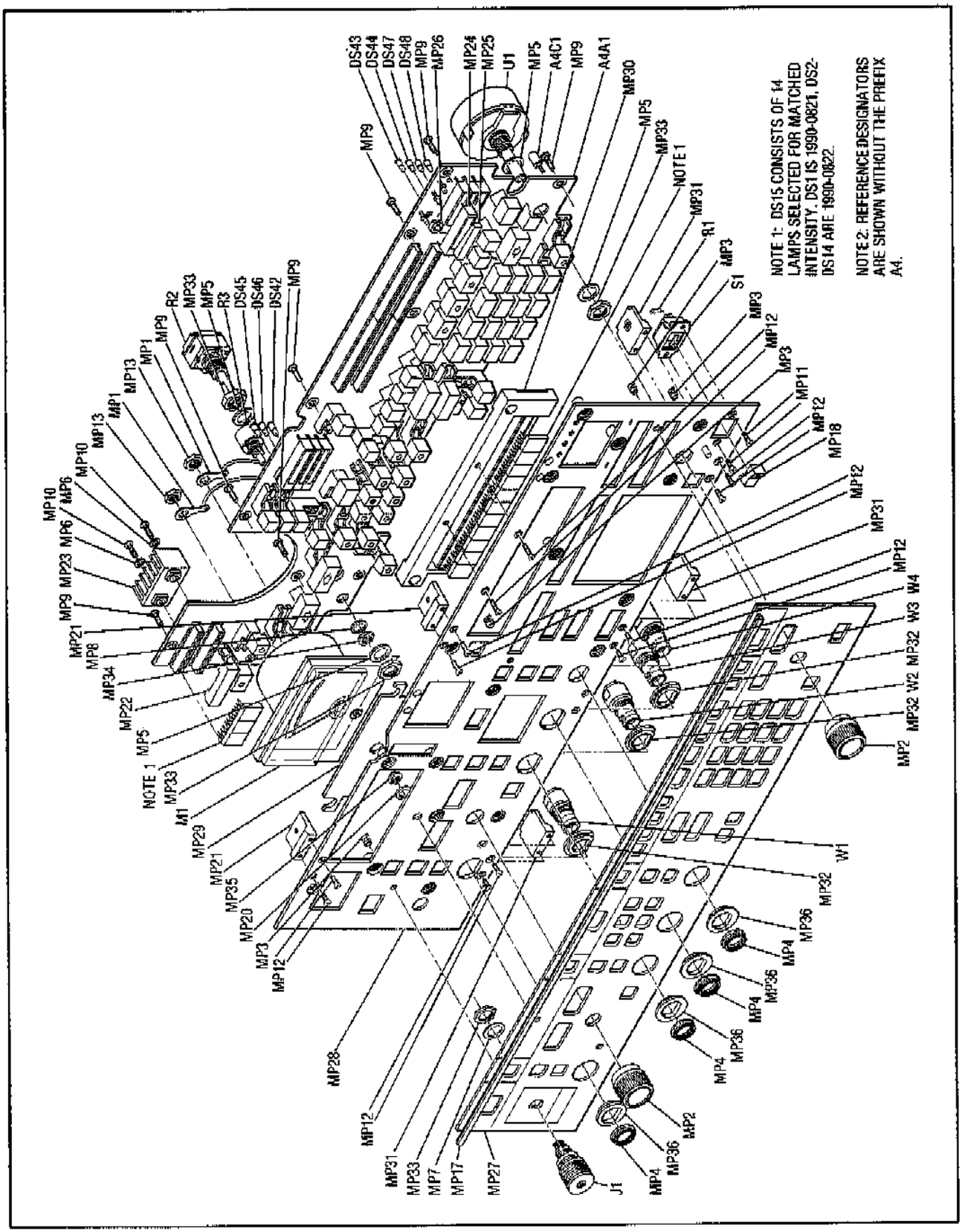


Figure 6-5. Upper Unit Front Panel Parts Identification



www.valuetronics.com

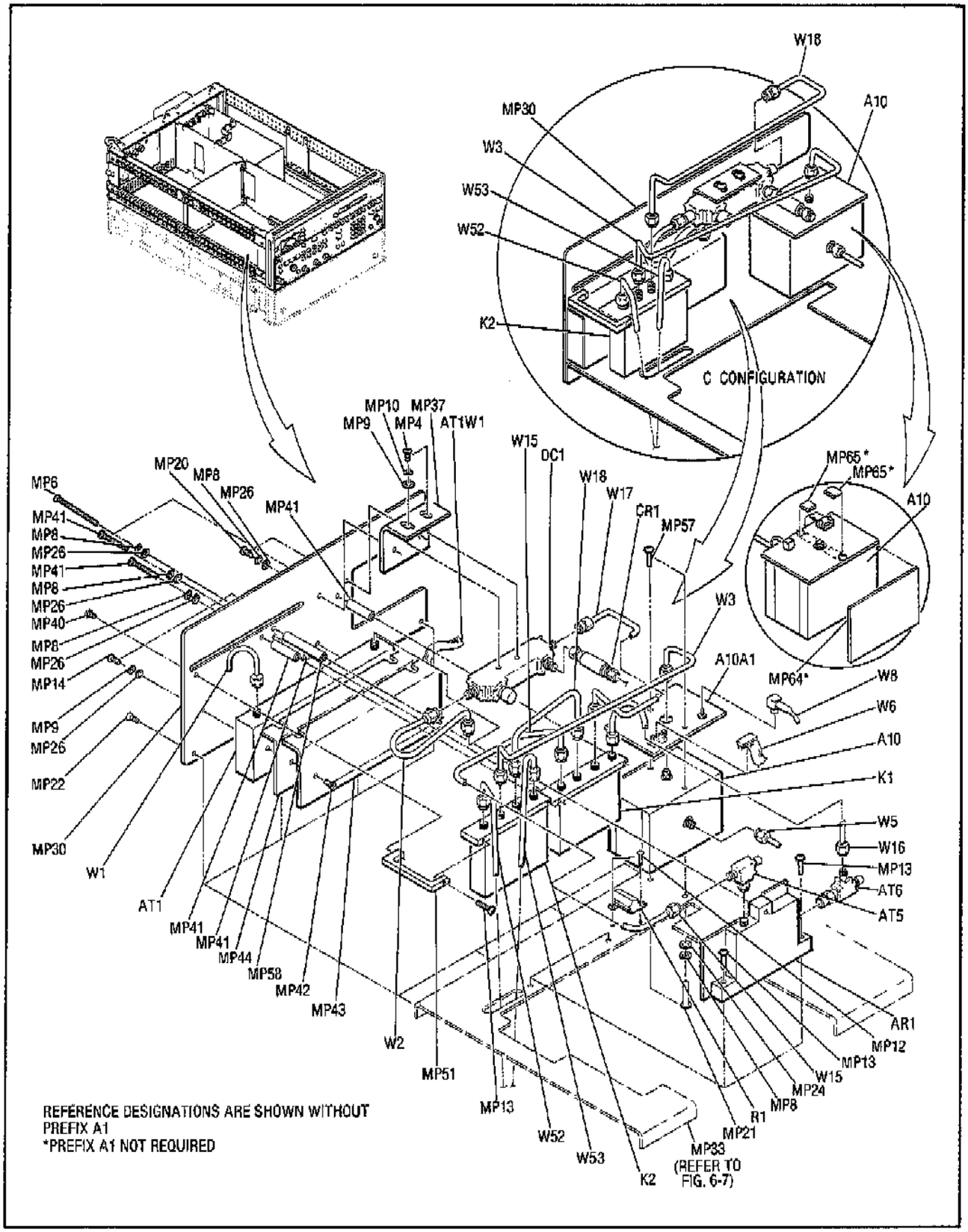


**Figure 6-6. A1 Microwave Circuits Parts Identification**



www.valuetronics.com

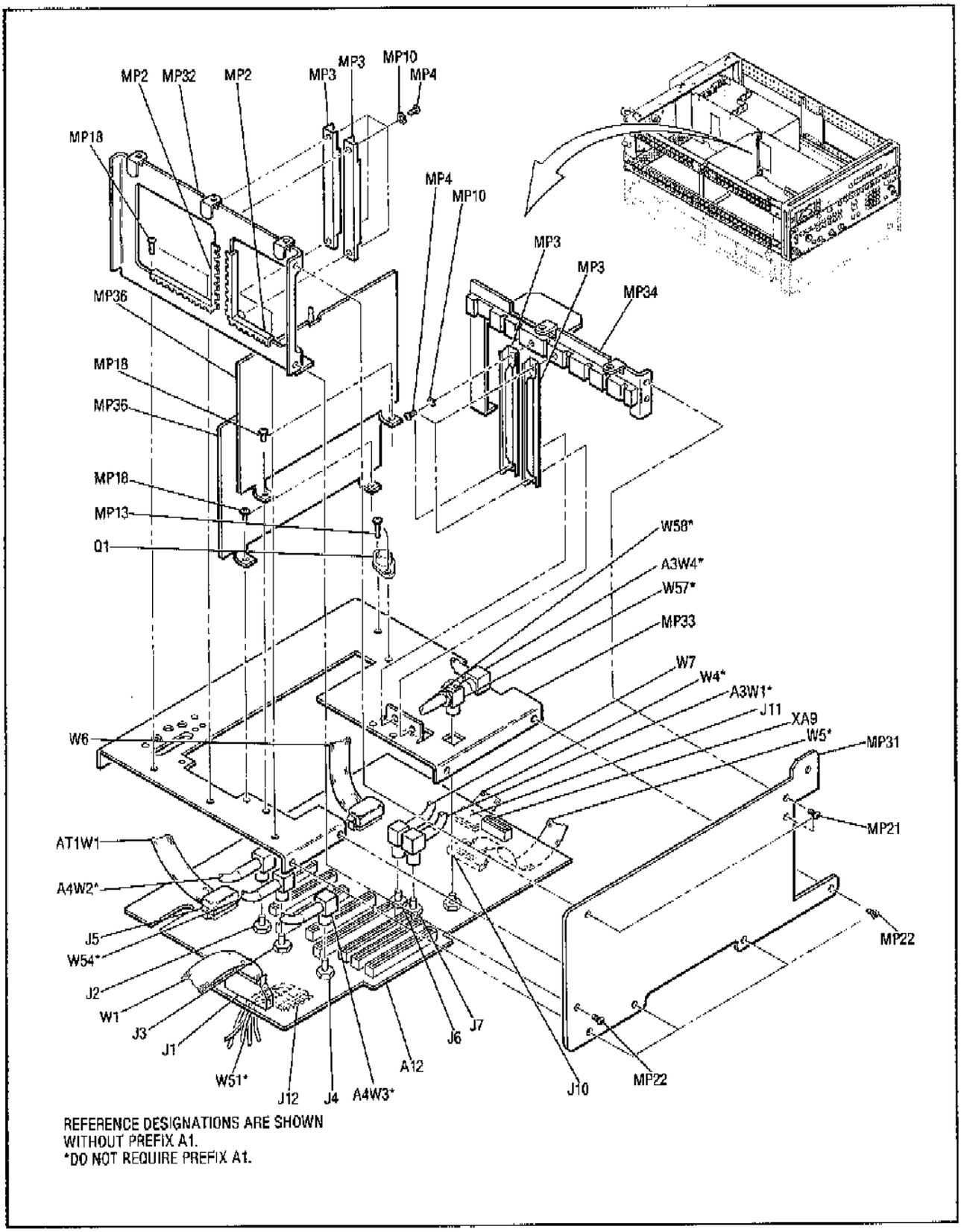


**Figure 6-7. A1 Card Cage Parts Identification**



www.valuetronics.com

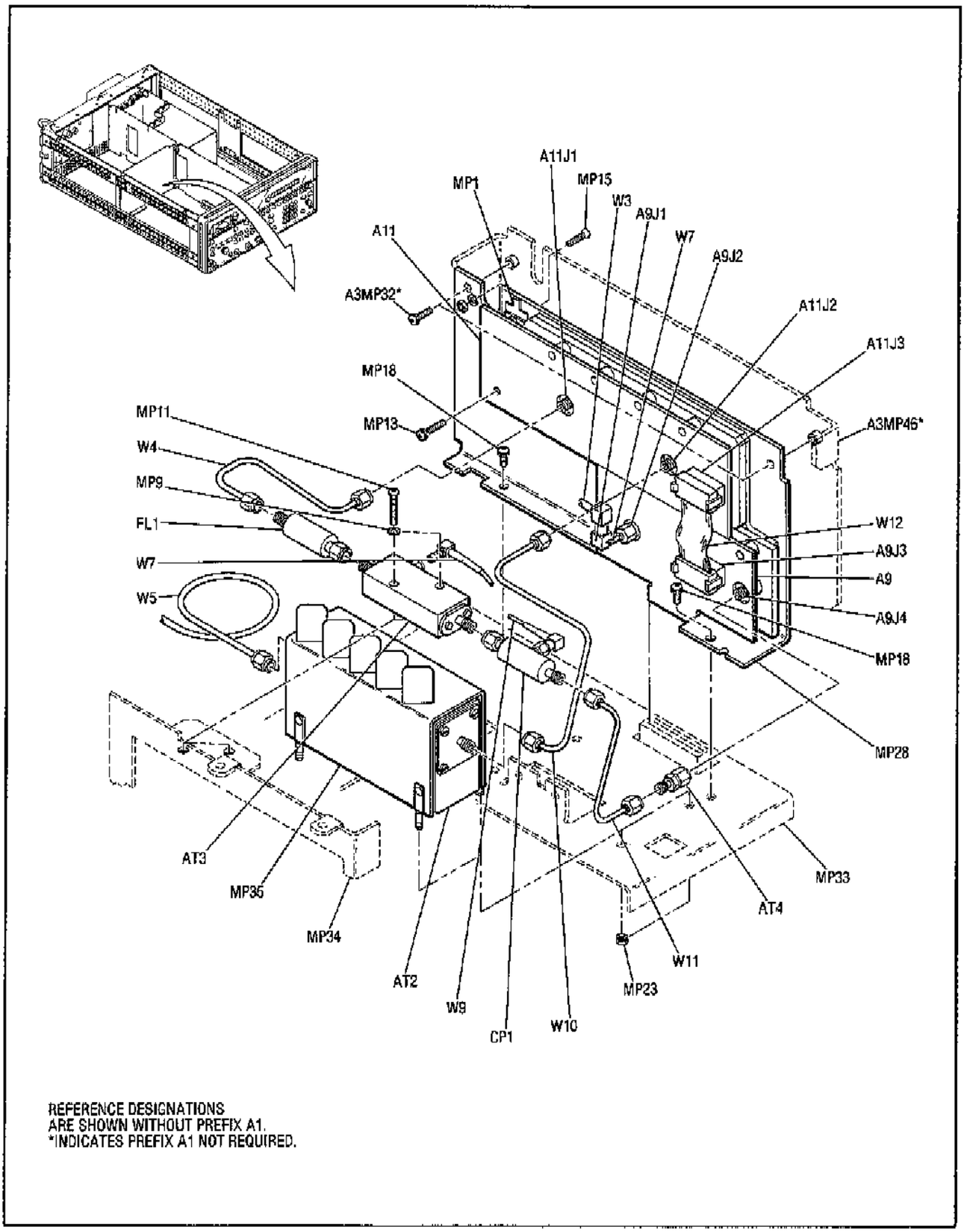


**Figure 6-8. A1 Pulse Circuits Parts Identification**



www.valuetronics.com

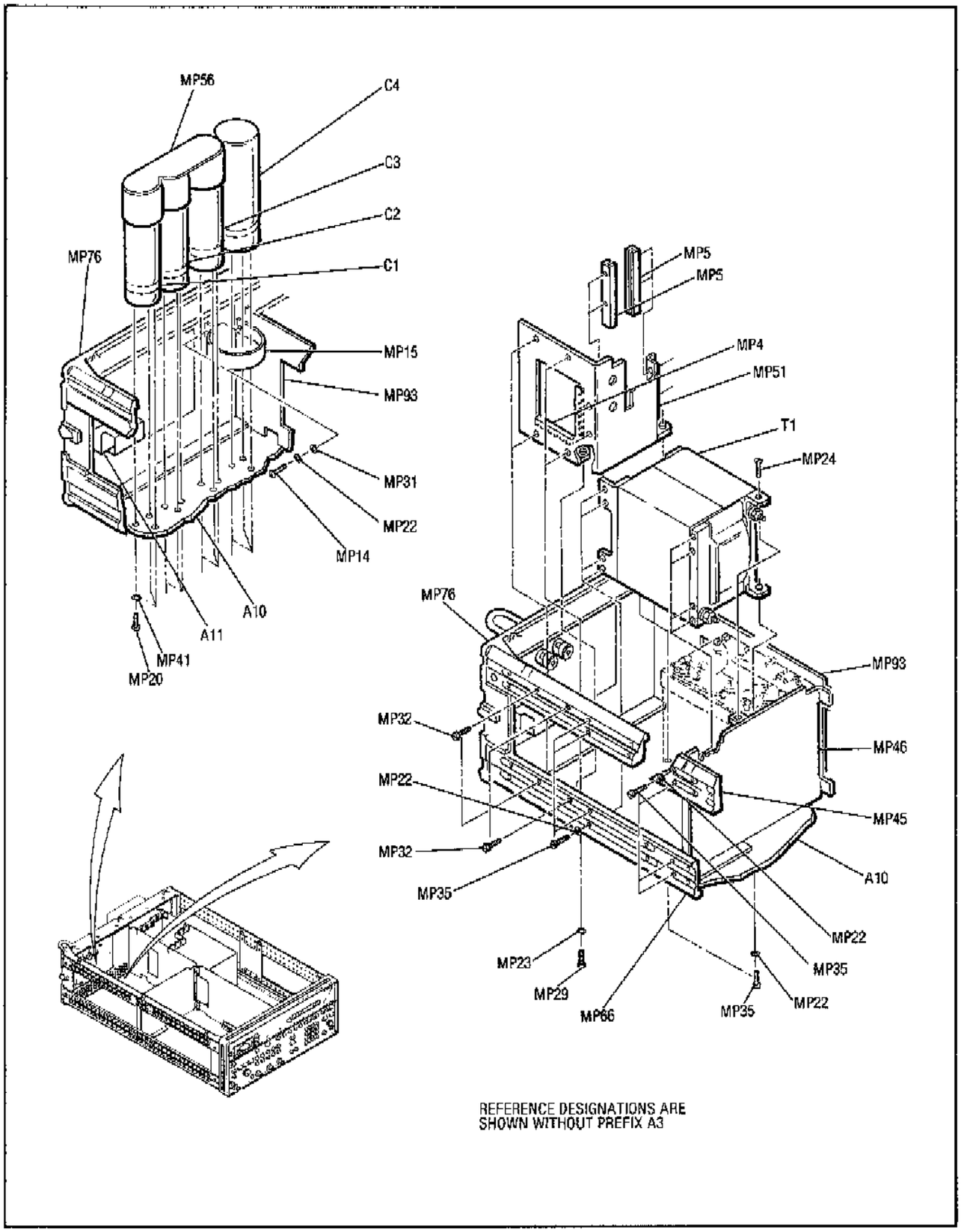


**Figure 6-9. A3 Power Supply and RF Source Parts Identification**



www.valuetronics.com

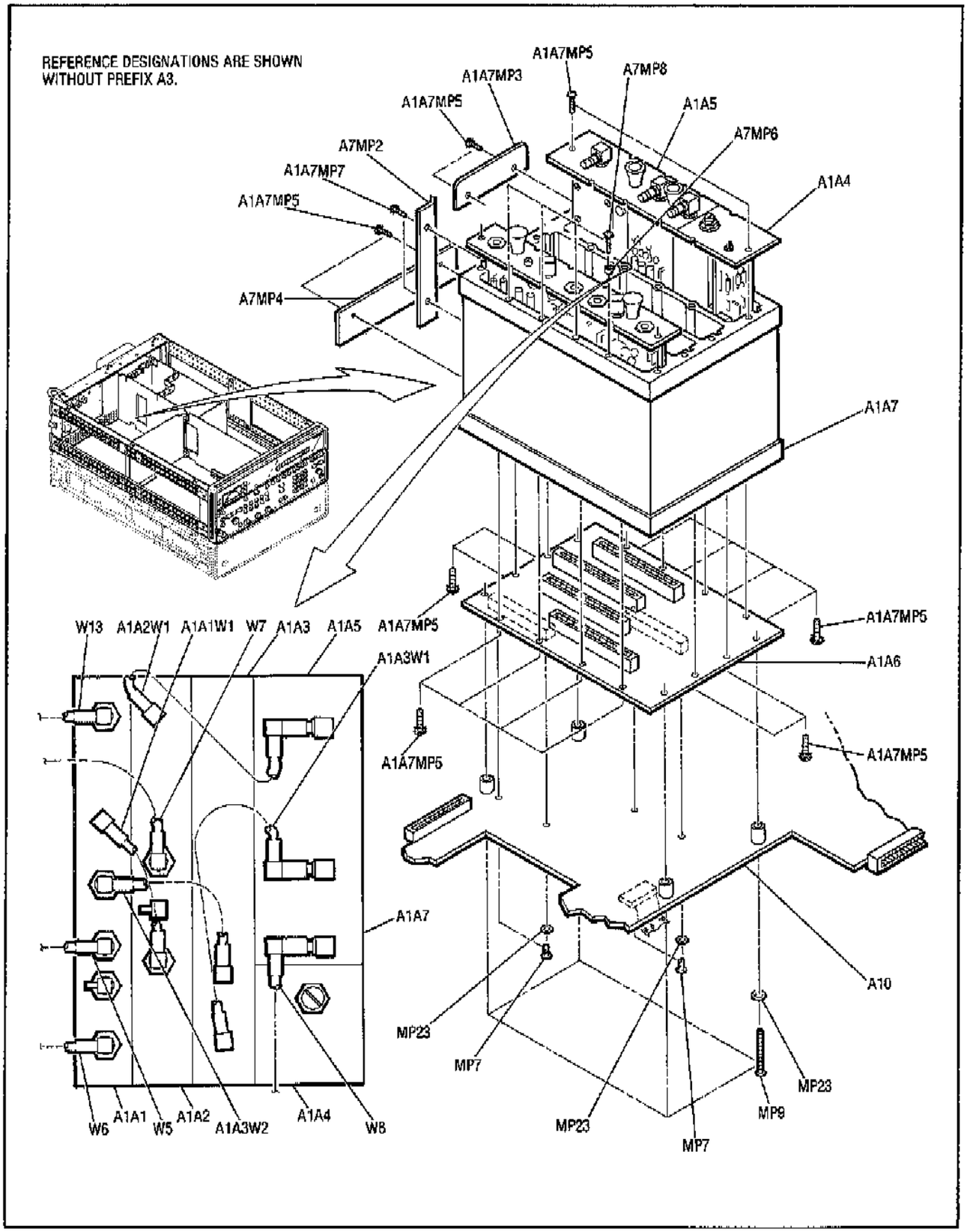


Figure 6-10. A3 RF Source Parts Identification



www.valuetronics.com

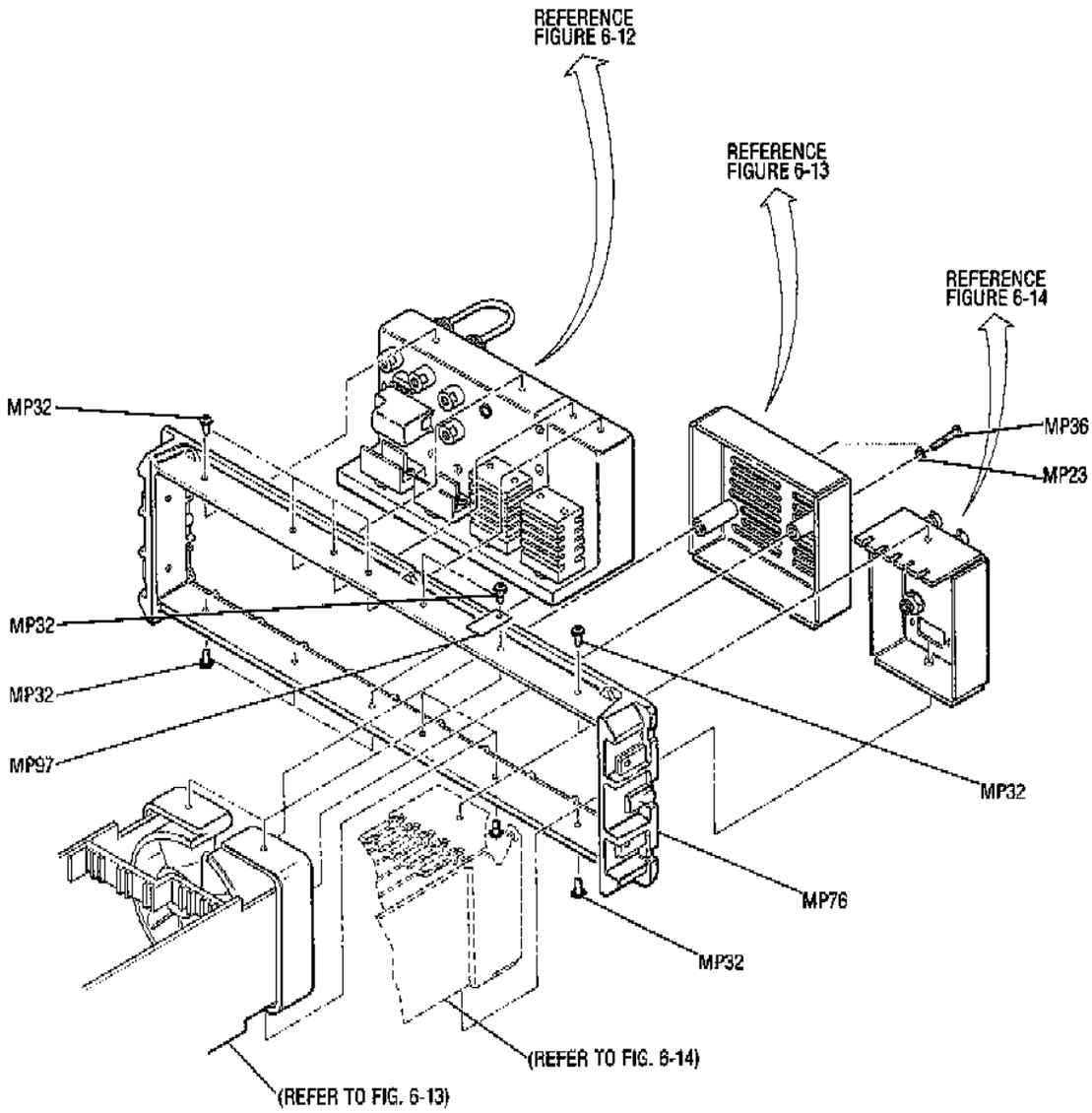


**Figure 6-11. A3 Rear Panel Parts Identification**



www.valuetronics.com

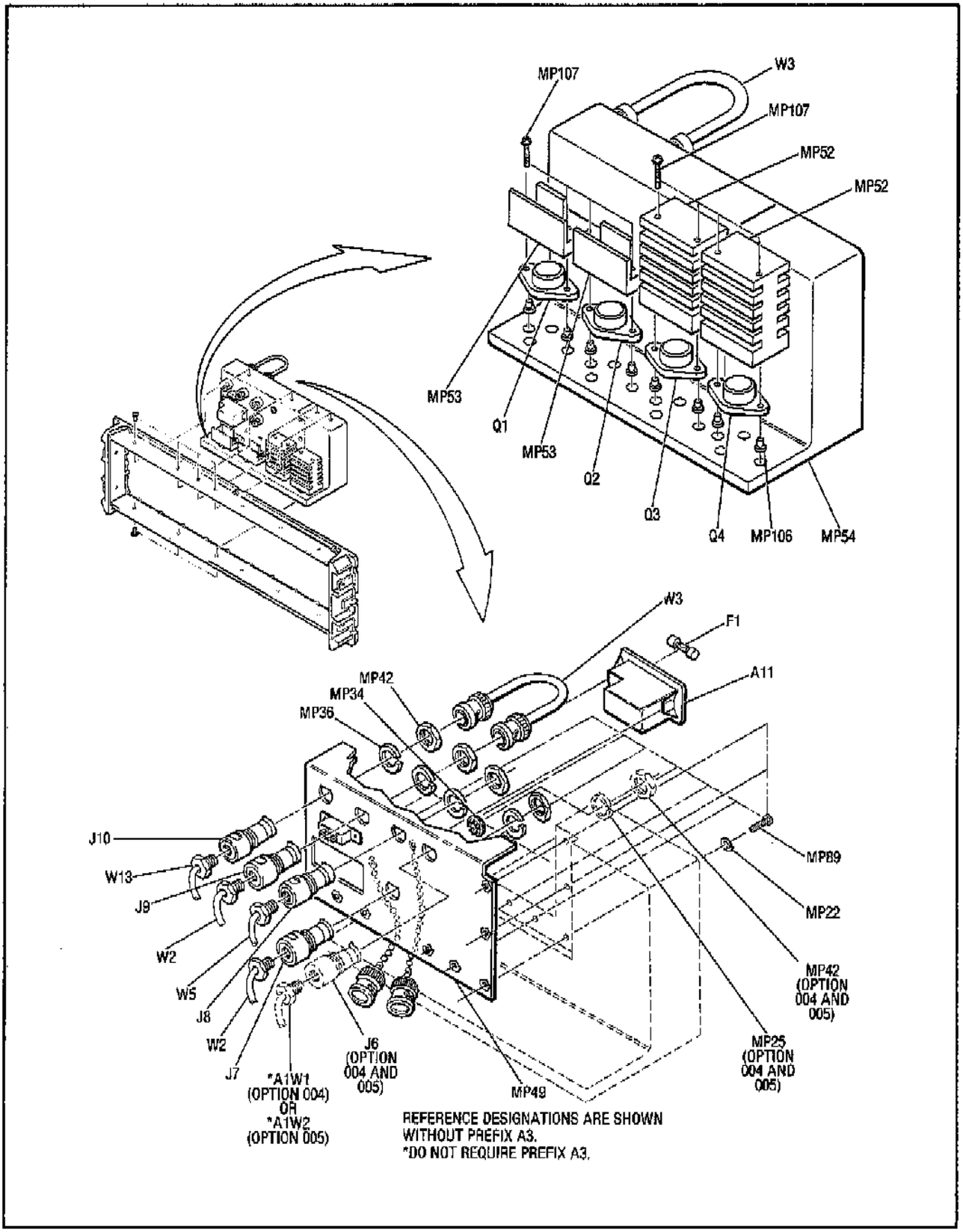


**Figure 6-12. A3 Power Supply and Rear Panel Parts Identification**



www.valuetronics.com

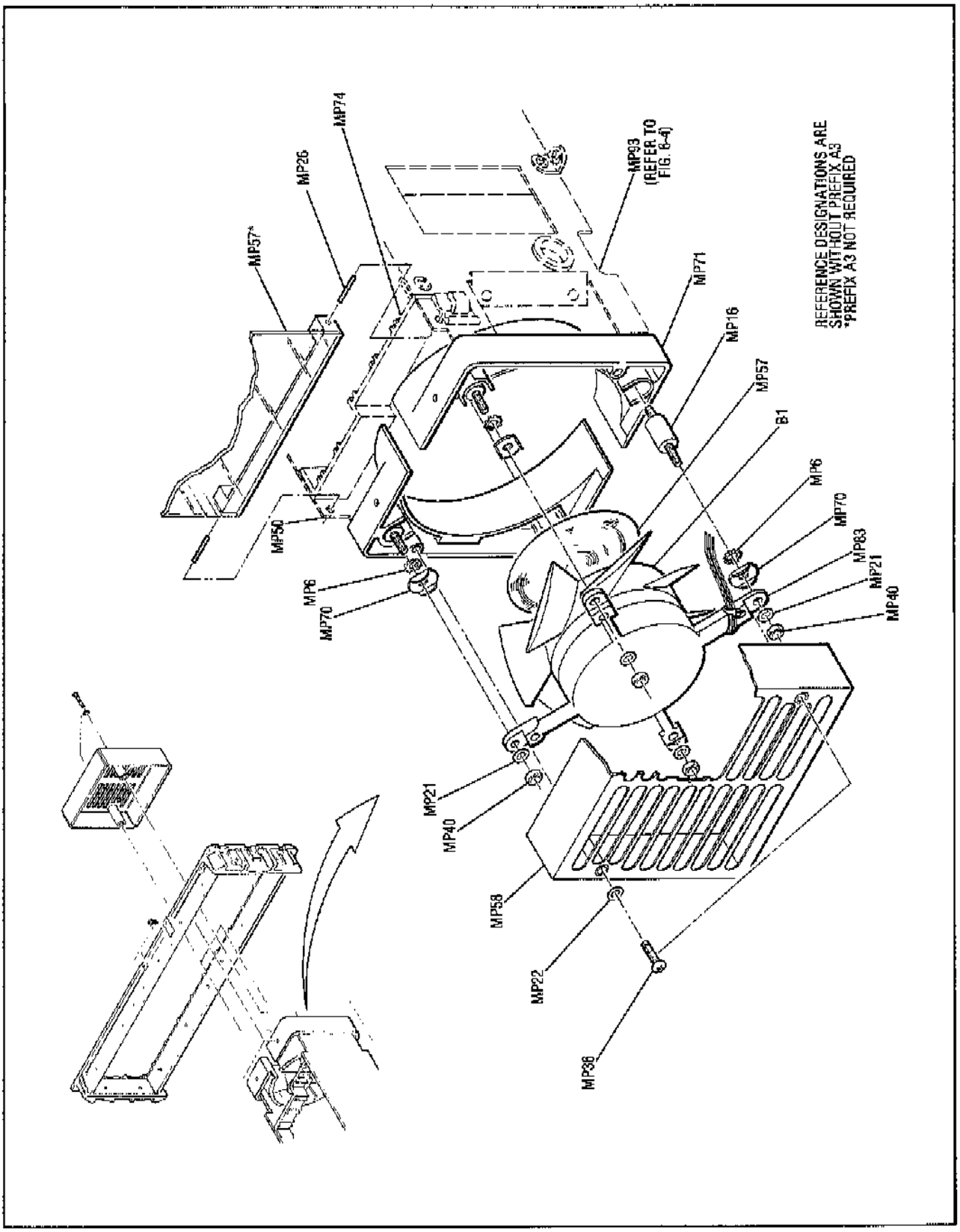


**Figure 6-13. A3 Fan Assembly Parts Identification**



www.valuetronics.com

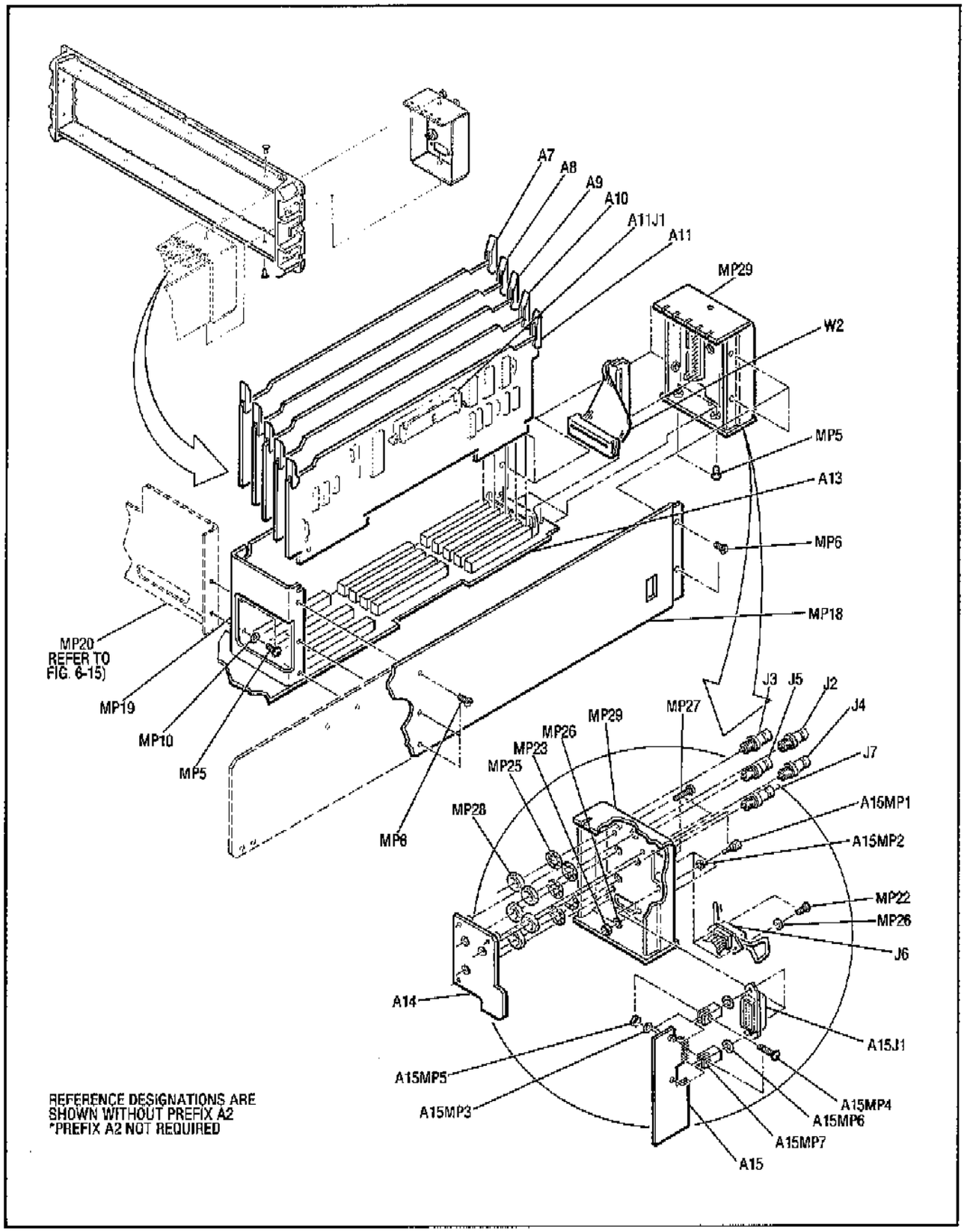


**Figure 6-14. P/O A2 Controller and Rear Panel Parts Identification**



www.valuetronics.com

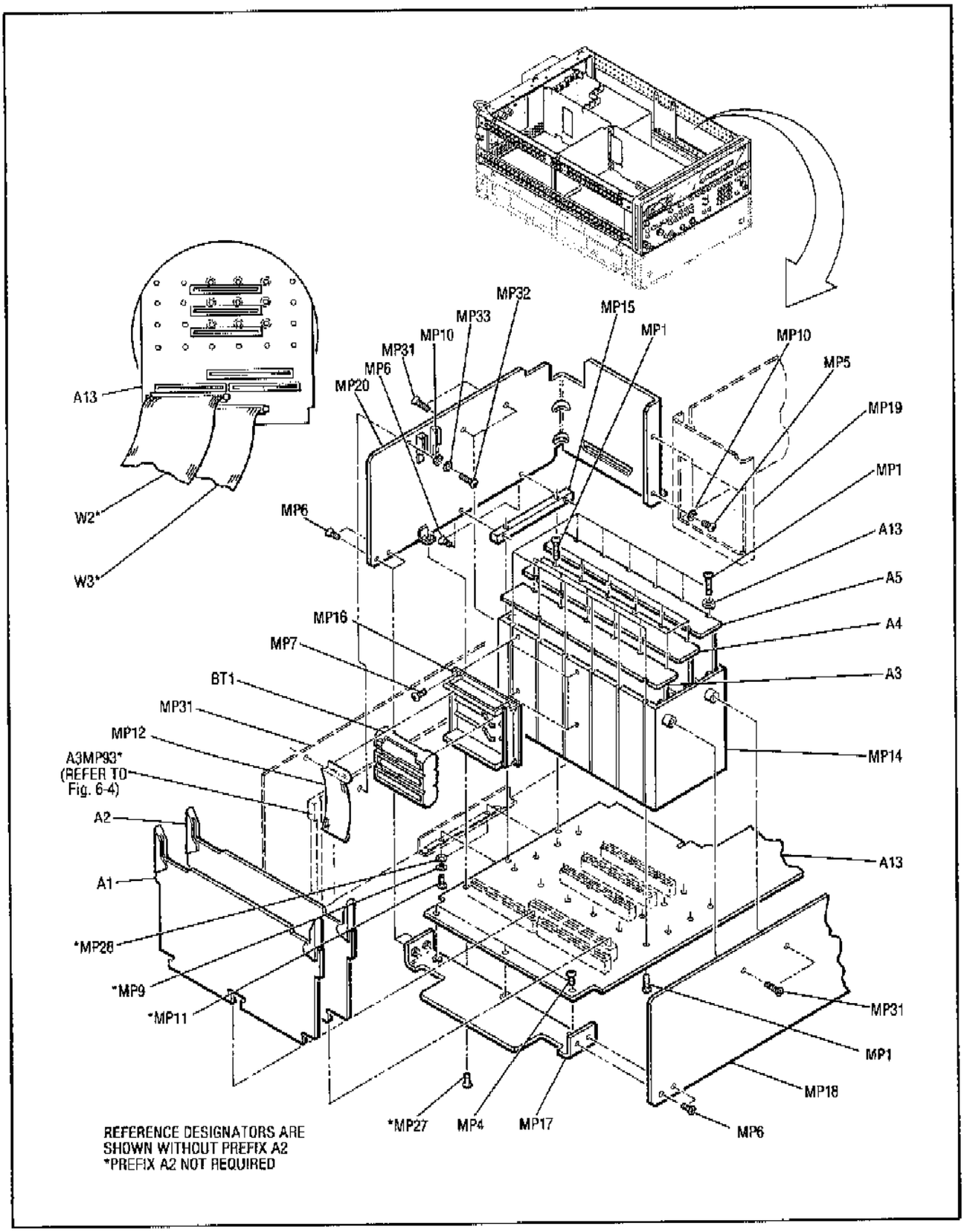


**Figure 6-15. P/O A2 Controller Assembly Parts Identification**



www.valuetronics.com

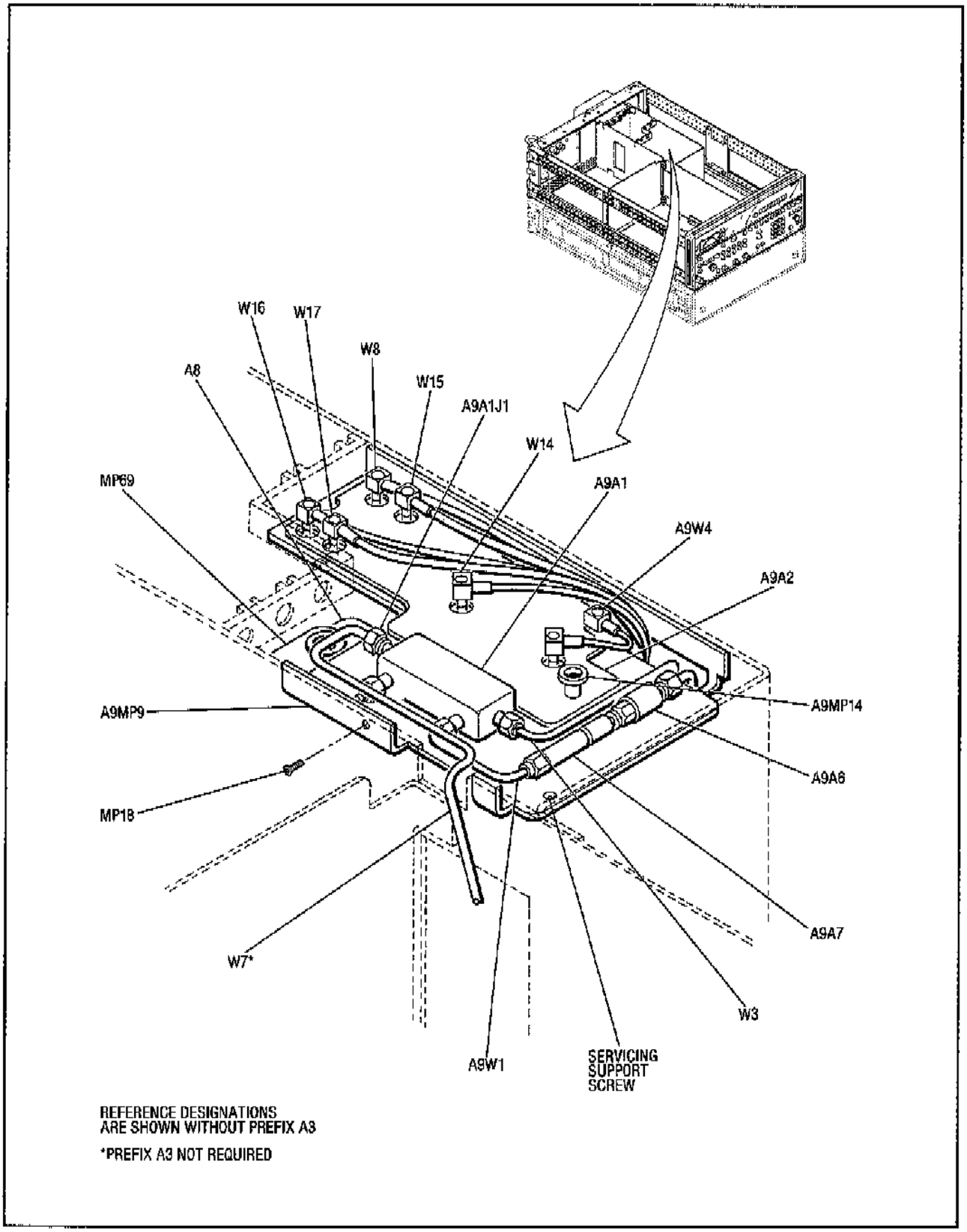


**Figure 6-16. YTO Loop Parts Identification**



www.valuetronics.com

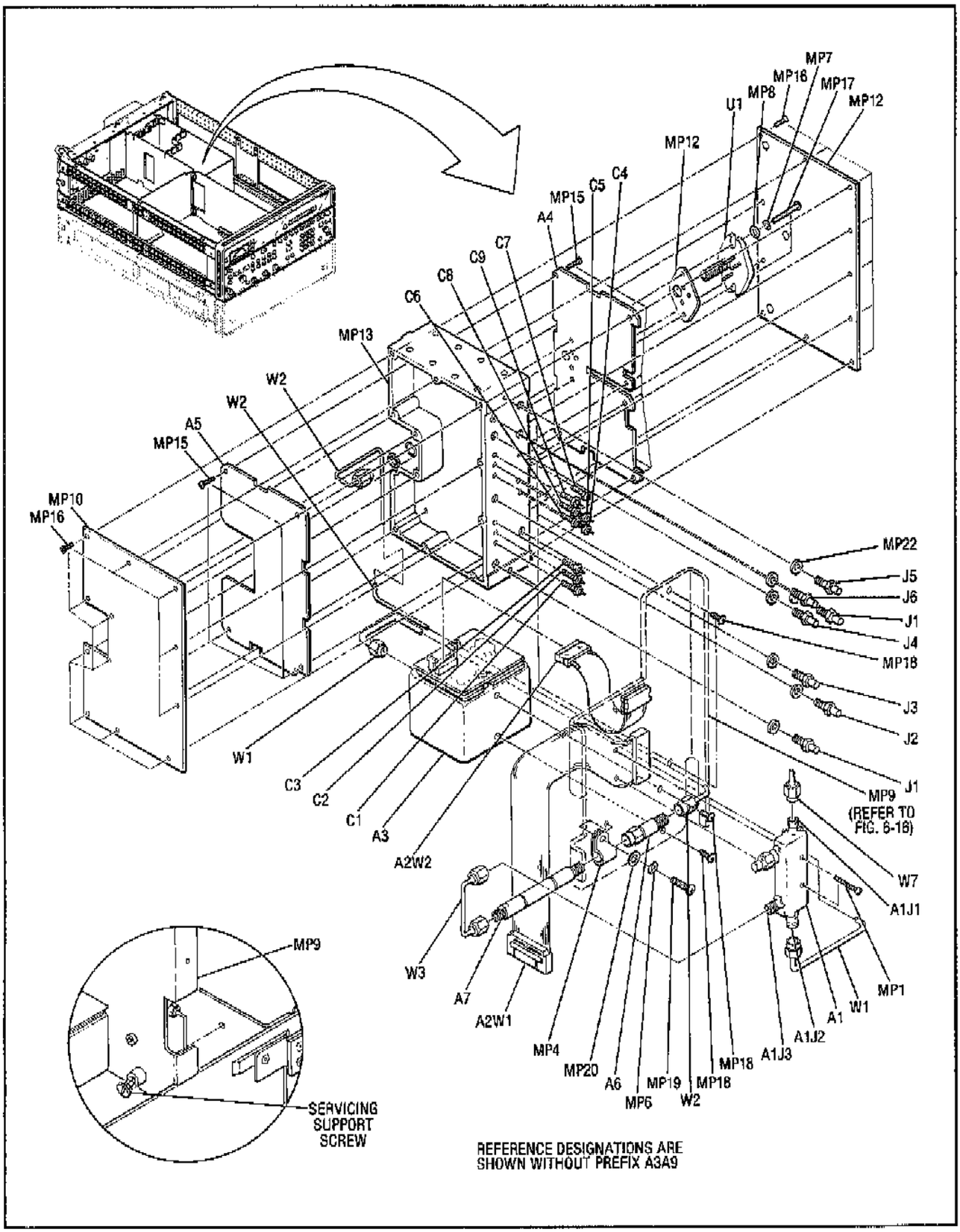


**Figure 6-17. YTO and Reference Oscillator Parts Identification**



www.valuetronics.com

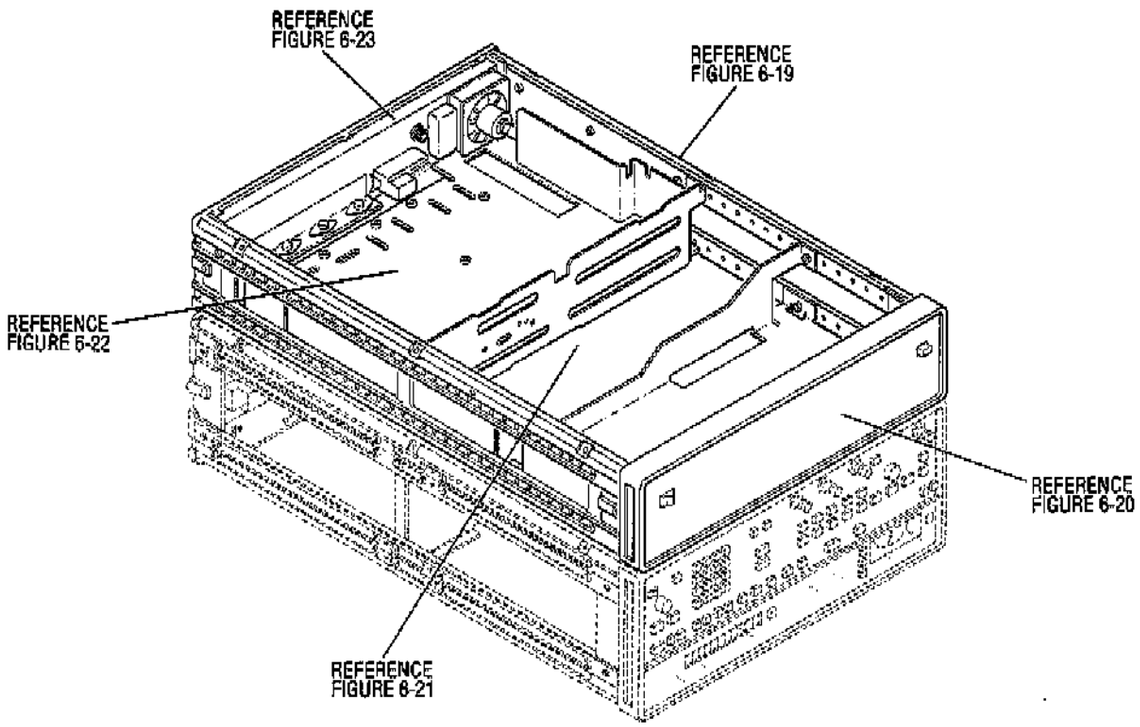


Figure 6-18. Lower Unit Overall Parts Identification



www.valuetronics.com

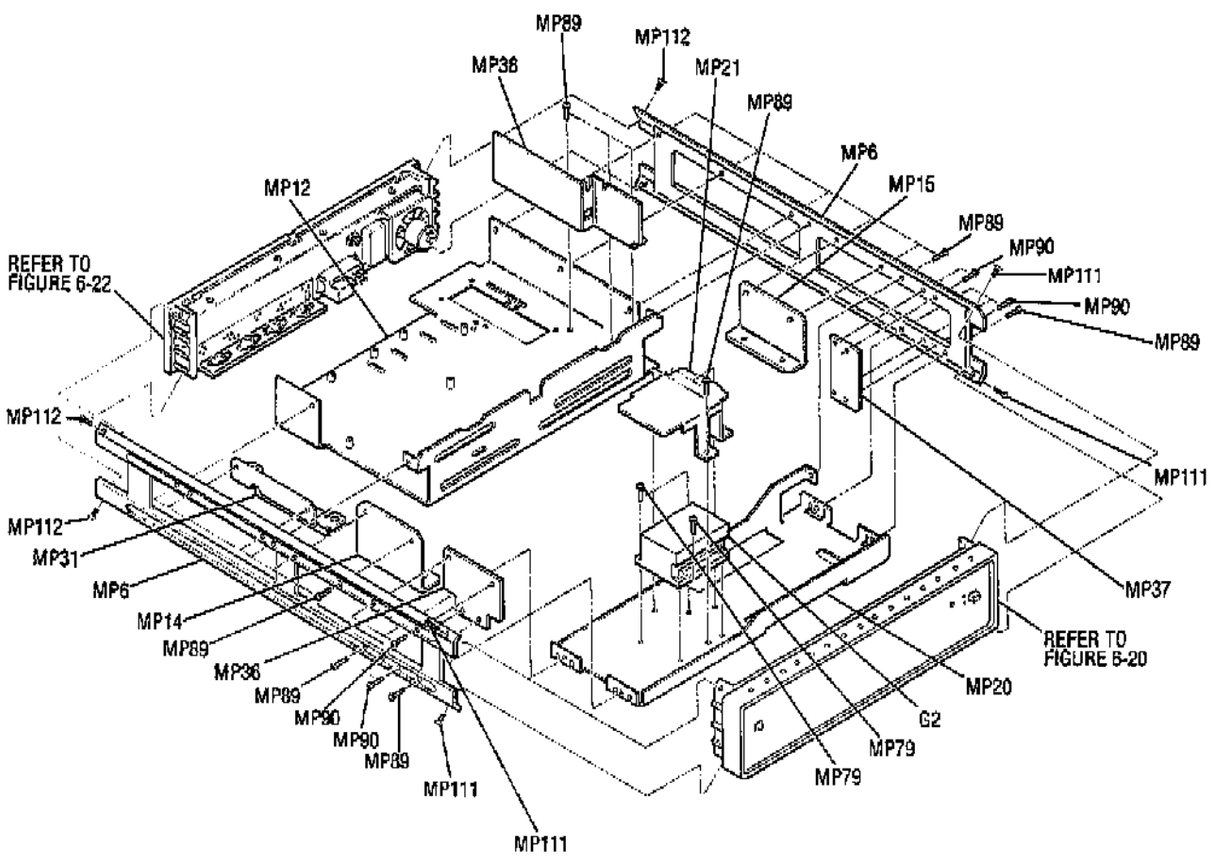


REFERENCE DESIGNATIONS
ARE SHOWN WITHOUT PREFIX A5

SOME CABINET PARTS AND ASSOCIATED HARDWARE MAY BE ENGLISH OR METRIC. REFER TO SERIAL NUMBER RELATED CHANGES IN THE MANUAL CHANGES SUPPLEMENT FOR YOUR INSTRUMENT.

**Figure 6-19. Lower Unit (A5) Cabinet Parts Identification**



www.valuetronics.com

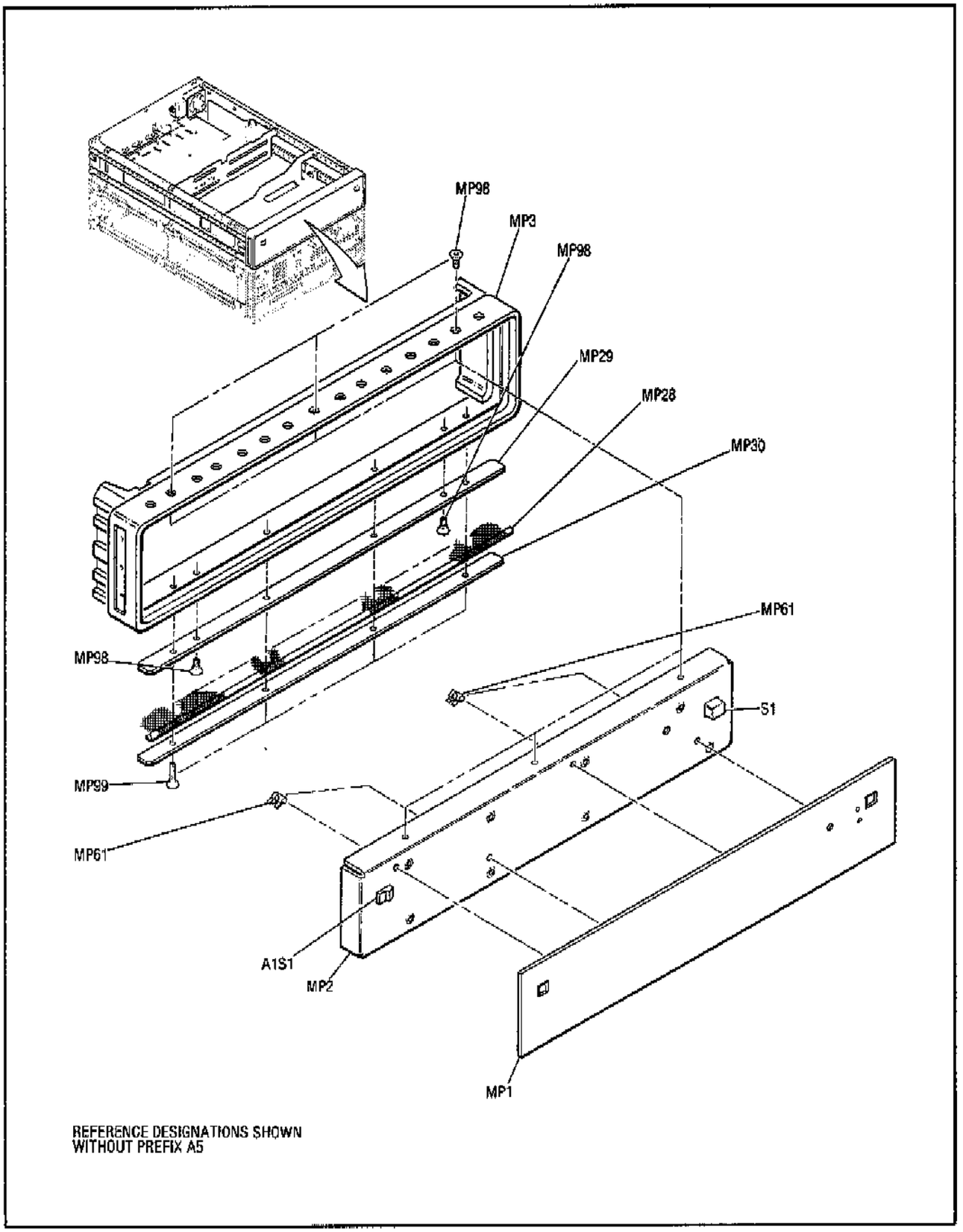


**Figure 6-20. Lower Unit Front Panel Parts Identification**



www.valuetronics.com

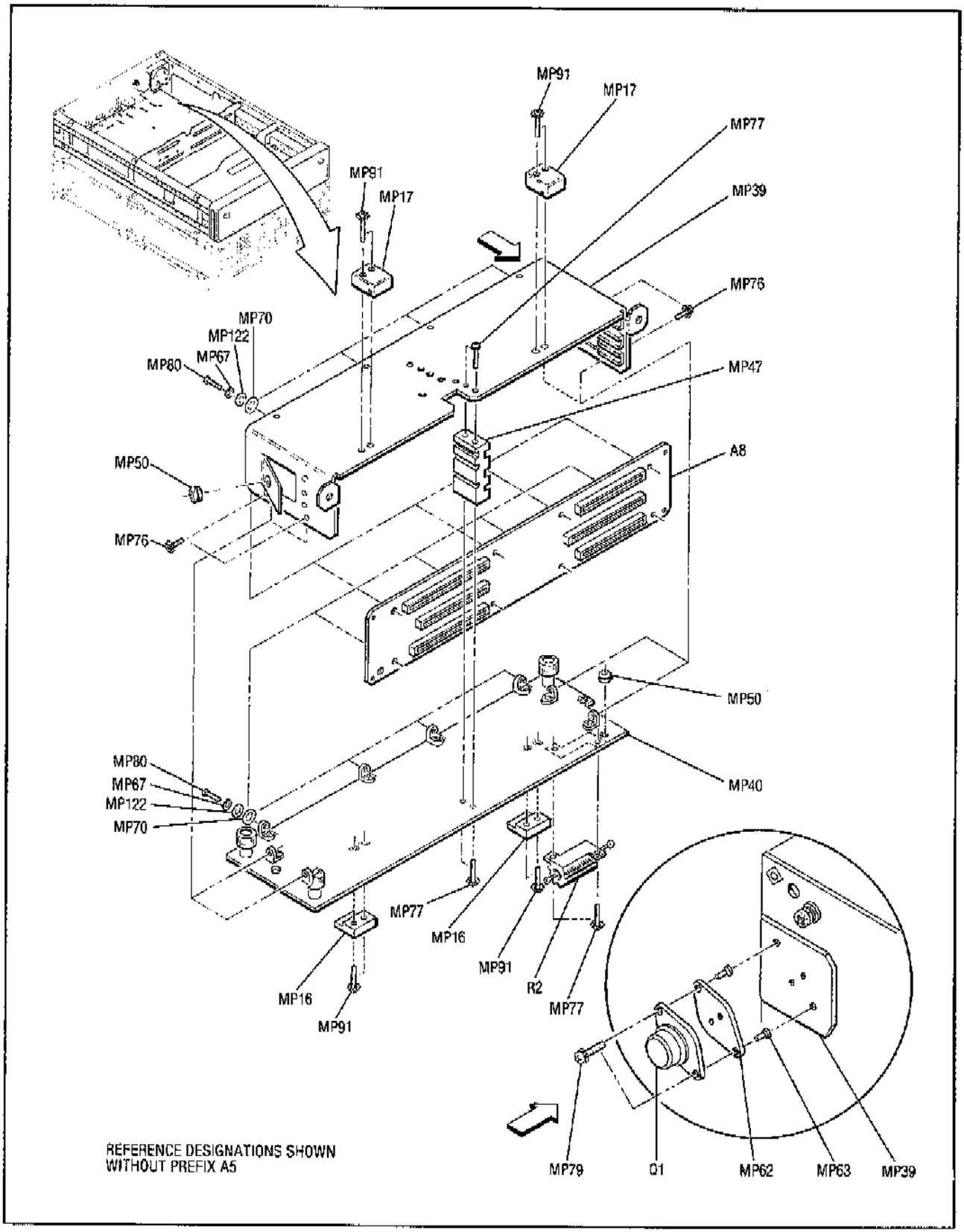


**Figure 6-21. Lower Unit Card Cage Parts Identification**



www.valuetronics.com

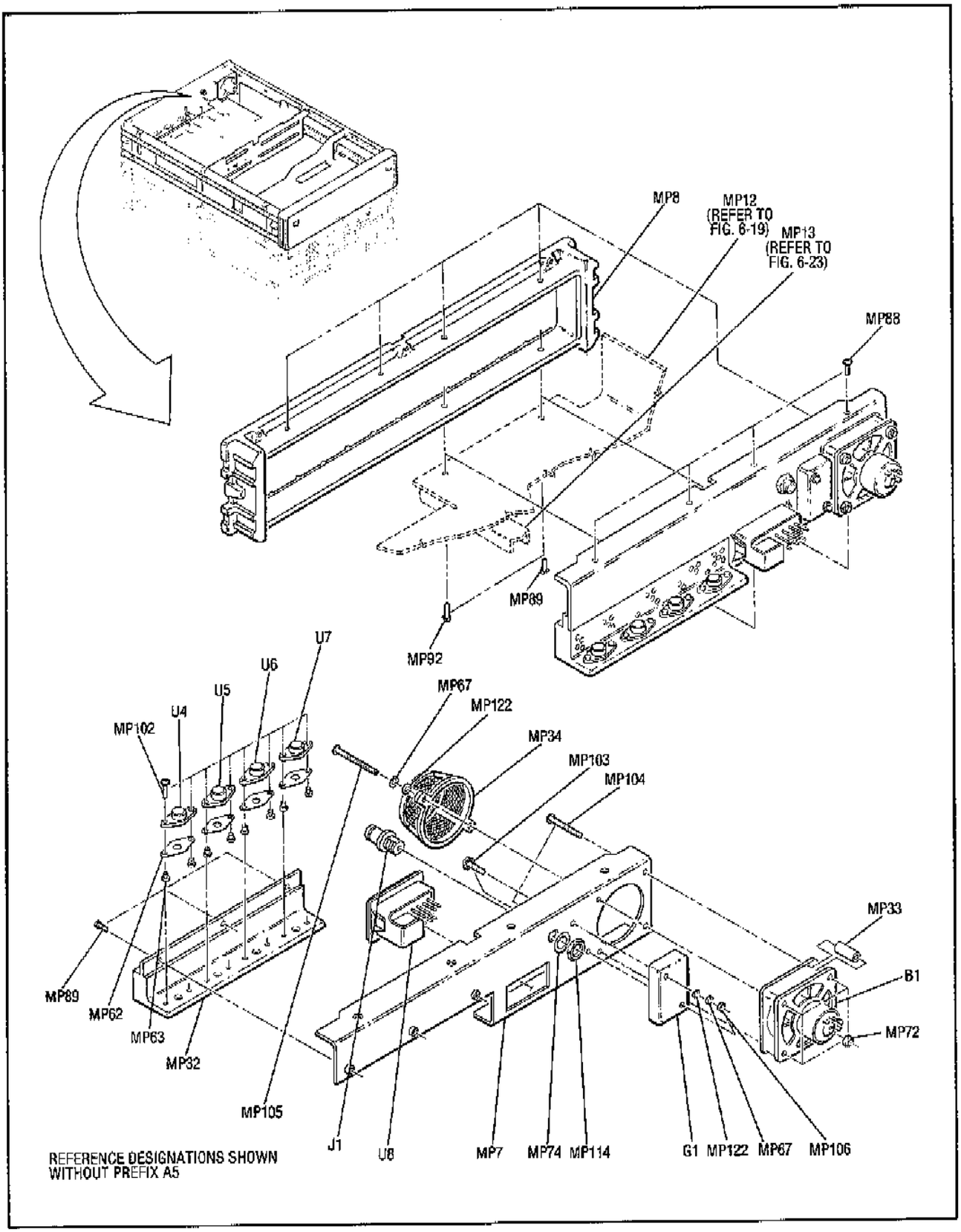


**Figure 6-22. Lower Unit Rear Panel Parts Identification**



www.valuetronics.com

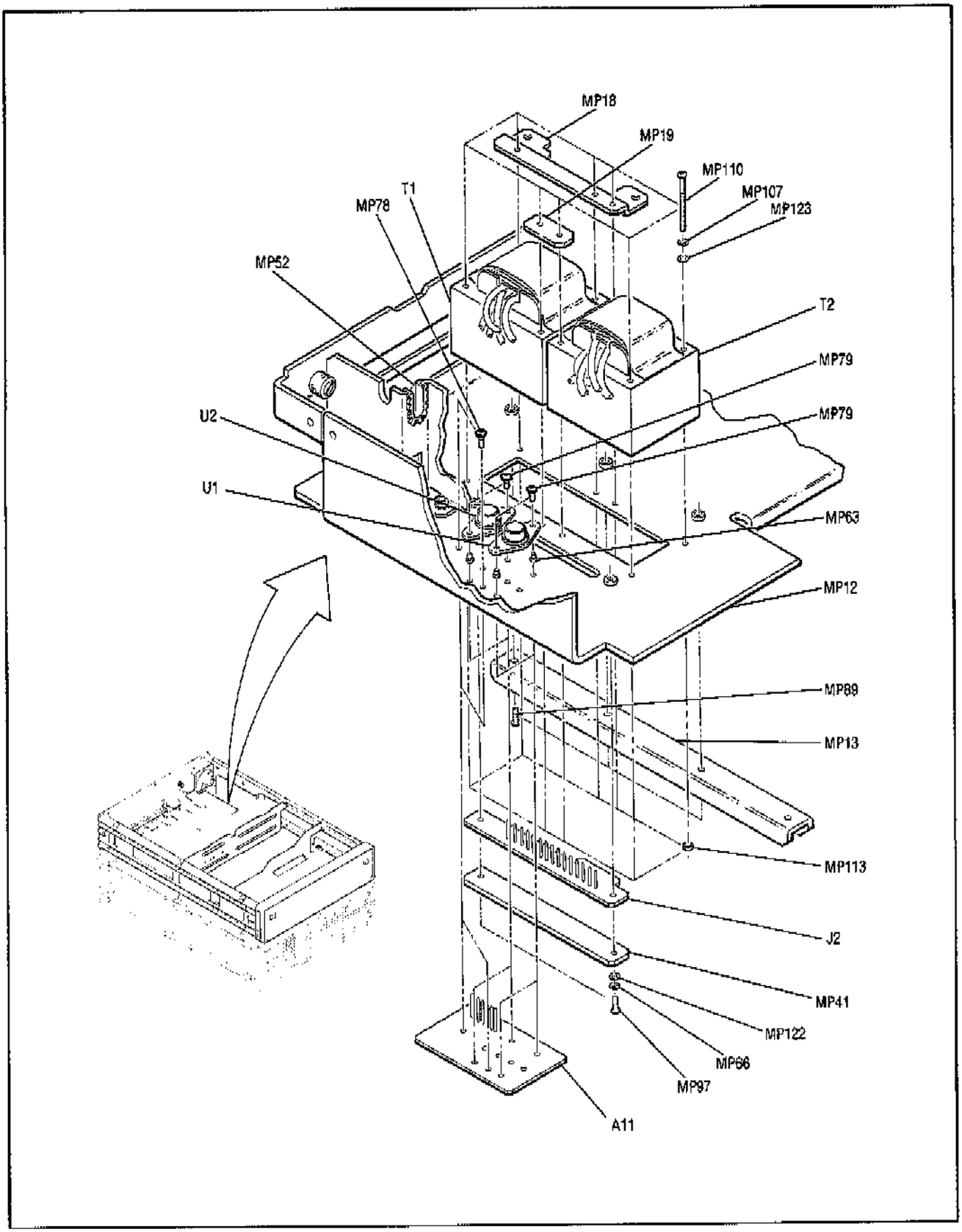


**Figure 6-23. Lower Unit Power Transformer and Regulator Parts Identification**



www.valuetronics.com

# SECTION VII
# MANUAL CHANGES

## 7-1. INTRODUCTION

This section normally contains information for adapting the manual to older instruments. However, no manual changes existed when this manual was printed.

If your instrument's serial number prefix is not listed on the title page of this manual, it may be documented in a separate MANUAL CHANGES supplement. For more information about serial number prefixes, refer to INSTRUMENTS COVERED BY THIS MANUAL in Section I.

## 7-2. INSTRUMENT IMPROVEMENT MODIFICATIONS

Hewlett-Packard has developed some instrument modifications that can improve the performance or reliability of older Signal Generators. In some cases, modifications were developed because original components were no longer available. The modifications are described in the following paragraphs and are keyed to Signal Generators by serial number prefix.

## 7-3. Improved Key Code Debouncing (instruments with serial number prefix 2332A)

The addition of a single capacitor can improve the effectiveness of the internal keycode debounce circuitry. On some units, the debounce circuitry is not sufficent to fully debounce the front panel switches. Pressing a front panel key once may result in multiple entries. Adding the capacitor reduces the ringing on the A2A2 Key Code assembly, "KDN-L" signal. This prevents undesired, multiple entries.

**Procedure:**

1. Disconnect the instrument from the Mains power by unplugging both power cables.
2. Remove the top cover of the instrument.
3. Remove the A2A2 Key Code assembly from the A2 Controller.
4. Ensure that the jumper is in the W2 position. Remove solder from the upper feedthru hole for jumper W1. This feedthru hole also connects to the W2 feedthru hole.
5. Desolder the upper end of resistor R5, which is connected to the +5V power supply, and remove one end of the resistor from the board.
6. Install the test point, HP Part Number 1251-0600, in the feedthru hole where R5 was removed from. Wrap the desoldered end of R5 to the test point and resolder resistor lead and test point.
7. Install a 0.1 $\mu$F, 50 VDC capacitor, HP Part Number 0160-0576, by soldering one end to the test point and the other in the feedthru hole, W1.
8. The capacitor should now be installed between U14-14 and the +5V power supply.
9. Reinstall A2A2 board assembly and instrument top cover.

## 7-4. Firmware Update Kit (instruments with serial number prefix 2452A and below)

A Firmware Update, HP part number 08673-60127, is available as a kit for the HP 8673C/D Synthesized Signal Generator. The new firmware will fix an AUTO PEAK bug (above 16 GHz, 8673D only), stop level meter drift with RF off above 2 GHz, and will allow the HP 8673C/D to be used as a digital sweep source for the HP 8510A Network Analyzer and HP 8756A Scalar Network Analyzer.

To find out which firmware version is installed in an HP 8673B/D, press "RCL" and then ".". The four digit number displayed on the "FREQUENCY MHz" display is the date code for the firmware currently in use. If the number is less than 2442, the firmware should be updated.

The update consists of replacing three ROMs on the A2A11 ROM/Converter Board. Follow all precautions for handling static sensitive devices when performing the replacement and be sure that the ROMs are placed in the correct socket. The following table lists part number versus reference designator for the new firmware ROMs.

| Reference Designator | HP Part Number |
|---|---|
| A2A11U5 | 08673-80047 |
| A2A11U6 | 08673-80048 |
| A2A11U7 | 08673-80049 |



www.valuetronics.com

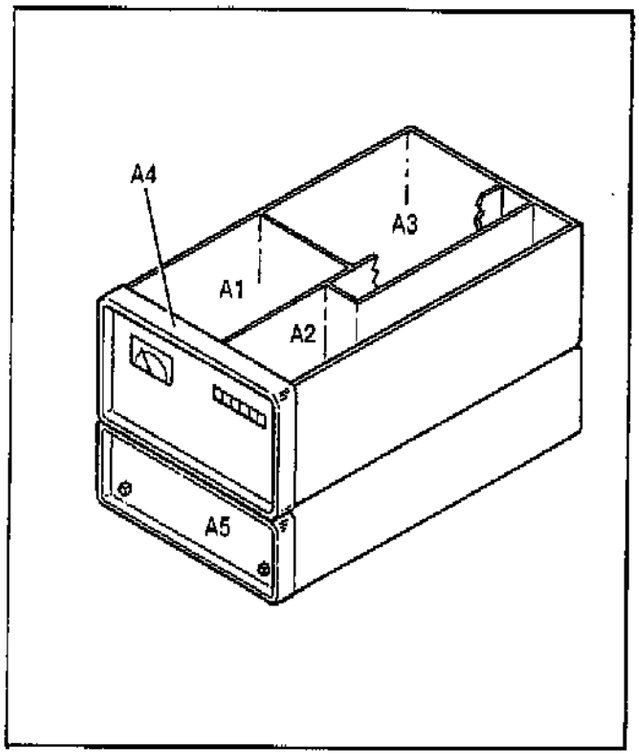


Major Assemblies

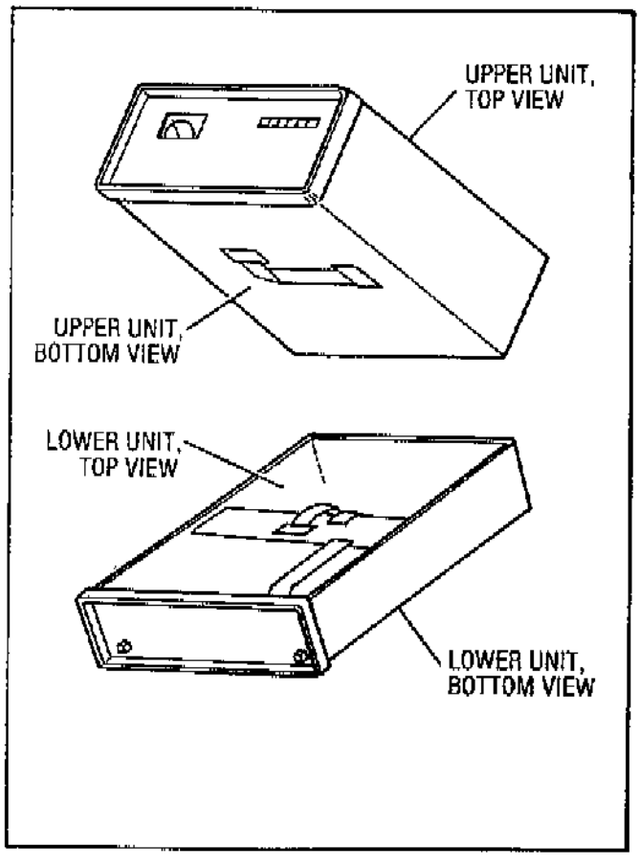


Internal View Identification

## Assemblies vs. Service Sheet List

| Assembly | Description | Ser.Sheet |
|---|---|---|
| A1A1 | Attenuator Driver Board Assembly | 18 |
| A1A2 | Detector Module Assembly | 14,17 |
| A1A2A1 | ALC Board Assembly | 14,17 |
| A1A2A2 | Detector Board Assembly | 17 |
| A1A3 | Function Board Assembly | 20 |
| A1A4 | Pulse Driver Board Assembly | 15 |
| A1A5 | DAC and Enable Board Assembly | 22 |
| A1A6 | Meter Board Assembly | 20,40 |
| A1A7 | YTM Driver Board Assembly | 16 |
| A1A8 | SRD Bias Board Assembly | 19 |
| A1A9 | Preamp Assembly | 14,16 |
| A1A10 | YTM Assembly | 16 |
| A1A10A1 | YIG Heater Control Assembly | 16 |
| A1A11 | Power Amplifier Assembly | 16 |
| A1A12 | Motherboard Assembly | 14-16,18-22, 30,31,40 |
| A1A13 | Terminal Strip | 37 |
| A1A14 | Amp Bias Board Assembly | 17 |
| A2A1 | Panel Driver Board Assembly | 25 |
| A2A2 | Key Code Board Assembly | 24 |
| A2A3 | VCO Assembly | 8 |
| A2A4 | Phase Detector Assembly | 7 |
| A2A5 | Divider Assembly 20/30 | 6 |
| A2A6 | Not Assigned | |
| A2A7 | I/O Board Assembly | 30,31 |
| A2A8 | Microprocessor Board Assembly | 26 |
| A2A9 | Frequency/HP-IB Board Assembly | 29 |
| A2A10 | RAM Board Assembly | 28 |
| A2A11 | ROM Board Assembly | 27 |
| A2A13 | Motherboard Assembly | 6-8,10, 20-32 |
| A2A14 | Rear Interconnect Board Assembly | 24,29, 31 |
| A2A15 | HP-IB Connector Board Assembly | 29 |
| A3A1 | Rectifier Assembly | 33 |
| A3A1A1 | Reference Phase Detector Assembly | 1,2 |
| A3A1A2 | 100 MHz VCXO Assembly | 2 |
| A3A1A3 | M/N Phase Detector Assembly | 3 |
| A3A1A4 | M/N VCO Assembly | 4 |
| A3A1A4A1 | VCO Resonator | 4 |
| A3A1A4A2 | VCO Board Assembly | 4 |
| A3A1A5 | M/N Output Assembly | 5 |
| A3A1A6 | M/N Reference Motherboard Assembly | 1-3,5 |
| A3A1A7 | Reference Housing Assembly | |
| A3A2 | Not Assigned | |
| A3A3 | Positive Regulator Assembly | 34 |
| A3A4 | Negative Regulator Assembly | 35 |
| A3A5 | DAC Assembly | 9 |
| A3A6 | YTO Driver Assembly | 10 |
| A3A7 | FM Driver Assembly | 13 |
| A3A8 | 10 MHz Reference Oscillator | 1 |
| A3A9 | YTO Loop Assembly | 11,12 |
| A3A9A1 | Directional Coupler Assembly | 13 |
| A3A9A2 | YTO Interconnect Assembly | 11-13 |
| A3A9A3 | 2.0 - 6.6 GHz YTO Assembly | 13 |
| A3A9A4 | YTO Phase Detector Assembly | 12 |
| A3A9A5 | Sampler Assembly | 11 |
| A3A9A6 | Attenuator Assembly | 13 |
| A3A9A7 | 6.2 GHz Low Pass Filter | 13 |
| A3A10 | Motherboard Assembly | 1,3,6,10, 12-14,21-23 26, 29-31, 33-35 |
| A4A1 | Front Panel Board Assembly | 20,22, 23,32,40 |
| A5A1 | Front Panel Board Assembly | 41,42,44 |
| A5A2 | Detector Module Assembly | 36,39 |
| A5A2A1 | ALC Board Assembly | 36,39 |
| A5A2A2 | Detector Board Assembly | 39 |
| A5A3 | Function Board Assembly | 42 |
| A5A4 | Pulse Driver Board Assembly | 37 |
| A5A5 | DAC and Enable Board Assembly | 44 |
| A5A6 | Switch Driver Board Assembly | 36,41 |
| A5A7 | YTM Driver Board Assembly | 38 |
| A5A8 | Motherboard Assembly | 36-38,40-44, 46,47 |
| A5A9 | Microprocessor Board Assembly | 43 |
| A5A10 | Power Supply Board Assembly | 45-47 |
| A5A11 | Regulator 2 Board Assembly | 46 |
| A5A12 | Regulator 1 Board Assembly | 46,47 |
| A5A13 | Pulse Input Assembly | 37 |
| A5A13A1 | Pulse Input Switch Board Assembly | 37 |

www.valuetronics.com

# SECTION VIII
# SERVICE

## 8-1. INTRODUCTION

This section contains information for troubleshooting and repairing the Signal Generator. Included are block diagrams, schematic diagrams, principles of operation, and procedures for troubleshooting, repair, disassembly, and reassembly.

## 8-2. FAILURE MODES AND SERVICE STRATEGY

### 8-3. General

Instrument problems usually fall into four general categories: turn-on errors, operator errors, instrument performance out of specification and catastrophic failures. The troubleshooting strategy is different for each catagory.

### 8-4. Turn-on Errors

An error message displayed on the front panel when the Signal Generator is turned on indicates that the built-in diagnostic routine has detected some problem. Turn the instrument off and on again. If the error repeats, do one of the following:

a. Press Recall 0. If operation seems to be normal, the instrument may be useable with limited functions.

b. Go to Service Sheet BD1 to begin troubleshooting.

### 8-5. Operator Errors

Apparent failures often result from operator errors and may take one of three forms: invalid entry (message codes 01-09), "soft errors" that result from incorrect combinations of sweep entries (message codes 10-16), and HP-IB errors (message codes 20-24). Refer to Table 3-8 or the Pullout Card for additional information on these errors.

### 8-6. Instrument Performance Out of Specification

Two levels of testing can be performed to verify that the instrument is operating normally and within specification. The first level of testing is the Operation Verification Tests in Section IV, Part 1 of this manual. These tests involve the least amount of time and can reveal much about overall operation. For a complete test, perform the full Performance Tests in Section IV Part 2. The specifications are listed in Table 1-1.

If a parameter is only slightly out of limits, it can often be brought into specification by an adjustment. The procedures for all adjustments are in Section V. If the adjustment fails to bring the parameter into specification, use the troubleshooting procedures starting on Service Sheet BD1.

### 8-7. Catastrophic Failures

When a catastrophic failure occurs, begin troubleshooting on Service Sheet BD1. The information there is used to quickly isolate the problem to one of the major functional sections of the instrument. Troubleshooting catastrophic failures in the Signal Generator is structured into three levels:

a. The overall troubleshooting level, where problems are isolated to the power supply or one of the functional sections. This level of troubleshooting is supported by Service Sheet BD1, which includes diagrams, theory of operation, and troubleshooting information.

b. The functional level of troubleshooting isolates the malfunction to a circuit or circuit board. This level of troubleshooting is supported by Service Sheets BD2 through BD9, which include diagrams, theory of operation, and troubleshooting information.

c. Circuit level troubleshooting isolates the problem to a stage within the circuits shown on the schematic. This level of troubleshooting is supported by Service Sheets 1-47, which include circuit level block diagrams, schematics, theory of operation, and troubleshooting information. It is expected that further troubleshooting, to the component level, depends on the skill and experience of the troubleshooter.

## 8-8. SERVICE SHEETS

The foldout pages in the last part of this section are the service sheets. They consist of block diagrams, circuit schematic diagrams, supplemental diagrams, troubleshooting information, internal views, and disassembly procedures.



www.valuetronics.com

## 8-9. MANUAL BACKDATING(†)

A dagger (†) by an item of service information means that the information is different for instruments with serial number prefixes lower than the one shown on the manual's title page. Table 7-1, Manual Changes by Serial Number lists the backdating changes and their related serial number prefix. The backdating changes are contained in Section VII.

## 8-10. MANUAL UPDATING (Manual Changes Supplement)

Production changes to the instrument made after the publication date of this manual are indicated by a change in the serial number prefix. Changes to this manual are identified by serial number prefix on the Manual Changes supplement. Errors are also noted in the ERRATA portion of the Manual Changes supplement.

Keep this manual up to date by periodically requesting the latest supplement from your Hewlett-Packard office.

## 8-11. SAFETY CONSIDERATIONS

### 8-12. Before Applying Power

Verify that the instrument is set to match the available line voltage and that the correct fuse is installed. An uninterrupted safety earth ground must be provided from the main power source to the instrument input wiring terminals, power cable, or supplied power cable set.

### 8-13. Warnings and Cautions

Pay attention to WARNINGS and CAUTIONS. They must be followed for your protection and to avoid damage to the equipment.

**WARNINGS**

*Maintenance described herein is performed with power supplied to the instrument and with protective covers removed. Such maintenance should be performed only by service-trained personnel who are aware of the hazards involved (for example, fire and electrical shock). Where maintenance can be performed without power supplied, the power should be removed.*

*Any interruption of the protective (grounding) conductor (inside or outside the instrument) or disconnecting the protective earth terminal will cause a potential shock hazard that could result in personal injury. (Grounding one conductor of a two conductor outlet is not sufficient protection.) In addition, verify that a common ground exists between the unit under test and this instrument prior to energizing either unit.*

*Whenever it is likely that the protection has been impaired, the instrument must be made inoperative and be secured against any unintended operation.*

*If this instrument is to be energized via an autotransformer (for voltage reduction) make sure that the common terminal is connected to neutral (that is, the grounded side of the mains supply).*

*Servicing instructions are for use by service-trained personnel only. To avoid dangerous electric shock, do not perform any servicing unless qualified to do so.*

*Adjustments described in the manual are performed with power supplied to the instrument while protective covers are removed. Energy available at many points may, if contacted, result in personal injury.*

*Capacitors inside the instrument may still be charged even if the instrument has been disconnected from its source of supply.*

*For continued protection against fire hazard, replace the line fuse(s) only with 250V fuse(s) of the same current rating and type (for example normal blow, time delay, etc.). Do not use repaired fuses or short circuited fuseholders.*

**CAUTION**

*Do not disconnect or remove any boards in the Signal Generator unless the instrument is turned off or unplugged. Some boards contain devices that can be damaged if the board is removed when the power is on. Several components, including MOS devices, can be damaged by electrostatic dischage. Use conductive foam and grounding straps when servicing is required on sensitive components. Use care when unplugging ICs from high-grip sockets.*



www.valuetronics.com

### 8-14. After Service Safety Checks

Visually inspect interior of instrument for any signs of abnormal internally generated heat, such as discolored printed circuit boards or components, damaged insulation, or evidence of arcing. Determine and remedy the cause of any such condition.

Using a suitable ohmmeter, check resistance from instrument enclosure to ground pin on power cable plug. The reading must be less than one ohm. Flex the power cable while making this measurement to determine whether intermittent discontinuities exist.

Check any indicated front or rear panel ground terminals that are marked, using the above procedures.

Check resistance from instrument enclosure to line and neutral (tied together) with the power switch on and the power source disconnected. The minimum acceptable resistance is two megohms. Replace any component that results in a failure.

Check line fuse to verify that a correctly rated fuse is installed.

## 8-15. RECOMMENDED TEST EQUIPMENT

Test equipment and accessories required to maintain the Signal Generator are listed in Table 1-3, Recommended Test Equipment. Equipment other than that listed may be used if it meets the critical specifications listed in the table.

## 8-16. SERVICE TOOLS, AIDS, AND INFORMATION

### 8-17. Service Accessories

| | |
|---|---|
| HP 11726-10004 | Adjustment Cassette |
| HP 11726-60004 | Super Extender 3 Test Board |
| HP 11726-60001 | MPU Test Connector |
| HP 11726-60002 | 3-Connector Extender Board |
| HP 08672-60117 | 30-pin Extender Board |
| HP 08672-60020 | 36-pin Extender Board (2 req.) |
| HP 05342-60035 | 48-pin Extender Board |
| HP 5060-0258 | 24-pin Extender Board |
| HP 8120-1578 | Cable Assembly |
| HP 1250-1158 | Female SMA to Female SMA Adapter |
| HP 11611-60056 | Cable Assembly |
| HP 1250-1237 | Male SMB to Female BNC Adapter |
| HP 1250-1391 | SMB Tee |
| HP 08673-60123 | Test Connector |
| HP 86730-60051 | Extender Cable |

### 8-18. Service Functions

The Service Functions listed in Table 8-2 are used in the adjustment procedures in Section V, and in Power-up checks. They can be executed manually or via HP-IB control. Service Functions are activated manually by entering the proper service number from the front panel and then pressing the switch located on the top of the Keycode Board (A2A2). In remote, these functions can be activated by programming a data message with the service number followed by the program code "SV."

### 8-19. Signature Analysis

Signature analysis is a simple means of verifying the operation of digital circuitry. When properly used, signature analysis can detect extremely subtle hardware faults. Signatures must identically match those given in the signature tables. Service Sheets BD1-8 contain the troubleshooting information.

### 8-20. Pozidriv Screwdrivers

Many screws in the Signal Generator appear to be Phillips type, but are not. To avoid damage to the screw head slots, Pozidriv screwdrivers should be used. HP 8710-0899 is the No. 1 Pozidriv. HP 8710-0900 is the No. 2 Pozidriv.

### 8-21. Tuning Tools

For adjustments requiring non-metalic tuning tools, use the HP 8710-0033 blade tuning tool or the HP 8710-1010 (JFD Model No. 5284) hex tuning tool. For other adjustments an ordinary small screwdriver or suitable tool is sufficient. No matter which tool is used, never force any adjustment control. This is especially critical when adjusting variable inductors or capacitors.

### 8-22. Heat Staking Tools

The front panel pushbutton switches have small plastic posts protruding from the back. These posts fit through holes in the front panel printed circuit board and are melted down to hold the switch in place. This process is known as heat staking. The heat staking tool is a standard soldering iron with a special tip attached.

Refer to the paragraph entitled Replacement of Key Cap and Pushbutton Switches under REPAIR AND REPLACEMENT in this section for the heat staking procedure.



www.valuetronics.com

## Table 8-1. Schematic Diagram Notes (1 of 8)

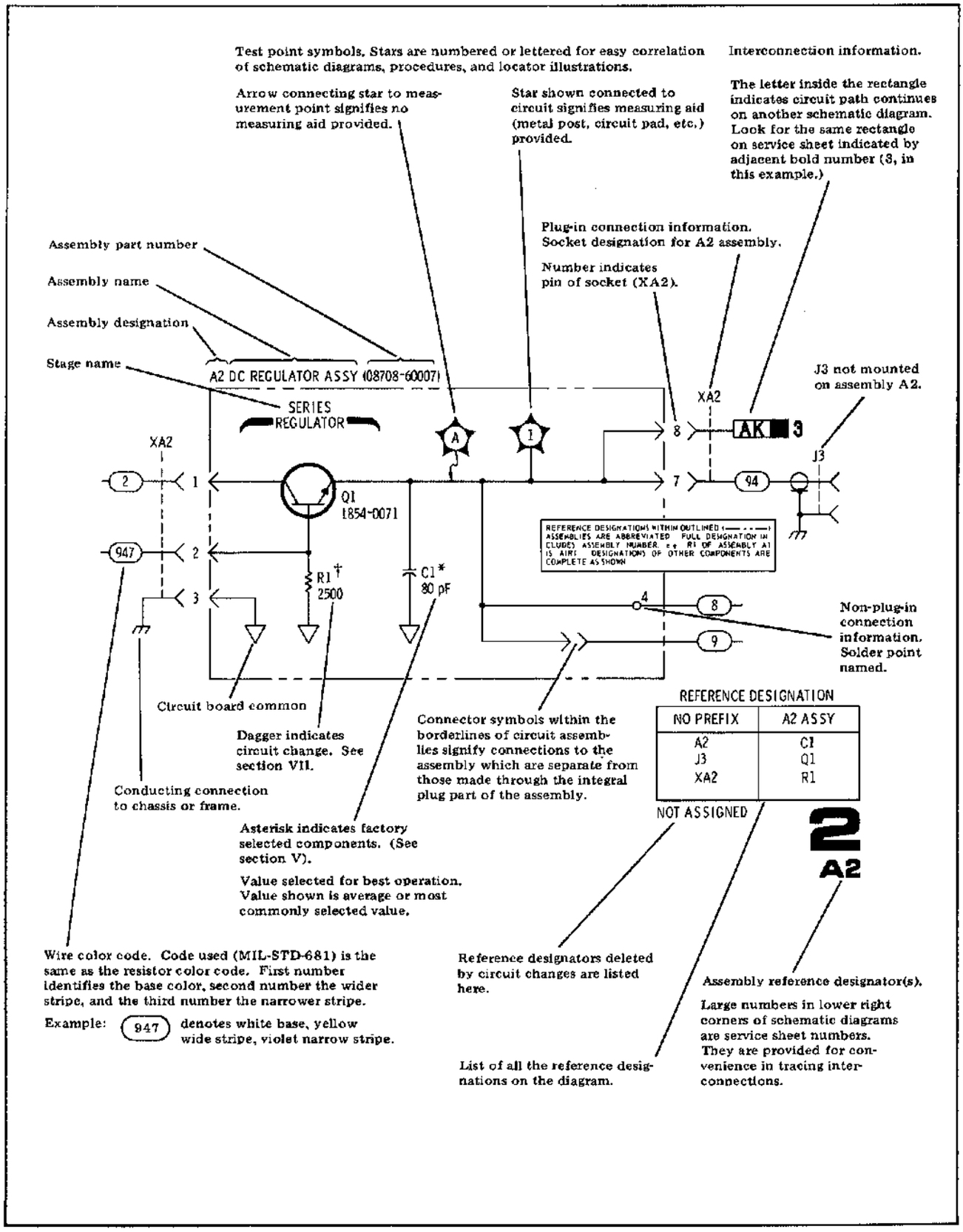




www.valuetronics.com

**Table 8-1. Schematic Diagram Notes (2 of 8)**

## SCHEMATIC DIAGRAM NOTES

* Asterisk denotes a factory-selected value. Value shown is typical.

† Dagger indicates circuit change. See Section VII.

Tool-aided adjustment. ○ Manual control.

Encloses front-panel designation.

Encloses rear-panel designation.

Circuit assembly borderline.

Other assembly borderline.

Heavy line with arrows indicates path and direction of main signal.

Heavy dashed line with arrows indicates path and direction of main feedback.

Indicates stripline (i.e., RF transmission line above ground).

CW Wiper moves toward cw with clockwise rotation of control (as viewed from shaft or knob).

1 Numbered Test Point
measurement aid provided.

Encloses wire or cable color code. Code used is the same as the resistor color code. First number identifies the base color, second number identifies the wider stripe, and the third number identifies the narrower stripe, e.g., denotes white base, yellow wide stripe, violet narrow stripe.

A direct conducting connection to earth, or a conducting connection to a structure that has a similar function (e.g.; the frame of an air, sea, or land vehicle).

A conducting connection to a chassis or frame.

Common connections. All like-designation points are connected.

AK 12 Letters = off-page connection, e.g., AK
Number = Service Sheet number for off-page connection, e.g., 12

1 THIS PAGE Number (only) = on-page connection.



www.valuetronics.com

**Table 8-1. Schematic Diagram Notes (3 of 8)**

## SCHEMATIC DIAGRAM NOTES

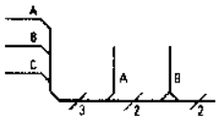


Indicates multiple paths represented by only one line. Letters or names identify individual paths. Numbers indicate number of paths represented by the line.

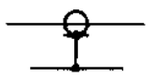

Coaxial or shielded cable.

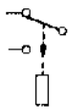

Relay. Contact moves in direction of arrow when energized.

Indicates a pushbutton switch with a momentary (ON) position.

Indicates a PIN diode.

Indicates a current regulation diode.

Indicates a voltage regulation diode.

Indicates a Schottky (hot-carrier) diode.

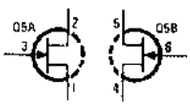


Multiple transistors in a single package—physical location of the pins is shown in package outline on schematic.

Identification of logic families as shown (in this case, ECL).

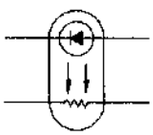

Indicates an opto-isolator of a LED and a photoresistor packaged together. The resistance of the photoresistor is a function of the current flowing through the LED.



www.valuetronics.com

Table 8-1. Schematic Diagram Notes (4 of 8)

## DIGITAL SYMBOLOGY REFERENCE INFORMATION

### Input and Output Indicators

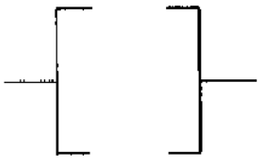

Implied Indicator—Absence of polarity indicator (see below) implies that the active state is a relative high voltage level. Absence of negation indicator (see below) implies that the active state is a relative high voltage level at the input or output.

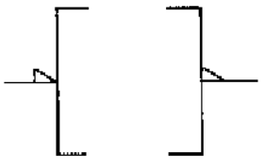

Polarity Indicator—The active state is a relatively low voltage level.

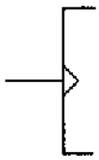

Dynamic Indicator—The active state is a transition from a relative low to a relative high voltage level.

Inhibit Input—Input that, when active, inhibits (blocks) the active state outputs of a digital device.

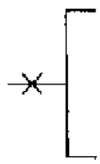

Analog Input—Input that is a continuous signal function (e.g., a sine wave).

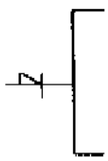

Polarity Indicator used with Inhibit Indicator—Indicates that the relatively low level signal inhibits (blocks) the active state outputs of a digital device.

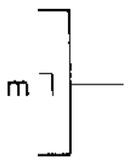


Output Delay—Binary output changes state only after the referenced input (m) returns to its inactive state (m should be replaced by appropriate dependency or function symbols).

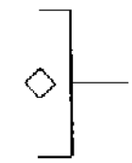

Open Collector Output—Output that must form part of a distributed connection.



www.valuetronics.com

**Table 8-1. Schematic Diagram Notes (5 of 8)**

## DIGITAL SYMBOLOGY REFERENCE INFORMATION

### Input and Output Indicators (Cont'd)

| | |
|---|---|
| 3-STATE | Three-state Output—Indicates outputs that can have a high impedance (disconnect) state in addition to the normal binary logic states. |

### Combinational Logic Symbols and Functions

| | |
|---|---|
| & | AND—All inputs must be active for the output to be active. |
| ≥1 | OR—One or more inputs being active will cause the output to be active. |
| ≥m | Logic Threshold—m or more inputs being active will cause the output to be active (replace m with a number). |
| =1 | EXCLUSIVE OR—Output will be active when one (and only one) input is active. |
| =m | m and only m—Output will be active when m (and only m) inputs are active (replace m with a number). |
| = | Logic Identity—Output will be active only when all or none of the inputs are active (i.e., when all inputs are identical, output will be active). |
| 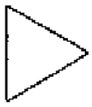 | Amplifier—The output will be active only when the input is active (can be used with polarity or logic indicator at input or output to signify inversion). |
| X/Y | Signal Level Converter—Input level(s) are different than output level(s). |
|  | Bilateral Switch—Binary controlled switch which acts as an on/off switch to analog or binary signals flowing in both directions. Dependency notation should be used to indicate affecting/affected inputs and outputs. Note: amplifier symbol (with dependency notation) should be read to indicate unilateral switching. |
| X—Y | Coder—Input code (X) is converted to output code (Y) per weighted values or a table. |
| (Functional Labels) | The following labels are to be used as necessary to ensure rapid identification of device function. |
| MUX | Multiplexer—The output is dependent only on the selected input. |
| DEMUX | Demultiplexer—Only the selected output is a function of the input. |
| CPU | Central Processing Unit |
| PIO | Peripheral Input/Output |
| SMI | Static Memory Interface |



www.valuetronics.com

**Table 8-1. Schematic Diagram Notes (6 of 8)**

## DIGITAL SYMBOLOGY REFERENCE INFORMATION

### Sequential Logic Functions

| | |
|---|---|
| 1 | Monostable—Single shot multivibrator. Output becomes active when the input becomes active. Output remains active (even if the input becomes inactive) for a period of time that is characteristic of the device and/or circuit. |
| G | Oscillator—The output is a uniform repetitive signal which alternates between the high and low state values. If an input is shown, then the output will be active if and only if the input is in the active state. |
| FF | Flip-Flop—Binary element with two stable states, set and reset. When the flip-flop is set, its outputs will be in their active states. When the flip-flop is reset, its outputs will be in their inactive states. |
| T | Toggle Input—When active, causes the flip-flop to change states. |
| S | Set Input—When active, causes the flip-flop to set. |
| R | Reset Input—When active, causes the flip-flop to reset. |
| J | J Input—Analogous to set input. |
| K | K Input—Analogous to reset input. |
| D | Data Input—Always enabled by another input (generally a C input—see Dependency Notation). When the D input is dependency-enabled, a high level at D will set the flip-flop; a low level will reset the flip-flop. Note: strictly speaking, D inputs have no active or inactive states—they are just enabled or disabled. |
| m | Count-Up Input—When active, increments the contents (count) of a counter by "m" counts (m is replaced with a number). |
| −m | Count-Down Input—When active, decrements the contents (count) of a counter by "m" counts (m is replaced with a number). |
| →m | Shift Right (Down) Input—When active, causes the contents of a shift register to shift to the right or down "m" places (m is replaced with a number). |
| ←m | Shift Left (Up) Input—When active, causes the contents of a shift register to shift to the left or up "m" places (m is replaced with a number). |

**NOTE**

*For the four functions shown above, if m is one, it is omitted.*

| | |
|---|---|
| (Functional Labels) | The following functional labels are to be used as necessary in symbol build-ups to ensure rapid identification of device function. |



www.valuetronics.com

## SERVICE SHEET BD3 (cont'd)

## TROUBLESHOOTING

### General

It is assumed that the troubleshooting information associated with Service Sheet BD1 was used to isolate the problem to either or both of the following:

- Low Frequency Source (LFS) Loop
- M/N Loop

The following troubleshooting procedures can be used to further isolate the problem to one of the following subassemblies:

LFS Loop
- 20/30 Divider
- 20/30 Phase Detector
- VCO 160—240 MHz

M/N Loop
- M/N Phase Detector
- M/N VCO
- M/N Output

### Test Equipment Required

Frequency Counter .... HP5343A
Oscilloscope .....HP1980A/B-811/860
Digital Voltmeter .....HP3456A

The following procedures are divided into ten checks, as follows:

LFS Loop Checks

10 MHz Reference Check (✓1)

20/30 Divider Check (✓2)

160—240 MHz VCO Check (✓3)

20/30 Phase Detector Check (✓4)

M/N Loop Checks

20 MHz Reference Check (✓5)

400 MHz Reference Check (✓6)

M/N Phase Detector Check (✓7)

200 kHz Filter Check (✓8)

M/N VCO Check (✓9)

M/N Output Check (✓10)

### LFS Loop Checks.

10 MHz Reference Checks (✓1)

1. Remove blue cable (6) from J1 of A2A13 motherboard and connect it to the counter.

   The frequency should be 10 MHz ±30 Hz.

   If the frequency is correct, proceed with Step 2.

   If the frequency is not correct, the Reference Loop is faulty. Proceed to Service Sheet 2 to troubleshoot the Reference Loop.

20/30 Divider Check (✓2)

2. Replace the blue cable on A2A13J1 and connect the oscilloscope to A2A5TP2, 80 kHz REF.

   The waveform should be as shown in Figure 8-28.

   If the waveform is as shown, proceed with step 3.

   If the waveform is not as shown, the divide by 125 divider chain on A2A5 is faulty. Proceed to Service Sheet 6 for troubleshooting.

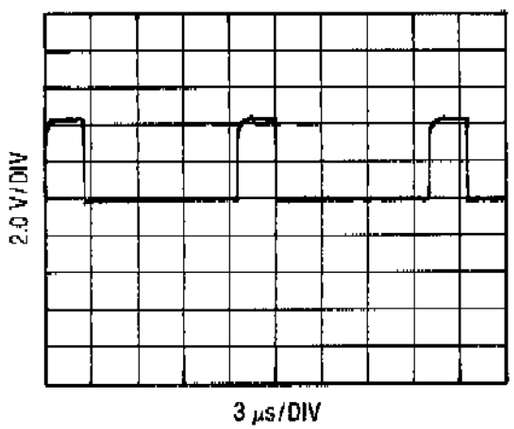


**Figure 8-28. 80 kHz Reference, A2A5TP2**

3. Remove A2A3, set the Test Switch to TEST HIGH FREQ, and replace A2A3. This opens the LFS loop by placing a fixed voltage on the VCO input.

4. Press RCL 0 and connect the oscilloscope to A2A5TP3. The waveform should be as shown in Figure 8-29.

   If the waveform is as shown, proceed with Step 9. If the waveform is not as shown, proceed with Step 5 to see if the problem is with 20/30 Divider A2A5 or with faulty inputs from the DCU.



www.valuetronics.com

Table 8-1. Schematic Diagram Notes (8 of 8)

## DIGITAL SYMBOLOGY REFERENCE INFORMATION

### Miscellaneous

Schmitt Trigger—Input characterized by hysterisis; one threshold for positive going signals and a second threshold for negative going signals.

Active

Active State—A binary physical or logical state that corresponds to the true state of an input, an output, or a function. The opposite of the inactive state.

Enable

Enabled Condition—A logical state that occurs when dependency conditions are satisfied. Although not explicitly stated in the definitions listed above, functions are assumed to be enabled when their behavior is described. A convenient way to think of it is as follows:

A function becomes active when:

- it is enabled (dependency conditions—if any—are satisfied)
- and its external stimuls (e.g., voltage level) enters the active state.



www.valuetronics.com

Table 8-2. Service Functions

| Service Number | Function |
|---|---|
| 1 | Performs a test of the RAM circuit. While the test is being performed, the FREQUENCY MHz display indicats 00. If a display other than 00 is present, that number indicates which part(s) of the RAM failed. Refer to Service Sheet BD8 for an explanation of the error codes. |
| 2 | Performs a checksum test of the microprocessor ROM. Refer to Service Sheet BD8 for an explanation of the error codes. |
| 3 | Disables the YTM AUTO PEAK tuning function and sweeps the YTM over a limited range so the tuning curve can be examined. |
| 4 | Disables the YTM AUTO PEAK tuning function and centers the YTM peak tuning DAC. |
| 6 | Stores the start and stop frequencies in storage registers 1 through 4. These frequencies can be recalled by pressing RCL1, RCL2, RCL3, or RCL4. This function can be used when performing individual band tests or adjustments. |
| 7 | Tests pulse modulation video feedthrough. |
| 8 | Switches amplifier A1A14AR1 (Option 008) in. |
| 9 | Switches amplifier A1A14R1 (Option 008) out. |
| 10 | Switches amplifier A1A14R1 to normal operation. |
| 11 | Displays setting of configuration switch A2A7S1 (W1—W7). |
| 33 | Disables the YTF tuning function and sweeps the YTF over a limited range so the tuning curve can be examined. |
| 34 | Disables the YTF AUTO PEAK tuning function and centers the YTF peak tuning DAC. |
| 35 | Inhibits YTF peaking. |
| 36 | Inhibits YTM peaking. |
| 37 | Re-enables peaking. |

### 8-23. Hardware

The Signal Generator has a mixture of Unified National (inch) and metric screws. The metric screws are defined in Industrial Fasteners publication (IFI 500) and are identified in the replaceable parts list as M (metric). Metric screws have a shiny silver appearance and are used throughout the instrument. The Unified National screws have a dull steel-gray appearance. Do not use a metric screw in a Unified National nut; thread damage will result.

### 8-24. Assembly Locations

Assemblies in the Signal Generator are numbered in groups, both by function and by location. Refer to lettered service sheet(s) for identification of assemblies. In addition, each tab has major assembly location figures. Also, each tab has a table listing the Service Sheets where each major assembly is found.

### 8-25. Parts and Cable Locations

The location of individual components mounted on printed circuit boards or other assemblies are shown near the schematic diagram. The part reference designator is the assembly designator plus the part designator. For example, A2A3R9 is R9 on the A2A3 assembly. For specific component descriptions and ordering information, refer to Table 6-3, Replaceable Parts, in Section VI. Chassis and frame parts, as well as mechanical parts (MP) and cables (W), are identified on illustrated parts breakdowns (IPB) in Section VI, or in this section on the lettered diagrams.



www.valuetronics.com

### 8-26. Test Points and Adjustment Locations

Most test points and adjustments are indicated on circuit board assemblies. Test points and adjustments can also be found on the component locator figure near the assembly's schematic diagram. Test points identified on block diagrams are also shown on the lettered service sheets following the schematic diagram foldouts.

### 8-27. Service Aids on Printed Circuit Boards

Service aids on printed circuit boards include test points, indicator lights, some reference designations, adjustment names, and assembly part numbers.

### 8-28. Other Service Documents

Service Notes, Manual Change Supplements, and other service literature are available through Hewlett-Packard. For further information, contact your nearest Hewlett-Packard office.

### 8-29. REPAIR AND REPLACEMENT

### 8-30. After Repair Adjustment Procedure

After repairs are made, adjustments may be needed to assure optimum performance. Refer to Table 5-3, Post Repair Adjustments in Section V of this volume to determine what, if any, adjustments are needed after any repair is made.

### 8-31. Disassembly and Reassembly Procedures

Disassembly and reassembly procedures begin on Service Sheet A. Top and bottom cover removal procedures are described there and also in the following paragraph.

### 8-32. Top and Bottom Cover Removal

1. Place the instrument with the appropriate cover up.
2. Remove the appropriate rear panel standoffs MP33.
3. Loosen the captive screw securing the cover to the frame.
4. Slide the cover to the rear and remove.
5. For replacement, follow the above steps in the inverse order.

### 8-33. Front Panel Key Cap Replacement

If key cap replacement is necessary, removing the front panel key cap can be done in one of two ways. If the front panel has been removed, as described on the lettered service sheet diagrams, use a small flat blade screwdriver to press on the switch side of the key cap while working it from side-to-side with your fingers. Removing the key cap without opening the instrument is done as follows. Grasp the key cap firmly with pliers. Work it from side-to-side while pulling away from the panel.

**NOTE**

*The pliers may damage the key cap unless the jaws are covered with a protective material.*

*Be sure the key cap is aligned properly before snapping into place. Note that the key cap has 8 possible postions (see Figure 8-1).*

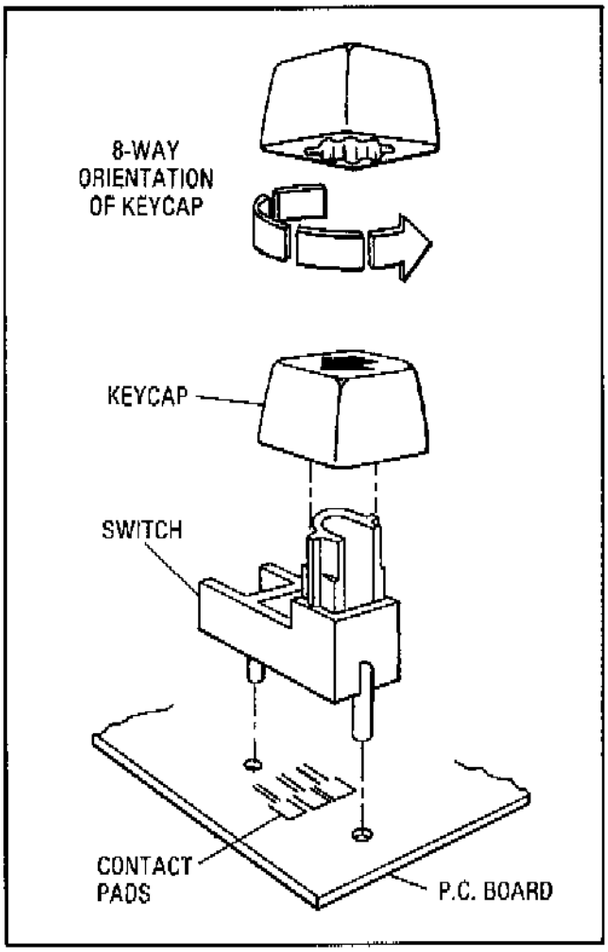


**Figure 8-1. Front Panel Pushbutton Switch Assembly**

### 8-34. Front Panel Switch Replacement.

**NOTE**

*The front panel switch traces and contacts are specially cleaned at the factory*



www.valuetronics.com

**Front Panel Switch Replacement (cont'd)**

**NOTE (cont'd)**

*Do not handle or attempt to clean them. Wear linen gloves when making any repairs.*

The front panel switches have a very high cycle life. However, if one becomes faulty and needs replacement, follow the procedure outlined below:

1. Remove the front panel by referring to the disassembly procedure in Service Sheet A following the schematic foldouts.

2. Remove the key cap as indicated above.

3. Remove the switch by chipping away the melted plastic tabs at the circuit side of the keyboard that hold the switch in place.

**NOTE**

*The following operation should be done in a well ventilated area. If the heat staking tip is too hot, the plastic will vaporize and emit fumes. However, these fumes are non-toxic.*

4. For reliable operation, the switch must be mounted tightly against the printed circuit board. To facilitate the heat staking operation, specially molded support anvils (HP 5040-6881) can be ordered. See Figure 8-2.

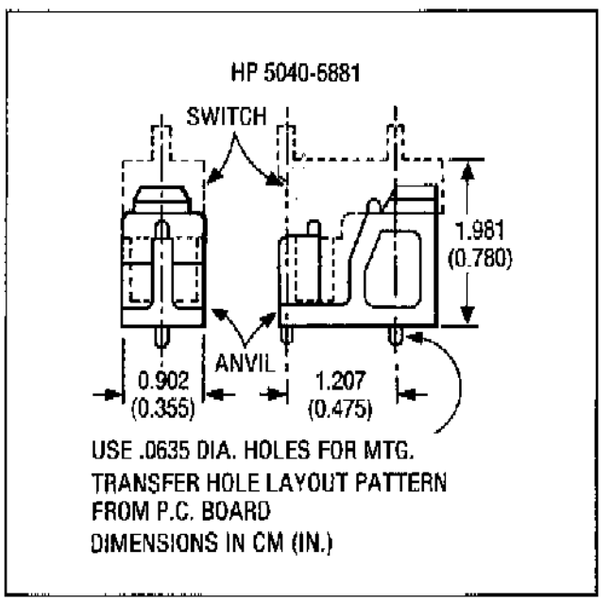


**Figure 8-2. Pushbutton Switch Support Anvil**

**NOTE**

*Do not disturb the assembly for at least 10 seconds after heat staking.*

*If not enough heat is applied, the plastic will tend to stick to the tip of the iron.*

*If too much heat is applied, the plastic will fume profusely, the plastic post will be irregularly shaped, and the plastic will be permanently discolored.*

*If the staking tool is worn or flaked, it will cause a misshaped plastic post and/or a contamination deposit on the surface.*

5. To ensure proper switch assembly, verify that the switch is pushed firmly against the circuit board and, with the hot (440°C or 825°F) staking tip (see Figure 8-3) push down on each of the two posts on the switch. Each post should take about one second to stake. With the proper cycle, the post should turn a darker color and, in about ten seconds, return to its original bright red color. The correctly staked post should have a smooth round rivet-like top. See Figure 8-4.

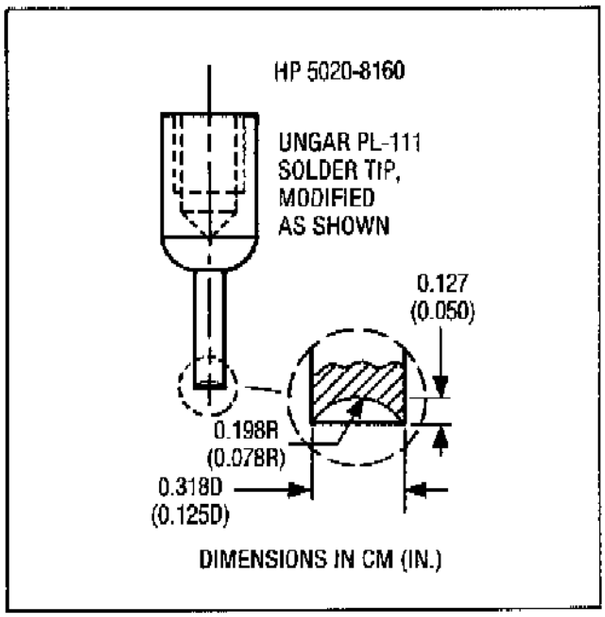


**Figure 8-3. Heat Staking Tip**

**8-35. Etched Circuits (Printed Circuit Boards)**

The etched circuit boards in the Signal Generator have plated through holes which make a



www.valuetronics.com

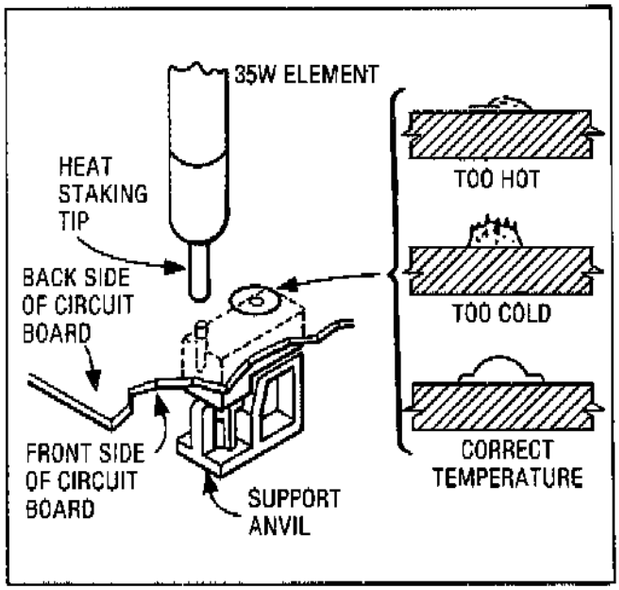


**Figure 8-4. Typical Assembly for Heat Staking Operation**

### Etched Circuits (Printed Circuit Boards) (cont'd)

solder path through to both sides of the insulating material. Soldering can be done from either side of the board with equally good results. When soldering to any circuit board, keep in mind the following recommendations:

1. Avoid unnecessary component unsoldering and soldering. Excessive replacement can result in damage to the circuit board and/or adjacent components.
2. Do not use a high power soldering iron on etched circuit boards. A 35-watt soldering iron is recommended. Excessive heat may lift a conductor or damage the board.

CAUTION

*Do not use a sharp metal object such as an awl or twist drill in the following step. Sharp objects may damage the plated through conductor.*

3. Use a suction device or wooden toothpick to remove solder from component mounting holes. When using a suction device make sure that equipment is properly grounded to prevent electrostatic discharge from damaging MOS devices. Refer to Table 8-3, Etched Circuit Soldering Equipment, for information on available tools for working on etched circuit boards.

### 8-36. Electrostatic Discharge (ESD) Precautions

Electrostatic discharge (ESD) can cause damage to certain devices in the Signal Generator. The damage can range from slight degradation of a parameter to catastrophic failures.

MOS, CMOS, and other static sensitive devices are used in this instrument. They are prone to damage from both static electricity and transient signals. They must be handled carefully. When working on the Signal Generator, keep in mind the following recommendations to avoid damaging these sensitive components.

1. Use a static-free work station with a pad of conductive rubber or similar material.
2. Do not remove any board unless the Signal Generator has been turned off or unplugged.
3. When removing a MOS or CMOS device from a high grip socket, be careful not to damage it. Avoid removing devices from these sockets with pullers. Instead, use a small screwdriver to pry the device up from one end, slowly pulling it up one pair of pins at a time.
4. Once a MOS or CMOS device has been removed from an assembly, immediately stick it into a pad of conductive foam or other suitable holding medium.
5. When replacing a MOS or CMOS device, ground the foam on which it resides to the instrument before removing it. If a device requires soldering, make sure that the assembly is lying on a pad of conductive material, and that the pad and soldering, iron tip, and personnel, are grounded to the assembly. Apply as little heat as possible.
6. Before turning the instrument off, remove any large ac sources that may be driving MOS switches.

### 8-37. Module Exchange Program

Table 6-1 lists assemblies that are available on an exchange basis. Refer to the table, and the EXCHANGE ASSEMBLIES paragraph in Section VI for further information.

### 8-38. Non-Repairable Assemblies

The following assemblies are not factory repairable and must be discarded.
A1CP1 Bias Tee
A1AT2 Isolator



www.valuetronics.com

**Table 8-3. Etched Circuit Soldering Equipment**

| Item | Use | Specification | Item Recommended | HP Part No. |
|---|---|---|---|---|
| Soldering Tool | Soldering, Heat Staking | Wattage: 35W<br>Tip Temp.: 390—440½C (735—825½F) | Ungar No. 135<br>Ungar Division<br>Eldon Ind. Corp.<br>Compton, CA 90220 | 8690-0167 |
| Soldering Tip | Soldering, Unsoldering | *Shape: Chisel | *Ungar PL113 | 8690-0007 |
| Soldering Tip | Heat Staking | Shape: Cupped | HP 5020-8160 or modified Ungar PL11 | 5020-8160 |
| De-Solder Aid | To remove molten solder from connection | Suction Device | Soldapullt by Edsyn Co., Van Nuys, CA 91406 | 8690-0060 |
| Rosin (flux) Solvent | To remove excess flux from soldered area before application of protective coating | Must not dissolve etched circuit base board. | Freon TF | 8500-0232 |
| Solder | Component replacement; Circuit Board repair wiring | Rosin (flux core, high tin content (63/37 tin/lead), 18 gauge (SWG) 0.048 in. diameter preferred. | | 8090-0607 |

*For working on circuit boards; for general purpose work, use No. 555 Handle (8690-0261) and No. 4037 Heating Unit 47½ — 56½ W (HP 8690-0006); tip temperature of 850 — 900½F; and Ungar No. PL113 ⅛" chisel tip.

### Non-Repairable Assemblies (cont'd)

A1AT3 Pulse Modulator
A1AT5 Isolator
A1AT6 Isolator
A1AT4 Attenuator, 2 dB
A1CR1 Crystal Detector
A1FL1 High Pass Filter
A1K1 RF Relay
A1K2 RF Relay
A2A2 Rotary Pulse Generator
A3A9A1 Directional Coupler
A3A9A6 Attenuator
A3A9A7 Low Pass Filter
A3A9U1 Sampler
A5AR1 40 dB Amplifier
A5AT1 Isolator
A5AT2 Pulse Modulator
A5AT3 ALC Modulator
A5AT4 Attenuator, 10 dB
A5CR1 Crystal Detector
A5CP1 Bias Tee
A5DC1 Directional Coupler
A5FL1 High Pass Filter, 20.5 GHz
A5FL2 Band Pass Filter, 6-22 GHz
A5FL3 Low Pass Filter, 3.5 GHz
A5FL4 Low Pass Filter, 6.5 GHz
A5FL5 Low Pass Filter, 2 GHz
A5FL6 High Pass Filter, 2 GHz
A5FL7 Low Pass Filter, 4.5 GHz
A5FL8 Low Pass Filter, 2 GHz
A5G2 Local Oscillator, 4.2 GHz
A5K1 RF Relay
A5U1 Mixer



www.valuetronics.com

### 8-39. Factory Selected Components (*)

Some component values are selected at the factory to provide optimum compatibility with associated components. These components are identified on individual schematics and the replaceable parts list by an asterisk (*). Refer to Table 5-1, Factory Selected Components, for the selection procedures.

### 8-40. CLEANING

### 8-41. Cleaning Intervals

Hewlett-Packard recommends a 6-month interval between cleaning for some parts of the Generator and a 12-month interval for other parts. However, cleaning intervals are mostly dependent upon where the Generator is used. The Generator should be cleaned more often if it is used in a dusty or very humid area.

### 8-42. Cleaning Solution

Hewlett-Packard recommends using either of two cleaning solutions on printed circuit (pc) board edge connectors. For best cleaning results, we recommend an ammonium hydroxide solution ($NH_4OH$, 29.5% $NH_3$ by weight). However, using concentrated solutions of ammonia requires using gloves, eye goggles, and proper ventilation. The second recommendation is an 80:20 solution of isopropyl alcohol and water ($IPA/H_2O$). This should serve as a satisfactory cleaner where one would rather not use ammonia hydroxide.

### 8-43. Top Cover Removal and Replacement

1. At the rear corners of the top cover, remove the two plastic standoffs (MP33 in Figure 8-302).
2. At the center-rear of the top cover, loosen the captive screw securing the cover to the frame.
3. Slide the cover to the rear and remove it.
4. When the cleaning is completed, position the cover on top of the Generator and gently slide it as far forward as possible.
5. Secure the cover to the frame by tightening the captive screw at the center-rear of the cover.
6. Replace the two plastic standoffs to the rear corners of the Generator (see MP33 in Figure 8-302).

### 8-44. 6-Month Cleaning

**WARNING**

*Before cleaning, make sure the Generator is disconnected from the power source. This is to eliminate the possiblity of electrical shock.*

**CAUTION**

*In procedures that call for a vacuum cleaner to remove dust, do not use a blower or compressed air. Doing so will cause the dust to be transferred throughout the Generator.*

**Fan, Upper Unit.**

1. At the rear of the Generator, remove two screws and lock washers that secure the fan cover.
2. Remove the fan cover.
3. Using a vacuum cleaner and a soft-bristle brush, remove dust from the fan and its cover.
4. Replace the fan cover.

**Vents, Upper Unit.**

1. Locate the ventilation holes at the rear of the Generator (in the lower right corner as viewed from the rear).
2. Using a vacuum cleaner and a soft-bristle brush, remove dust from the ventilation holes.

**Power Supply Filter Capacitors, Upper Unit.**

1. Inside the Generator, locate the power supply filter capacitor area (just forward and to the right of the fan as viewed from the rear).
2. Using a vacuum cleaner and a soft-bristle brush, remove dust from the entire area.

**Area in Front of Fan, Upper Unit.**

1. Locate the hinged plastic cover just forward of the fan.
2. Raise the plastic cover into its upright position.
3. Using the plastic-loop pc board extractors, remove all of the boards.

**NOTE**

*As you remove each board, locate its silkscreened reference designation. (The reference designations are A3A3, A3A4,*



www.valuetronics.com

**6-Month Cleaning (cont'd)**

**NOTE (cont'd)**

*A3A5, A3A6, and A3A7.) When you return the boards, you can identify the proper slot by matching reference designations on the pc board, the mother board, and the plastic cover.*

4. Using a vacuum cleaner and a soft-bristle brush, remove dust from the fan and the entire area forward of it.

5. Using a vacuum cleaner and a soft-bristle brush, remove dust from each of the pc boards.

CAUTION

*In the next step, do not let the cleaning solution touch circuit portions of the pc board. This could cause residual flux on solder connections to liquify and contaminate the edge connectors.*

6. Using a lint-free cloth saturated with cleaning solution, rub each pc board edge connector 3 or 4 times to remove any foreign material.

7. Rinse the pc board edge connectors with deionized water and wipe them dry.

**NOTE**

*Before returning the pc boards to their their normal places, it is a good idea to inspect them for heat damage. The pc boards that are mounted directly in front of the fan, produce relatively high amounts of heat. Heat discoloration of the pc board material can be a sign that the fan is not working properly.*

8. Carefully insert the pc boards into their guides and mother board connectors. (The component side of each pc board faces right when viewed from the rear of the Generator.)

9. Lower the hinged plastic cover into its normal position.

**Fan, Lower Unit.**

1. Turn the instrument over (up-side-down). Remove the bottom cover following the procedure outlined for Top Cover Removal and Replacement.

2. At the rear of the Generator, remove four screws and lock washers that secure the fan cover.

3. Remove the fan cover.

4. Using a vacuum cleaner and a soft-bristle brush, remove dust from the fan and its cover.

5. Replace the fan cover.

**Vents, Lower Unit.**

1. Locate the ventilation holes at the rear of the Generator (in the lower right corner as viewed from the rear).

2. Using a vacuum cleaner and a soft-bristle brush, remove dust from the ventilation holes.

**Power Supply Filter Capacitors, Lower Unit.**

1. Inside the Generator, locate the power supply filter capacitor area (just forward and to the right of the fan as viewed from the rear).

2. Using a vacuum cleaner and a soft-bristle brush, remove dust from the entire area.

3. Replace the bottom cover, following the procedure outlined for Top Cover Removal and Replacement.

## 8-45. 12-Month Cleaning

WARNING

*Before cleaning, make sure the Generator is disconnected from the power source. This is to eliminate the possibility of electrical shock.*

CAUTION

*In procedures that call for a vacuum cleaner to remove dust, do not use a blower or compressed air. Doing so will cause the dust to be transferred throughout the Generator.*

**A2 Digital Control Unit (DCU) Area.**

1. Just forward and to the left of the fan (as viewed from the rear), locate the long aluminum cover over the A2 DCU assembly.

2. Remove the screw and lock washer located at the rear of the cover.



www.valuetronics.com

**12-Month Cleaning (cont'd)**

3. Remove the cover by sliding it to the rear and up.

**NOTE**

*Before removing any pc board, notice that each board in the DCU has a unique set of color coded plastic extractors. At the forward end, these extractors match the colors of the guides on the aluminum frame. At the rear, the first four extractors are black; the fifth extractor, on the A2A11 ROM Assembly, is brown.*

4. Remove all five pc boards. To remove each board, grasp both of its extractors. Then, by pulling up on the extractors, the board will gently pry itself from its mother board connectors.

CAUTION

*In the next step, do not use a vacuum cleaner to remove dust from the A2 Assembly pc boards. The boards have static sensitive devices that can be damaged by a vacuum cleaner.*

5. Using a soft-bristle brush only, remove dust from the pc boards.

6. Using a vacuum cleaner and a soft-bristle brush, remove dust from the entire DCU area (especially from the mother board connectors).

CAUTION

*In the next step, do not let the cleaning solution touch circuit portions of the pc board. This could cause residual flux on solder connections to liquify and contaminate the edge connectors.*

7. Using a lint-free cloth saturated with cleaning solution, rub each pc board edge connector 3 or 4 times to remove any foreign material.

8. Rinse the pc board edge connectors with deionized water and wipe them dry.

CAUTION

*The next step requires care to ensure that pc board edge connectors are properly aligned with the mother board connectors. When properly aligned, the pc board will press snuggly into the mother board connectors. However, if they are not properly aligned, pressure on the pc board can damage the mother board and its connector.*

9. Carefully insert the pc boards into their guides and mother board connectors. Ensure that the front extractors match the colors on their plastic guides.

10. Install the DCU cover by tilting its front-end down and into the locking slots provided for the cover's front tabs. Then, lower the cover into place and secure it with its screw and lock washer.

**Battery, Contacts.**

1. Locate the battery pack in the general area of the forward-right corner of the Generator (as viewed from the front).

2. Remove pc boards A2A1 and A2A2. To remove each board, grasp both of its extractors. Then, by pulling up on the extractors, the board will gently pry itself from its mother board connector(s).

3. With your fingers, remove the spring retaining clip that holds the battery pack in its plastic holder.

CAUTION

*In the next two steps, be careful not to bend the spring-contacts in the battery holder.*

4. Using a lint-free cloth saturated with cleaning solution, rub each contact on the battery pack and holder 3 or 4 times to remove any foreign matter.

5. Using a lint-free cloth saturated with deionized water, rinse the contacts. Then wipe them dry.

6. Position the battery pack so that its contacts are on the right side and facing to the rear. Place the battery pack into its holder.

**NOTE**

*The next step refers to the top and bottom of the spring retaining clip. The bottom of the clip is identified by a single bend of metal; the top is identified by a double bend.*



www.valuetronics.com

**12-Months Cleaning (cont'd)**

7. Slip the bottom end of the spring retaining clip under the bottom lip of the plastic battery holder. Snap the top end of the clip over the top of the holder.

CAUTION

*In the next step, do not let the cleaning solution touch circuit portions of the pc board. This could cause residual flux on solder connections to liquify and contaminate the edge connectors.*

8. Using a lint-free cloth saturated with cleaning solution, rub each pc board edge connector 3 or 4 times to remove any foreign material.
9. Rinse the pc board edge connectors with deionized water and wipe them dry.
10. Carefully insert the pc boards into their guides and mother board connectors. Ensure that the extractors match the colors of their plastic guides.

## 8-46. SCHEMATIC SYMBOLOGY

### 8-47. Basic Logic Symbology

The logic symbols used in this manual are based on the American National Standards Institute (ANSI) Y32.14-1973, "Graphic Symbols for Logic Diagrams (Two State Devices)." A summary of this symbology is provided to aid in interpreting these symbols.

Power supply and ground connections are not shown on the symbols. This information is tabulated on the right margins of the service sheets.

**Gates and Qualifiers.** This section includes a brief description of the basic logic symbols used on the service sheets, a summary of indicator symbols, a discussion of contiguous blocks, control blocks, and dependency notation, and a summary of symbology for some of the more complex devices.

Qualifiers are that portion of a device symbol that denotes the logic function. For example, "&" denotes the AND function. See Figure 8-5 for a summary of the basic logic symbols and their qualifiers.

**Indicator Symbols.** Indicator symbols identify the active state of a device's input or output, as shown in Figure 8-6.

**Contiguous Blocks.** Two symbols may share a common boundary, parallel or perpendicular to the direction of the signal flow. Note that in the examples shown in Figure 8-7, there is generally no logic connection across a horizontal line, but there is always an implied logic connection across a vertical line. Notable exceptions to this rule are the horizontal lines beneath control blocks and between sections of shift registers and counters (dividers).

**Dependency Notation.** Dependency notation simplifies symbols for complex integrated circuit elements by defining the relationship between inputs and outputs without actually showing all the elements and connections involved (see Figures 8-8 through 8-10). The following examples use the letter A for address, C for control, G for AND, V for OR, and F for free dependencies. The dependent input or output is labeled with a number that is either prefixed (e.g.,1X) or subscripted (e.g.,$X_1$). They both mean the same thing. Note that many times a controlled line may already be labeled with a number that indicates input or output weighting (for example, in a coder). In this case, the controlling or gating input will be labeled with a letter.

**Common Control Block.** The control block is used in conjunction with an array of related symbols in order to group common logic lines. Figure 8-11 shows how the control block is usually represented. Figure 8-12 shows a quad D-type flip-flop with reset. This can be redrawn as shown in Figure 8-13. Note that the representation shown in Figure 8-13 can be used when the flip-flops are functionally scattered around the schematic (i.e., not used as a quad unit).

### 8-48. Complex Device Symbology

Figures for complex device symbology show how the basic symbols can be combined to illustrate the behavior of fairly complex devices.

**Shift Register.** The shift register (see Figure 8-14) control block shows common inputs to a bidirectional shift register. Notice that ">m" means shift the contents to the right or down by "m" units. And "<m" means shift the contents to the left or up by "m" units. Note: If m=1, then "m" may be omitted. Inputs "a" and "b" are each single IC pins that have two functions. Input "a" enables one of the inputs to the top D-type flip-flop (1D) and also shifts the register contents down "m" units. Input "b" enables one of the inputs to the



www.valuetronics.com

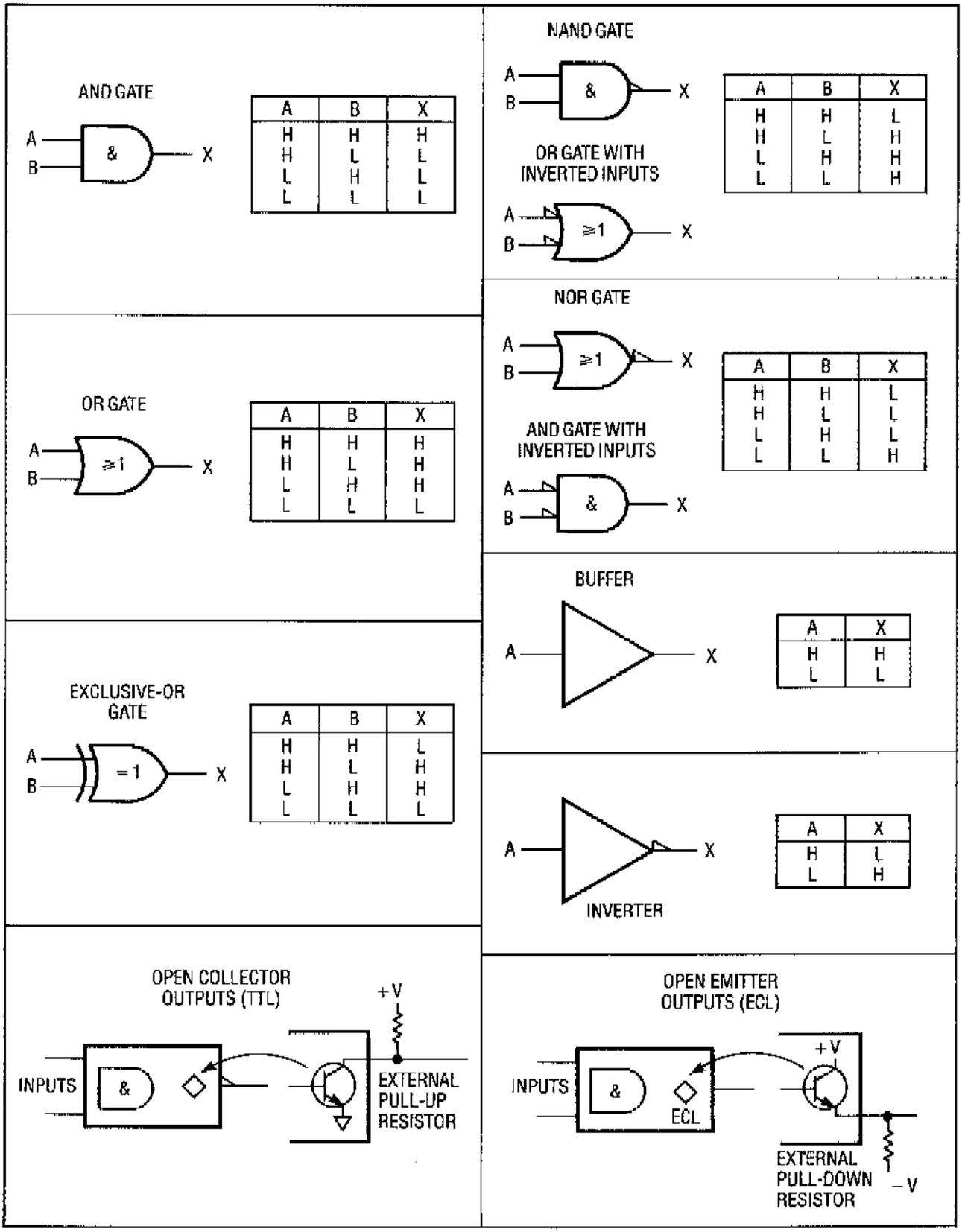


**Figure 8-5. Basic Logic Symbols and Qualifiers**



www.valuetronics.com

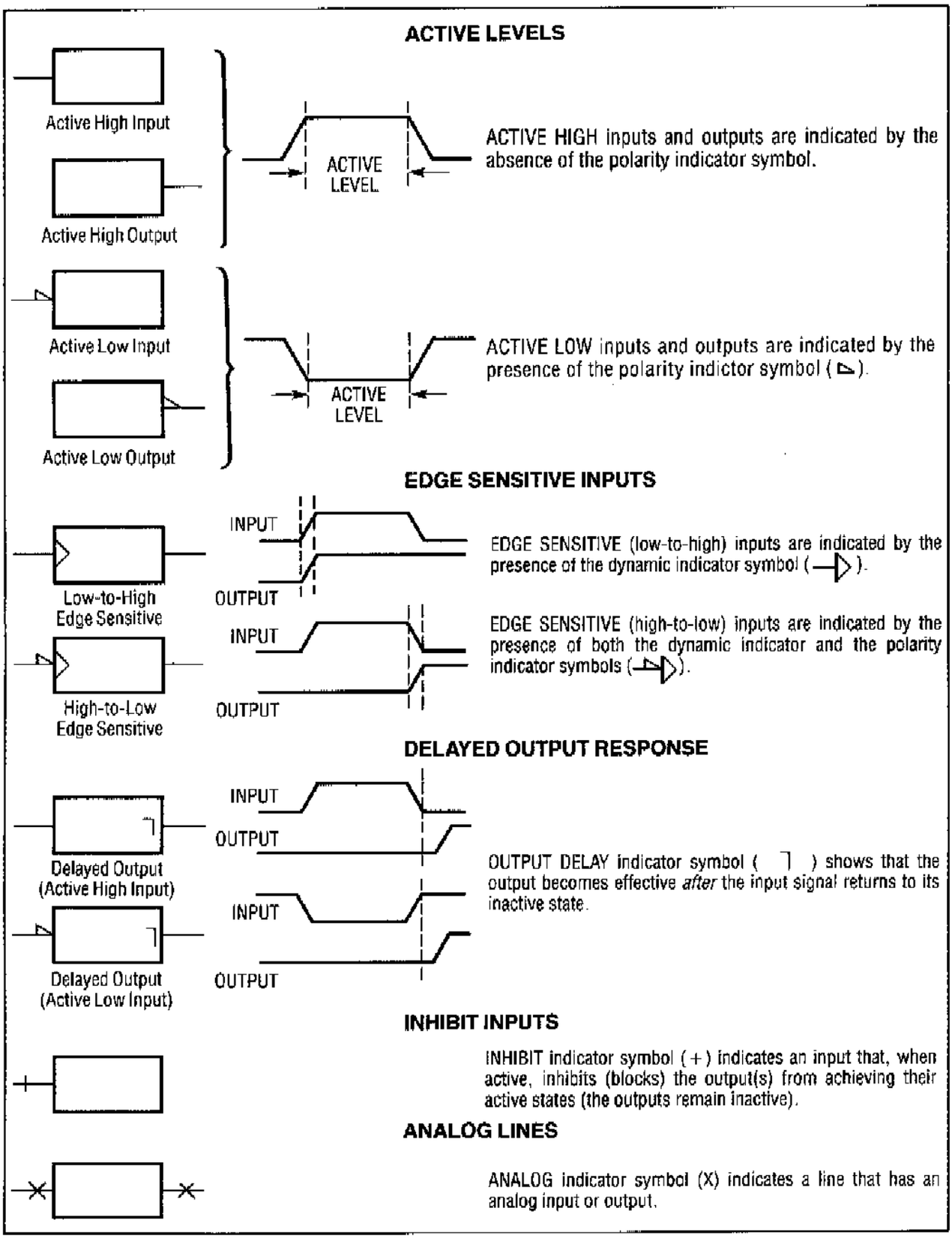


**Figure 8-6. Indicator Symbols**



www.valuetronics.com

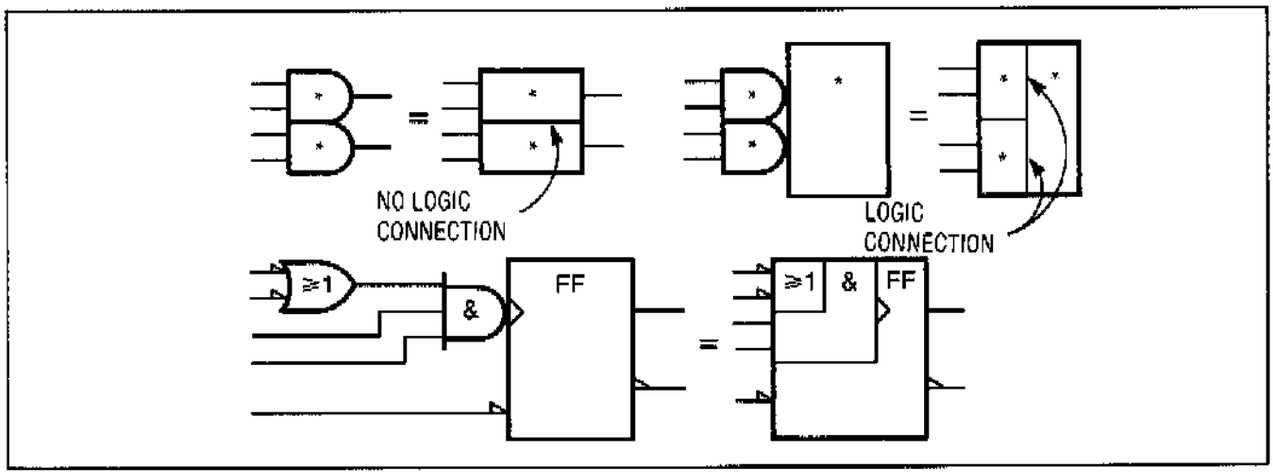


**Figure 8-7. Contiguous Blocks**

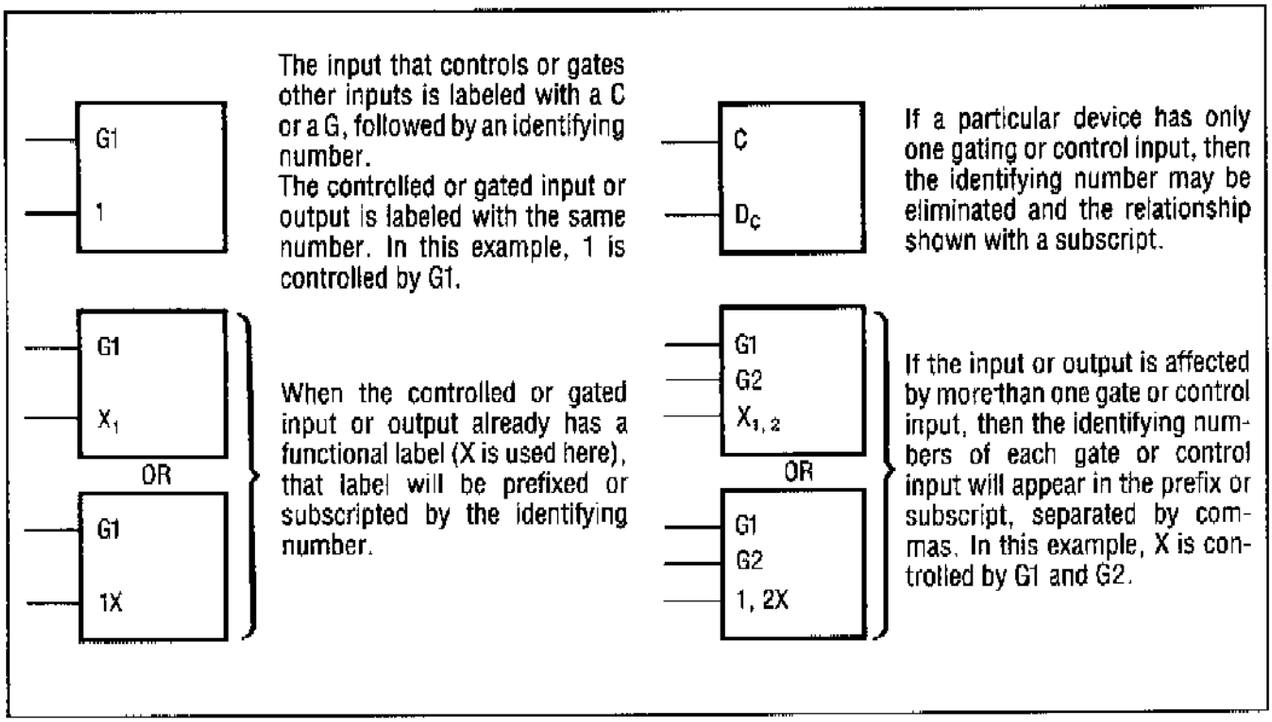


**Figure 8-8. AND Dependency Notation**

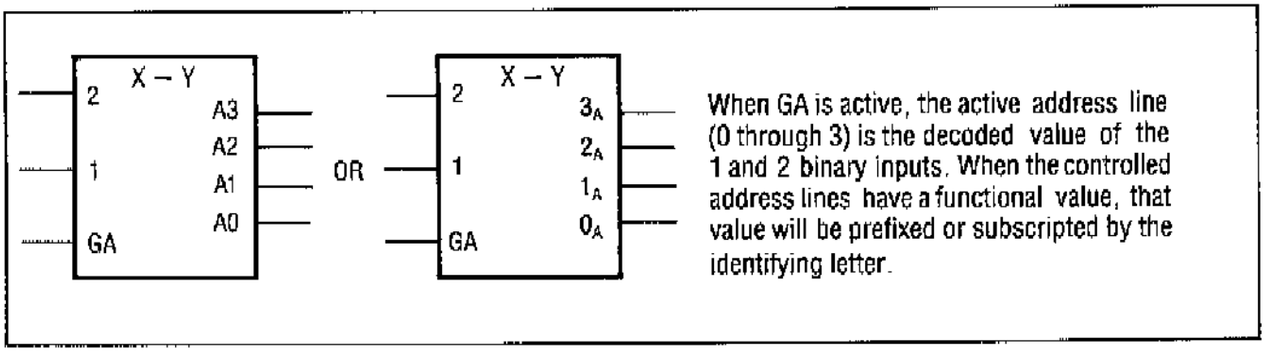


**Figure 8-9. Address Dependency Notation**



www.valuetronics.com

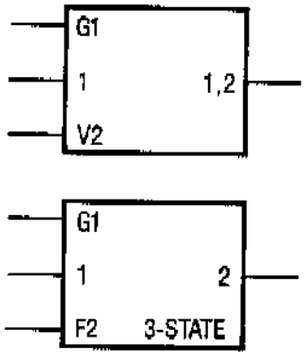


When a V input is active, the output will be in its active state. With the V input inactive, the device functions as if the V input doesn't exist.

When an F input is active, the output is enabled to function normally. When an F input is inactive, the output becomes a high impedance, effectively removing that device from the circuit.

The 3-STATE label is sometimes used with the free dependency notation.

**Figure 8-10. OR and Free Dependency Notation**

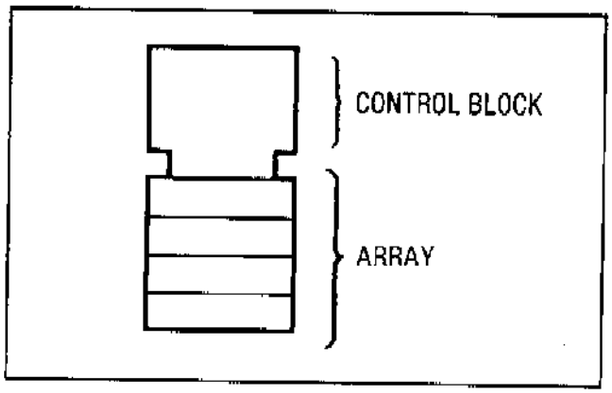


**Figure 8-11. Common Control Block**

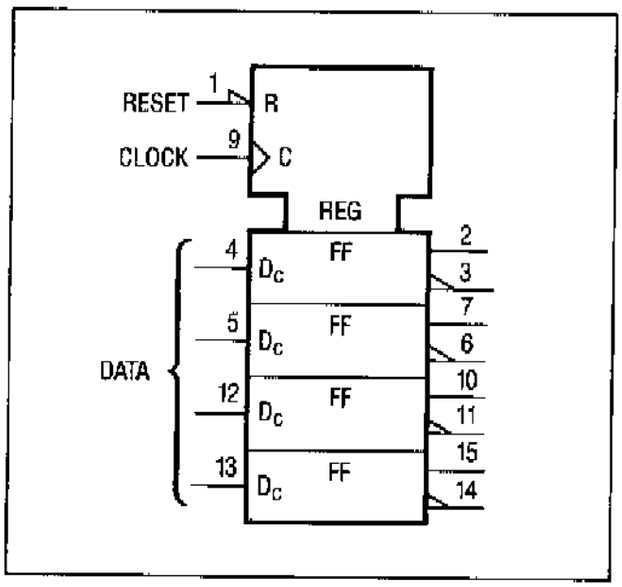


**Figure 8-12. Quad D-Type Latch (Combined)**

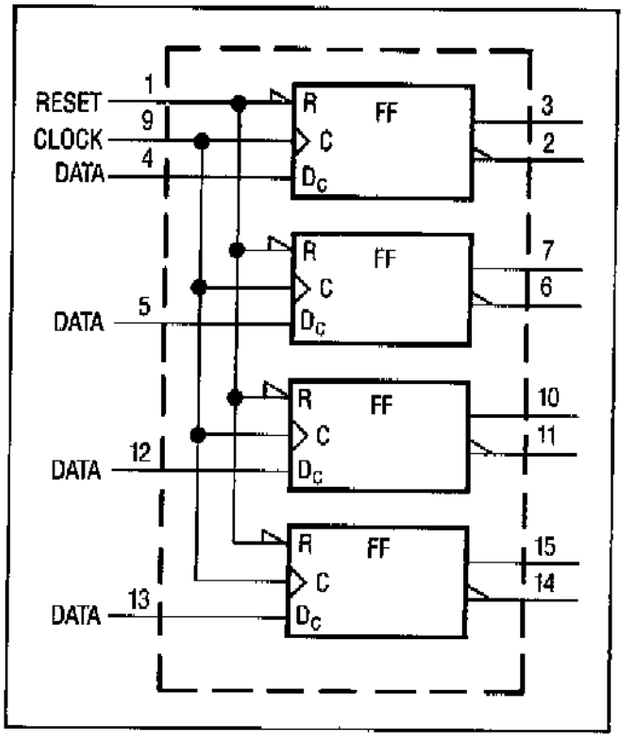


**Figure 8-13. Quad D-Type Latch (Individual)**

## Complex Device Symbology (cont'd)

bottom flip-flop (2D), and also shifts the register contents up "m" units. Input "c" loads all four flip-flops in parallel (3D). Input "d" is a common reset. The output delay indicator is used because these are master-slave flip-flops.

**AND-OR Selector.** The selector control block simplifies the AND portion of a quad AND-OR select



www.valuetronics.com

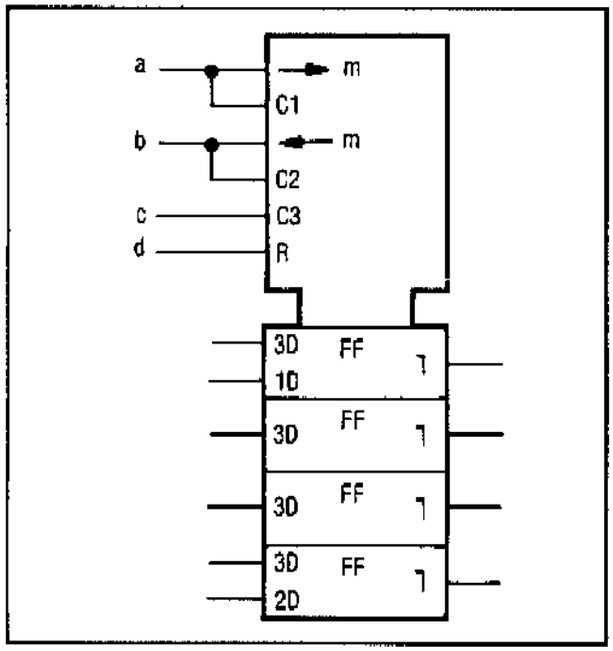


Figure 8-14. Shift Register

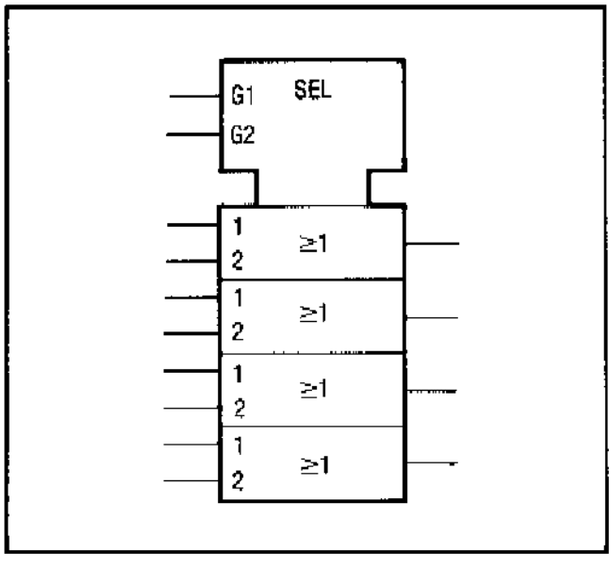


Figure 8-15. AND-OR Selector

gate (see Figure 8-15). When G1 is high, the data presented at the "1" inputs is gated through. When G2 is high, the data presented at the "2" inputs is gated through.

**UP-DOWN Counter.** The counter control block shows common inputs to a Presettable Decade UP-DOWN Counter (see Figure 8-16). Notice that "+m" means count up (increment the count) by "m"; "-m" means count down by "m." Note: if m=1, then "m" may be omitted. Since the D-type flip-flops are master-slave, the output delay indicator is used. The "=9, +1" and "=0, -1" notation defines when the carry and borrow outputs are generated. They also define it as a decade counter; a binary counter would have the carry indicated with "=15, +1." Flip-flop weighting is indicated in parentheses. Input "C1" allows all four "D1" flip-flops to be preset in parallel.

**Quad D-Type Latch.** The register control block illustrates a quad D-type latch (see Figure 8-17). There is a common active-low reset (R), and a common edge triggered control input (C). Since there is only one dependency relationship, the controlling input is not numbered and the controlled functions (D) are subscripted with a C.



www.valuetronics.com

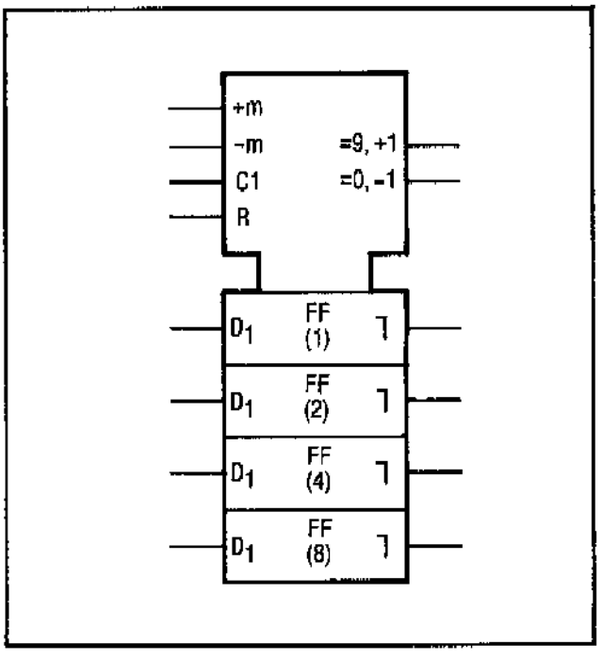


Figure 8-16. UP-DOWN Counter

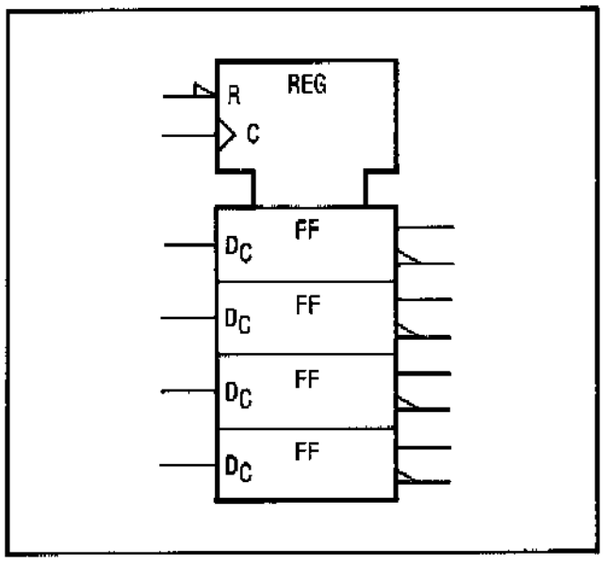


Figure 8-17. Quad D-Type Latch



www.valuetronics.com

Service Shts BD1- BD9

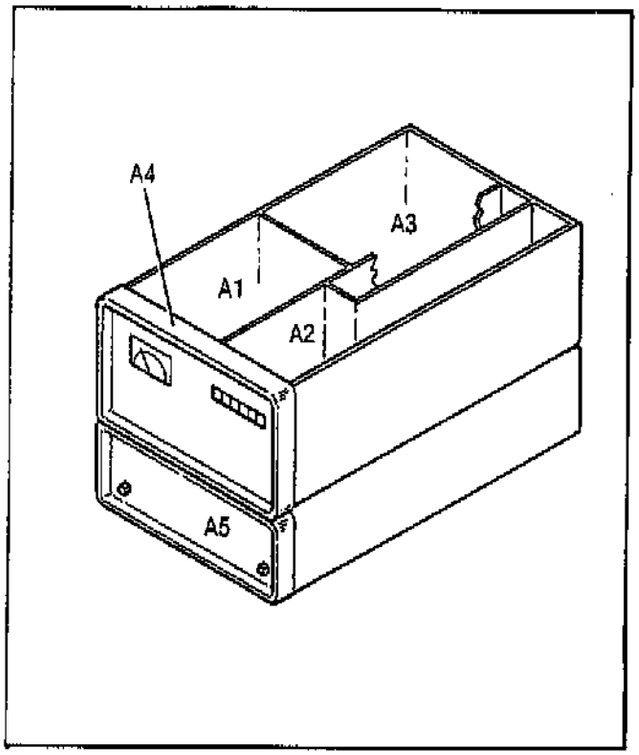


**Major Assemblies**

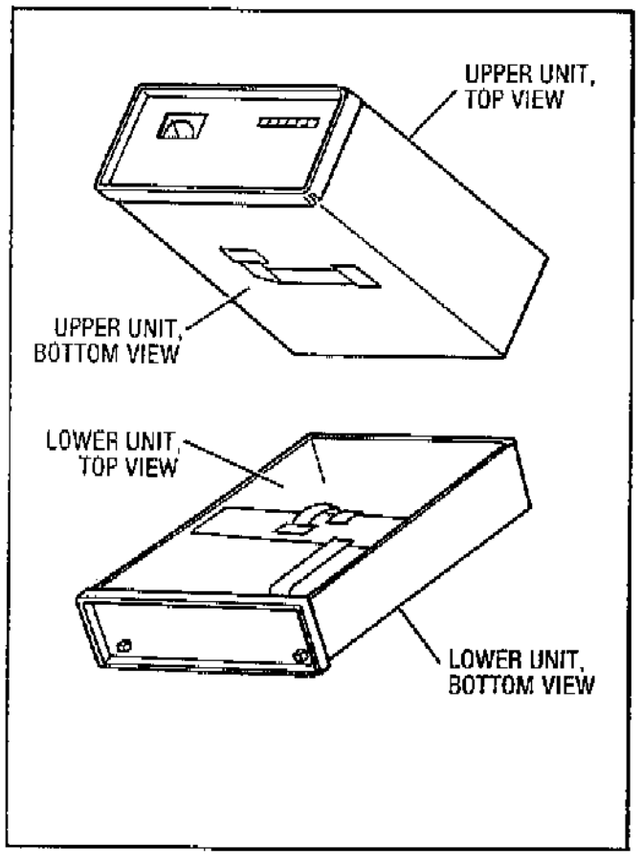


**Internal View Identification**

## Assemblies vs. Service Sheet List

| Assembly | Description | Ser.Sheet |
|---|---|---|
| A1A1 | Attenuator Driver Board Assembly | 18 |
| A1A2 | Detector Module Assembly | 14,17 |
| A1A2A1 | ALC Board Assembly | 14,17 |
| A1A2A2 | Detector Board Assembly | 17 |
| A1A3 | Function Board Assembly | 20 |
| A1A4 | Pulse Driver Board Assembly | 15 |
| A1A5 | DAC and Enable Board Assembly | 22 |
| A1A6 | Meter Board Assembly | 20,40 |
| A1A7 | YTM Driver Board Assembly | 16 |
| A1A8 | SRD Bias Board Assembly | 19 |
| A1A9 | Preamp Assembly | 14,16 |
| A1A10 | YTM Assembly | 16 |
| A1A10A1 | YIG Heater Control Assembly | 16 |
| A1A11 | Power Amplifier Assembly | 16 |
| A1A12 | Motherboard Assembly | 14-16,18-22, 30,31,40 |
| A1A13 | Terminal Strip | 37 |
| A1A14 | Amp Bias Board Assembly | 17 |
| A2A1 | Panel Driver Board Assembly | 25 |
| A2A2 | Key Code Board Assembly | 24 |
| A2A3 | VCO Assembly | 8 |
| A2A4 | Phase Detector Assembly | 7 |
| A2A5 | Divider Assembly 20/30 | 6 |
| A2A6 | Not Assigned | |
| A2A7 | I/O Board Assembly | 30,31 |
| A2A8 | Microprocessor Board Assembly | 26 |
| A2A9 | Frequency/HP-IB Board Assembly | 29 |
| A2A10 | RAM Board Assembly | 28 |
| A2A11 | ROM Board Assembly | 27 |
| A2A13 | Motherboard Assembly | 6-8,10, 20-32 |
| A2A14 | Rear Interconnect Board Assembly | 24,29, 31 |
| A2A15 | HP-IB Connector Board Assembly | 29 |
| A3A1 | Rectifier Assembly | 33 |
| A3A1A1 | Reference Phase Detector Assembly | 1,2 |
| A3A1A2 | 100 MHz VCXO Assembly | 2 |
| A3A1A3 | M/N Phase Detector Assembly | 3 |
| A3A1A4 | M/N VCO Assembly | 4 |
| A3A1A4A1 | VCO Resonator | 4 |
| A3A1A4A2 | VCO Board Assembly | 4 |
| A3A1A5 | M/N Output Assembly | 5 |
| A3A1A6 | M/N Reference Motherboard Assembly | 1-3,5 |
| A3A1A7 | Reference Housing Assembly | |
| A3A2 | Not Assigned | |
| A3A3 | Positive Regulator Assembly | 34 |
| A3A4 | Negative Regulator Assembly | 35 |
| A3A5 | DAC Assembly | 9 |
| A3A6 | YTO Driver Assembly | 10 |
| A3A7 | FM Driver Assembly | 13 |
| A3A8 | 10 MHz Reference Oscillator | 1 |
| A3A9 | YTO Loop Assembly | 11,12 |
| A3A9A1 | Directional Coupler Assembly | 13 |
| A3A9A2 | YTO Interconnect Assembly | 11-13 |
| A3A9A3 | 2.0 - 6.6 GHz YTO Assembly | 13 |
| A3A9A4 | YTO Phase Detector Assembly | 12 |
| A3A9A5 | Sampler Assembly | 11 |
| A3A9A6 | Attenuator Assembly | 13 |
| A3A9A7 | 6.2 GHz Low Pass Filter | 13 |
| A3A10 | Motherboard Assembly | 1,3,8,10, 12-14,21-23 26, 29-31, 33-35 |
| A4A1 | Front Panel Board Assembly | 20,22, 28,32,40 |
| A5A1 | Front Panel Board Assembly | 41,42,44 |
| A5A2 | Detector Module Assembly | 36,39 |
| A5A2A1 | ALC Board Assembly | 36,39 |
| A5A2A2 | Detector Board Assembly | 39 |
| A5A3 | Function Board Assembly | 42 |
| A5A4 | Pulse Driver Board Assembly | 37 |
| A5A5 | DAC and Enable Board Assembly | 44 |
| A5A6 | Switch Driver Board Assembly | 36,41 |
| A5A7 | YTM Driver Board Assembly | 38 |
| A5A8 | Motherboard Assembly | 36-38,40-44, 46,47 |
| A5A9 | Microprocessor Board Assembly | 43 |
| A5A10 | Power Supply Board Assembly | 45-47 |
| A5A11 | Regulator 2 Board Assembly | 46 |
| A5A12 | Regulator 1 Board Assembly | 46,47 |
| A5A13 | Pulse Input Assembly | 37 |
| A5A13A1 | Pulse Input Switch Board Assembly | 37 |

www.valuetronics.com

## BLOCK DIAGRAM 1
## OVERALL BLOCK DIAGRAM AND TROUBLESHOOTING

### REFERENCES

- Servicing Strategy ..... Beginning of Section VIII
- Operator's Checks ..... Section III
- Disassembly Procedures .... Service Sheets A & B
- Illustrated Parts Breakdown (IPB) ..... Section VI
- Post Repair Adjustments ..... Section V

### PRINCIPLES OF OPERATION

#### Major Mechanical Assemblies

The HP 8673C/D Signal Generator consists of five major mechanical assemblies as listed below:

- A1 RF Output Assembly
- A2 Controller Assembly
- A3 RF Source Assembly
- A4 Front Panel Assembly
- A5 Downconverter Assembly

These assemblies are shown in Figure 8-18 with their associated subsystems. Each is discussed briefly below:

**A1 RF Output Assembly.** This assembly multiplies the output of the RF Source Assembly, amplifies it, and provides the selected output attenuation. Automatic Leveling Control (ALC), AM and pulse modulation take place in this assembly. A switch is also included that automatically routes the output of the RF Source Assembly to the downconverter circuits in the Downconverter Assembly any time a frequency below 2 GHz is selected. The subsystems of the RF Ouput Assembly are:

- Microwave Signal Path Circuits
- ALC/AM Circuits
- Pulse Modulation Circuits

**A2 Controller Assembly.** This assembly contains the Digital Control Unit (DCU) that controls the entire operation of the Signal Generator. It also contains part of the RF Phase Locked Loops subsystem.

**A3 RF Source Assembly.** This Assembly generates all the reference frequencies used in the Signal Generator. It uses some of these reference signals plus control signals from the DCU to generate the baseband signal of 2.0—6.6 GHz. This baseband signal is applied to the RF Output Assembly. The RF Source Assembly also handles frequency modulation. Subsystems are:

- Time Base Reference
- Part of the RF Phase Lock Loops
- YIG Tuned Oscillator (YTO)

**A4 Front Panel Assembly.** This assembly is the user interface to the HP 8673C/D. It contains the keys, indicators, and annunciators that are connected to the DCU.

**A5 Downconverter Assembly.** This assembly generates the frequencies from 0.05—2 GHz. Besides the downconverter, it contains its own DCU which communicates with the DCU in the A2 Assembly. Additionaly it contains a duplication of the ALC, AM, and pulse modulation circuits in the A1 assembly, plus switchable filters used in bands 1 through 4.

#### Functional Description

Functionally, the HP 8673C/D can be divided into eight electrical subsystems. These are listed below with the physical assemblies of which they are a part:

- Time Base Reference A3
- RF Phase Locked Loops A2 and A3
- YIG Tuned Oscillator (YTO) Summing Loop A3
- Microwave Signal Path A1 and A5
- Automatic Level Control (ALC) A1 and A5
- Pulse Modulation A1 and A5
- Digital Control Unit A2 and A4
- Power Supplies A3 and A5

These subsystems are illustrated in the simplified block diagram of Figure 8-19, and in the more detailed block diagram of BD1. Each block of BD1 is further expanded in the block diagram indicated in the lower right hand corner of each block on BD1. The following discussion is referenced to Figure 8-19 and to BD1. A more detailed discussion of each block is found with block diagrams BD2—BD9.

**Time Base Reference.** This subsystem generates the reference frequencies for the Signal Generator. It consists of the following:

- 10-MHz Reference Oscillator
- Reference Loop



www.valuetronics.com

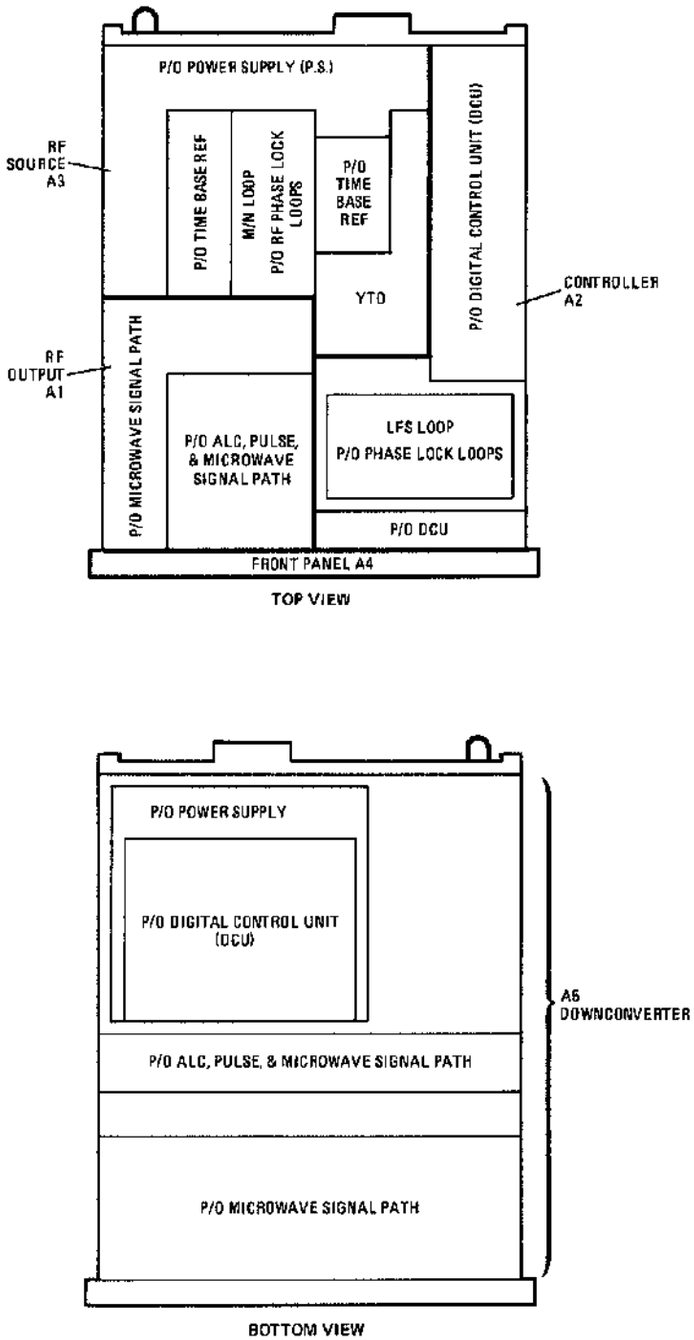


**Figure 8-18. HP 8673C/D Assemblies and Subassemblies**



www.valuetronics.com

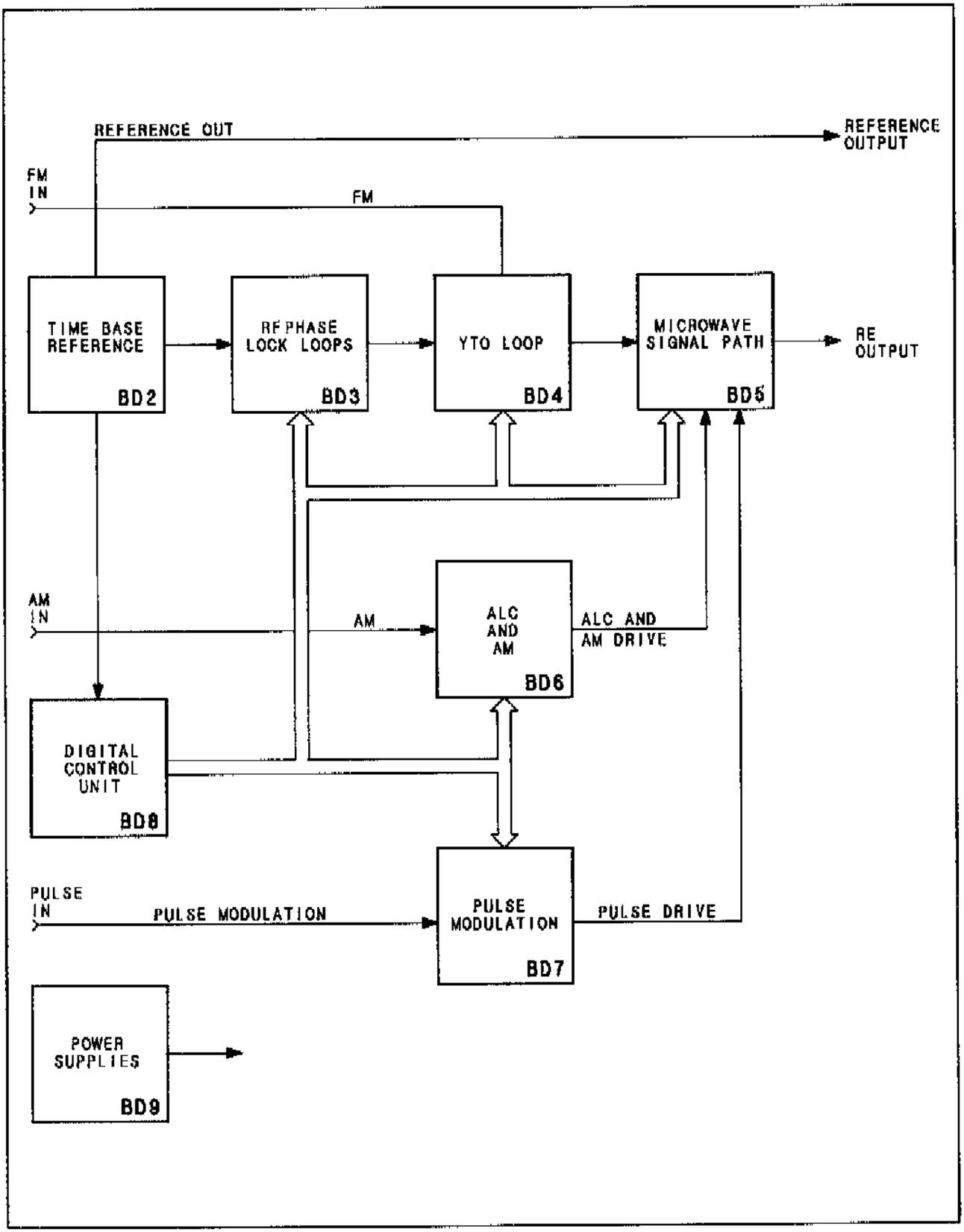


Figure 8-19. HP 8673C/D Simplified Block Diagrams



www.valuetronics.com

## SERVICE SHEET BD1 (cont'd)

### Functional Decription (cont'd)

The 10-MHz Reference Oscillator is a temperature controlled, crystal oscillator that generates the basic 10-MHz reference signal. Provision is also made for use of an external 5 or 10 MHz reference signal. The Reference Loop also contains a 100-MHz voltage-controlled crystal oscillator (VCXO) that is phase locked to the internal 10-MHz Reference Oscillator, or to an external 5 or 10 MHz reference.

In the Reference Loop, the 100 MHz signal from the VCXO is divided and multiplied to produce reference frequencies for the RF Phase Locked Loops, the 4.2 GHz phase locked oscillator (in the Downconverter) and for the DCU. A 10-MHz reference signal is also available at a rear-panel BNC connector.

**RF Phase Locked Loops.** These loops are phase locked to the Timebase Reference. Under control of the Digital Control Unit (DCU), they generate the signals that control the YIG Tuned Oscillator (YTO) Summing Loop. The RF Phase Locked Loops subsystem contains the following:

- Low Frequency Source (LFS) Loop
- M/N Loop

The LFS Loop generates a 20—30 MHz control signal. This signal is controlled by the DCU to tune the YTO in 1-kHz steps. This controls the least significant four digits in the front panel FREQUENCY MHz display. The M/N Loop generates a 177—197.5 MHz control signal that is controlled by the DCU to tune the YTO in 10-MHz steps. This controls the 10-MHz and higher digits of the front panel FREQUENCY MHz display. The Phase Locked Loops subsystem is located in RF Source Assembly A3 (M/N Loop), and Controller Assembly A2 (LFS Loop).

**YIG Tuned Oscillator (YTO) Summing Loop.** This subsystem generates the baseband or Band 1 frequencies (2—6.6 GHz.) under control of the DCU, and signals from the RF Phase Locked Loops subsystem.

The YTO Summing Loop consists of the YTO Loop and a Digital-to-Analog Converter (DAC). The DAC, under control of digital signals from the DCU, pretunes the YTO to within ±50 MHz of the desired YTO frequency. For fine tuning to the desired frequency, the YTO loop is phase locked to the 20—30 MHz and 177—197.5 MHz outputs of the LFS and M/N loops. Frequency modulation (FM) also takes place in the YTO Summing Loop. The YTO subsystem is located in RF Source Assembly A3.

**Microwave Signal Path.** This subsystem receives the baseband frequencies from the YTO Summing Loop and, under DCU control, multiplies or down-converts this signal as necessary to generate the final desired output frequency. The Microwave Signal Path also performs the following functions:

- Automatic Level Control
- AM and pulse modulation
- Filtering
- Amplification
- Attenuation

For Automatic Level Control, the Microwave Signal path output is sampled, detected and routed to the Automatic Level Control (ALC) subassembly which sends a signal to the ALC modulator (in the Microwave Signal Path) to control signal level. Amplitude modulation also comes from the ALC subassembly. The pulse modulation signal comes from the Pulse Modulation subassembly.

Filtering of the microwave signal is under control of the DCU which switches in different filters depending on the band selected. The filters may be manually bypassed using the front panel NORMAL/BYPASS switch, however, the DCU switches the Signal Generator to NORMAL mode any time a low band frequency (0.05—2 GHz) is selected. A K-band amplifier is used for frequencies between 16 and 26 GHz in the HP 8673D only. This amplifier is automatically switched in or out, as required, by the DCU.

The DCU also controls the output attenuation based on the front panel RANGE inputs. The Low band (0.05—2 GHz) signal has its own ALC/AM and pulse modulation circuits. These are located in the Downconverter Assembly A5. The Microwave Signal Path is located in RF Output Assembly A1 and in Downconverter Assembly A5.

**Automatic Level Control.** This subassembly has two functions:

- Leveling the Signal Generator output
- Amplitude modulating the Signal Generator Output

Separate but identical circuitry is used for the high bands and the low band.



www.valuetronics.com

## SERVICE SHEET BD1 (cont'd)

To level the signal, the ALC monitors the output level, either from the internal coupler and detector or from an external reference. If the level starts to change, the ALC changes the drive to the ALC modulator in the Microwave Signal Path to counteract the change, and the level stays nearly constant. The front panel VERNIER control adjusts the ALC level to adjust the output level within a 13 dB range.

The AM input is added directly to the ALC/AM modulator drive signal after passing through correction circuitry in the ALC subsystem. A DCU controlled switch routes the EXT ALC and AM inputs to the high bands or low band circuits, as appropriate. The ALC subsystem is located in RF Output Assembly A1 and in Downconverter Assembly A5.

**Pulse Modulation.** This subsystem includes control circuits for the high bands and the low band. Both use the same PULSE IN input signal. A DCU controlled switch routes the pulse modulation inputs to the high bands or low band circuitry, as appropriate. This subsystem is located in RF Output Assembly A1 and Downconverter Assembly A5.

**Digital Control Unit.** This is the brain of the Signal Generator. It receives data from the front panel keys (local mode) or from HP-IB (remote mode). After receiving the input data, the DCU processes it and sends it to the various assemblies to control frequency, power level, modulation levels and modes, and other operating modes. The controller also runs diagnostics and monitors operating conditions. If a problem is detected, the controller activates the appropriate annunciators on the front panel. The Digital Control Unit subsystem is located in Controller Assembly A2 and in Downconverter Assembly A5.

**Power Supplies.** The Signal Generator contains negative and positive voltage regulators that provide the DC voltages required for operation. The +22V regulator is turned on whenever main power is applied to the Signal Generator. The remaining regulators are not turned on until the Front Panel LINE switches are set to ON. The power supplies are located in both RF Source Assembly A3 and Downconverter Assembly A5.

## TROUBLESHOOTING PROCEDURES

### General

If the instrument is not operating properly in the local mode, use the following Overall Level Procedure to isolate the problem to one of the eight subsystems. The appropriate Functional Level Procedures (associated with BD2—BD9) and Circuit Level Procedures (associated with Service Sheets 1—47) should then be followed to isolate the problem to the defective assembly within the subsystem, and then to the defective component within the defective assembly.

Once the defective component has been replaced, run the Overall Level Procedure again to check for other possible defects.

When the Overall Level Procedure can be run with no failures, run the Operation Verification procedures in Volume 1, Section IV, Part 1 before putting the unit back into service.

### Overall Level Procedure

The Overall Level Procedure consists of the following:

1. Turn-On Check ✓1
2. Power Supply Checks ✓2
3. Front Panel Checks ✓3
4. Baseband (2—6.6 GHZ) Checks ✓4 ✓5 and ✓6
   a. YTO Frequency Check ✓4
      Reference Loop Check ✓4a
      LFS Loop Check ✓4b
      M/N Loop Check ✓4c
   b. YTO Power Check ✓5
   c. YTO FM Check ✓6
5. Output Level Check ✓7
6. ALC/AM Check ✓8
7. Pulse Modulation Check ✓9

These checks should be run in sequence because each step assumes that previous steps have been run with no errors. Also, because of the interrelationship of the various elements of the Signal Generator, it is difficult to determine which element is at fault without running the checks in order.



www.valuetronics.com

**SERVICE SHEET BD1 (cont'd)**

**Equipment**

| | |
|---|---|
| Frequency Counter | HP 5343A |
| Spectrum Analyzer | HP 8566A |
| Test Oscillator | HP 3335A |
| Digital Voltmeter | HP 3456A |
| Power Meter | HP 436A |
| Oscilloscope | HP 1980B |
| Controller | HP 85B (with ROMs specified in Table 1-3) |
| Adjustment Cassette | HP P/N 11726-10004 |

**Turn-On Check** (VT)

1. Set upper LINE switch to STBY. Set lower LINE switch to OFF. Remove all external cables from the front and rear panels of the Signal Generator, including the primary power cables.

2. Set the rear panel FREQ STANDARD INT/EXT switch to INT and connect the short jumper (A3W3) between A3J9 and A3J10. Connect the long jumper (W60) between A3J7 (100 MHZ OUT) and (A5J1) 100 MHZ REF INPUT.

3. After the primary power cables have been disconnected from the signal generator for at least one minute, reconnect them, and check for the following indications:

   - Front panel STANDBY annunciator ON
   - Front Panel OVEN COLD annunciator ON
   - Fan OFF.

   All of the above indications are controlled by the +22V supply which is on when the unit is in STANDBY.

   If the above indications are correct, proceed with Step 6. If any of the above indications are incorrect, proceed with with Step 4.

4. Remove the top cover and observe the +22V indicator (see BD1 for location).

   If the +22V indicator is on and the STANDBY and/or OVEN COLD annunciators are OFF, check the associated incandescent bulb and proceed with Step 6.

   If the indicator is off, proceed with Step 5.

5. Observe the Primary "ON" Indicator. (Only the back or terminal side of this LED is visible from the top of the Signal Generator.)

   If this indicator is ON, the +22V regulator is probably defective. Go to BD9 to further isolate the problem.

   If the indicator is off, check that the fuse is not open and that the Voltage Selection Card is properly installed. See Section II, Volume 1.

   **NOTE**

   *An improper voltage selection can cause all supplies to be on, but too low in voltage. This is indicated by very dimly lit front panel displays.*

   If necessary repair or adjustments have been completed, repeat steps 1 through 5.

6. Leave the upper LINE switch set to STBY until the OVEN COLD annunciator turns off. This should occur within 15 minutes or less depending on how long the Signal Generator was disconnected from main power.

   Once the OVEN COLD annunciator turns off, set the upper LINE switch to ON.

   **NOTE**

   *The OVEN COLD annunciator may flicker on and off temporarily just as the oven stabilization temperature is reached. This is normal.*

   The FREQUENCY MHZ display should show a "walking" decimal point (a single decimal point moving from left to right across the display). This indicates that there is no communication between the DCU in Controller Assembly A2 and the DCU in Downconverter Assembly A5.

   Set the lower LINE switch to ON and observe that the walking decimal point display is replaced by a frequency between 0.01 and 26.5 GHz.

   If the walking decimal point display does not appear, or if it does not go away when the lower line switch is set to ON, first check the setting of the Configuration Switch on A2A7. The Table preceeding Table 8-39 gives the settings for the various configurations of the HP 8673. If the Configuration Switch is properly



www.valuetronics.com

**SERVICE SHEET BD1 (cont'd)**

set, proceed with Step 7 to check the power supply voltages. If the voltages check out, go to BD8 to troubleshoot the DCU.

If everything is normal at this point, proceed with Step 7 to confirm proper operating voltages before proceeding with the remaining checks.

### Power Supply Checks ☑2

7. An improper operating voltage can manifest itself in unpredictable ways. Therefore, check the operating voltages before proceeding with the remaining overall level checks. Proceed as follows:

   Remove the top and bottom covers and check the voltages at the following test points. Test point locations are given on BD1.

| Test Point | Voltage |
|---|---|
| BD1 A3A3TP1 | +22±0.2 Vdc |
| BD1 A3A3TP6 | +11±1.1 Vdc |
| BD1 A3A3TP5 | +20±0.002 Vdc |
| BD1 A3A3TP2 | +5.2±0.1 Vdc |
| BD1 A3A4TP5 | −5.2±0.05 Vdc |
| BD1 A3A4TP1 | −40.0+0.6, −1.0 Vdc |
| BD1 A3A4TP4 | −10.0±0.2 Vdc |
| BD1 A5A10TP2 | +28±0.05 Vdc |
| BD1 A5A10TP11 | +20±0.05 Vdc |
| BD1 A5A10TP1 | +15±0.05 Vdc |
| BD1 A5A10TP10 | +5.2±0.05 Vdc |
| BD1 A5A10TP8 | −40±0.05 Vdc |
| BD1 A5A10TP9 | −10±0.05 Vdc |

   If any voltage is incorrect, proceed to Power Supply adjustments in Section V and attempt to adjust the faulty output to the correct voltage.

   If the voltage cannot be adjusted, proceed to BD9 to isolate the power supply fault.

   If any adjustments or repairs are required, repeat this procedure from Step 1 after making the appropriate adjustments or repairs.

   If all voltages are correct, proceed with Step 8.

### Front Panel Checks ☑3

8. Press RCL 0 to initialize the Signal Generator to a known state (see Step 12). Turn the upper line switch to STB then to ON. This ensures that no false errors will occur in the following steps.

9. Observe the MESSAGE key on the Signal Generator front panel.

   If the MESSAGE key is flashing, depress and hold it and read the error message in the FREQUENCY MHz display. This display will be a two-digit Error Message Number. Refer to Table 3-8 for a description of each Error Message Number and action to take for each. If the message key is not flashing, proceed with Step 10.

   **NOTE**

   *Occasionally, transient conditions occur that cause a false error indication. If an error condition occurs, repeat the condition that caused the error. If the error repeats, it is probably a real error.*

   If the message key is on but not flashing, a soft error is indicated, that is, you hit the wrong button. Depress and hold the MESSAGE key as above and refer to Table 3-8 to learn the nature of the problem.

10. Observe the Signal Generator front panel status annunciators.

    If any of the following status annunciators are on, a hardware problem is indicated. Refer to the list of Status Annunciators below and take the indicated action.

    - OVEN COLD
    - ALC UNLEVELED
    - NOT $\phi$ LOCKED

    The remaining Status Annunciators indicate operating modes. See Table 8-4 for a description of all Status Annunciators.

    If no Status Annunciators are on, proceed with Step 11.

    OVEN COLD

    Indicates that the reference oven in the A3 assembly is faulty or is in the warm-up stage. If the Signal Generator has just been connected to the power mains, this annunciator should turn off within 15 minutes. Otherwise, a fault is indicated. Proceed to BD2 to isolate the problem.



www.valuetronics.com

## SERVICE SHEET BD1 (cont'd)

**Table 8-4. Front Panel Status Annunciators**

| Annunciator | | Purpose |
|---|---|---|
| Name | Location | |
| STANDBY | A4 | Indicates that the LINE switch is set to STBY. |
| OVEN COLD | A4 | Monitors the reference oven in the A3 Assembly. Indicates oven temperature is not stable or is in the warm-up stage |
| OUT OF RANGE | A4 | Lights only when a combination of ΔF and FREQUENCY would cause the frequency to be out of range. |
| EXT REFERENCE | A4 | Indicates that the rear panel FREQ REF switch is set to EXT. |
| ALC UNLEVLED | A4 | Indicates that the ALC (leveling) circuit is not providing a leveled output or that an attempt was made to program the instrument to a power level below its range. |
| NOT PHASE LOCKED | A4 | Indicates that one or more of the loops is not phase-locked. Refer to Phase Lock Loop Status Annunciators. |
| FM OVERMOD | A4 | Indicates that the maximum combination of FM index, rate, and deviation has been exceeded. |
| RMT | A4 | Indicates that the instrument is in remote mode. |
| LSN | A4 | Indicates that the instrument is addressed to listen. |
| TLK | A4 | Indicates that the instrument is addressed to talk. |
| SRQ | A4 | Indicates that the instrument is issuing the Require Service Message. |
| BYPASS | A5 | Indicates that the filters and downconverter circuits have been bypassed (automatically switched to NORMAL if a frequency below 2.0 GHz is selected). |
| NORMAL | A5 | Indicates normal (non-bypassed) operation |

ALC UNLEVELED

Indicates that the Automatic Level control circuit is not providing a leveled output. This could be caused by several different problems, including low power output from the YIG Tuned Multiplier (YTM). To isolate the problem, proceed with Step 14 of this procedure.

NOT $\phi$ LOCKED

Indicates that one or more of the phase lock loops in the Signal Generator are not locked. To further isolate the problem, look at the Phase Lock indicators on A2A7. Remember that the phase locked loops are chained together, that is, the YTO loop is phase locked to the outputs of the M/N and LFS loops which are phase locked to the REF loop output. If more than one Phase Lock indicator is off, check the first loop in the chain. For example, if all Phase Lock indicators are off, check the reference loop first.

For REF loop problems go to BD2.

For M/N or LFS loop problems go to BD3.

For YTO problems go to BD4.

11. The front panel should now be set to the following conditions.

RF OUTPUT to ON
ALC INTERNAL to ON
RANGE to −70 dBm (0 dBm for Options 001 and 005)
AUTO PEAK to ON
MTR LVL to ON
AM, FM, and PULSE Modulation to OFF



www.valuetronics.com

**SERVICE SHEET BD1 (cont'd)**

**Front Panel Checks (cont'd)**

FREQUENCY to 3000.000 MHz
FREQ INCR to 1.000 MHz
START to 2000.000 MHz
STOP to 4000.00 MHz
ΔF to 2000.000 MHz
MKRS to OFF (initialized to 3,6,9,12, and 15 GHz)
SWEEP MODE to OFF
STEP to 100 steps (20.000 MHz)
DWELL to 20 ms
TUNE knob to ON
BYPASS/NORMAL to NORMAL

12. Press STO 1 then RCL 1 and observe the MESSAGE key. If the MESSAGE key is flashing, an error is indicated, proceed as directed in Step 9.

The following steps check the two-way communication lines between the Front Panel and the DCU. The first test checks that the DCU can light all the front panel indicators that are controlled by the DCU (all except OVEN COLD and STANDBY). The remaining tests check that the Front Panel keys communicate with the DCU.

13. Set up the front panel light test as follows:

a. Set upper LINE switch to STBY and the lower LINE switch to OFF.

b. Connect the MPU Test Connector (HP Part Number 11726-60001) to the connectors on top of Microprocessor Assembly A2A8.

c. Set the diagnostic switch to "1" and install a shorting clip between A2A8TP5 and A2A8TPGND.

d. Set both LINE switches to ON and verify that all indicators (except BYPASS on the A5 Assembly) and annunciators (except OVEN COLD and STANDBY, these are hardware controlled) are turned on and the displays indicate the following:

RANGE dBm +110
FREQUENCY MHz .1.0.1.0.1.0.1.0.1.0.1

In addition, verify that the AUTO SWEEP key LED is blinking.

If any of the above indications are incorrect, proceed to the troubleshooting procedures associated with BD8 to isolate the problem.

The following checks verify that the DCU is receiving inputs from the front-panel keys. If any indication cannot be verified, proceed to BD8 to isolate the problem.

14. MTR Key Checks

a. Set upper LINE switch to STBY and the lower to OFF, then remove the DCU test connector and the shorting clip.

b. Set both LINE switches to ON, press RCL 0, and set the OUTPUT LEVEL meter to midrange using the VERNIER control.

Verify that the LVL key LED is on.

c. Press the AM key and verify that:
The meter drops to zero
The LVL key LED turns off
The AM key LED turns on

d. Press the FM key and verify that:
The meter does not change
The AM key LED turns off
The FM key LED turns on

e. Press the LVL key and verify that:
The meter returns to midrange
The FM key LED turns off
The LVL key LED turns on

15. Press and hold the MESSAGE key and verify that the FREQUENCY MHz display shows 00 (the MESSAGE key LED will not light). Release the MESSAGE key and verify that the FREQUENCY MHz display returns to 3000.000.

16. RF OUTPUT ON/OFF key check.

a. Press RF OUTPUT ON/OFF key and verify that:

The RF OUTPUT key LED turns off
The meter drops to zero
The ALC UNLEVELED and NOT $\phi$ LOCKED annunciators turn on

b. Press RF OUTPUT ON/OFF key again and verify that the display returns to normal.

17. ALC Key Checks

a. Press ALC DIODE key and verify that:

The INTERNAL key LED turns off
The DIODE key LED turns on
The OUTPUT LEVEL meter drops to zero
The ALC UNLEVELED annunciator turns on

b. Press ALC PWR MTR key and verify that:
The INTERNAL key LED stays off
The DIODE key LED turns off



www.valuetronics.com

**SERVICE SHEET BD1 (cont'd)**

**Front Panel Checks (cont'd)**

The PWR MTR key LED turns on
The ALC UNLEVELED annunciator stays on
The OUTPUT LEVEL meter remains at zero

c. Press ALC INTERNAL key and verify that:

The PWR MTR key LED turns off
The INTERNAL key LED turns on
The ALC UNLEVELED annunciator turns off
The OUTPUT LEVEL meter returns to mid-range

18. RANGE Key Checks

a. Press the RANGE (down arrow) key repeatedly and verify that the RANGE dBm display decreases in increments of 10 dBm, to a minimum of −90 dBm, each time the RANGE (down arrow) key is pressed.

b. Press the RANGE (up arrow) key repeatedly and verify that the RANGE dBm display increases in increments of 10 dBm, to a maximum of +10 dBm, each time the RANGE (up arrow) key is pressed.

c. Press RCL 0 to return RANGE dBm to −70.

19. AUTO PEAK Key Checks

a. Press the AUTO PEAK key and verify that the AUTO PEAK key LED turns off.

b. Press the AUTO PEAK key again and verify that the AUTO PEAK key LED turns on.

20. AM Key Checks

a. Press the 30% key and verify that its LED turns on.

b. Press the 100% key and verify that its LED turns on and the 30% key LED turns off.

c. Press the OFF key and verify that the 100% key LED turns off.

21. FM DEVIATION MHz Key Checks

a. Press the .03 key and verify that its LED turns on.

b. Press the .1 key and verify that its LED turns on and the .03 key LED turns off.

c. Press the .3 key and verify that its LED turns on and that the .1 key LED turns off.

d. Press the 1 key and verify that its LED turns on and the .3 key LED turns off.

e. Press the 3 key and verify that its LED turns on and the 1 key LED turns off.

f. Press the 10 key and verify that its LED turns on and the 3 key LED turns off.

g. Press the OFF key and verify that the 10 key LED turns off.

22. PULSE Key Checks

a. Press the AUTO PEAK key to turn off its LED.

b. Press the NORM key and verify the following:

The AUTO PEAK key LED turns on
The OUTPUT LEVEL meter immediately starts climbing slowly toward maximum deflection.
The ALC UNLEVELED annunciator turns on.

c. Press the AUTO PEAK key to turn off its LED.

d. Press the COMPL key and verify the following:

The AUTO PEAK key LED turns on
The OUTPUT LEVEL meter returns to midrange
The ALC UNLEVELED annunciator goes off

e. Press the PULSE OFF key and verify that the PULSE COMPL key LED goes off, and the AUTO PEAK key LED stays on.

23. SWEEP FREQ Key Checks

a. Press RCL 0 then press and hold the START key and verify that the FREQUENCY MHz display indicates 2000.000.

b. Press and hold the STOP key and verify that the FREQUENCY Mhz display indicates 4000.000.

c. Press and hold the ΔF key and verify that the FREQUENCY MHz display indicates 2000.000.

d. Press and hold the MKR key and verify that the FREQUENCY MHz display goes blank.



www.valuetronics.com

**SERVICE SHEET BD1 (cont'd)**

**Front Panel Checks (cont'd)**

24. SWEEP MODE Key Checks

a. Press the AUTO key and verify the following:

AUTO key LED turns on
FREQUENCY MHz display indicates 2000 4000

**NOTE**

*About 5 seconds after the AUTO key is pressed the MESSAGE key will begin flashing. If the MESSAGE key is pressed and held the FREQUENCY MHz display will indicate 16. This indicates that the selected sweep frequencies caused the frequency to cross a filter boundary.*

b. Press the OFF key and verify the following:

AUTO key LED turns off
FREQUENCY MHz display returns to 3000.000

c. Press the MANUAL key and verify the following:

The MANUAL key LED turns on
The FREQUENCY MHz display indicates 2000.00

d. Press the FREQ INCREMENT (down arrow) key and verify that the FREQUENCY MHz display does not change.

e. Press the FREQ INCREMENT (up arrow) key and verify that the FREQUENCY MHz display increases by 20 MHz each time it is pressed.

f. Press the FREQ INCREMENT (down arrow) key to return the FREQUENCY MHz display to 2000.00, then turn the TUNE control counterclockwise. Verify that the FREQUENCY MHz display does not change.

g. Turn the TUNE control clockwise and verify that the FREQUENCY MHz display increases in 20 MHz steps.

h. Press the OFF key and verify that the MANUAL key LED turns off.

i. Press the SINGLE key and verify that the SINGLE key LED turns on and the FREQUENCY MHz display indicates 2000.000.

j. Press the SINGLE key again and verify the the FRQUENCY MHz display indicates a single sweep of the frequency from 2000.00 to 4000.00 and returns to 2000.00.

k. Press the OFF key and verify that the SINGLE key LED turns off and the FREQUENCY MHz display returns to 3000.000.

25. SWEEP RATE Key Checks

a. Press and hold the STEP key and verify that the FREQUENCY MHz display indicates 100 20.000.

b. Press and hold the DWELL key and verify that the FREQUENCY MHz display indicates 20 ms.

26. LOCAL Key Check

Press the LOCAL key and verify that the FREQUENCY MHz display indicates 19. This is the HP-IB address of the Signal Generator.

27. Numeric Key Checks

a. Press the following keys in the order given: ., 0, 1, 2, 3, 4, 5, 6, 7, 8, 9. Verify that the FREQUENCY MHz display indicates .0123456789.

b. Press the delete (left arrow) key 11 times and verify that, starting at the right side of the FREQUENCY MHz display, one numeral is blanked each time the delete key is pressed, and that the display returns to 3000.000 after the decimal point is blanked.

28. FREQUENCY Key Checks

a. Press the following keys in sequence: FREQUENCY, 5, 0, 0, 0, 0, 0, 0, kHz. Verify that the FREQUENCY MHz display indicates 5000.000.

b. Press the following keys in sequence: FREQUENCY, 5, 0, 0, 0, MHz. Verify that the FREQUENCY MHz display indicates 5000.000.

c. Press the following keys in sequency: FREQENCY, 5, GHz. Verify that the FREQUENCY MHz display indicates 5000.000.

29. FREQ INCR Key Checks

a. Press RCL 0 to put the Signal Generator to 3000.00 MHz.



www.valuetronics.com

## SERVICE SHEET BD1 (cont'd)

### Front Panel Checks (cont'd)

b. Press the following keys in sequence: FREQ INCR, 1, kHz.

c. Press the FREQ INCREMENT (up arrow) key several times and verify that the FREQUENCY MHz display increases by 1 kHz each time it is pressed.

d. Press the following keys in sequence: FREQ INCR, 1, MHz.

e. Press the FREQ INCREMENT (up arrow) key several times and verify that the FREQUENCY MHz display increases by 1 MHz each time the key is pressed.

f. Press the following keys in sequence: FREQ INCR, 1, GHz.

g. Press the FREQ INCREMENT (up arrow) key several times and verify that the FREQUENCY MHz display increases by 1 GHz each time it is pressed.

30. STEPS/ms Key Check

a. Press the following keys in sequence: SWEEP RATE STEP, 1, 5, STEP/ms.

b. Press STEP ms and verify that the FREQUENCY MHz display indicates 15 133.333.

c. Press the following keys in sequence: SWEEP RATE DWELL, 1, 5, STEP/ms.

d. Press STEP/ms and verify that the FREQUENCY MHz display indicates 15 ms.

31. TUNE ON/OFF Key Check

a. Press the TUNE ON/OFF key and verify that its LED turns off.

b. Rotate the TUNE knob clockwise and counterclockwise and verify that the FREQUENCY MHz display does not change.

c. Press the TUNE ON/OFF key and verify that its LED turns on.

d. Rotate the TUNE knob clockwise and counterclockwise and verify that the FREQUENCY MHz display increases and then decreases.

32. NORMAL/BYPASS Key Check

a. Press RCL 0 then press the NORMAL/BYPASS key on the A5 Assembly.

b. Verify that the NORMAL LED turns off and the BYPASS LED turns on.

c. Again press the NORMAL/BYPASS key and verify that the BYPASS LED turns off and the NORMAL LED turns on.

33. If all of the above Front Panel Checks were performed with no failures, proceed with the Base Band Checks beginning with Step 34.

### Base Band Checks ☑4 ☑5 ☑6

#### YTO Frequency Check ☑4

34. Disconnect the semi-rigid coax from the output of coupler A3A1A1J1 (BD1 TPH), and connect the frequency counter in its place (frequency counter should be connected as in Figure 8-20). Refer to BD1, top and bottom view drawings for test point locations.

35. Set FREQ to 2.000000 GHz and FREQ INCR to 111.111 MHz.

36. Tune the Signal Generator from 2.000000 GHz to 6.600000 GHz, in 111.111 MHz steps.

The frequency on the counter should agree with the FREQ MHz display ±1 count.

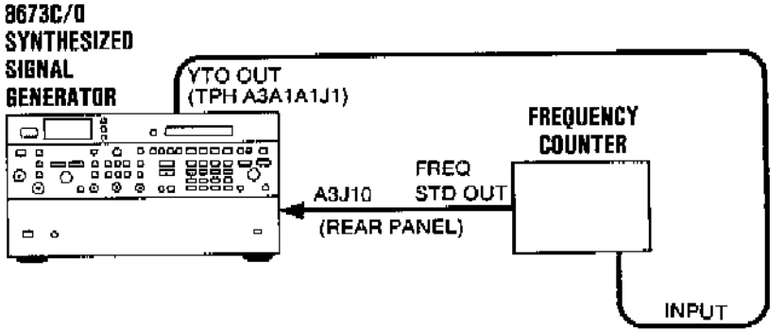


**Figure 8-20. HP 8673C/D Baseband Frequency Test Setup**



www.valuetronics.com

## SERVICE SHEET BD1 (cont'd)

### Base Band Checks (cont'd)

If the frequency is not correct, proceed with REFERENCE LOOP CHECK, Step 37. Otherwise, proceed with step 43, YTO Power Checks.

#### Reference Loop Checks (✓4a)

37. With frequency counter connected as in Figure 8-21, measure the frequency at the following test points:

| Test Point | Frequency |
|---|---|
| TPA | 100 MHz |
| TPB | 10 MHz |
| TPD | 10 MHz |
| TPE | 400 MHz |
| TPC | 20 MHz |

If any of the above frequencies are not correct within ±1 count, proceed to BD2 to isolate the problem.

If the frequencies are correct proceed with Step 38, LFS Loop Check.

#### LFS Loop Checks (✓4b)

38. Disconnect the green cable from A2A3J1 (BD1 TPF) and connect the counter in its place.

39. Set FREQ to 2.000000 GHz and FREQ INCR to 1.111 MHz. Step through the frequencies shown below and ensure that the counter reading agrees ±1 count:

| Signal Generator Frequency | Frequency Counter Reading |
|---|---|
| 2.000000 GHz | 30.000000 MHz |
| 2.001111 GHz | 28.889000 MHz |
| 2.002222 GHz | 27.778000 MHz |
| 2.003333 GHz | 26.667000 MHz |
| 2.004444 GHz | 25.556000 MHz |
| 2.005555 GHz | 24.445000 MHz |
| 2.006666 GHz | 23.334000 MHz |
| 2.007777 GHz | 22.223000 MHz |
| 2.008888 GHz | 21.112000 MHz |
| 2.009999 GHz | 20.001000 MHz |

If the frequencies are correct, proceed with Step 40, M/N Loop Check.

If one or more of the frequencies are incorrect, proceed to BD3 to isolate the problem in the LFS loop.

#### M/N Loop Checks (✓4c)

40. Reconnect the green cable to A2A3J1 and disconnect the white/orange cable from A3A1A5J3 (TPG).

41. Connect the frequency counter to A3A1A5J3. Set FREQ to 2.100000 GHz and FREQ INCR to 210 MHz.

42. Step through the frequencies shown below and check corresponding frequency counter reading for each frequency.

The counter reading should agree ±1 count.

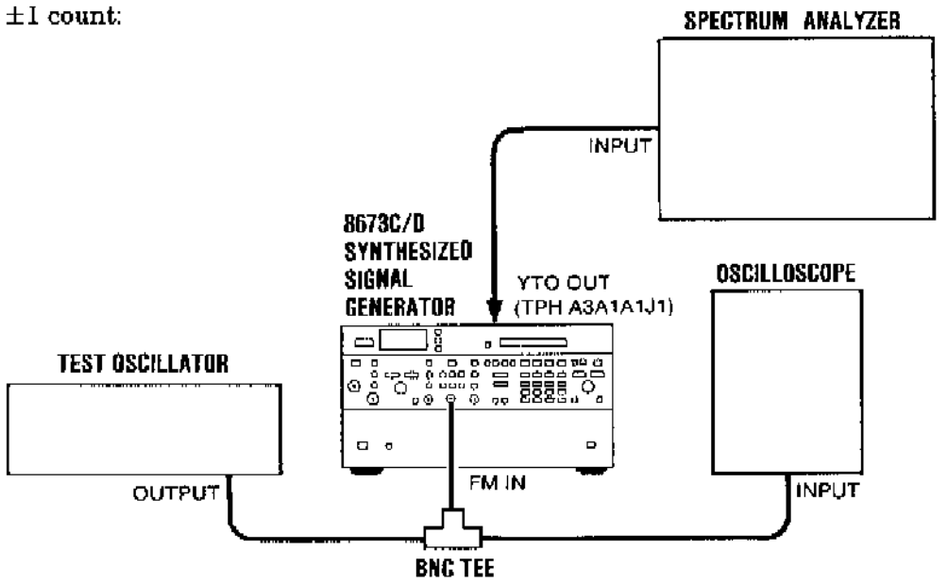


Figure 8-21. HP 8673C/D FM Test Setup



www.valuetronics.com

## SERVICE SHEET BD1 (cont'd)

### M/N Loop Checks (cont'd)

| Signal Generator Frequency | Frequency Counter Reading |
|---|---|
| 2.100000 GHz | 177.500000 MHz |
| 2.310000 GHz | 180.000000 MHz |
| 2.520000 GHz | 182.142857 MHz |
| 2.730000 GHz | 184.000000 MHz |
| 2.940000 GHz | 185.625000 MHz |
| 3.150000 GHz | 187.058824 MHz |
| 3.360000 GHz | 188.333333 MHz |
| 3.570000 GHz | 189.473684 MHz |
| 3.780000 GHz | 190.500000 MHz |
| 3.990000 GHz | 191.428571 MHz |
| 4.200000 GHz | 192.272727 MHz |
| 4.410000 GHz | 193.043478 MHz |
| 4.620000 GHz | 194.750000 MHz |
| 4.830000 GHz | 195.400000 MHz |
| 5.040000 GHz | 195.000000 MHz |
| 5.250000 GHz | 195.555556 MHz |
| 5.460000 GHz | 196.071429 MHz |
| 5.670000 GHz | 196.551724 MHz |
| 5.880000 GHz | 197.000000 MHz |
| 6.090000 GHz | 197.419355 MHz |
| 6.300000 GHz | 191.818182 MHz |
| 6.510000 GHz | 192.352941 MHz |

If the frequencies are correct, the problem is in the YTO loop. Proceed to BD4 to isolate.

If any frequency is not correct, proceed to BD3 to isolate the problem in the M/N loop.

When the problem has been corrected, repeat the procedure from Step 1.

### YTO Power Checks ⑤

Initial conditions: FREQ set to 2.000000 GHz
FREQ INCR set to 111.111 MHz

43. Disconnect the frequency counter and connect the power meter to BD1 TPH.

44. Tune the Signal Generator from 2.000000 GHz to 6.500000 GHz, in 111.111 MHz steps and record the power level for each step.

    Power should be greater than +14 dBm for all frequencies.

    If the power is low at any or all points, proceed to BD4 to isolate the problem. Otherwise, proceed to Step 45.

### YTO/FM Checks ⑥

45. Press AM OFF and verify that both AM % LEDs are off.

46. Press FM DEVIATION MHz .3 and MTR FM pushbuttons and verify both LEDs light. Connect the test equipment as shown in Figure 8-21.

47. Apply 100 kHz and adjust the output level of the test oscillator to obtain the first carrier null (modulation index = 2.404). Verify the voltage applied is 0.567±0.049 Vrms and the front panel meter indicates 240 ±30 kHz.

    If the voltage applied is incorrect proceed to BD4 to further isolate the problem.

    If only the front panel meter indication is incorrect, the problem is most likely in the metering control assembly (Service Sheet 21).

    If both indications are correct, the FM circuits are probably working properly. If any doubt exists perform the FM adjustment procedures in Section V. Otherwise, proceed with Step 48, Output Level Check.

### Output Level Checks ⑦

48. Connect the test equipment as shown in Figure 8-22.

49. Press RCL 0 then ALC DIODE. Verify that the RF OUTPUT, and ALC DIODE indicators, and the ALC UNLEVELED annunciator are on.

50. Insert HP 8673C/D adjustment cassette P/N 11726-10004 REV. A or higher, into the HP-85.

51. Load and run the program "EXEC." A more complete description of this software is given in the Adjustment Procedures, Section V, of this manual.

52. From the main menu select K6=MAX POWER & OTHER UTILITIES.

53. From the MAX POWER & UTILITY menu select K1= MAX Power Test.

54. Run the following plots, as appropriate.
    a. K1=.05 to 2 GHz POWER TEST (HP 8673 C and D)
    b. K2=HP 8673C 2 to 18 GHz (HP 8673C only)
    c. K4=HP 8673D 2 to 26 GHz with K-Band Amp (HP 8673D only)



www.valuetronics.com

## SERVICE SHEET BD1 (cont'd)

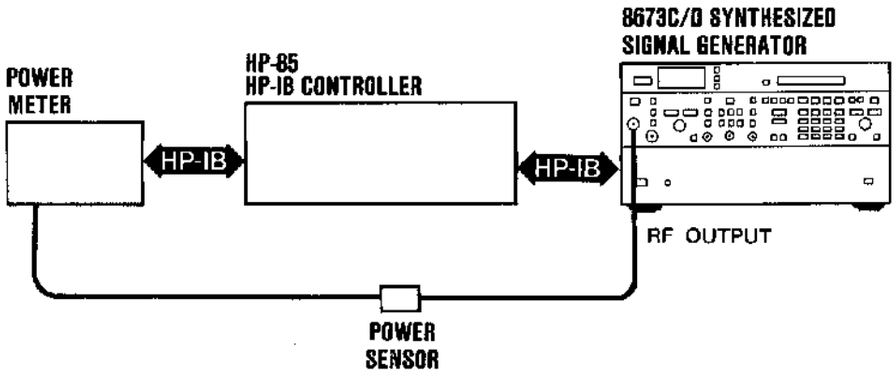


**Figure 8-22. HP 8673C/D Power Output Test Setup**

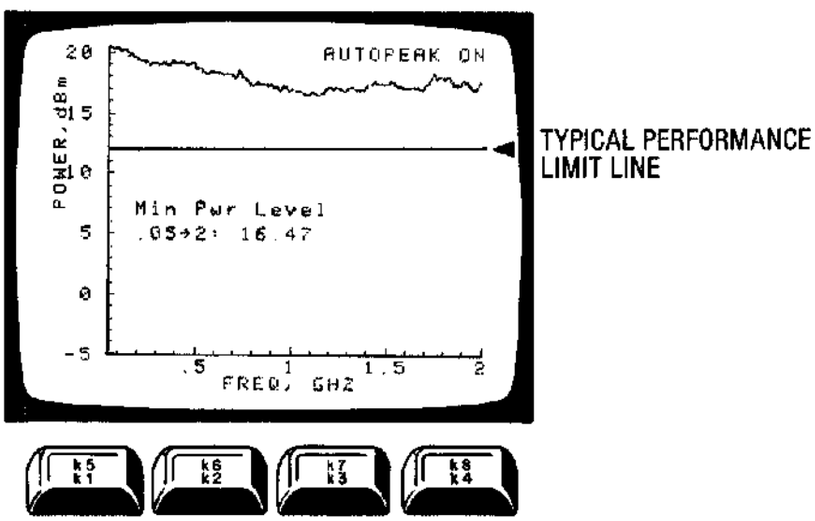


**Figure 8-23. HP 8673C/D Low Band Power Plot**

### Output Level Checks (cont'd)

For each plot, select
AUTO PEAKER ON, and
NORMAL MODE

55. Compare the plots taken in Step 54 with the corresponding plots in Figures 8-23 through 8-25. There are three possible results:

a. The plots taken in Step 54 are essentially the same as the corresponding plots in Figures 8-23 through 8-25. If this is the case proceed with AM/ALC CHECK beginning with Step 56.

b. The power at one or more of the frequencies in one or both of the plots taken in Step 54 drops significantly below the Typical Performance limit line. This would indicate an output power problem. Proceed to BD5 to further isolate the problem.

**NOTE**

*BD5 troubleshooting includes procedures to isolate the problem to BD6 or BD7.*

c. The power at one or more of the frequencies in one or both of the plots taken in Step 54 is significantly lower than the power for the corresponding frequency in Figures 8-23 through 8-25, but not below the Typical Performance limit line. This would not necessarily indicate an output power problem but could affect AM and/or ALC operation. Proceed with AM/ALC CHECK beginning with Step 56.



www.valuetronics.com

**SERVICE SHEET BD1 (cont'd)**

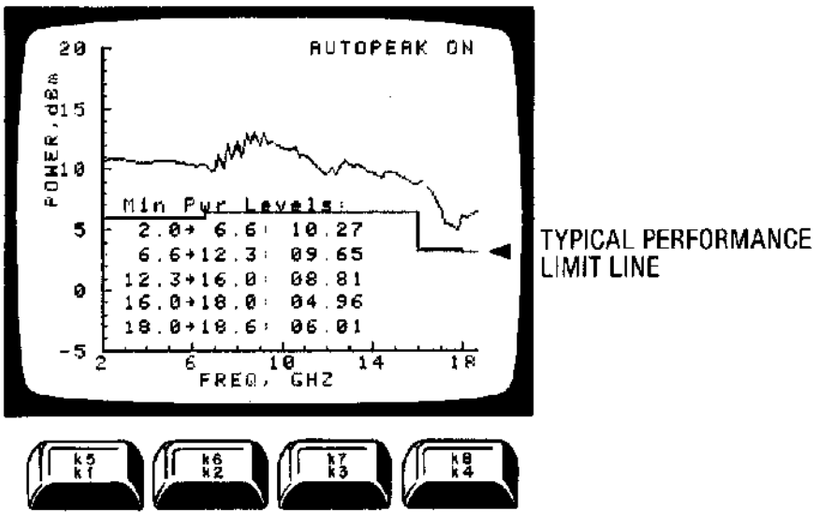


**Figure 8-24. HP 8673C High Band Power Plot**

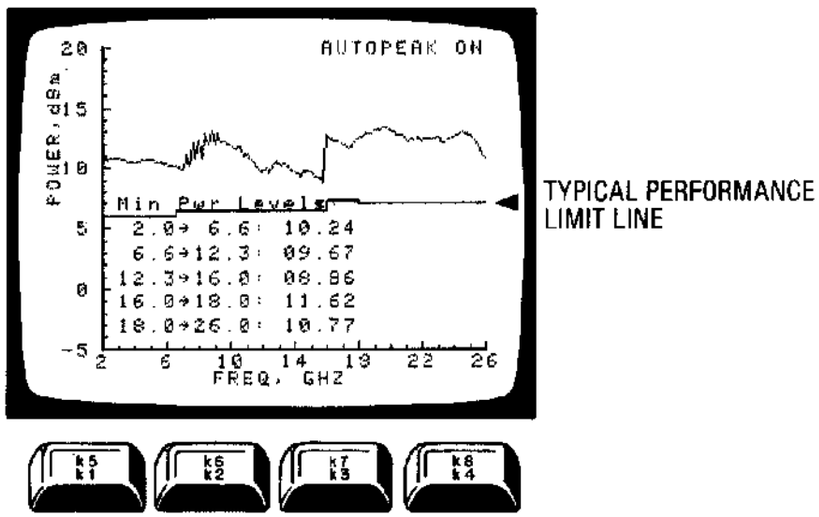


**Figure 8-25. HP 8673D High Band Power Plot**

## Output Level Checks (cont'd)

### ALC/AM Check. (✓8)

56. Press RCL 0, then connect 10 kHz at 0.707 Vrms to the AM IN connector. Press the AM 30% and MTR AM keys and verify that their LEDs turn on. Connect the Spectrum Analyzer to the RF OUTPUT connector. Set the Signal Generator output power level to −10 dBm.

    The Front Panel meter should indicate 30% ±3% and the first sidebands displayed on the spectrum analyzer should be about 16.5 dB below the carrier.

    If both readings are correct, continue with Step 57.

    If either or both indications are incorrect, proceed to BD6 to further isolate the problem.

57. Press the AM 100% key and verify that its LED turns on. Adjust the input voltage to obtain sidebands 12 dB below the carrier level.



www.valuetronics.com

**SERVICE SHEET BD1 (cont'd)**

The input voltage should be 0.354±0.018 Vrms and the Front Panel meter should indicate between 40% and 60%.

If both indications are correct, the AM circuits are probably working properly. If any doubt exists, perform the AM adjustment procedure in Section V. Otherwise proceed with Pulse Modulation Checks.

If either or both indications are incorrect, proceed to BD6 to further isolate the problem.

58. Set Signal Generator to 1 GHZ and repeat steps steps 56 and 57 to check the AM circuits in the Downconverter Assembly.

**Pulse Modulation Checks.** (✓8)

If the HP 8673C/D has a pulse modulation problem, and if the unit passes all of the above checks, the problem is in one of the pulse modulation boards. Proceed to BD7 to isolate the problem.



www.valuetronics.com

FIG. 8-26
Sht 1 of 4

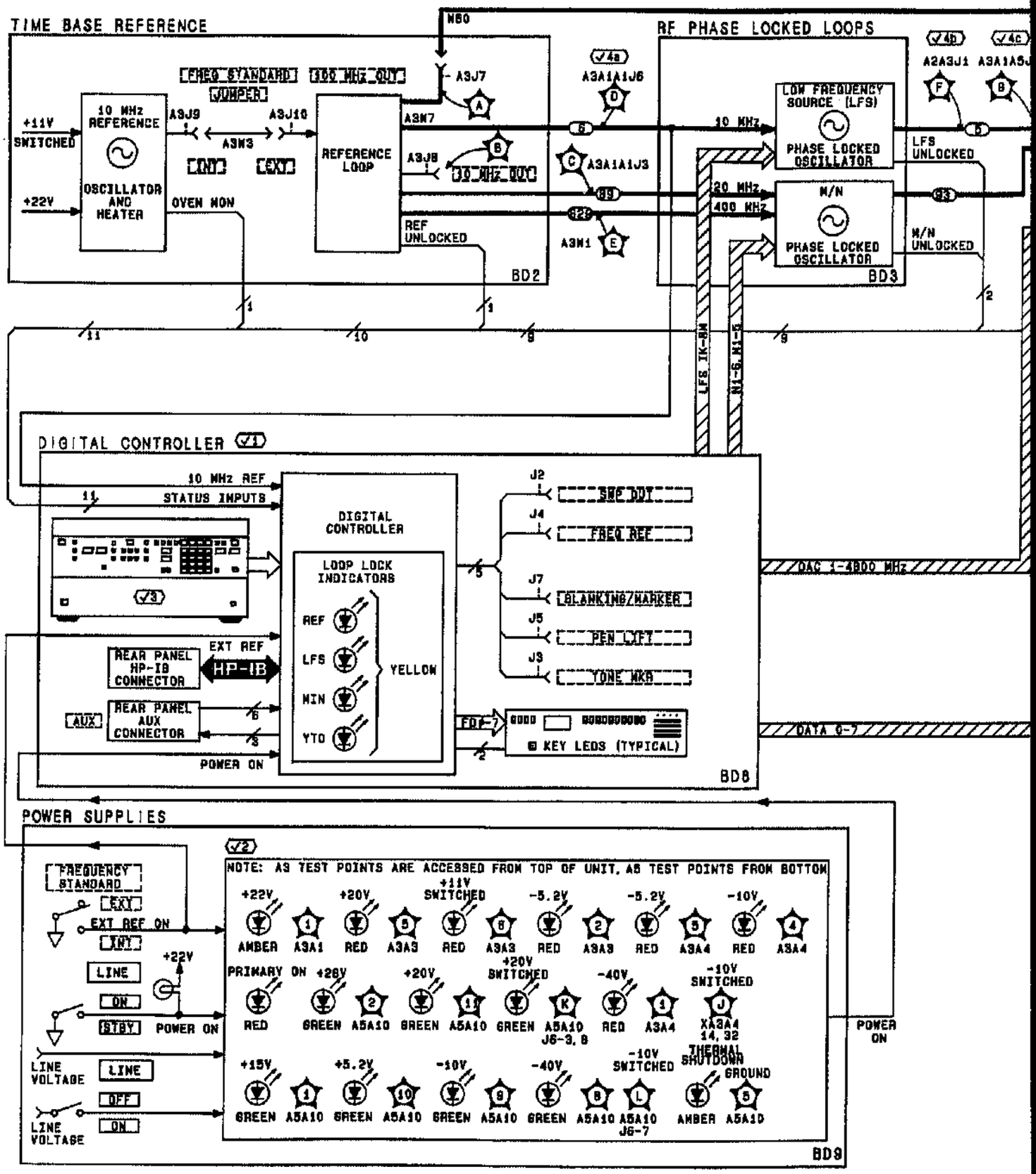


www.valuetronics.com

FIG. 8-26
SHT 2 of 4

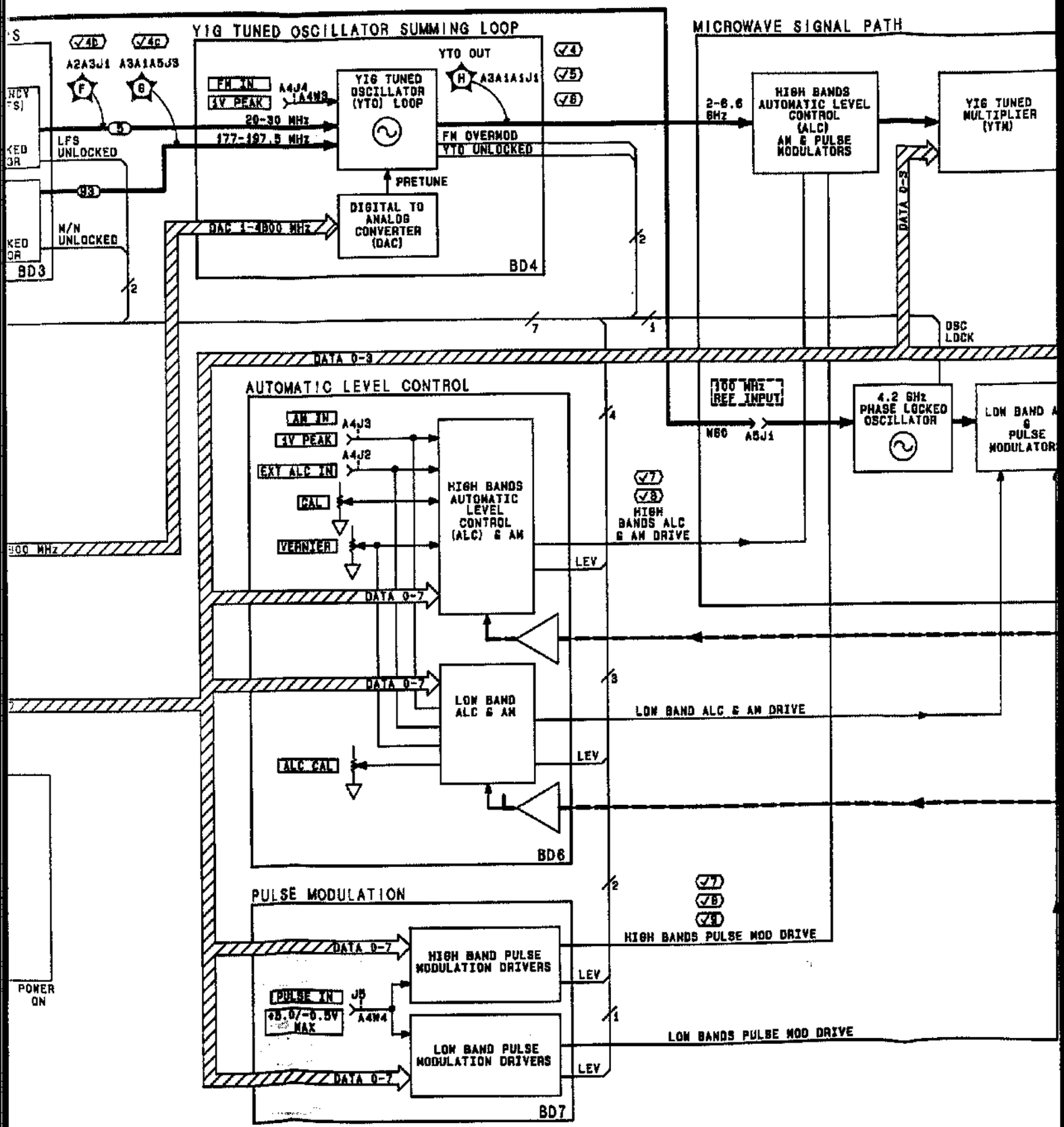


www.valuetronics.com

FIG. 8-26
Sht 3 of 4

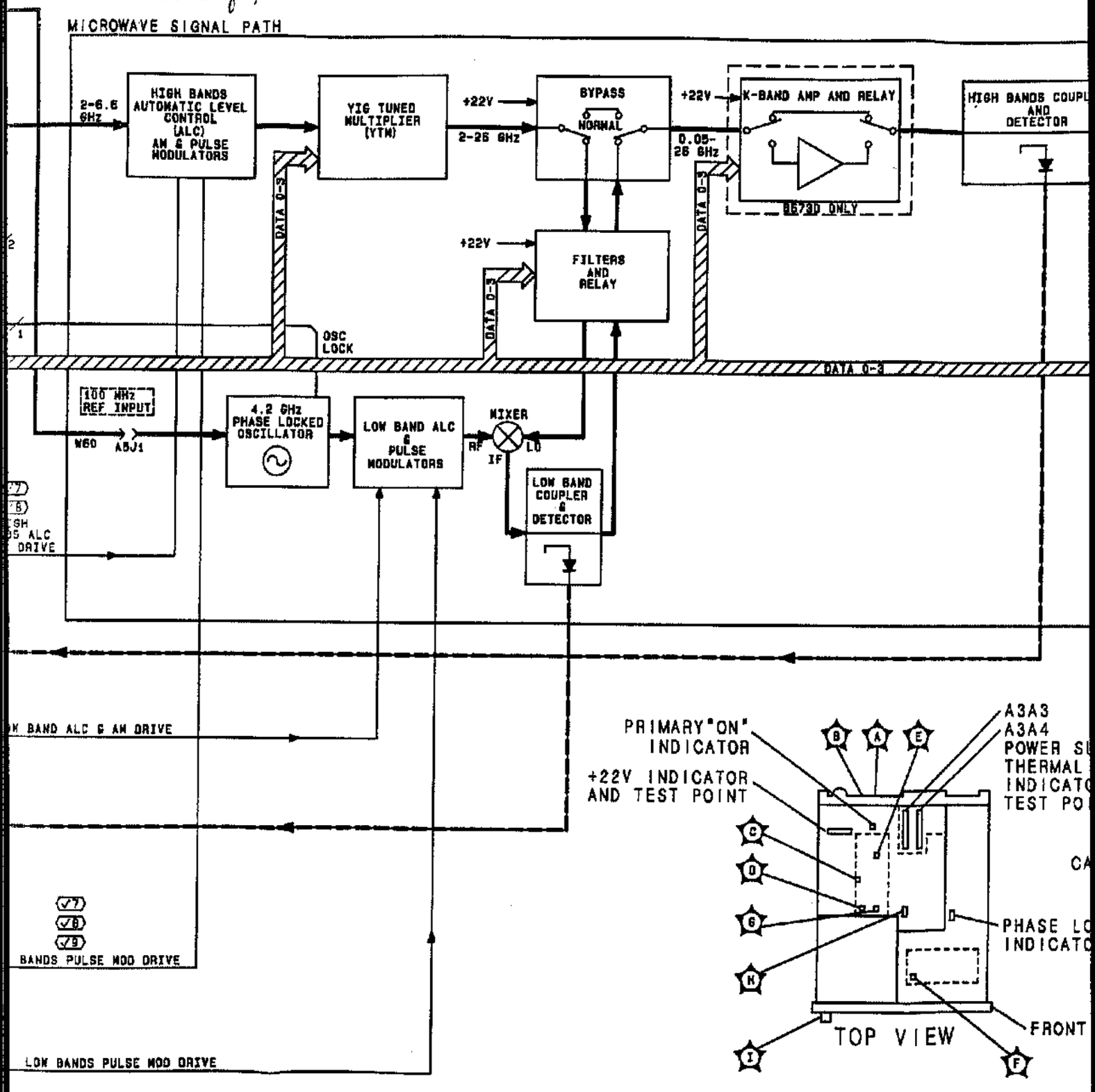


www.valuetronics.com

FIG. 8-26
SHT 4 of 4

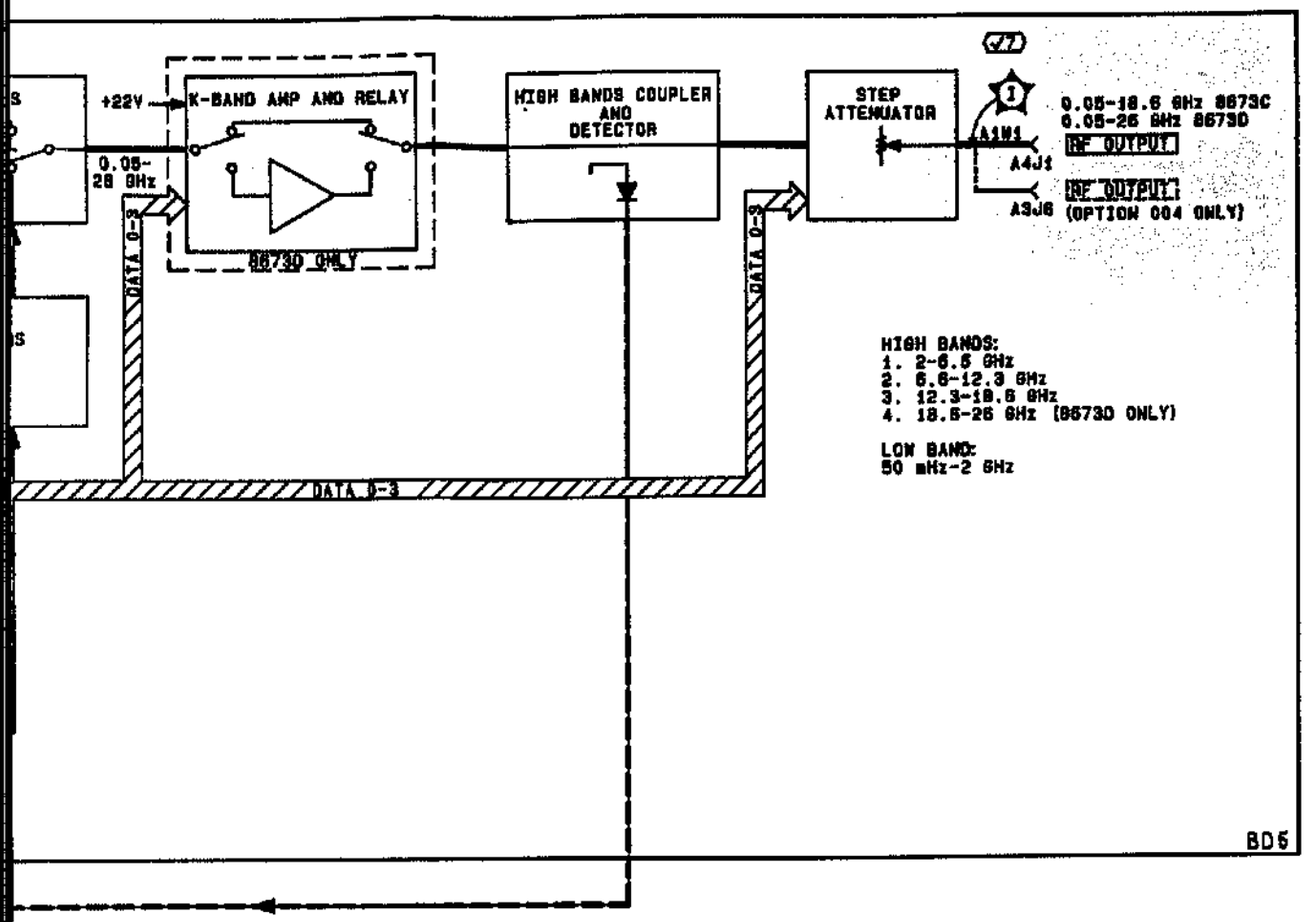


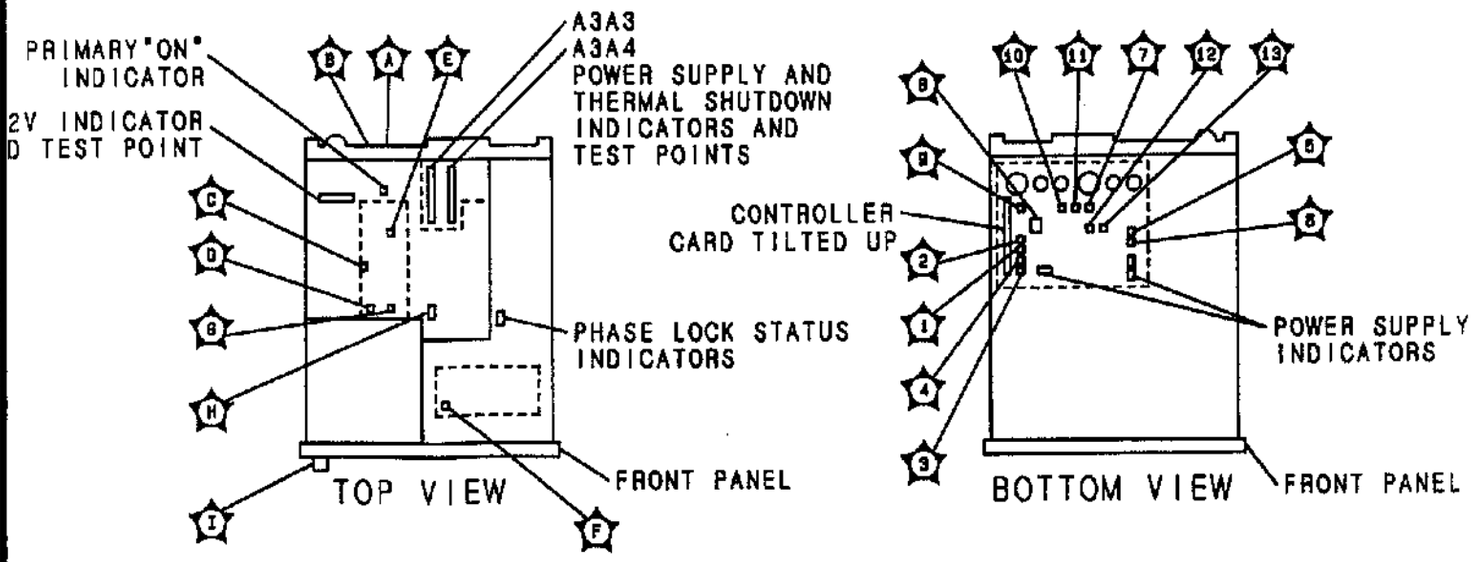


BD1

Figure 8-26. HP 8673C/D Overall Troubleshooting, Block Diagram



www.valuetronics.com

## SERVICE SHEET BD2
## TIME BASE REFERENCE

### REFERENCES

- Overall Block Diagram and Troubleshooting, BD1 ..... Service Sheet BD1
- Disassembly Procedures ..... Service Sheets A & B
- Interior Views ..... Service Sheets C & D
- Illustrated Parts Breakdown (IPB) ..... Section VI
- Post Repair Adjustments ..... Section V
- HP 10811A/B Crystal Oscillator Operating and Service Manual

### PRINCIPLES OF OPERATION

The Time Base Reference generates precise time base reference signals of 10, 20, 100 and 400 MHz. These frequencies are generated from an internal, 10 MHz crystal oscillator, or from an external 5 or 10 MHz oscillator. The four time base reference signals are used as references for the M/N Loop, the Low Frequency Source (LFS) Loop, the downconverter circuits in the Down converter Assembly, and the Digital Controller.

The Time Base Reference consists of two sections:

- Reference Loop Phase Detector, Service Sheet 1
- Reference Loop Oscillator and Frequency Multiplier, Service Sheet 2

The Reference Loop Oscillator and Frequency Mulitplier section contains a 100 MHz voltage controlled crystal oscillator (VCXO) that is phase locked to the 10 MHz Reference Oscillator by phase lock circuits in the Reference Loop Phase Detector. The 100 MHz output from the VCXO goes three places:

- It is fed back to the Reference Phase Detector where it is divided by 10 (÷5 and ÷2) and compared to the 10 MHz Reference Oscillator output to generate the Tune Voltage that keeps the 100 MHz VCXO phase locked to the 10 MHz reference. The output of the ÷5 circuit is buffered to become the internal 20 MHz reference and the output of the ÷2 circuit is routed to three separate buffers to become the three internal 10 MHz references.
- It is routed to the quadrupler to produce the 400 MHz reference output.
- It is routed to the rear panel as the 100 MHz reference. This reference is connected to the Downconverter Assembly by a jumper and is used in the downconverter circuits.

### TROUBLESHOOTING

#### General

It is assumed that the troubleshooting information associated with Service Sheet BD1 has been used to isolate a malfunction to the Time Base Reference BD2. The following troubleshooting procedure can be used to further isolate the problem to one of the following:

10 MHz Reference Oscillator
Reference Phase Detector
100 MHz VCXO

#### Test Equipment Required

| | |
|---|---|
| Frequency Counter ..... | HP 5343A |
| Variable Power Supply ..... | HP 6202B |
| Digital Voltmeter ..... | HP 3456A |
| Spectrum Analyzer ..... | HP 3580A |

#### Troubleshooting Procedure

This procedure is divided into two checks, as follows:

Reference Oscillator Check (✓1)
100 MHz VCXO Check (✓2)

If the reference Oscillator and the 100 MHz VCXO are operating normally, then, by default, the problem must be with the Reference Phase Detector.

##### Reference Oscillator Check (✓1)

1. Remove the gray jumper (8) from A3J9 on the rear panel and connect the counter in its place.

   The counter should read 10 MHz ±30 Hz.

   If the frequency is incorrect, the reference oscillator is defective or requires adjustment. Proceed to the 10 MHz Reference Oscillator Adjustment procedure in Section V and attempt to adjust it. If it cannot be adjusted, refer to the HP 10811A/B Crystal Oscillator Operating and Service Manual for troubleshooting information.

   If the frequency is correct, proceed with Step 2.

2. Remove the counter and connect the power meter in its place.



www.valuetronics.com

## SERVICE SHEET BD2 (cont'd)

### Reference Oscillator Check ☑1 (cont'd)

The power meter should read at least +8 dBm.

If the power is not correct, the reference oscillator is defective, or requires adjustment. Proceed to the 10 MHz Reference Oscillator Adjustment procedure in Section V and attempt to adjust the reference oscillator. If it cannot be adjusted, replace it.

If the power is correct, remove the power meter, replace the gray jumper, and proceed with ☑2 100 MHz VCXO Check, beginning with Step 3.

### 100 MHz VCXO Check ☑2

3. Remove A3A1A1. This opens the reference phase lock loop and allows us to check the VCXO.

4. Remove the grey/orange/white (839) cable from A2A1A2J1 and connect the spectrum analyzer in its place.

5. Using the DVM, set variable power supply for −8.0 volts and turn power supply off. Connect the power supply positive lead to chassis ground and the negative lead to A3A1A2TP1.

6. Turn the power supply on and observe the spectrum analyzer.

   The frequency should be 100 MHz ±1 MHz at a power level of at least +3 dBm.

   If a signal is present but the frequency and/or power is not as indicated, go to the Reference Loop VCXO Adjustment procedure in Section V and attempt to adjust the VCXO.

   If there is no signal or if the VCXO cannot be properly adjusted, either the VCXO or the 100 MHz Buffer is defective, go to Service Sheet 2.

   If the signal is as indicated, leave the power supply connected to TP1, replace the gray/orange/white (839) cable and proceed with Step 7.

7. Remove the gray jumper from rear panel connector A3J7 and connect the spectrum analyzer in its place.

   The spectrum analyzer display should show a 100 ±1 MHz signal at a power level of at least 0 dBm.

   If the signal is not as indicated, the 100 MHz amplifier is defective. Go to Service Sheet 2. Otherwise, continue with Step 8.

8. Remove the gray/red/white (829) cable from A3A1A5J1 and connect it to the spectrum analyzer.

   The spectrum analyzer should show a 400 ±4 MHz signal at a power level of at least −10 dBm.

   If the indication is not correct, the quadrupler or associated circuitry is defective. Go to Service Sheet 2.

   If the indication is correct, A3A1A2 is operating normally. If the Reference Oscillator is operating normally per ☑1, the problem is in Reference Phase Detector A3A1A1. Replace the gray/red/white (829) cable, remove the power supply from TP1, and go to Service Sheet 1.



www.valuetronics.com

FIG. 8-27
SHT 1 of 3

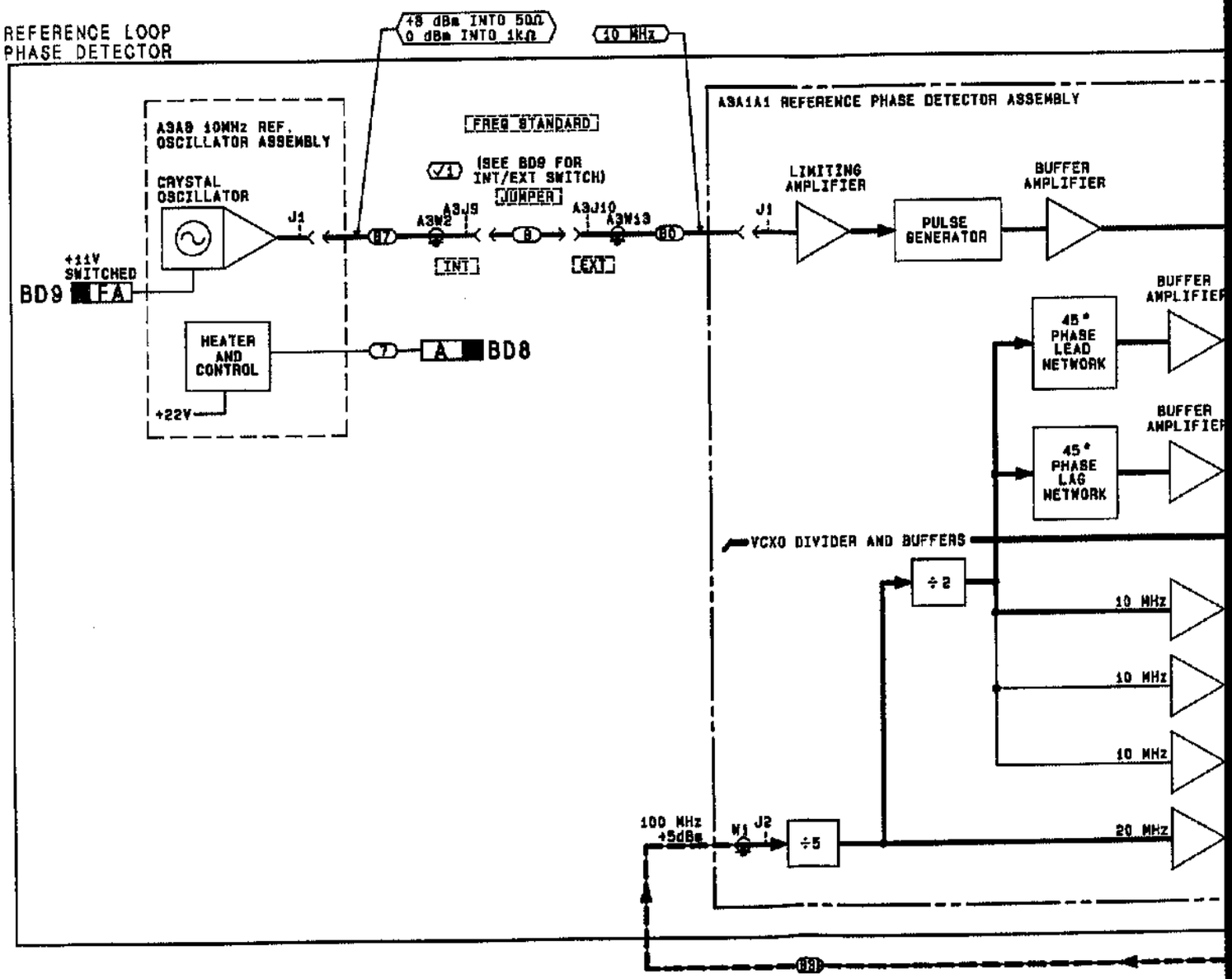


www.valuetronics.com

FIG. 8-27
Sht 2 of 3

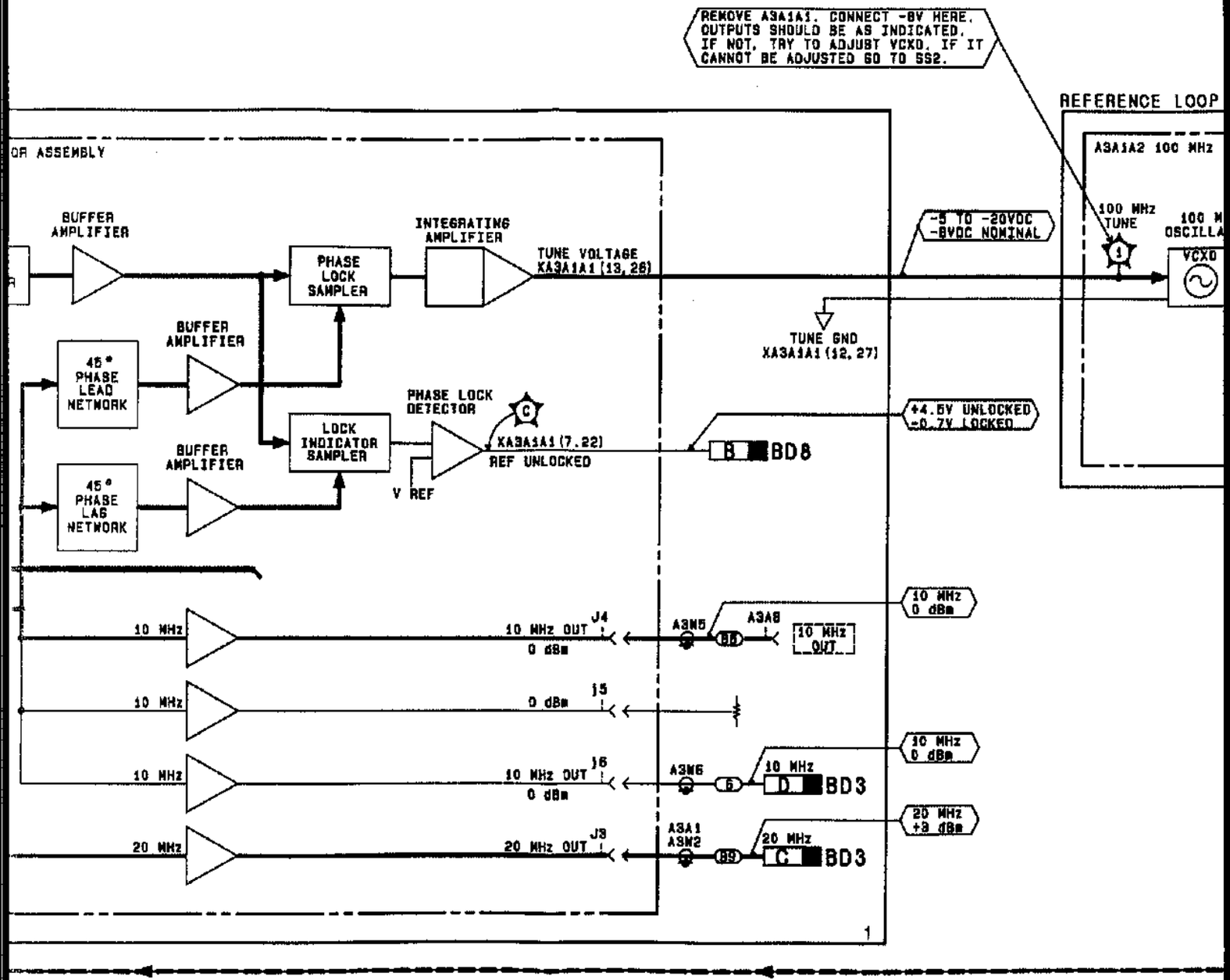


www.valuetronics.com

FIG. 8-27
SHT 3 of 3

TROUBLESHOOTING NOTES:
1. IF (V2) AND (V2) ARE NORMAL, THEN A3A1A1 IS AT FAULT.
2. BE SURE TO CHECK POWER AS INDICATED.

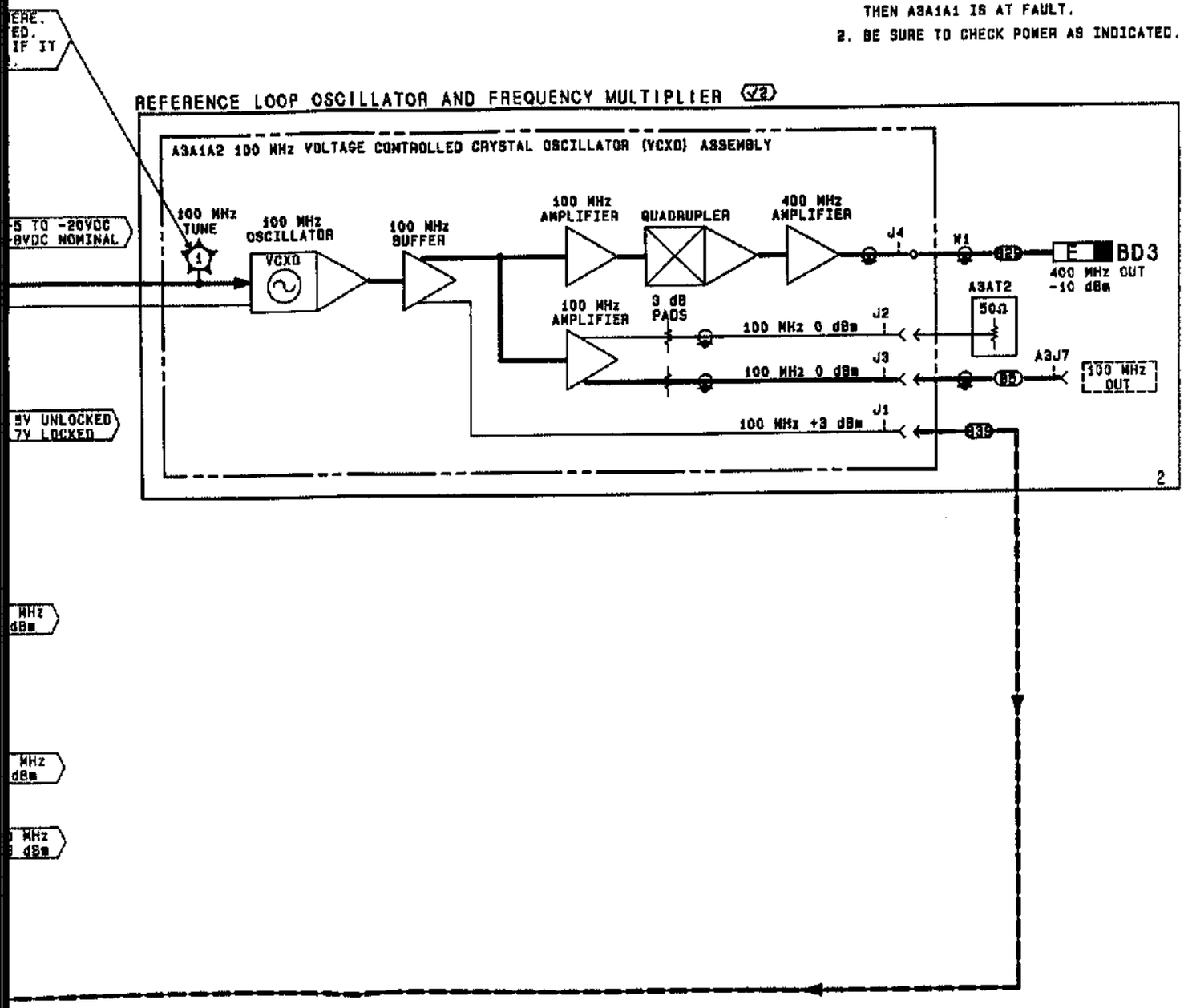


BD2

Figure 8-27. HP 8673C/D Time Base Reference, Block Diagram



www.valuetronics.com

## SERVICE SHEET BD3
## RF PHASE LOCKED LOOPS

### REFERENCES

- Overall Block Diagram and Troubleshooting, BD1 ..... Service Sheet BD1
- Disassembly Procedures ..... Service Sheets A & B
- Interior Views ..... Service Sheets C & D
- Illustrated Parts Breakdown (IPB) ..... Section VI
- Post Repair Adjustments ..... Section V

### PRINCIPLES OF OPERATION

#### General

The RF Phase Locked Loops, under control of the Digital Control Unit (DCU), control the YTO output frequency. Two RF Phase Locked Loops are used to accomplish this:

- The Low Frequency Source (LFS) Loop, which controls YTO frequencies of 9.999 MHz and less in 1 kHz steps, and
- The M/N Loop, which controls YTO frequencies of 10 MHz to 6.6 GHz in 10 MHz steps.

Each is discussed separately below.

#### Low Frequency Source (LFS) Loop

The LFS loop synthesizes the 1 MHz, 100 kHz, 10 kHz and 1 kHz digits in the YTO output frequency. This is done by generating an output signal whose frequency varies from 20.001 MHz to 30.000 MHz. To do this the DCU decodes the four least significant bits of the selected frequency and sends it to the LFS loop as the 16-bit, LFS 1K—8M signal. This signal controls the LFS loop output frequency which is then used as a reference input signal to the YTO. The LFS Loop output frequency is given by the following equation:

$$f_{LFS} = 30 - x.xxx \text{ MHz}$$

where:

$f_{LFS}$ = the LFS Loop output frequency, and x.xxx signifies the four least significant digits of the YTO frequency.

The YTO frequency can be calculated from the Signal Generator output frequency by using the following formulas for each band:

Low Band $f_{YTO} = f_{OUT} + 4.2$ GHz

Band 1 $f_{YTO} = f_{OUT}$

Band 2 $f_{YTO} = f_{OUT}/2$

Band 3 $f_{YTO} = f_{OUT}/3$

Band 4 $f_{YTO} = f_{OUT}/4$

where:

$f_{YTO}$ = the YTO output frequency, and
$f_{OUT}$ = the Signal Generator Output frequency.



www.valuetronics.com

The LFS Loop consists of:

- 20/30 MHz Divider,
- 20/30 Phase Detector,
- 160—240 MHz VCO

Inputs to the 20/30 MHz Divider are the 10-MHz reference signal from the Reference Loop in A3, and 16 bits of digital information (LFS 1K—8M) from the Frequency Output-HP-IB assembly. A 160—240 MHz feedback signal, from the 160—240 MHz VCO Assembly portion of the Low Frequency Source, is also input to the 20/30 MHz Divider Assembly.

The divide by 10/11 prescaler output, in conjunction with a programmable divider, generates a nominal 80 kHz output when the LFS loop is phase locked. In the Phase Detector Assembly, this signal is compared to the 80 kHz reference signal (10 MHz divided by 125) to generate a pulse whose width is determined by the phase difference between the two signals. This pulse is integrated to obtain a dc tuning voltage, which will always drive the VCO frequency in the correct direction to maintain phase lock. If the loop unlocks, a one shot multivibrator is continuously retriggered and the NOT PHASE LOCKED status annunciator will light.

The 160-240 VCO Assembly contains a voltage controlled oscillator that is controlled by the TUNE OUT signal from the 20/30 Phase Detector. It is tuned, based on the LFS 1K—8M inputs, in discrete steps from 160.008 MHz and 240 MHz. The oscillator output has two paths. One is a filtered feedback path to the 20/30 MHz Divider Assembly. In the other path the signal is divided by eight and filtered to obtain a relatively clean signal between 20.001 MHz and 30.000 MHz. This signal goes to the YTO Loop in A3.

## M/N LOOP

The M/N Loop consists of the M/N Phase Detector, the M/N VCO and M/N Output and generates a 177 to 197.5 MHz signal at +3 dBm. This signal controls the four most significant digits of the YTO frequency. The loop is phase locked to the 400 MHz and 20 MHz reference signals from the Reference Loop. Two binary numbers (M and N), generated by the DCU, are used to control the M/N Loop frequency. The DCU generates the M and N numbers by decoding the most significant digits (10 MHz to 10 GHz) of the selected front panel frequencies. The ratio of M/N determines the M/N OUT frequency.

For each valid M/N OUT frequency change, a 10 MHz step occurs in the YTO output. This step complements the LFS Loop whose tuning range is 10 MHz in 1 kHz steps. Together, the M/N Loop, YTO pretuning, and the LFS Loop, tune the YTO from 2000.000 to 6599.999 MHz in 1 kHz steps.

Phase offsets between divider outputs are constant when the M/N Loop is phase locked. If the M/N Loop unlocks, the front panel NOT PHASE LOCKED status annunciator turns on.



www.valuetronics.com

The relationshsip between M/N loop output frequency and the M and N numbers is shown by the equation

$$f_{M/N} = [200 - 10(M/N)]\ MHz$$

where:

$f_{M/N}$ = M/N frequency out
M = M number
N = N number

Table 8-5 lists the M and N numbers, M/N output frequencies and YTO frequencies.



www.valuetronics.com

Table 8-5. Listing of all M and N Numbers and Resulting Frequencies (1 of 5)

| Freq. MHz | M | N | M/N MHz | Freq. MHz | M | N | M/N MHz |
|---|---|---|---|---|---|---|---|
| 2000 | 17 | 11 | 184.545455 | 2530 | 24 | 14 | 182.857143 |
| 2010 | 16 | 11 | 185.454545 | 2540 | 23 | 14 | 183.571429 |
| 2020 | 15 | 11 | 186.363636 | 2550 | 22 | 14 | 184.285714 |
| 2030 | 14 | 11 | 187.272727 | 2560 | 21 | 14 | 185.000000 |
| 2040 | 13 | 11 | 188.181818 | 2570 | 20 | 14 | 185.714286 |
| 2050 | 12 | 11 | 189.090909 | 2580 | 19 | 14 | 186.428571 |
| 2060 | 11 | 11 | 190.000000 | 2590 | 18 | 14 | 187.142857 |
| 2070 | 10 | 11 | 190.909091 | 2600 | 17 | 14 | 187.857143 |
| 2080 | 9 | 11 | 191.818182 | 2610 | 16 | 14 | 188.571429 |
| 2090 | 8 | 11 | 192.727273 | 2620 | 15 | 14 | 189.285714 |
| 2100 | 27 | 12 | 177.500000 | 2630 | 14 | 14 | 190.000000 |
| 2110 | 26 | 12 | 178.333333 | 2640 | 13 | 14 | 190.714286 |
| 2120 | 25 | 12 | 179.166667 | 2650 | 12 | 14 | 191.428571 |
| 2130 | 24 | 12 | 180.000000 | 2660 | 11 | 14 | 192.142857 |
| 2140 | 23 | 12 | 180.833333 | 2670 | 10 | 14 | 192.857143 |
| 2150 | 22 | 12 | 181.666667 | 2680 | 9 | 14 | 193.571429 |
| 2160 | 21 | 12 | 182.500000 | 2690 | 8 | 14 | 194.285714 |
| 2170 | 20 | 12 | 183.333333 | 2700 | 27 | 15 | 182.000000 |
| 2180 | 19 | 12 | 184.166667 | 2710 | 26 | 15 | 182.666667 |
| 2190 | 18 | 12 | 185.000000 | 2720 | 25 | 15 | 183.333333 |
| 2200 | 17 | 12 | 185.833333 | 2730 | 24 | 15 | 184.000000 |
| 2210 | 16 | 12 | 186.666667 | 2740 | 23 | 15 | 184.666667 |
| 2220 | 15 | 12 | 187.500000 | 2750 | 22 | 15 | 185.333333 |
| 2230 | 14 | 12 | 188.333333 | 2760 | 21 | 15 | 186.000000 |
| 2240 | 13 | 12 | 189.166667 | 2770 | 20 | 15 | 186.666667 |
| 2250 | 12 | 12 | 190.000000 | 2780 | 19 | 15 | 187.333333 |
| 2260 | 11 | 12 | 190.833333 | 2790 | 18 | 15 | 188.000000 |
| 2270 | 10 | 12 | 191.666667 | 2800 | 17 | 15 | 188.666667 |
| 2280 | 9 | 12 | 192.500000 | 2810 | 16 | 15 | 189.333333 |
| 2290 | 8 | 12 | 193.333333 | 2820 | 15 | 15 | 190.000000 |
| 2300 | 27 | 13 | 179.230769 | 2830 | 14 | 15 | 190.666667 |
| 2310 | 26 | 13 | 180.000000 | 2840 | 13 | 15 | 191.333333 |
| 2320 | 25 | 13 | 180.769231 | 2850 | 12 | 15 | 192.000000 |
| 2330 | 24 | 13 | 181.538462 | 2860 | 11 | 15 | 192.666667 |
| 2340 | 23 | 13 | 182.307692 | 2870 | 10 | 15 | 193.333333 |
| 2350 | 22 | 13 | 183.076923 | 2880 | 9 | 15 | 194.000000 |
| 2360 | 21 | 13 | 183.846154 | 2890 | 8 | 15 | 194.666667 |
| 2370 | 20 | 13 | 184.615385 | 2900 | 27 | 16 | 183.125000 |
| 2380 | 19 | 13 | 185.384615 | 2910 | 26 | 16 | 183.750000 |
| 2390 | 18 | 13 | 186.153846 | 2920 | 25 | 16 | 184.375000 |
| 2400 | 17 | 13 | 186.923077 | 2930 | 24 | 16 | 185.000000 |
| 2410 | 16 | 13 | 187.692308 | 2940 | 23 | 16 | 185.625000 |
| 2420 | 15 | 13 | 188.461538 | 2950 | 22 | 16 | 186.250000 |
| 2430 | 14 | 13 | 189.230769 | 2960 | 21 | 16 | 186.875000 |
| 2440 | 13 | 13 | 190.000000 | 2970 | 20 | 16 | 187.500000 |
| 2450 | 12 | 13 | 190.769231 | 2980 | 19 | 16 | 188.125000 |
| 2460 | 11 | 13 | 191.538462 | 2990 | 18 | 16 | 188.750000 |
| 2470 | 10 | 13 | 192.307692 | 3000 | 17 | 16 | 189.375000 |
| 2480 | 9 | 13 | 193.076923 | 3010 | 16 | 16 | 190.000000 |
| 2490 | 8 | 13 | 193.846154 | 3020 | 15 | 16 | 190.625000 |
| 2500 | 27 | 14 | 180.714286 | 3030 | 14 | 16 | 191.250000 |
| 2510 | 26 | 14 | 181.428571 | 3040 | 13 | 16 | 191.875000 |
| 2520 | 25 | 14 | 182.142857 | 3050 | 12 | 16 | 192.500000 |



www.valuetronics.com

Table 8-5. Listing of all M and N Numbers and Resulting Frequencies (2 of 5)

| Freq. MHz | M | N | M/N MHz | Freq. MHz | M | N | M/N MHz |
|---|---|---|---|---|---|---|---|
| 3060 | 11 | 16 | 193.125000 | 3590 | 18 | 19 | 190.526316 |
| 3070 | 10 | 16 | 193.750000 | 3600 | 17 | 19 | 191.052632 |
| 3080 | 9 | 16 | 194.375000 | 3610 | 16 | 19 | 191.578947 |
| 3090 | 8 | 16 | 195.000000 | 3620 | 15 | 19 | 192.105263 |
| 3100 | 27 | 17 | 184.117647 | 3630 | 14 | 19 | 192.631579 |
| 3110 | 26 | 17 | 184.705882 | 3640 | 13 | 19 | 193.157895 |
| 3120 | 25 | 17 | 185.294118 | 3650 | 12 | 19 | 193.684211 |
| 3130 | 24 | 17 | 185.882353 | 3660 | 11 | 19 | 194.210526 |
| 3140 | 23 | 17 | 186.470588 | 3670 | 10 | 19 | 194.736842 |
| 3150 | 22 | 17 | 187.058824 | 3680 | 9 | 19 | 195.263158 |
| 3160 | 21 | 17 | 187.647059 | 3690 | 8 | 19 | 195.789474 |
| 3170 | 20 | 17 | 188.235294 | 3700 | 27 | 20 | 186.500000 |
| 3180 | 19 | 17 | 188.823529 | 3710 | 26 | 20 | 187.000000 |
| 3190 | 18 | 17 | 189.411765 | 3720 | 25 | 20 | 187.500000 |
| 3200 | 17 | 17 | 190.000000 | 3730 | 24 | 20 | 188.000000 |
| 3210 | 16 | 17 | 190.588235 | 3740 | 23 | 20 | 188.500000 |
| 3220 | 15 | 17 | 191.176471 | 3750 | 22 | 20 | 189.000000 |
| 3230 | 14 | 17 | 191.764706 | 3760 | 21 | 20 | 189.500000 |
| 3240 | 13 | 17 | 192.352941 | 3770 | 20 | 20 | 190.000000 |
| 3250 | 12 | 17 | 192.941176 | 3780 | 19 | 20 | 190.500000 |
| 3260 | 11 | 17 | 193.529412 | 3790 | 18 | 20 | 191.000000 |
| 3270 | 10 | 17 | 194.117647 | 3800 | 17 | 20 | 191.500000 |
| 3280 | 9 | 17 | 194.705882 | 3810 | 16 | 20 | 192.000000 |
| 3290 | 8 | 17 | 195.294118 | 3820 | 15 | 20 | 192.500000 |
| 3300 | 27 | 18 | 185.000000 | 3830 | 14 | 20 | 193.000000 |
| 3310 | 26 | 18 | 185.555556 | 3840 | 13 | 20 | 193.500000 |
| 3320 | 25 | 18 | 186.111111 | 3850 | 12 | 20 | 194.000000 |
| 3330 | 24 | 18 | 186.666667 | 3860 | 11 | 20 | 194.500000 |
| 3340 | 23 | 18 | 187.222222 | 3870 | 10 | 20 | 195.000000 |
| 3350 | 22 | 18 | 187.777778 | 3880 | 9 | 20 | 195.500000 |
| 3360 | 21 | 18 | 188.333333 | 3890 | 8 | 20 | 196.000000 |
| 3370 | 20 | 18 | 188.888889 | 3900 | 27 | 21 | 187.142857 |
| 3380 | 19 | 18 | 189.444444 | 3910 | 26 | 21 | 187.619048 |
| 3390 | 18 | 18 | 190.000000 | 3920 | 25 | 21 | 188.095238 |
| 3400 | 17 | 18 | 190.555556 | 3930 | 24 | 21 | 188.571429 |
| 3410 | 16 | 18 | 191.111111 | 3940 | 23 | 21 | 189.047619 |
| 3420 | 15 | 18 | 191 666667 | 3950 | 22 | 21 | 189.523810 |
| 3430 | 14 | 18 | 192.222222 | 3960 | 21 | 21 | 190.000000 |
| 3440 | 13 | 18 | 192.777778 | 3970 | 20 | 21 | 190.476190 |
| 3450 | 12 | 18 | 193.333333 | 3980 | 19 | 21 | 190.952381 |
| 3460 | 11 | 18 | 193.888889 | 3990 | 18 | 21 | 191.428571 |
| 3470 | 10 | 18 | 194.444444 | 4000 | 17 | 21 | 191.904762 |
| 3480 | 9 | 18 | 195.000000 | 4010 | 16 | 21 | 192.380952 |
| 3490 | 8 | 18 | 195.555556 | 4020 | 15 | 21 | 192.857143 |
| 3500 | 27 | 19 | 185.789474 | 4030 | 14 | 21 | 193.333333 |
| 3510 | 26 | 19 | 186.315789 | 4040 | 13 | 21 | 193.809524 |
| 3520 | 25 | 19 | 186.842105 | 4050 | 12 | 21 | 194.285714 |
| 3530 | 24 | 19 | 187.368421 | 4060 | 11 | 21 | 194.761905 |
| 3540 | 23 | 19 | 187.894737 | 4070 | 10 | 21 | 195.238095 |
| 3550 | 22 | 19 | 188.421053 | 4080 | 9 | 21 | 195.714286 |
| 3560 | 21 | 19 | 188.947368 | 4090 | 8 | 21 | 196.190476 |
| 3570 | 20 | 19 | 189.473684 | 4100 | 27 | 22 | 187.727273 |
| 3580 | 19 | 19 | 190.000000 | 4110 | 26 | 22 | 188.181818 |



www.valuetronics.com

Table 8-5. Listing of all M and N Numbers and Resulting Frequencies (3 of 5)

| Freq. MHz | M | N | M/N MHz | Freq. MHz | M | N | M/N MHz |
|---|---|---|---|---|---|---|---|
| 4120 | 25 | 22 | 188.636364 | 4650 | 12 | 24 | 195.000000 |
| 4130 | 24 | 22 | 189.090909 | 4660 | 11 | 24 | 195.416667 |
| 4140 | 23 | 22 | 189.545455 | 4670 | 10 | 24 | 195.833333 |
| 4150 | 22 | 22 | 190.000000 | 4680 | 9 | 24 | 196.250000 |
| 4160 | 21 | 22 | 190.454545 | 4690 | 8 | 24 | 196.666667 |
| 4170 | 20 | 22 | 190.909091 | 4700 | 27 | 25 | 189.200000 |
| 4180 | 19 | 22 | 191.363636 | 4710 | 26 | 25 | 189.600000 |
| 4190 | 18 | 22 | 191.818182 | 4720 | 25 | 25 | 190.000000 |
| 4200 | 17 | 22 | 192.272727 | 4730 | 24 | 25 | 190.400000 |
| 4210 | 16 | 22 | 192.727273 | 4740 | 23 | 25 | 190.800000 |
| 4220 | 15 | 22 | 193.181818 | 4750 | 22 | 25 | 191.200000 |
| 4230 | 14 | 22 | 193.636364 | 4760 | 21 | 25 | 191.600000 |
| 4240 | 13 | 22 | 194.090909 | 4770 | 20 | 25 | 192.000000 |
| 4250 | 12 | 22 | 194.545455 | 4780 | 19 | 25 | 192.400000 |
| 4260 | 11 | 22 | 195.000000 | 4790 | 18 | 25 | 192.800000 |
| 4270 | 10 | 22 | 195.454545 | 4800 | 17 | 25 | 193.200000 |
| 4280 | 9 | 22 | 195.909091 | 4810 | 16 | 25 | 193.600000 |
| 4290 | 8 | 22 | 196.363636 | 4820 | 15 | 25 | 194.000000 |
| 4300 | 27 | 23 | 188.260870 | 4830 | 14 | 25 | 194.400000 |
| 4310 | 26 | 23 | 188.695652 | 4840 | 13 | 25 | 194.800000 |
| 4320 | 25 | 23 | 189.130435 | 4850 | 12 | 25 | 195.200000 |
| 4330 | 24 | 23 | 189.565217 | 4860 | 11 | 25 | 195.600000 |
| 4340 | 23 | 23 | 190.000000 | 4870 | 10 | 25 | 196.000000 |
| 4350 | 22 | 23 | 190.434783 | 4880 | 9 | 25 | 196.400000 |
| 4360 | 21 | 23 | 190.869565 | 4890 | 8 | 25 | 196.800000 |
| 4370 | 20 | 23 | 191.304348 | 4900 | 27 | 26 | 189.615385 |
| 4380 | 19 | 23 | 191.739130 | 4910 | 26 | 26 | 190.000000 |
| 4390 | 18 | 23 | 192.173913 | 4920 | 25 | 26 | 190.384615 |
| 4400 | 17 | 23 | 192.608696 | 4930 | 24 | 26 | 190.769231 |
| 4410 | 16 | 23 | 193.043478 | 4940 | 23 | 26 | 191.153846 |
| 4420 | 15 | 23 | 193.478261 | 4950 | 22 | 26 | 191.538462 |
| 4430 | 14 | 23 | 193.913043 | 4960 | 21 | 26 | 191.923077 |
| 4440 | 13 | 23 | 194.347826 | 4970 | 20 | 26 | 192.307692 |
| 4450 | 12 | 23 | 194.782609 | 4980 | 19 | 26 | 192.692308 |
| 4460 | 11 | 23 | 195.217391 | 4990 | 18 | 26 | 193.076923 |
| 4470 | 10 | 23 | 195.652174 | 5000 | 17 | 26 | 193.461538 |
| 4480 | 9 | 23 | 196.086957 | 5010 | 16 | 26 | 193.846154 |
| 4490 | 8 | 23 | 196.521739 | 5020 | 15 | 26 | 194.230769 |
| 4500 | 27 | 24 | 188.750000 | 5030 | 14 | 26 | 194.615385 |
| 4510 | 26 | 24 | 189.166667 | 5040 | 13 | 26 | 195.000000 |
| 4520 | 25 | 24 | 189.583333 | 5050 | 12 | 26 | 195.384615 |
| 4530 | 24 | 24 | 190.000000 | 5060 | 11 | 26 | 195.769231 |
| 4540 | 23 | 24 | 190.416667 | 5070 | 10 | 26 | 196.153846 |
| 4550 | 22 | 24 | 190.833333 | 5080 | 9 | 26 | 196.538462 |
| 4560 | 21 | 24 | 191.250000 | 5090 | 8 | 26 | 196.923077 |
| 4570 | 20 | 24 | 191.666667 | 5100 | 27 | 27 | 190.000000 |
| 4580 | 19 | 24 | 192.083333 | 5110 | 26 | 27 | 190.370370 |
| 4590 | 18 | 24 | 192.500000 | 5120 | 25 | 27 | 190.740741 |
| 4600 | 17 | 24 | 192.916667 | 5130 | 24 | 27 | 191.111111 |
| 4610 | 16 | 24 | 193.333333 | 5140 | 23 | 27 | 191.481481 |
| 4620 | 15 | 24 | 193.750000 | 5150 | 22 | 27 | 191.851852 |
| 4630 | 14 | 24 | 194.166667 | 5160 | 21 | 27 | 192.222222 |
| 4640 | 13 | 24 | 194.583333 | 5170 | 20 | 27 | 192.592593 |



www.valuetronics.com

Table 8-5. Listing of all M and N Numbers and Resulting Frequencies (4 of 5)

| Freq. MHz | M | N | M/N MHz | Freq. MHz | M | N | M/N MHz |
|---|---|---|---|---|---|---|---|
| 5180 | 19 | 27 | 192.962963 | 5710 | 26 | 30 | 191.333333 |
| 5190 | 18 | 27 | 193.333333 | 5720 | 25 | 30 | 191.666667 |
| 5200 | 17 | 27 | 193.703704 | 5730 | 24 | 30 | 192.000000 |
| 5210 | 16 | 27 | 194.074074 | 5740 | 23 | 30 | 192.333333 |
| 5220 | 15 | 27 | 194.444444 | 5750 | 22 | 30 | 192.666667 |
| 5230 | 14 | 27 | 194.814815 | 5760 | 21 | 30 | 193.000000 |
| 5240 | 13 | 27 | 195.185185 | 5770 | 20 | 30 | 193.333333 |
| 5250 | 12 | 27 | 195.555556 | 5780 | 19 | 30 | 193.666667 |
| 5260 | 11 | 27 | 195.925926 | 5790 | 18 | 30 | 194.000000 |
| 5270 | 10 | 27 | 196.296296 | 5800 | 17 | 30 | 194.333333 |
| 5280 | 9 | 27 | 196.666667 | 5810 | 16 | 30 | 194.666667 |
| 5290 | 8 | 27 | 197.037037 | 5820 | 15 | 30 | 195.000000 |
| 5300 | 27 | 28 | 190.357143 | 5830 | 14 | 30 | 195.333333 |
| 5310 | 26 | 28 | 190.714286 | 5840 | 13 | 30 | 195.666667 |
| 5320 | 25 | 28 | 191.071429 | 5850 | 12 | 30 | 196.000000 |
| 5330 | 24 | 28 | 191.428571 | 5860 | 11 | 30 | 196.333333 |
| 5340 | 23 | 28 | 191.785714 | 5870 | 10 | 30 | 196.666667 |
| 5350 | 22 | 28 | 192.142857 | 5880 | 9 | 30 | 197.000000 |
| 5360 | 21 | 28 | 192.500000 | 5890 | 8 | 30 | 197.333333 |
| 5370 | 20 | 28 | 192.857143 | 5900 | 27 | 31 | 191.290323 |
| 5380 | 19 | 28 | 193.214286 | 5910 | 26 | 31 | 191.612903 |
| 5390 | 18 | 28 | 193.571429 | 5920 | 25 | 31 | 191.935484 |
| 5400 | 17 | 28 | 193.928571 | 5930 | 24 | 31 | 192.258065 |
| 5410 | 16 | 28 | 194.285714 | 5940 | 23 | 31 | 192.580645 |
| 5420 | 15 | 28 | 194.642857 | 5950 | 22 | 31 | 192.903226 |
| 5430 | 14 | 28 | 195.000000 | 5960 | 21 | 31 | 193.225806 |
| 5440 | 13 | 28 | 195.357143 | 5970 | 20 | 31 | 193.548387 |
| 5450 | 12 | 28 | 195.714286 | 5980 | 19 | 31 | 193.870968 |
| 5460 | 11 | 28 | 196.071429 | 5990 | 18 | 31 | 194.193548 |
| 5470 | 10 | 28 | 196.428571 | 6000 | 17 | 31 | 194.516129 |
| 5480 | 9 | 28 | 196.785714 | 6010 | 16 | 31 | 194.838710 |
| 5490 | 8 | 28 | 197.142857 | 6020 | 15 | 31 | 195.161290 |
| 5500 | 27 | 29 | 190.689655 | 6030 | 14 | 31 | 195.483871 |
| 5510 | 26 | 29 | 191.034483 | 6040 | 13 | 31 | 195.806452 |
| 5520 | 25 | 29 | 191.379310 | 6050 | 12 | 31 | 196.129032 |
| 5530 | 24 | 29 | 191.724138 | 6060 | 11 | 31 | 196.451613 |
| 5540 | 23 | 29 | 192 068966 | 6070 | 10 | 31 | 196.774194 |
| 5550 | 22 | 29 | 192.413793 | 6080 | 9 | 31 | 197.096774 |
| 5560 | 21 | 29 | 192.758621 | 6090 | 8 | 31 | 197.419355 |
| 5570 | 20 | 29 | 193.103448 | 6100 | 27 | 32 | 191.562500 |
| 5580 | 19 | 29 | 193.448276 | 6110 | 26 | 32 | 191.875000 |
| 5590 | 18 | 29 | 193.793103 | 6120 | 25 | 32 | 192.187500 |
| 5600 | 17 | 29 | 194.137931 | 6130 | 24 | 32 | 192.500000 |
| 5610 | 16 | 29 | 194.482759 | 6140 | 23 | 32 | 192.812500 |
| 5620 | 15 | 29 | 194.827586 | 6150 | 22 | 32 | 193.125000 |
| 5630 | 14 | 29 | 195.172414 | 6160 | 21 | 32 | 193.437500 |
| 5640 | 13 | 29 | 195.517241 | 6170 | 20 | 32 | 193.750000 |
| 5650 | 12 | 29 | 195.862069 | 6180 | 19 | 32 | 194.062500 |
| 5660 | 11 | 29 | 196.206897 | 6190 | 18 | 32 | 194.375000 |
| 5670 | 10 | 29 | 196.551724 | | | | |
| 5680 | 9 | 29 | 196.896552 | | | | |
| 5690 | 8 | 29 | 197.241379 | | | | |
| 5700 | 27 | 30 | 191.000000 | | | | |



www.valuetronics.com

Table 8-5. Listing of all M and N Numbers and Resulting Frequencies (5 of 5)

| Freq. MHz | M | N | M/N MHz | Freq. MHz | M | N | M/N MHz |
|---|---|---|---|---|---|---|---|
| 6200 | 17 | 32 | 194.687500 | 6400 | 17 | 33 | 194.848485 |
| 6210 | 16 | 32 | 195.000000 | 6410 | 16 | 33 | 195.151515 |
| 6220 | 15 | 32 | 195.312500 | 6420 | 15 | 33 | 195.454545 |
| 6230 | 14 | 32 | 195.625000 | 6430 | 14 | 33 | 195.757576 |
| 6240 | 13 | 32 | 195.937500 | 6440 | 13 | 33 | 196.060606 |
| 6250 | 12 | 32 | 196.250000 | 6450 | 12 | 33 | 196.363636 |
| 6260 | 11 | 32 | 196.562500 | 6460 | 11 | 33 | 196.666667 |
| 6270 | 10 | 32 | 196.875000 | 6470 | 10 | 33 | 196.969697 |
| 6280 | 9 | 32 | 197.187500 | 6480 | 9 | 33 | 197.272727 |
| 6290 | 8 | 32 | 197.500000 | 6490 | 8 | 33 | 197.575758 |
| 6300 | 27 | 33 | 191.818182 | 6500 | 27 | 34 | 192.058824 |
| 6310 | 26 | 33 | 192.121212 | 6510 | 26 | 34 | 192.352941 |
| 6320 | 25 | 33 | 192.424242 | 6520 | 25 | 34 | 192.647059 |
| 6330 | 24 | 33 | 192.727273 | 6530 | 24 | 34 | 192.941176 |
| 6340 | 23 | 33 | 193.030303 | 6540 | 23 | 34 | 193.235294 |
| 6350 | 22 | 33 | 193.333333 | 6550 | 22 | 34 | 193.529412 |
| 6360 | 21 | 33 | 193.636364 | 6560 | 21 | 34 | 193.823529 |
| 6370 | 20 | 33 | 193.939394 | 6570 | 20 | 34 | 194.117647 |
| 6380 | 19 | 33 | 194.242424 | 6580 | 19 | 34 | 194.411765 |
| 6390 | 18 | 33 | 194.545455 | 6590 | 18 | 34 | 194.705882 |



www.valuetronics.com

## SERVICE SHEET BD3 (cont'd)

## TROUBLESHOOTING

### General

It is assumed that the troubleshooting information associated with Service Sheet BD1 was used to isolate the problem to either or both of the following:

- Low Frequency Source (LFS) Loop
- M/N Loop

The following troubleshooting procedures can be used to further isolate the problem to one of the following subassemblies:

LFS Loop
- 20/30 Divider
- 20/30 Phase Detector
- VCO 160—240 MHz

M/N Loop
- M/N Phase Detector
- M/N VCO
- M/N Output

### Test Equipment Required

Frequency Counter .... HP5343A
Oscilloscope .....HP1980A/B-811/860
Digital Voltmeter .....HP3456A

The following procedures are divided into ten checks, as follows:

LFS Loop Checks

10 MHz Reference Check (✓1)

20/30 Divider Check (✓2)

160—240 MHz VCO Check (✓3)

20/30 Phase Detector Check (✓4)

M/N Loop Checks

20 MHz Reference Check (✓5)

400 MHz Reference Check (✓6)

M/N Phase Detector Check (✓7)

200 kHz Filter Check (✓8)

M/N VCO Check (✓9)

M/N Output Check (✓10)

### LFS Loop Checks.

10 MHz Reference Checks (✓1)

1. Remove blue cable (6) from J1 of A2A13 motherboard and connect it to the counter.

   The frequency should be 10 MHz ±30 Hz.

   If the frequency is correct, proceed with Step 2.

   If the frequency is not correct, the Reference Loop is faulty. Proceed to Service Sheet 2 to troubleshoot the Reference Loop.

20/30 Divider Check (✓2)

2. Replace the blue cable on A2A13J1 and connect the oscilloscope to A2A5TP2, 80 kHz REF.

   The waveform should be as shown in Figure 8-28.

   If the waveform is as shown, proceed with step 3.

   If the waveform is not as shown, the divide by 125 divider chain on A2A5 is faulty. Proceed to Service Sheet 6 for troubleshooting.

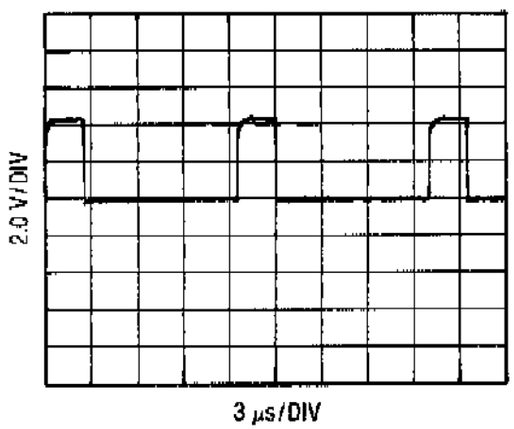


**Figure 8-28. 80 kHz Reference, A2A5TP2**

3. Remove A2A3, set the Test Switch to TEST HIGH FREQ, and replace A2A3. This opens the LFS loop by placing a fixed voltage on the VCO input.

4. Press RCL 0 and connect the oscilloscope to A2A5TP3. The waveform should be as shown in Figure 8-29.

   If the waveform is as shown, proceed with Step 9. If the waveform is not as shown, proceed with Step 5 to see if the problem is with 20/30 Divider A2A5 or with faulty inputs from the DCU.



www.valuetronics.com

## SERVICE SHEET BD3 (cont'd)

**Table 8-6. LFS 1K—8M Inputs**

| Freq. GHz | XA2A5- | | | | | | | | | | | | | | | |
|---|---|---|---|---|---|---|---|---|---|---|---|---|---|---|---|---|
| | 11 | 12 | 13 | 14 | 15 | 16 | 17 | 18 | 29 | 30 | 31 | 32 | 33 | 34 | 35 | 36 |
| 3.339999 | 1 | 0 | 0 | 1 | 1 | 0 | 0 | 1 | 1 | 0 | 0 | 1 | 1 | 0 | 0 | 1 |
| 3.336666 | 0 | 1 | 1 | 0 | 0 | 1 | 1 | 0 | 0 | 1 | 1 | 0 | 0 | 1 | 1 | 0 |

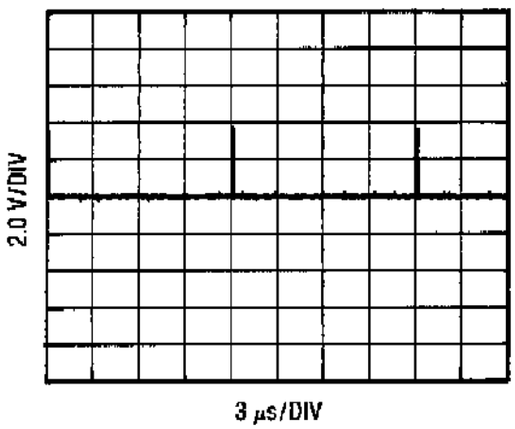


**Figure 8-29. A2A5TP3, A2A3 Test Switch HIGH**

5. Remove A2A5 and replace it on an extender card.

6. Set the Signal Generator to the Frequencies shown in Table 8-6, and check the input pins for the logic levels given.

   If all the input pins are correct, then 20/30 Divider A2A5 is defective. Go to Service Sheet 6 to isolate the problem.

   If any of the pins are incorrect, the appropriate output pins on Frequency Output-HP-IB Card A2A9 should be checked to insure that the problem is not on the mother board. Proceed with Step 7.

7. Remove A2A9 and replace it on the special extender card (P/N 11726-60002). (Two 36 pin and one 30 pin extender card may be used if the special card is not available.)

8. Set the Signal Generator to the frequencies shown in the Table 8-7 and check the input pins for the logic levels given.

   If all the pins are correct, there is a problem in the motherboard between A2A9 and A2A5.

   If any of the pins are incorrect, the problem is in A2A9. Proceed to Service Sheet 29 to isolate the problem.

VCO Check (V3)

Initial Conditions: A2A3 Test Switch set to TEST HIGH FREQ.

9. Disconnect the red cable (2) from A2A3J2 160-240 MHz OUTPUT (TPA) and connect the frequency counter in its place.

   The frequency should be greater than 240 MHz.

   If the frequency is correct, proceed with step 10.

   If the frequency is not correct, A2A3 is faulty, go to Service Sheet 8 to isolate the problem.

**Table 8-7. LFS 1K—8M Inputs**

| Freq. GHz | XA9B- | | | | | | | | | | XA9A- | | | | | |
|---|---|---|---|---|---|---|---|---|---|---|---|---|---|---|---|---|
| | 2 | 3 | 4 | 5 | 6 | 11 | 20 | 21 | 22 | 23 | 21 | 22 | 31 | 32 | 33 | 34 |
| 3.339999 | 0 | 0 | 1 | 0 | 1 | 1 | 1 | 0 | 0 | 1 | 1 | 0 | 1 | 0 | 0 | 1 |
| 3.336666 | 1 | 1 | 0 | 1 | 0 | 0 | 0 | 1 | 1 | 0 | 0 | 1 | 0 | 1 | 1 | 0 |



www.valuetronics.com

**SERVICE SHEET BD3 (cont'd)**

10. Remove A2A3, set the Test Switch to TEST LO FREQ, and replace A2A3, then recheck the counter display.

    The frequency should be less than 160 MHz.

    If the frequency is correct, reconnect the red cable (2) to A2A3J2 and proceed with step 11.

    If the frequency is not correct, A2A3 is faulty, go to Service Sheet 8 to isolate the problem.

11. Disconnect the green cable (5) from A2A3J1 (TPG) and connect the frequency counter in its place.

    The frequency should be less then 20 MHz.

    If the frequency is correct, proceed with Step 12.

    If the frequency is not correct, A2A3 is faulty. Go to Service Sheet 8 to troubleshoot.

12. Remove A2A3, set the Test Switch to TEST HIGH FREQUENCY, and replace A2A3, then recheck the counter display.

    The frequency should be greater than 30 MHz.

    If the frequency is correct, reconnect the green cable and proceed with ☑4 20/30 Phase Detector Check beginning with Step 13.

    If the frequency is not correct, A2A3 is faulty. Go to Service Sheet 8 to troubleshoot.

20/30 Phase Detector Checks ☑4

Initial conditions: A2A3 Test Switch to TEST LO FREQ.

13. Connect the DVM to TP4 of A2A4.

    The voltage should be less than +4V.

    If the voltage is correct, proceed with Step 14. If the voltage is not correct, A2A4 is faulty, go to Service Sheet 7 to troubleshoot.

14. Remove A2A3, set the Test Switch to TEST HIGH FREQ, and replace A2A3, then recheck the DVM indication.

    The voltage should be more than 14 volts.

    If the voltage is correct, the LFS Loop is working normally. Remove A2A3, set the Test Switch to NORMAL, replace A2A3, and proceed with M/N Troubleshooting.

    If the voltage is not correct, A2A4 is faulty, go to Service Sheet 7 to troubleshoot.

**M/N Troubleshooting.**

20 MHz Reference Checks ☑5

1. Set Signal Generator for external reference and connect the frequency standard output from the frequency counter to A3J10 on the Signal Generator's rear panel.

2. Disconnect the grey/white (89) cable from A3A1A1J3 20 MHz OUT (TPF) and connect the counter in its place.

   The frequency should be 20 MHz ±one count.

   If the frequency is not correct, the problem is in Reference Phase Detector A3A1A1, Proceed to Service Sheet 2 to isolate the problem.

   If the frequency is correct, replace the grey/white cable (89) and proceed with Step 3.

400 MHz Reference Checks ☑6

Initial Conditions: Frequency counter connected to Signal Generator as in Step 1.

3. Remove the gray/red/white (829) cable from A3A1A5J1 400 MHz IN (TPD) and connect the cable to the counter.

4. The frequency should be 400 MHz ± one count.

   If the frequency is not correct, Reference Phase Detector A3A1A1 is at fault. Go to Service Sheet 2 to isolate the problem.

   If the frequency is correct, replace the gray/red/white cable and proceed with Step 5.

M/N Phase Detector Checks ☑7

5. Disconnect white/red cable (92) from A3A1A5J2 IF OUT (TPE).

6. Place A3A1A3 on an extender card and connect DVM to A3A1A3TP5.

   The voltage should be approximately −0.5V.

   If the voltage is correct, proceed with step 7.

   If the voltage is not correct, proceed with Step 9 to to check the M and N inputs to A3A1A3.



www.valuetronics.com

## SERVICE SHEET BD3 (cont'd)

7. Remove the gray/white (89) cable from the 20 MHz OUT connector of A3A1A1 and connect the white/red cable (92, (previously disconnected from the IF OUT connector of A3A1A5) in its place.

8. Connect the DVM to A3A1A3TP5. The voltage should be approximately −38V.

   If the voltage is correct, proceed with ☑8 200-MHz Filter Check, beginning with Step 11.

   If the voltage is not correct, proceed with Step 9 to see if the problem is on the Frequency Output-HP-IB board or the Mother Board.

9. Set the Signal Generator to each frequency shown in Table 8-8 and check for the corresponding logic level on each A3A1A3 input pin shown.

**Table 8-8. M1—M6 and N1—N5 Inputs**

| Freq. GHz | XA3A1A3- | | | | | | | | | | |
|---|---|---|---|---|---|---|---|---|---|---|---|
| | 8 | 9 | 10 | 13 | 14 | 15 | 23 | 24 | 25 | 28 | 29 |
| 6.590 | 0 | 0 | 0 | 0 | 0 | 1 | 1 | 1 | 0 | 1 | 0 |
| 5.640 | 1 | 1 | 1 | 1 | 1 | 0 | 0 | 0 | 1 | 0 | 1 |

   If all of the pins are correct, A3A1A3 is defective, proceed to Service Sheet 3 to isolate the problem.

   If any of the pins are incorrect, proceed with Step 10 to see if the problem is with the I/O card or the mother board.

10. Set the Signal Generator to each frequency shown in Table 8-9 and check for the corresponding logic level on each output pin shown.

**Table 8-9. M1—M6 and N1—N5 Outputs**

| Freq. GHz | XA9- | | | | | | | | | | |
|---|---|---|---|---|---|---|---|---|---|---|---|
| | 1 | 2 | 3 | 4 | 5 | 6 | 7 | 8 | 9 | 10 | 11 |
| 6.590 | 1 | 0 | 0 | 0 | 1 | 0 | 1 | 0 | 0 | 1 | 0 |
| 5.640 | 0 | 1 | 1 | 1 | 0 | 1 | 0 | 1 | 1 | 0 | 1 |

   If all the pins are correct, there is a problem with the Mother Board.

   If any of the pins are not correct, the problem is on Frequency Output-HB-IB card A2A9. Go to Service Sheet 29 to isolate the problem.

200 kHz Filter Checks ☑8

Initial Conditions: White/red cable (92) connected to 20 MHz OUT connector of A3A1A1.

11. Connect DVM to A3A1A4 TP1.

   The voltage should be approximately −38V.

   If the voltage is correct, proceed with Step 12.

   If the voltage is not correct, The Low Pass Filter on A3A1A5 is defective, proceed to Service Sheet 3 to troubleshoot.

M/N VCO Checks ☑9

Initial Conditions: White/red cable (92) connected to 20 MHz OUT connector of A3A1A1.

12. Place A3A1A5 on an extender card and disconnect the white cable (9) from the VCO from A3A1A5J4 (TPB).

13. Connect the white cable to the spectrum analyzer.

   The frequency should be approximately 396 MHz at a power level of at least 0 dBm.

   If the frequency and power are correct, leave the white cable connected to the spectrum analyzer and proceed with step 14.

   If the frequency and/or power is not correct, the VCO is either defective or requires adjustment. Proceed to the VCO adjustment procedure in Section V and attempt to adjust the VCO. If it cannot be adjusted, replace it.

14. Disconnect the white/red cable (92) from the 20 MHz OUT connector of A3A1A1 and connect the gray/white cable (89) in its place.

   The frequency should be approximately 342 MHz at a power level of at least 0 dBm.

   If the frequency and power are correct, reconnect the white cable to A3A1A5J4 and proceed with ☑10 M/N Output check beginning with Step 15.

   If the frequency and/or power is not correct, the VCO is either defective or requires adjust-



www.valuetronics.com

**SERVICE SHEET BD3 (cont'd)**

ment. Proceed to the VCO adjustment procedure in Section V and attempt to adjust the VCO. If it cannot be adjusted, replace it.

M/N Output Checks ☑10

15. Disconnect the white/orange (93) cable from A3A1A5J3 M/N OUT (TPC) and connect the counter in its place.

    The frequency should be approximately 171 MHz.

    If the frequency is correct, reconnect the white/orange cable to M/N out and proceed with step 16.

    If the frequency is not correct, A3A1A5 is defective, proceed to Service Sheet 5 to troubleshoot.

16. Connect the counter to A3A1A5J2 IF OUT (TPE).

    The frequency should be approximately 58 MHz.

    If the frequency is correct, the M/N loop is functioning normally.

    If the frequency is not correct, A3A1A5 is faulty. Proceed to Service Sheet 5 to troubleshoot.



www.valuetronics.com

FIG. 8-30
Sht 1 of 4

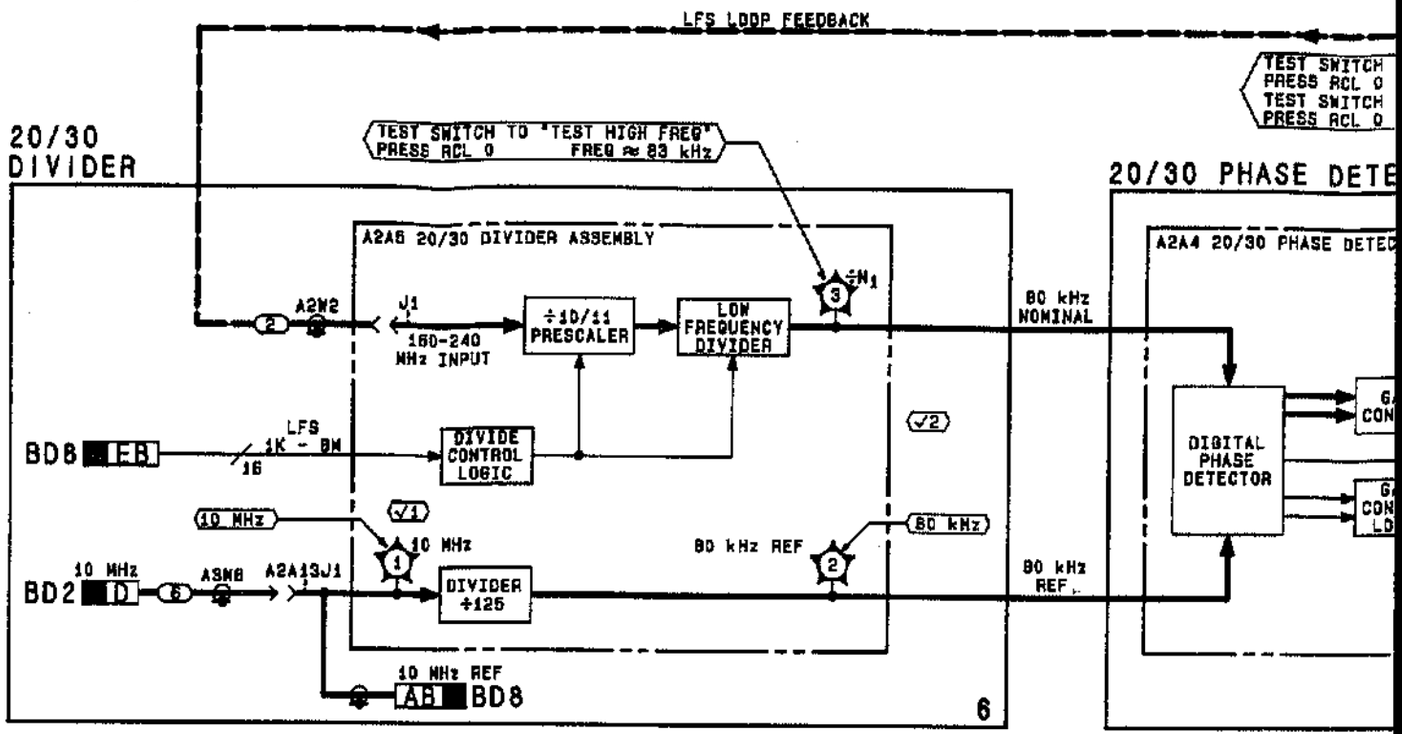


M/N PHASE DETECTOR

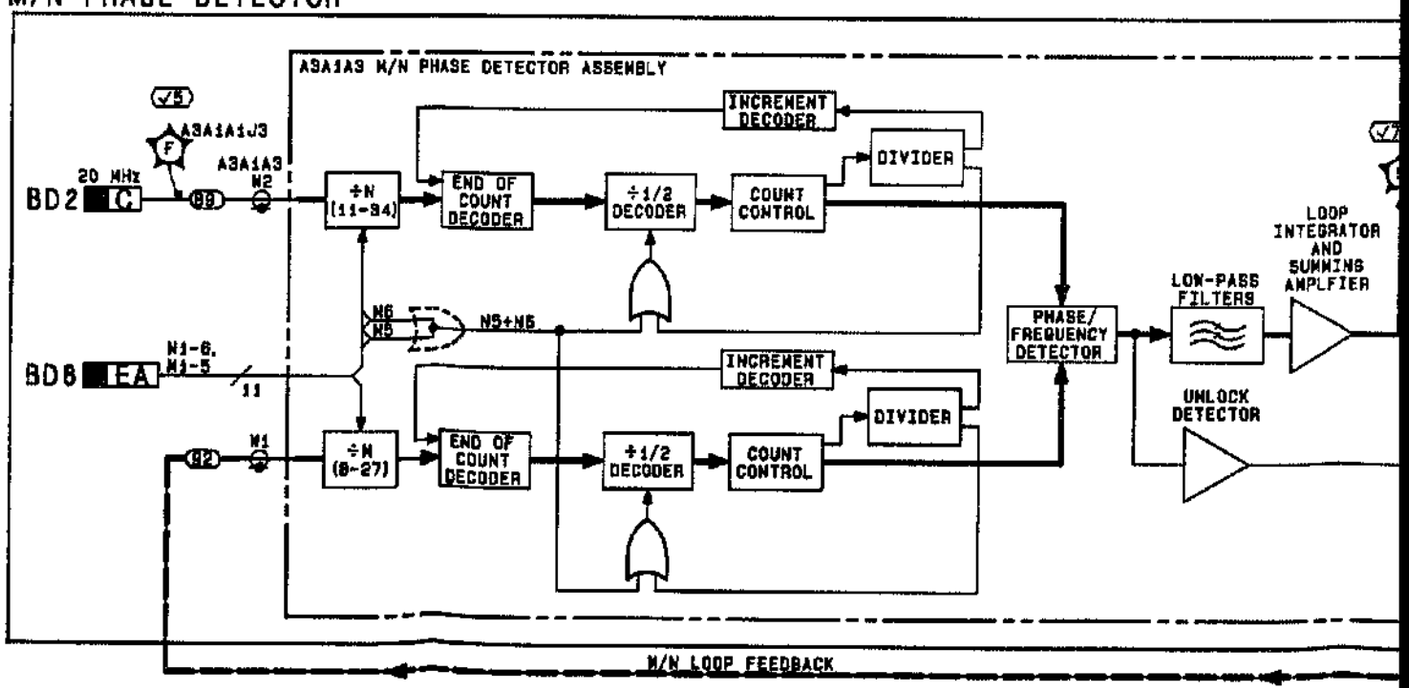


www.valuetronics.com

FIG. 8-30
Sht 2 of 4

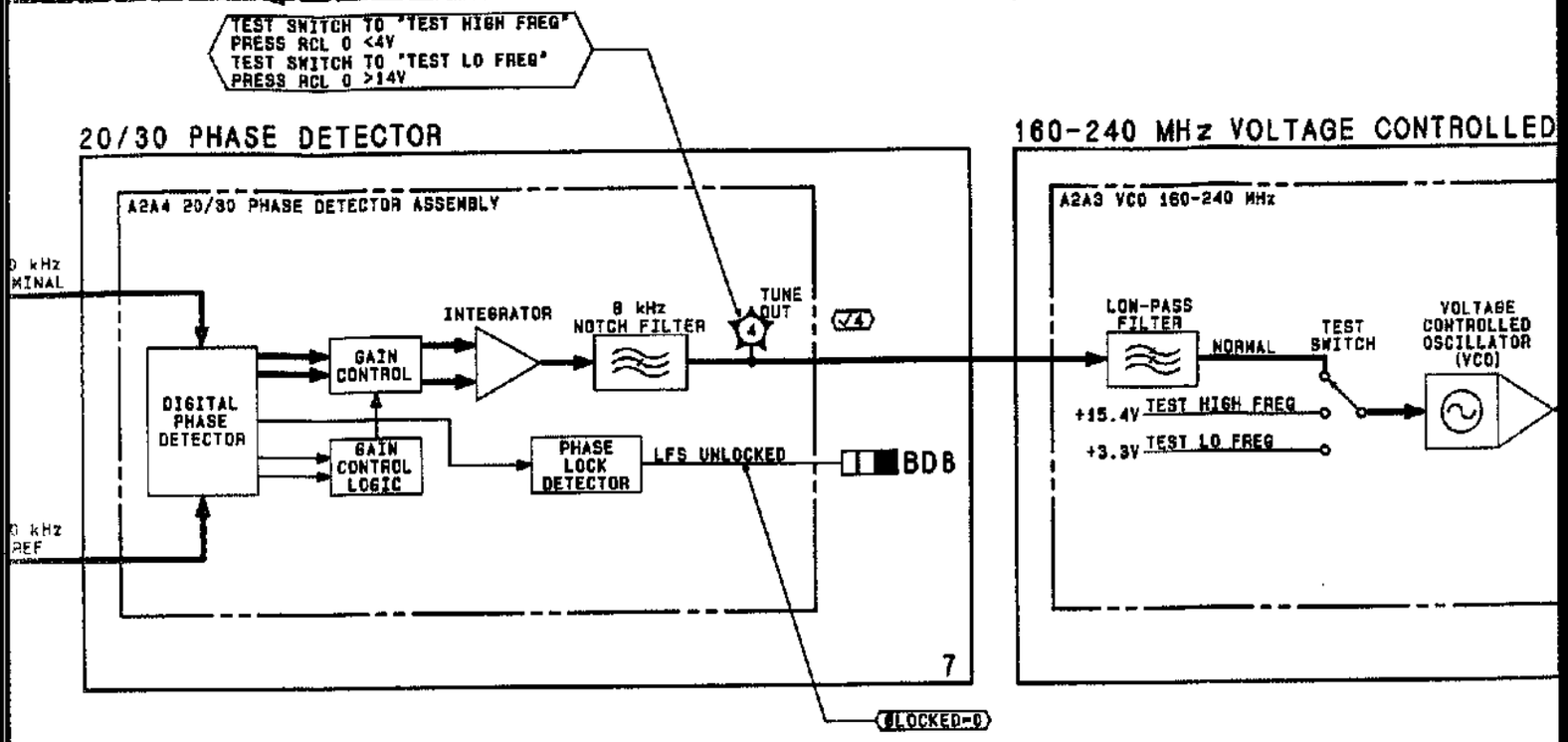


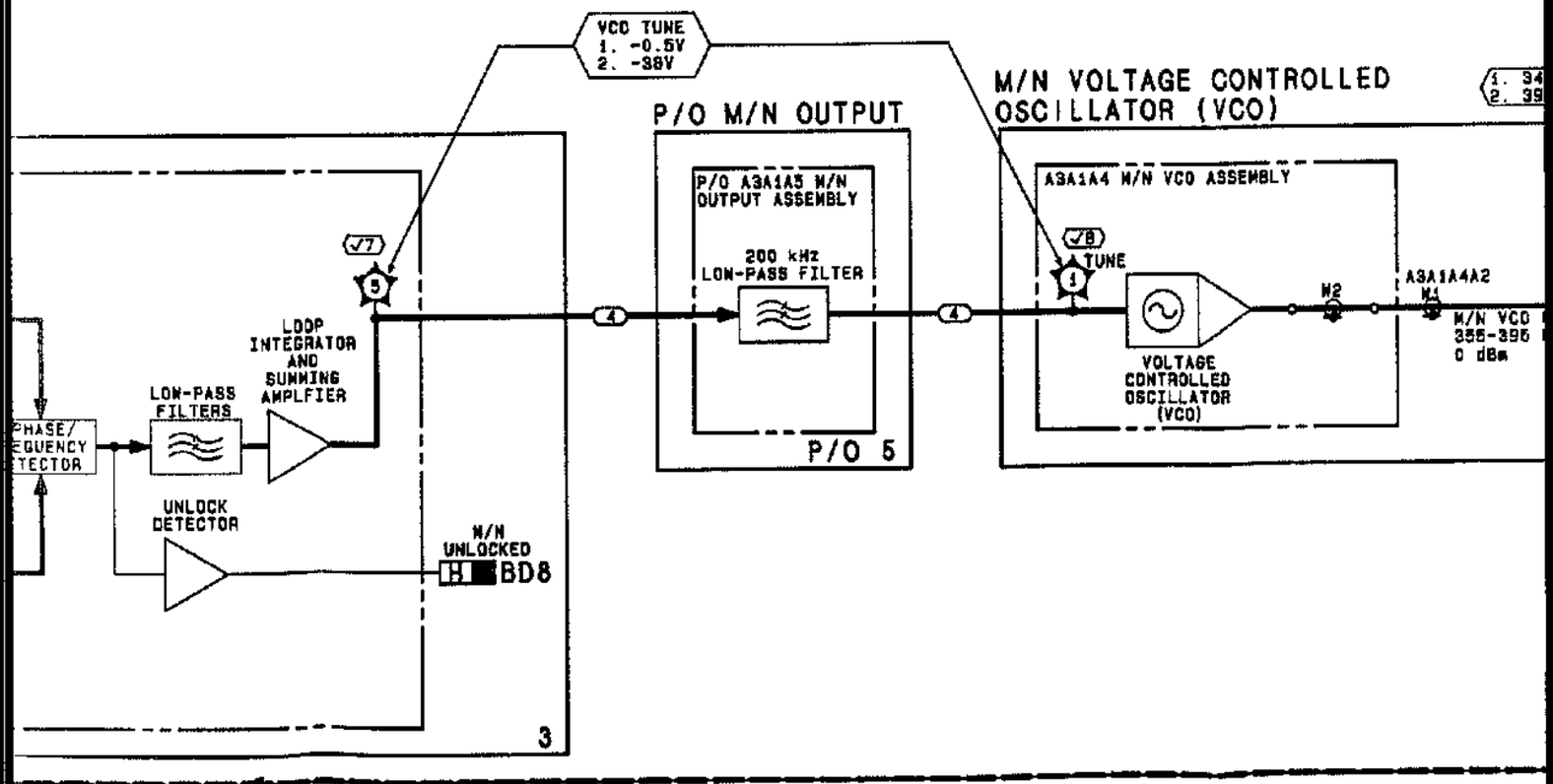


www.valuetronics.com

FIG. 8-30
Sht 3 of 4

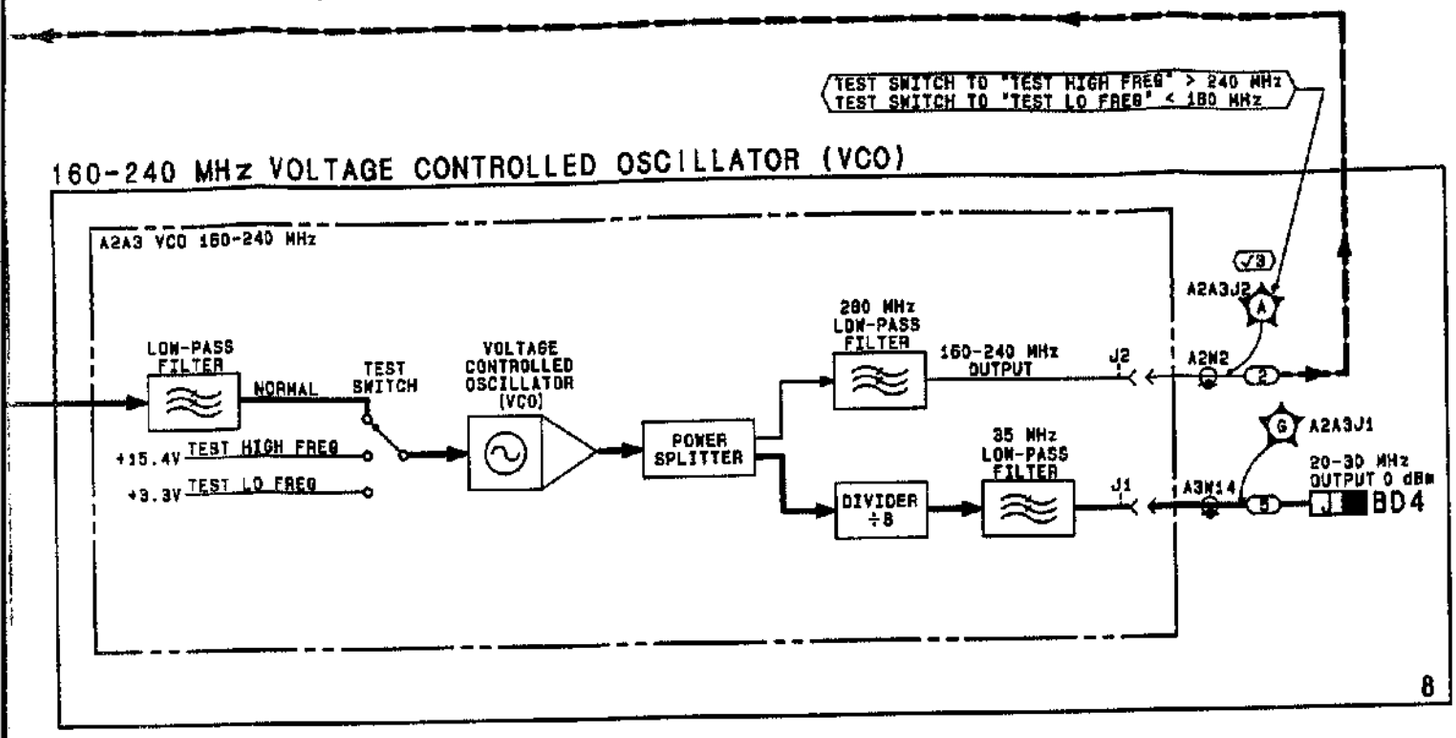


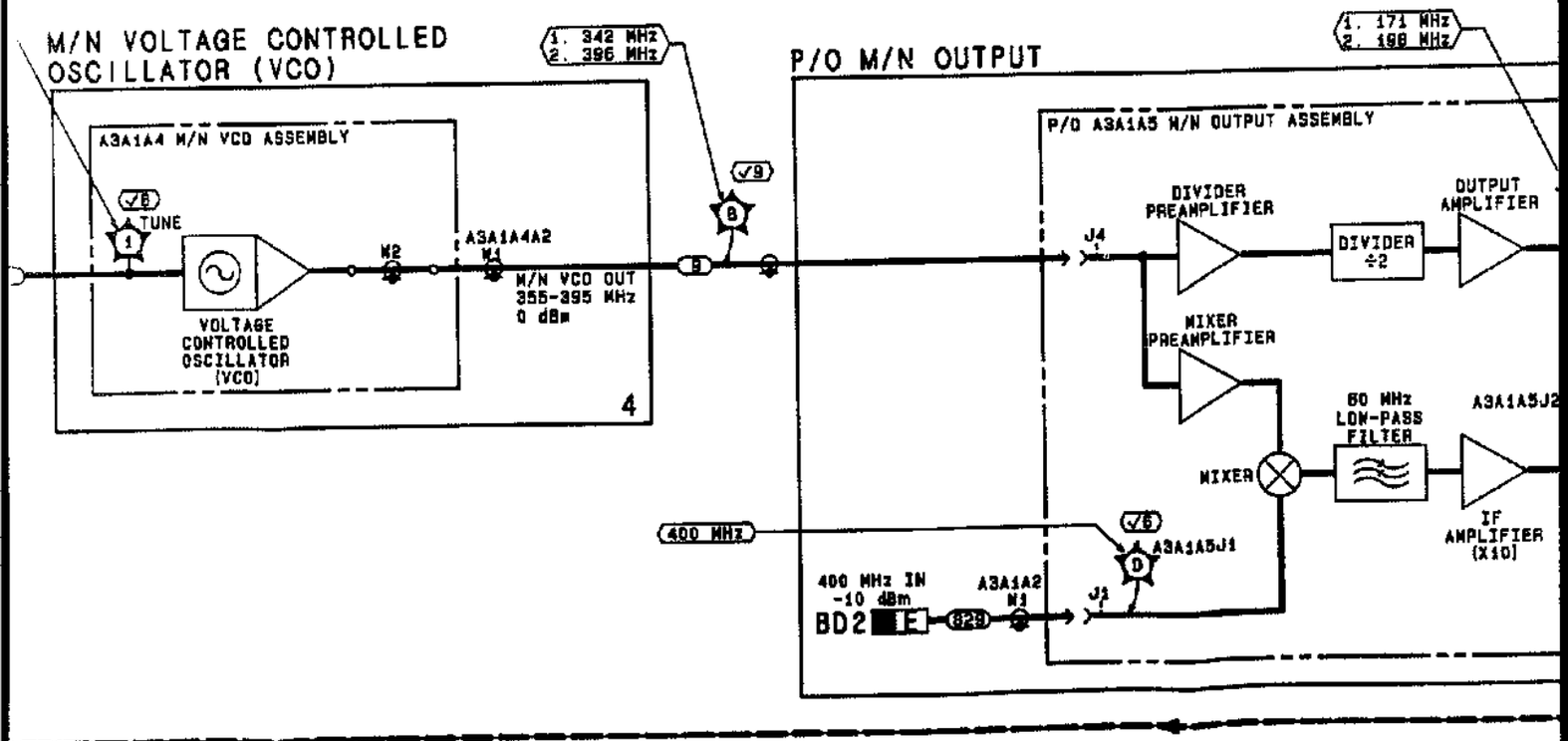


www.valuetronics.com

FIG. 8-30
Sht 4 of 4

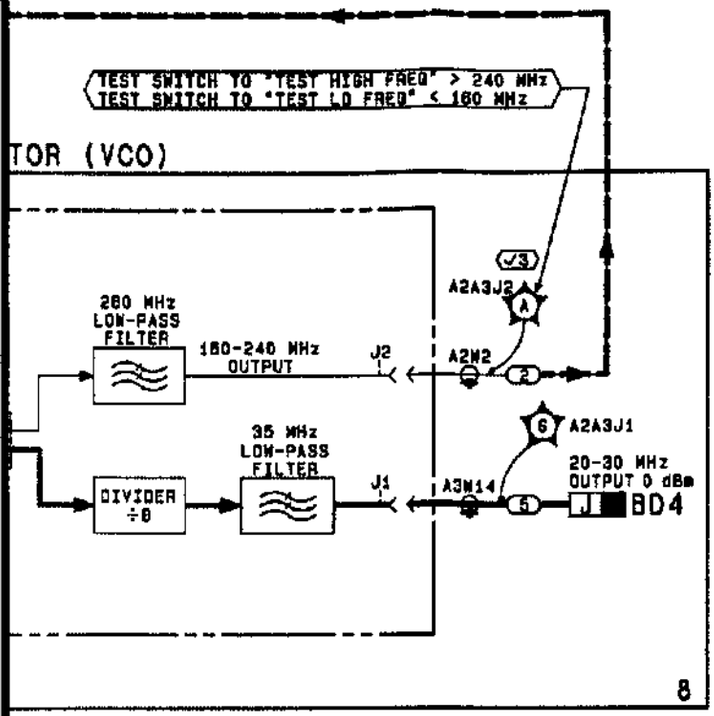


**TROUBLESHOOTING NOTES:**

**LFS LOOP**

FAULT INDICATION - NOT ϕ LOCKED ANNUNCIATOR ON, A2A7 LFS LED OFF (YTO AND REF ON).

1. TO OPEN LOOP, REMOVE A2A3, SET TEST SWITCH TO TEST HIGH AND REPLACE A2A3.
2. CHECK TEST POINTS SHOWN AND ISOLATE ACCORDINGLY.
3. IF TP2 IS BAD, CHECK TP1. THIS COULD BE BAD EVEN THOUGH REF LOOP IS LOCKED.
4. BEWARE FAULTY PHASE LOCK DETECTOR.

**M/N LOOP**

FAULT INDICATION - NOT ϕ LOCKED ANNUNCIATOR ON, A2A7 M/N AND YTO LEDS OFF (REF ON).

1. TO OPEN LOOP, REMOVE WHITE/RED FROM A3A1A5 CONNECTOR. CHECK TP5, 1, B, C, AND E FOR FIRST VALUES GIVEN.
2. CONNECT WHITE/RED CABLE TO 20 MH OUT ON A3A1A1. CHECK TP5, 1, B, C AND E FOR SECOND VALUES GIVEN.
3. CHECK FREQ. AT TPD.

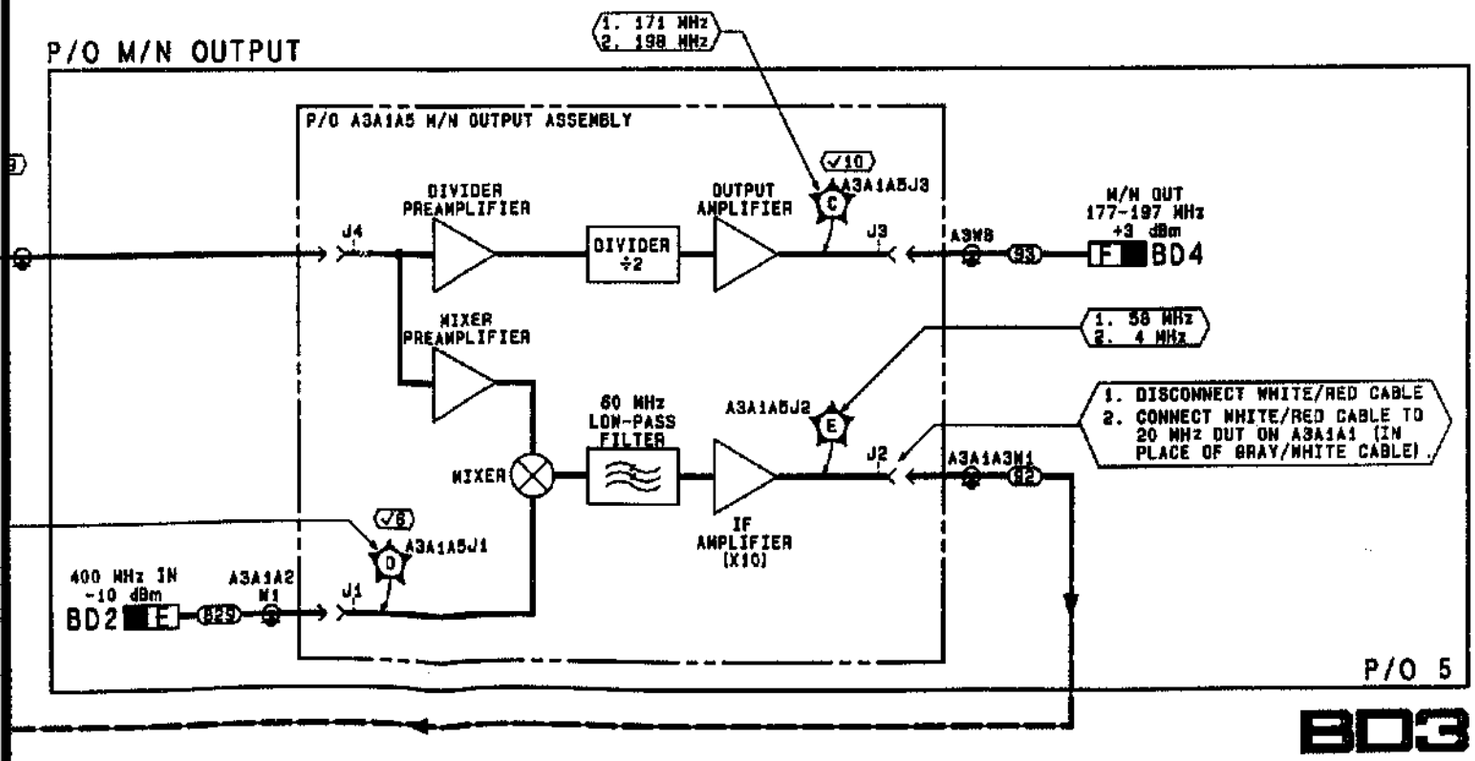


Figure 8-30. HP 8673C/D RF Phase Locked Loops, Block Diagram



www.valuetronics.com

## SERVICE SHEET BD4
## YTO LOOP

### REFERENCES

- Overall Block Diagram and Troubleshooting, BD1 ..... Service Sheet BD1
- Disassembly Procedures ..... Service Sheets A & B
- Interior Views ..... Service Sheets C & D
- Illustrated Parts Breakdown (IPB) ..... Section VI
- Post Repair Adjustments ..... Section V

### PRINCIPLES OF OPERATION

#### General

The YTO Loop generates the Signal Generator's baseband frequencies from 2.0—6.6 GHz. The baseband signal is multiplied or downconverted, as necessary, to produce the other Signal Generator frequencies.

The YTO Loop consists of the following:

- Digital to Analog Converter (DAC), Service Sheet 9
- YIG Tuned Oscillator (YTO) Driver, Service Sheet 10
- YTO Loop
  - Sampler, Service Sheet 11
  - YTO Phase Detector, Service Sheet 12
- YTO/FM Coil Driver, Service Sheet 13
- FM Subsystem
  - Metering Board, P/O Service Sheet 21
  - Logic Latch, P/O Service Sheet 22
  - P/O YTO Phase Detector Assembly, Service Sheet 12
  - P/O YTO/FM Coil Driver, Service Sheet 13

Each is discussed separately below.

#### Digital to Analog Converter

The Digital to Analog Converter (DAC) receives the DAC 1—4800 MHz signal from the DCU to tune the YTO to within 50 MHz of the selected freqeuncy. The DAC output, YTO PRETUNE, is routed to the YIG Tuned Oscillator Driver.

#### Yig Tuned Oscillator (YTO) Driver

This circuit receives the YTO PRETUNE signal from the DAC and the YTO TUNE 2 signal from the YTO/FM Coil Driver, sums the two and routes them to the YTO Assembly. The 100 MHz low pass filter routes only the DC and low frequency (less than 100 Hz.) components of the YTO TUNE 2 signal to the YTO.

#### YTO Loop

**Sampler.** This circuit receives the M/N Loop output and the sampled output of the YTO. The M/N output is applied to a harmonic generator. The output of the hamonic generator is then mixed with the YTO sampled output. Since the YTO has been pretuned to within 50 MHz of the desired frequency, one of the IF frequencies from the mixer will be close to the, 20—30 MHz signal from the LFS Loop. This IF signal is routed to the YTO Phase Detector.

**YTO Phase Detector.** This circuit receives the 20—30 MHz signal from the LFS Loop and the selected IF signal from the Sampler. These two signals are



www.valuetronics.com

compared in a phase/frequency detector. The output of the phase/frequency detector consists of two separate pulse trains. These are compared in a differential amplifier whose output is a single pulse train. The duty cycle of this pulse train is proportional to the difference between the IF signal from the Sampler and the 20—30 MHz signal from the LFS loop. This pulse train is then integrated to generate the YTO TUNE 1 signal. The FM elements of the YTO phase detector are discussed under FM subsystem below.

### YTO/FM Coil Driver

This circuit receives the YTO Tune 1 signal from the YTO Phase Detector, amplifies it and routes it to a crossover network consisting of a 100 Hz high pass filter in the YTO/FM Coil Driver Assembly and a 100 Hz low pass filter in the YTO Driver Assembly. This network sends the FM signal (100 Hz to 3 MHz) to the FM coil of the YTO, and the YTO tuning signal (YTO TUNE 2 plus YTO PRE-TUNE) to the main YTO coil. The FM elements of this circuit are discused under FM Subsystem below.

### FM Subsystem

**Metering Control.** This circuit receives the FM input directly from the front panel, and control signals from the DCU. The FM signal is first applied to the FM Band Select circuit and the FM Metering Circuit. The FM Band select circuit adjusts the FM signal level for the frequency band that has been selected. The FM Metering Circuit converts the FM signal to a dc level that is proportional to the level of the FM input signal. This level is routed to the front panel meter, through the Meter Selection Switch, and to the FM Overmod Circuit that drives the FM OM signal active if the FM level is too high. The FM Overmod circuit also receives an input from the overmodulation detector in the YTO Loop.

The output of the FM Band Select circuit is applied to the FM Amplifier whose gain is controlled by the DCU through the FM Range Select circuit.

**YTO/FM Coil Driver.** In the YTO/FM Coil Driver, the FM Signal from the Metering Control takes two paths: one is through a 0/40 dB attenuator and an FM amplifier and shaping network to the FM Coil Driver. The second path is through an integrator and a 0/40 db attenuator to the Loop Integrator in the YTO Phase Detector. The first path directly modulates the YTO. However, any modulating frequency within the bandwidth of the YTO loop will be canceled out by the loop. The second path provides for modulation within the YTO Loop bandwidth by applying the modulating signal at a point within the loop.

## TROUBLESHOOTING

### General

It is assumed that the troubleshooting information associated with Service Sheet 1 was used to isolate a YTO loop malfunction. The following troubleshooting information can be used to further isolate



www.valuetronics.com

the problem to one of the following YTO assemblies:

- Digital to Analog Converter Assembly
- YTO Driver Assembly
- YTO/FM Coil Driver Assembly
- Sampler Assembler
- YTO Loop Assembly
- Metering & Control Assembly

### Test Equipment Required:

| | |
|---|---|
| Frequency Counter | HP 5343A |
| Signal Generator | HP 8656A |
| Digital Voltmeter | HP 3456A |
| Oscilloscope | HP 1980A/B-811/860 |

### Troubleshooting Procedures

The following procedures are divided into ten checks as follows:

YTO Loop Checks
- YTO Check ✓1
- DAC Check ✓2
- YTO Driver Check (unlocked) ✓3
- Sampler Input Check ✓4
- Sampler Output Check ✓5
- YTO Phase Detector Check ✓6
- Coil Driver Check ✓7
- YTO Driver Check (locked) ✓8

FM Checks
- FM Amplifier Check ✓9
- FM 40 Check ✓10

### YTO Loop Checks.

YTO Check ✓1

1. Press RCL 0 and ground A3A6TP1. This opens the YTO loop to facilitate troubleshooting.

2. Disconnect the cable from J1 of directional coupler A3A9A1 (TPA) and connect the frequency counter in its place.

   The frequency should be 3000.000±20 MHz.

   If the frequency is correct proceed with Step 7.

   If the frequency is not correct, continue with Step 3.



www.valuetronics.com

## SERVICE SHEET BD4 (cont'd)

DAC Check (✓2)

3. Connect the DVM to A3A5TP3 and set the Signal Generator to 2.000 GHz and then to 6.599 GHz and record the DVM indication for each frequency. The voltages should be as follows:

   2.000 GHz −6.00V
   6.599 GHz −19.8V

   If the voltages are correct, proceed with Step 7.

   If the voltages are not correct, A3A5 is either faulty or needs adjustment, or the DAC 1—4800 MHz input from the DCU is faulty. Proceed with Step 4 to check the DAC inputs.

4. Set the Signal Generator to the frequencies shown in Table 8-10 and check the input pins for the indicated logic level.

**Table 8-10. DAC 1—4800 MHz Inputs**

| Freq. GHz | XA3A5- | | | | | | | | | | | | | |
|---|---|---|---|---|---|---|---|---|---|---|---|---|---|---|
| | 7 | 8 | 9 | 10 | 11 | 12 | 13 | 25 | 26 | 27 | 28 | 29 | 30 | 31 |
| 5.698 | 1 | 0 | 1 | 0 | 0 | 0 | 1 | 0 | 0 | 0 | 1 | 0 | 0 | 0 |
| 3.977 | 0 | 1 | 0 | 1 | 1 | 1 | 0 | 1 | 1 | 1 | 0 | 1 | 1 | 1 |

   If all the input levels are as indicated, then DAC A3A5 is defective. Go to Service Sheet 9 to isolate the problem.

   If any of the levels are not as indicated, proceed with Step 5 to check the output pins on Frequency Output-HP-IB A2A9 to insure that the problem is not on the mother board.

5. Remove Frequency Output-HP-IB card A2A9 and replace it on the special extender card (P/N 11726-60002).

6. Set the Signal Generator to the frequencies shown in Table 8-11 and check the output pins for the logic levels given.

**Table 8-11. DAC 1—4800 MHz Outputs**

| Freq. GHz | XA9A- | | | | | | | | | | | | | |
|---|---|---|---|---|---|---|---|---|---|---|---|---|---|---|
| | 23 | 24 | 25 | 26 | 27 | 28 | 29 | 30 | 31 | 32 | 33 | 34 | 35 | 36 |
| 5.688 | 0 | 1 | 0 | 0 | 0 | 1 | 0 | 1 | 0 | 0 | 0 | 1 | 0 | 0 |
| 3.977 | 1 | 0 | 1 | 1 | 1 | 0 | 1 | 0 | 1 | 1 | 1 | 0 | 1 | 1 |

   If all the levels are as indicated, there is a problem on the mother board between A2A9 and A3A5.

   If any of the levels are not as indicated, the problem is in A2A9. Proceed to Service Sheet 29 to isolate the problem.



www.valuetronics.com

## SERVICE SHEET BD4 (cont'd)

YTO Driver Check (unlocked) ✓3

7. Connect the DVM to A3A6TP2 and set the Signal Generator to 2.000 GHz and then to 6.599 GHz and record the DVM indication for each frequency.

   The voltages should be as follows:

   | | |
   |---|---|
   | 2.0 GHz | −37.5 Vdc±10% |
   | 6.599 GHz | −32.0Vdc±10% |

   If the voltages are correct, the YTO Assembly or the directional coupler is defective. Proceed to Service Sheet 13 for troubleshooting.

   If the voltages are not correct, the YTO Driver Assembly is defective or requires adjustment. Perform the YTO Driver Adjustments in Section V. If A3A6 cannot be properly adjusted, proceed to Service Sheet 10 for troubleshooting.

Sampler Input Check ✓4

8. Disconnect semirigid coaxial cable A3A9W2 from attenuator A3A9A6 (TPB) and connect the frequency counter in its place.

   The frequency should be within ±20 MHz of the frequency displayed on the front panel.

   If the frequency is correct, proceed with Step 9.

   If frequency is not correct, either coupler A3A9A1, low pass filter A3A9A7 or attenuator A3A9A6 is defective. Proceed to Service Sheet 13 to troubleshoot.

Sampler Output Check ✓5

9. Reconnect A3A9W2, then disconnect the black cable (A3A9W4) from A3A9J2 (TPE) and connect the counter in its place. Press RCL 0.

   The frequency should be greater than 30 MHz.

   If the frequency is correct, replace the black cable and proceed with Step 11.

   If the frequency is not correct, proceed with Step 10.

10. Disconnect the white/orange cable from M/N IN connector A3A9J5 (TPC) and connect the cable to the counter.

    The frequency should be 189.375 MHz±1 count. If the frequency is correct, the Sampler Assembly is faulty. Go to Service Sheet 11 for troubleshooting.

    If the frequency is not correct, the M/N Loop is defective. Go to BD3 for troubleshooting.

11. Disconnect the green cable from 20—30 MHz connector A3A9J3 (TPD), and connect the cable to the counter.

    The frequency should be 30.000 MHz±1 count.

8-56e

www.valuetronics.com

**SERVICE SHEET BD4 (cont'd)**

If the frequency is correct, leave the green cable disconnected and continue with Step 12.

If the frequency is not correct, the LFS Loop is defective. Proceed to BD3 for troubleshooting.

YTO Phase Detector Check (6)

12. Remove ground from A3A6TP1 and connect DVM to A3A7TP2.

    The voltage should be greater than +5V.

    If the voltage is correct, continue with Step 13.

    If the voltage is not correct, A3A9A4 is defective, proceed to Service Sheet 12 for troubleshooting.

13. Disconnect the black cable from A3A9J1 and recheck the DVM indication.

    The voltage should be less than −5V.

    If the voltage is correct, proceed with Step 14.

    If the voltage is not correct, A3A9A4 is defective, proceed to Service Sheet 12 for troubleshooting.

Coil Driver Check (7)

Initial Conditions: Green cable disconnected from A3A9J3 (TPD); black cable disconnected from A3A9J1 (TPE)

14. Connect DVM to A3A6TP1.

    The voltage should be less than −5.3V. If the voltage is correct, proceed with Step 15.

    If the voltage is not correct, the phase lock amplifier of A3A7 is defective. Proceed to Service Sheet 13 for troubleshooting.

15. Reconnect the black cable to A3A9J1 (TPE) and recheck the DVM indication.

    The voltage should be greater than 6.7V.

    If the voltage is correct, proceed with Step 16.

    If the voltage is not correct, phase lock amplifier of A3A7 is defective. Proceed to Service Sheet 13 for troubleshooting.

YTO Driver Check (locked) (8)

Initial Conditions: Green cable disconnected from A3A9J3 (TPD); black cable connected to A3A9J1 (TPE).

15. Connect DVM to A3A6 TP2. Reconnect the green cable to A3A9J3 and record the DVM indication. Disconnect the green cable from A3A9J3 and record the new DVM indication.

    The DVM indication should increase by about 0.02 volts when the cable is removed.

    If the voltage change is correct, reconnect the green cable to A3A9J3 (TPD), disconnect the black cable from A3A9J3 (TPE) and proceed with Step 16.

    If the voltage change is not correct, A3A6 is defective or requires readjustment. Perform the YTO Driver Adjustment procedure in Section V. If A3A6 cannot be adjusted, proceed to Service Sheet 10 for troubleshooting.

16. Connect the DVM to A3A6TP2. Reconnect the black cable to A3A9J3 (TPE) and record the DVM indication. Disconnect the black cable from A3A9J3 (TPE) and record the new DVM indication.

    The DVM indication should decrease by about 0.02 volts when the cable is removed.

    If the voltage change is as indicated, replace the black cable and proceed with FM Checks beginning with Step 17.

    If the voltage change is not as indicated, A3A6 is defective or requires readjustment. Perform the YTO Driver Adjustment procedure in Section V. If A3A6 cannot be adjusted, proceed to Service Sheet 10 for troubleshooting.

**FM Checks.**

FM Amplifier Check (9)

17. On front panel press RCL 0 and set for FM deviation of 10 MHz.

18. Connect the test equipment as shown in Figure 8-31.

19. Set the test oscillator for 10 MHz at an output level of 0V.

20. Connect oscilloscope to A3A7TP5.

21. Adjust the Test Oscillator output level for 1V peak display on the oscilloscope.

    If the Test Oscillator output level cannot be adjusted to produce the indicated oscilloscope display, the FM amplifier in A1A6 is defective. Proceed to Service Sheet 21 for troubleshooting.

    Otherwise, continue with Step 22.



www.valuetronics.com

**SERVICE SHEET BD4 (cont'd)**

22. Press the following keys in sequence and check for the corresponding signal level on the oscilloscope:

| KEYS | SIGNAL LEVEL |
|---|---|
| 3 | 0.3 V peak |
| 1 | 0.1 V peak |
| .3 | 0.03 V peak |

If any or all of the above indications are incorrect, the gain control of the FM amplifier is defective. Proceed to Service Sheet 21 for troubleshooting.

Otherwise, continue with Step 23.

FM 40 Check (✓10)

23. Remove A1A5 and install it on an extender board. Connect the DVM to XA5-7 (TPF) and observe the voltage, then press the FM DEVIATION MHz .1 key.

The voltage should jump from zero volts to +4.5 volts.

If the voltage does not change as indicated, the logic latch or associated circuitry on A1A5 is defective. Go to Service Sheet 22.

If the voltage does change as indicated, and if the indications in steps 21 and 22 are correct, the FM circuitry of A3A7 is at fault. Go to Service Sheet 13.

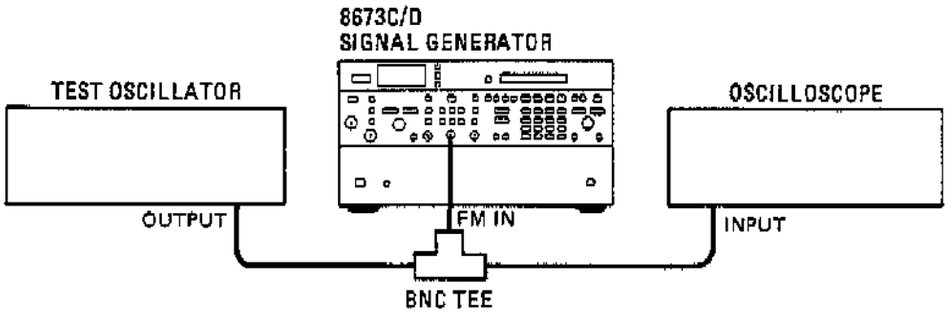


**Figure 8-31. FM Amplifier Check Initial Test Setup**



www.valuetronics.com

FIG. 8-32
Sht 1 of 4

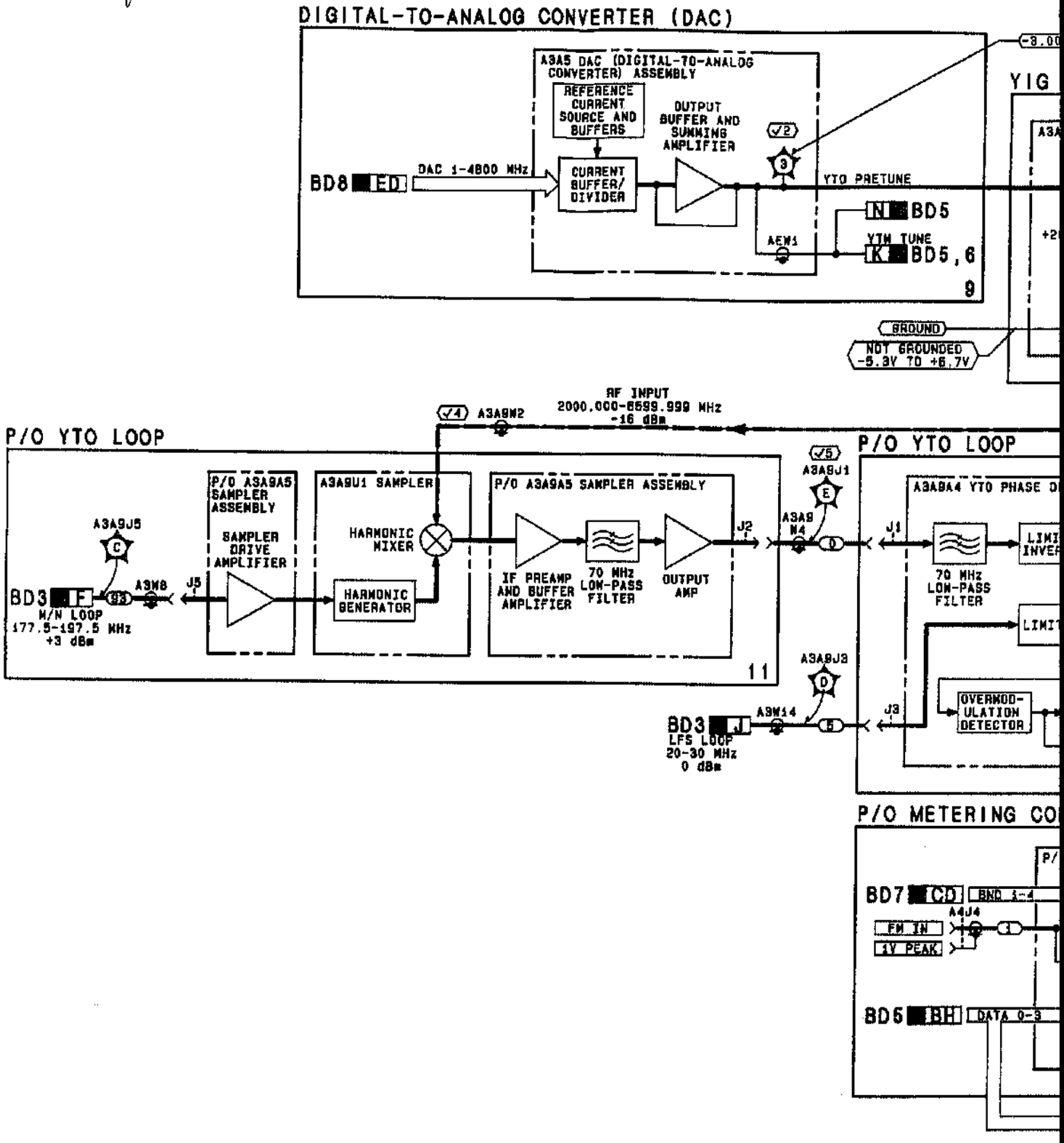


www.valuetronics.com

Fig. 8-32
Sht 2 of 4

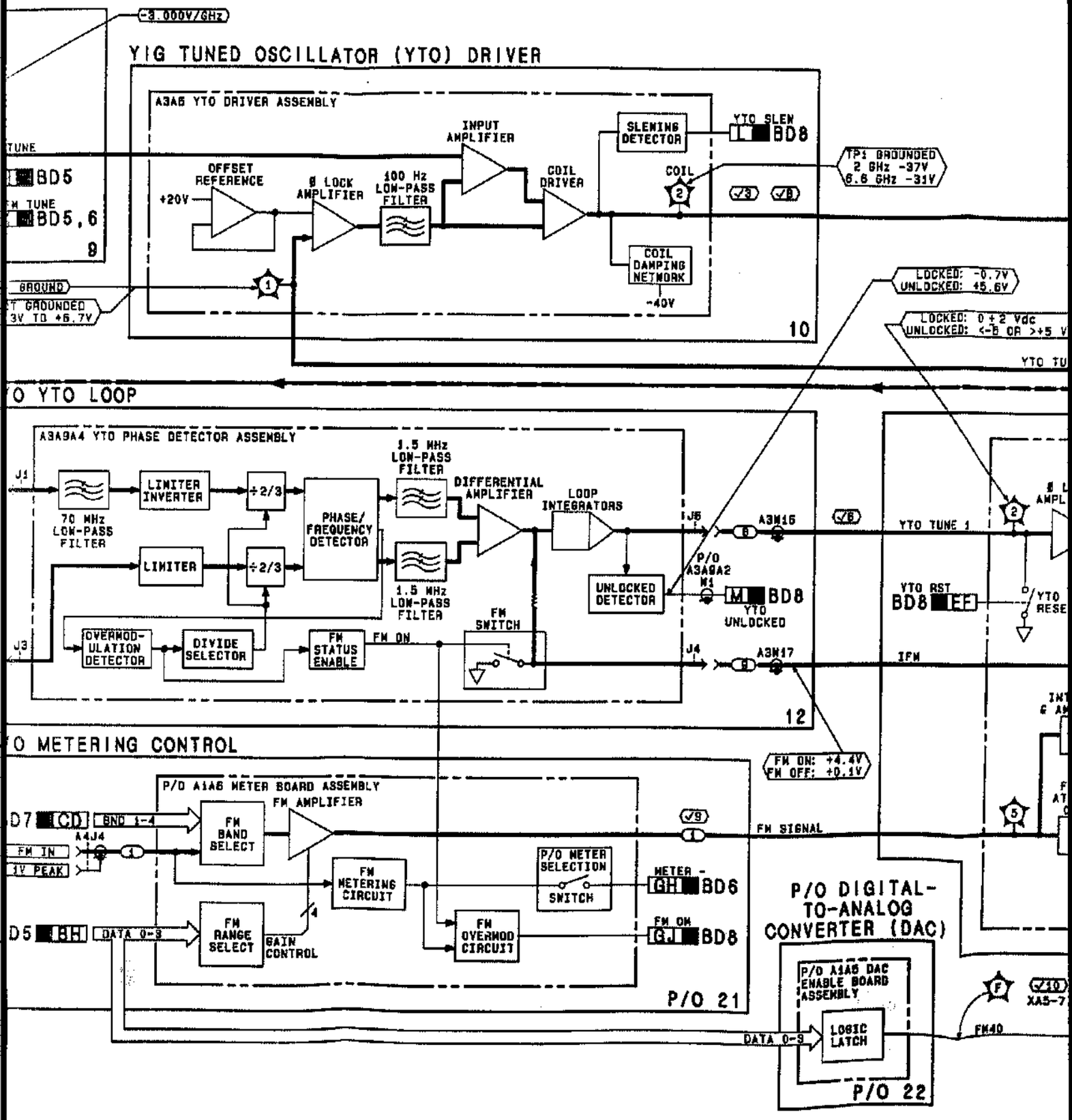


www.valuetronics.com

FIG. 8-32
SHT 3 of 4

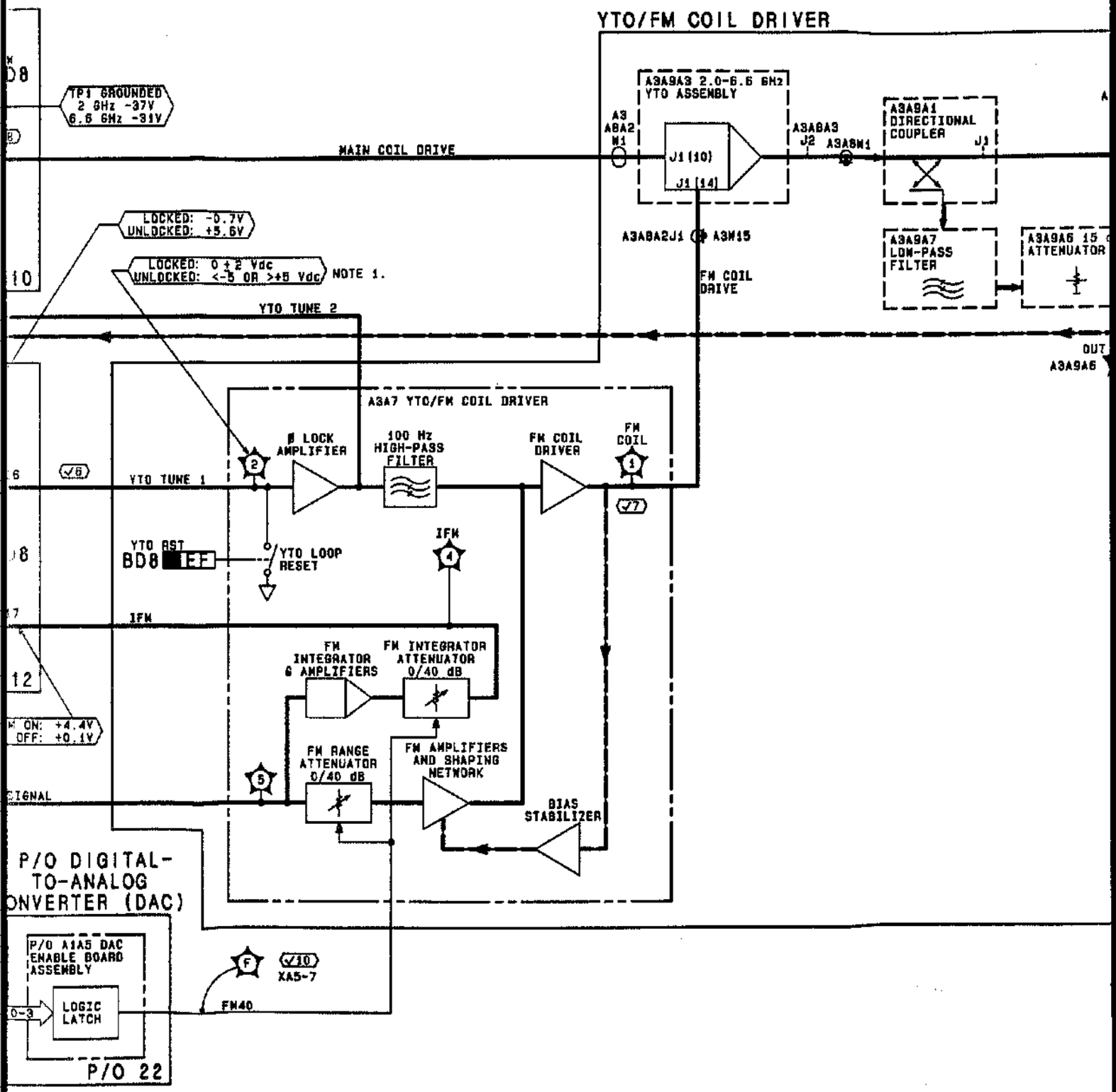


www.valuetronics.com

FIG. 8-32
Sht 4 of 4

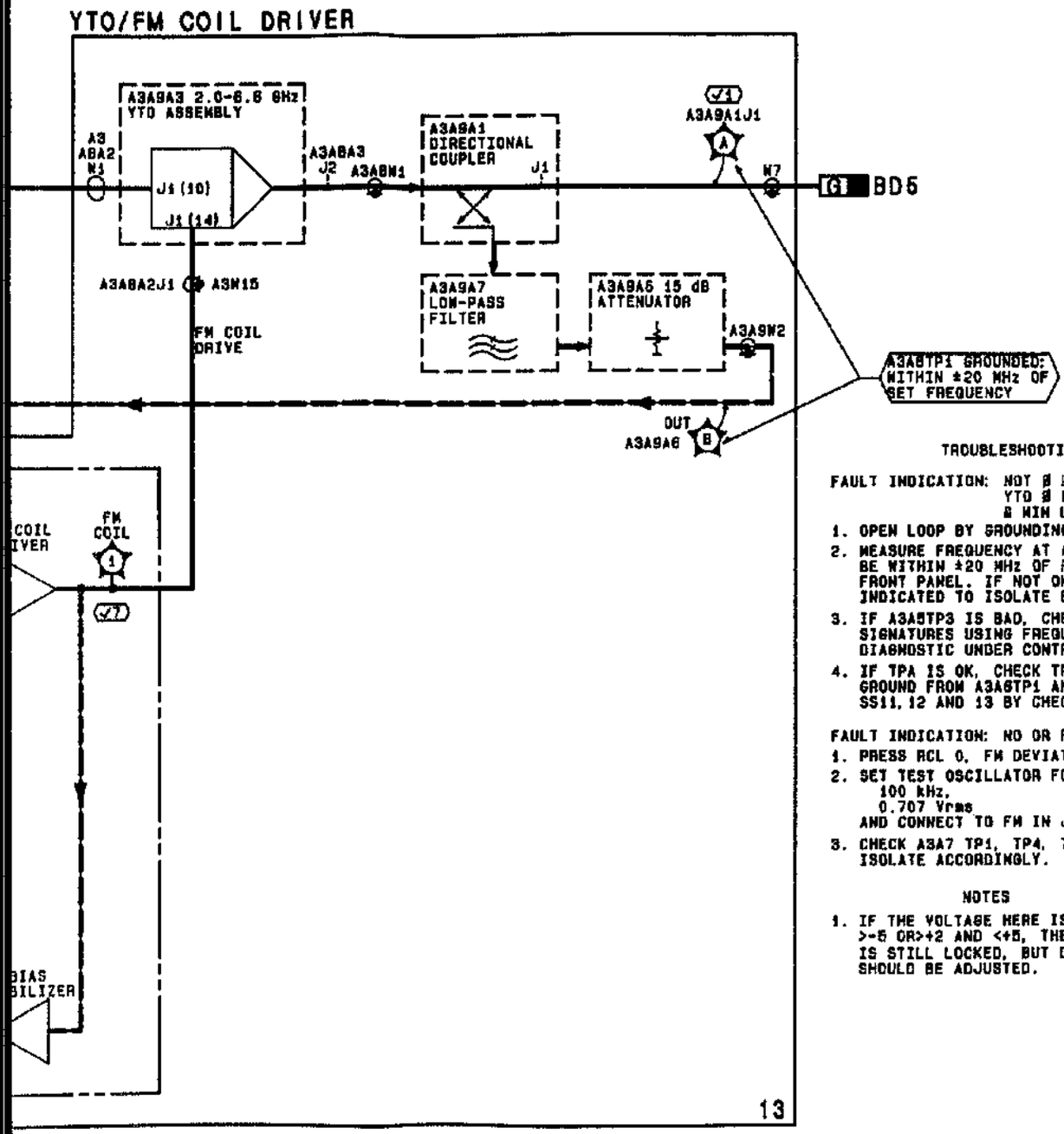


TROUBLESHOOTING NOTES:

FAULT INDICATION: NOT @ LOCKED ANNUNCIATOR ON
YTO @ LOCK LED OFF (REF. LFS @ MIN LEDS ON).

1. OPEN LOOP BY GROUNDING A3A8 TP1.
2. MEASURE FREQUENCY AT A3A9A1J1. SHOULD BE WITHIN ±20 MHz OF FREQUENCY SET ON FRONT PANEL. IF NOT OK, USE TEST POINTS INDICATED TO ISOLATE BETWEEN SS9, 10 AND 13.
3. IF A3A8TP3 IS BAD, CHECK DAC 1-4800 SIGNATURES USING FREQUENCY OUTPUT DIAGNOSTIC UNDER CONTROLLER TROUBLESHOOTING.
4. IF TPA IS OK, CHECK TPB. IF OK, REMOVE GROUND FROM A3A8TP1 AND ISOLATE BETWEEN SS11, 12 AND 13 BY CHECKING TEST POINTS.

FAULT INDICATION: NO OR FAULTY FM.

1. PRESS RCL 0, FM DEVIATION MHz .1
2. SET TEST OSCILLATOR FOR:
   100 kHz,
   0.707 Vrms
   AND CONNECT TO FM IN JACK.
3. CHECK A3A7 TP1, TP4, TP5 AND FAULT ISOLATE ACCORDINGLY.

NOTES

1. IF THE VOLTAGE HERE IS <-2 AND >-5 OR>+2 AND <+5, THE YTO IS STILL LOCKED, BUT DAC A3A5 SHOULD BE ADJUSTED.

BD4

Figure 8-32. HP 8673C/D YTO Loop, Block Diagram



www.valuetronics.com

## SERVICE SHEET BD5
## MICROWAVE SIGNAL PATH

### REFERENCES

- Overall Block Diagram and Troubleshooting, BD1 ..... Service Sheet BD1
- Disassembly Procedures ..... Service Sheets A & B
- Interior Views ..... Service Sheets C & D
- Illustrated Parts Breakdown (IPB) ..... Section VI
- Post Repair Adjustments ..... Section V

### PRINCIPLES OF OPERATION

#### General

The Microwave Signal Path performs two basic functions:

- Multiplies the 2—6 GHz YTO output to 2—18 GHz (26 GHz for the HP 8673D)
- Downconverts the 2—6 GHz YTO output to the 0.05 to 2 GHz Low Band

In addition, a K band (11—33 GHz) amplifier is included in the HP 8673D to amplify frequencies above 16 GHz.

The Microwave Signal Path is functionally divided into the following assemblies

- ALC Modulator, part of the detector/ALC assembly, Service Sheet 14
- Pulse Modulator, part of the Pulse Driver Processing Assembly, Service Sheet 15
- Peaker Digital to Analog Converter (DAC), part of the DAC and enable assembly, Service Sheet 22
- Step Recovery Diode (SRD) Assembly, Service Sheet 19
- YIG Tuned Multiplier (YTM) driver assembly, Service Sheet 16
- RF Filter, RF Amplifier, and Detector Amplifier Circuits Assembly, Service Sheet 17
- A5 Peaker Digital to Analog Converter (DAC), part of the A5 DAC and Enable Assembly, Service Sheet 44
- YIG Tuned Filter (YTF) Slope and RF Relay Switch Drivers, part of Switch Driver Board Assembly, Service Sheet 41
- A5 YIG Driver Assembly, Service Sheet 38
- Low Band (0.05—2.00 GHz) RF Signal Chain, Service Sheet 45
- Attenuator Driver assembly, Service Sheet 18

The ALC modulator is driven by the ALC circuits to maintain a constant level for the RF output signal. This is discussed more fully under ALC operation, Service Sheet BD6.

The Pulse Modulator is driven by the pulse modulation circuits to pulse modulate the RF signal. This is discussed more fully under pulse modulation operations, Service Sheet BD7.

The Peaker DAC is used by the DCU to peak the output signal during pulse modulation. The YIG filter is adjusted so that the RF signal is set to the center of the YIG filter band to insure that harmonics of the input pulse are not attenuated by the YIG filter.



www.valuetronics.com

Step Recovery Diode Control changes the SRD bias of the YTM Assembly, under DCU control, to adjust for different bias requirements at different frequencies.

In band 1, the step recovery diode (SRD) is forward biased to a low impedance to allow the input signal to pass through the filter. No significant harmonic generation occurs. In the multiplying bands (2—4) the SRD is biased to act as a charge controlled switch. This biasing produces a very narrow, harmonically rich pulse when the diode switches from forward to reverse bias. The pulse width is determined by the circuit inductance and the diode capacitance. Narrow pulsewidths of 40 ps are required to obtain high conversion efficiency to 26.5 GHz. The proper timing of the switching action is controlled by the dc voltage bias level. The YIG tuned filter in the YTM selects the desired harmonic from the harmonically rich pulse to multiply the signal.

Optimum RF conversion efficiency requires that the appropriate dc bias levels be established for the SRD. These bias levels are achieved using a variable resistance FET to control the self bias conditions across the SRD. A blocking capacitor prevents the dc current from flowing through the driving source. The resistance of the FET is controlled by varying the gate voltage.

The Step Recovery Diode Control board also provides, under DCU control, band adjust signals to the YIG Driver Board.

### YIG Tuned Multiplier

The YIG Tuned Multiplier (YTM) is a broadband multiplier with an input frequency range of 2.0 to 6.625 GHz and an output frequency range of 2.0 to 26.5 GHz. This range is divided into four bands which correspond to the frequency multiplication factors of 1 through 4. The four bands and their input and output frequency ranges are listed in Table 8-12.

Table 8-12. Band Numbers and Frequencies

| Band | Input Frequency Range (GHz) | Output Frequency Range (GHz) |
|---|---|---|
| 1 | 2.0 to 6.6 | 2.0 to 6.6 |
| 2 | >3.3 to 6.15 | >6.6 to 12.3 |
| 3 | >4.1 to 6.2 | >12.3 to 18.6 |
| 4 | >4.65 to 6.625 | >18.6 to 26.5 |

The YTM is a standard step recovery diode (SRD) multiplier that produces a harmonic rich comb spectrum (see Figure 8-33). The input frequency from the YIG tuned oscillator (YTO) is tunable. The output frequency is chosen by selecting a single harmonic component through the YIG filter. The multiplier is inherently broadband in that the comb spectrum, generated by the SRD, extends from the input frequency to an upper limit above 30 GHz. The required output frequency is obtained by tuning the YIG filter to a specific harmonic. The YIG filter suppresses all other frequencies. An input low



www.valuetronics.com

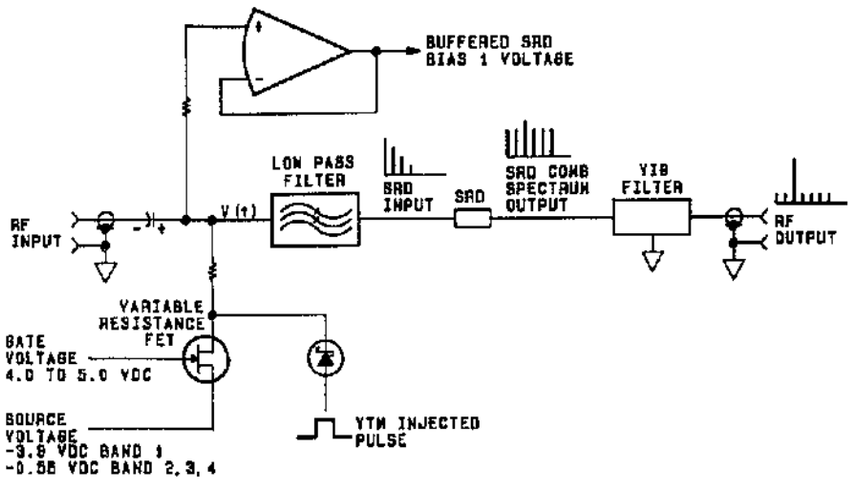


**Figure 8-33. YTM Simplified Block Diagram**

pass filter prevents the output signal from being absorbed by the driving source.

The RF Filter, RF Amplifier, and Detector Amplifier Circuits Assembly contains filters and associated relays, a directional coupler and detector (the detector amplifier is shown on Service Sheet BD6) and, for the HP 8673D only, a K band amplifier and associated relays.

The filter relays are controlled by the DCU (through the Switch Driver Board) to switch in different filters as the Signal Generator frequency is changed. For low band frequencies, the relays send the RF to the Low Band RF Signal Chain. A BYPASS/NORMAL relay is provided so that the unit can be operated (in bands 1—4 only) without the filters. This gives more output power but with degarded signal purity. A relay is also provided on the HP 8673D to allow the DCU to switch the K Band amplifier in for frequencies above 16.6 GHz.

The A5 Peaker DAC does the same thing as the Peaker DAC described above except that it controls YIG filter A5FL2 in the RF Filter, RF Amplifier, and Detector Amplifier Circuits Assembly.

The YTF Slope and RF Relay Driver circuits are on the switch driver board. The first of the two (XTF slope) is controlled by the DCU to adjust the A5 YIG Driver Board for band changes just as the Step Recovery Diode Board adjusts the YIG Driver Board in the YTM Driver Assembly. The RF Relay drivers are used by the DCU to turn on the appropriate relays based on the selected frequency.

The A5 YIG driver assembly circuit receives YTO PRETUNE from the DAC on BD4 and control signals from the Switch Driver Board to control YIG Tuned filter A5FL2.

The Low Band RF Signal Chain downconverts the 2.0—6.5 GHz YTO output to the 0.05—2 GHz low band signal. This is done by



www.valuetronics.com

mixing the output of a 4.2 GHz local oscillator with the YTO output. This assembly also includes an ALC modulator and a pulse modulator for the low band RF, and a directional coupler and detector used by the low band ALC.

The Attenuator Driver Assembly decodes inputs from the DCU to control the output attenuator. The signals from the DCU are based on the front panel RANGE settings. This assembly also decodes the DCU signals that control the BYPASS/NORMAL and K band amplifier relays.

## TROUBLESHOOTING

### General

It is assumed that the troubleshooting procedures associated with BD1 have been used to isolate a problem to the Microwave Signal Path, illustrated on BD5.

The following procedure is designed to:

1. Check out the microwave signal path of the Signal Generator, and
2. Isolate any problems encountered.

Some of the following steps may be skipped, but only if you have a lot of experience with the HP 8673C/D, and with these procedures. For anyone lacking this experience, all steps should be performed.

### Troubleshooting Hints

**Squegging.** Squegging is an unstable YTM output caused by too much power being applied to the YTM input. See Figure 8-34 for an example of squegging. This condition can occur in Band 1 because the RF signal itself (rather than some harmonic of the RF signal) is applied to the YTM. To prevent squegging in Band 1, the RF signal is clamped to a safe power level before it is applied to the YTM. Thererefore, if squegging occurs, first try to readjust the clamp circuit.

**Programmable Attenuator.** When the power plots are run using the HP 8673C/D adjustment cassette, the programmable attenuator is set for zero attenuation. Therefore, if you seem to be having power problems but the plots are normal, suspect the programmable attenuator. (Not applicable to options 001 and 005 which have no programmable attenuator.)

### Troubleshooting Procedure

The troubleshooting procedure is divided into the following checks:

Baseband Power Check ✓1

YTM Output Power Check ✓2

Final Output Power Check ✓3

Downconverter Check ✓4

Programmable Attenuator Check ✓5



www.valuetronics.com

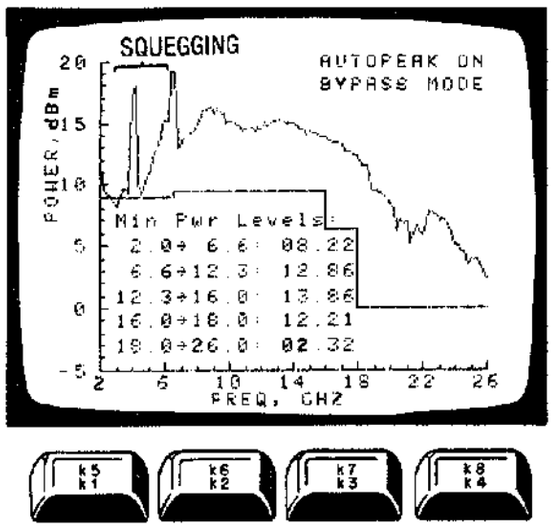


**Figure 8-34. Squegging**

If a check is faulty, procedures are provided to isolate the problem to a service sheet.

**Baseband Power Check.** (✓1)

1. Remove cable A1W4 from A1FL1 (See Figure 8-35).
2. Connect power meter to the output of A1FL1.
3. Set the Signal Generator frequency to 2.000000 GHz and the frequency increment to 100 MHz.
4. Tune from 2.0 to 6.59999 GHz while observing the power meter.

   Power should not drop below +11.5 dBm at any frequency.

   If the power is good proceed with Step 10, YTM Output Power Check.

   If the power is not good proceed with Step 5.
5. To measure power at TPB, remove cable A1W11 from Bias Tee A1CP1, See Figure 8-35, (removal of the cable can be faciliated by first removing circuit boards A1A7 and A1A8).
6. Connect cable to power meter.
7. Tune from 2.0 to 6.59999 GHz while observing power meter.

   The power should not drop below +12 dBm for any frequency.

   If the power is as indicated, the problem is in the Bias Tee, Pulse Modulator or Filter; go to Service Sheet 15.

   If the power is not as indicated, proceed with Step 8.



www.valuetronics.com

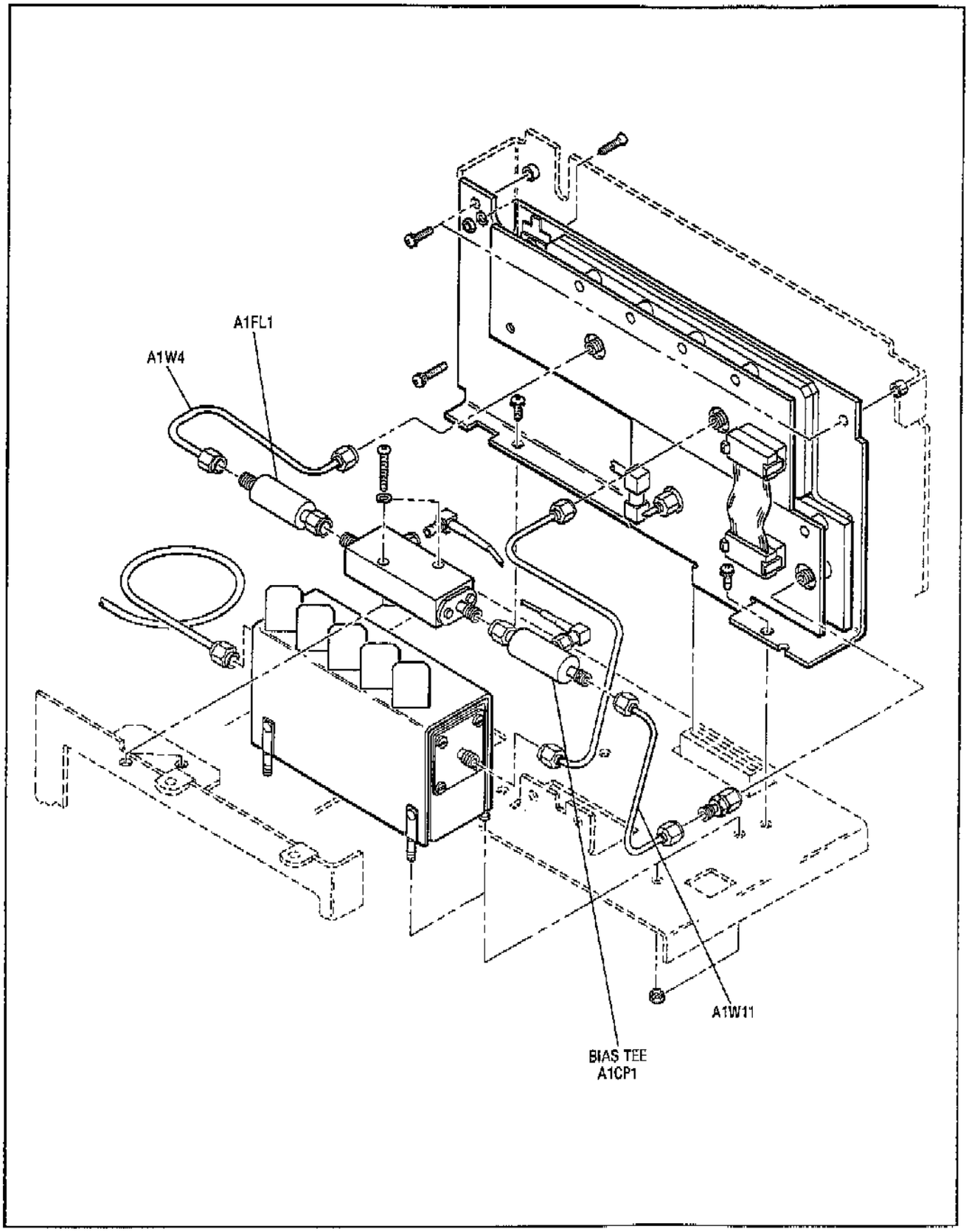


**Figure 8-35. Pulse/YTM Driver Assembly Parts Location**



www.valuetronics.com

## SERVICE SHEET BD5 (cont'd)

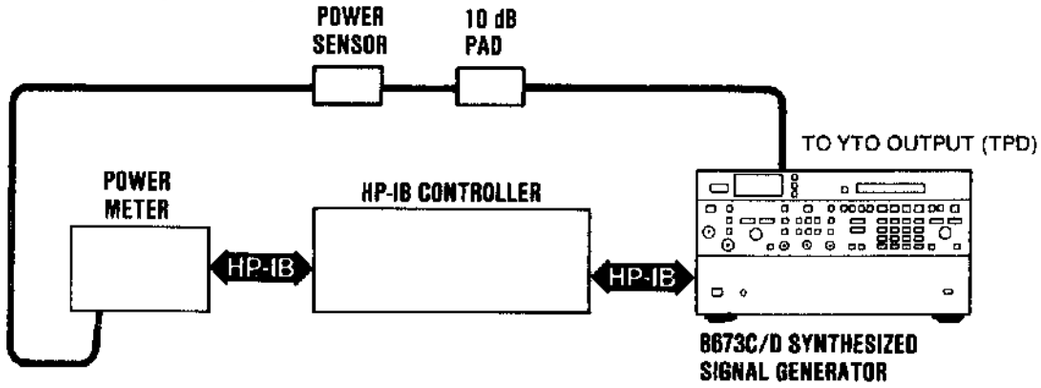


**Figure 8-36. YTM Power Output Power Check Test Setup**

8. To check power at TPA, remove cable W7 from the OUTPUT connector of directional coupler A3A9A1 and connect the power meter in its place.
9. Tune from 2.0 to 6.5999 GHz while observing the power meter.

   The power should not drop below +10 dBm for any frequency.

   If the power is OK, Detector/ALC Assembly A1A2 is defective go to Service Sheet 14.

   If the power is low at any frquency, the YTO is defective, go to Service Sheet 13.

### YTM Output Power Check (Z2)

10. To measure power at TPD, connect the equipment as shown in Figure 8-36.
11. To connect the power sensor to the YTM Output, remove the cable from the YTM Output and connect the 10 dB pad to the YTM output. Then connect the cable from the power sensor to the 10 dB pad.
12. Place the HP 8673C/D Adjustment cassette into the HP-IB controller then load and run "EXEC"
13. Select MAX POWER & OTHER UTILITIES then MAX POWER TEST.
14. Run a 2 to 18.6 GHz (26 GHz for HP 8673D) plot.

    Compare the plot against the plot shown in Figure 8-37. For frequencies above 6.6 GHz the power should match the plot in the figure.

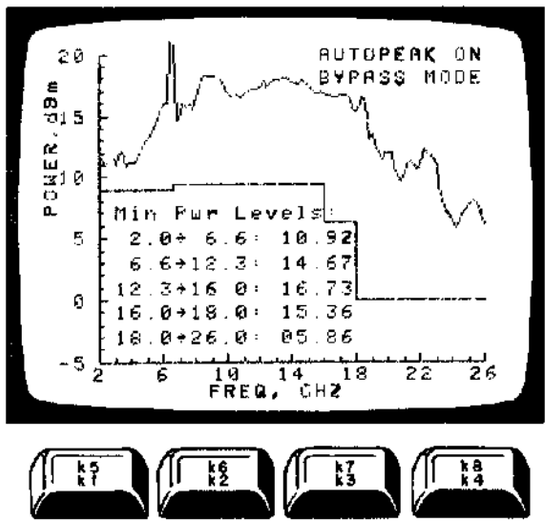


**Figure 8-37. YTM Power Output Plot**



www.valuetronics.com

## SERVICE SHEET BD5 (cont'd)

**NOTE**

*Ignore the unstable output (squegging) in band 1 of the power plot taken in Step 14. This happens because the plot is run with the ALC Loop open. This deactivates the band 1 clamp and causes the squegging.*

If the power is good, proceed with Final Output Power check beginning with Step 21.

If the power is not good, proceed with SRD Bias Board checks beginning with Step 15.

### SRD Bias Board Checks (2a) (2b)

In the following steps the inputs and outputs of SRD Bias Board A1A8 are checked.

15. Refer to the SRD BIAS label on the back of the A2 section (See Figure 8-38). Using a DVM, check the voltages at test points 1 and 2 of A1A8 against this label. On the label, the voltage listed to the right of the band number is the source bias voltage (TP1) which does not vary across the band. The voltage below the band number is the Gate Bias voltage at the low end of the band, and the remaining voltage is the Gate Bias voltage at the high end of the band.

    If the voltages are not as shown on the label, ±1mV, proceed to Section V and attempt to adjust them.

    If they cannot be adjusted, proceed to Service Sheet 19 to isolate the problem on the SRD Bias Board. Otherwise, proceed with Step 16.

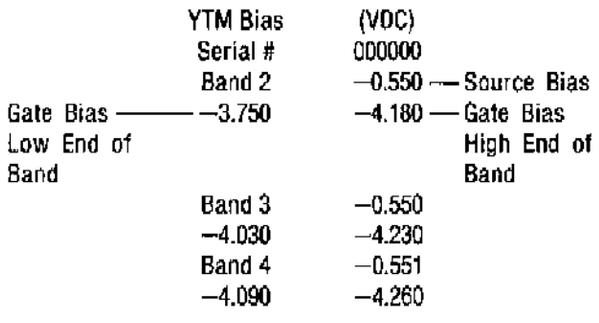


**Figure 8-38. YTM Bias Label**

16. Remove SRD Bias Board A1A8 and replace it on a 36 pin extender card. Using a DVM, measure the voltages at TPF (XA8 pins 17, 18, and 35) for bands 2, 3, and 4 (HP 8673D only).

    The indication should be as shown in Table 8-13.

**Table 8-13. SRD Bias Voltages**

| Signal | XA8- | Band | | | |
|---|---|---|---|---|---|
| | | 1 | 2 | 3 | 4 |
| G2 | 17 | L | H | L | L |
| G3 | 18 | L | L | H | L |
| G4* | 35 | L | L | L | H |

L≈−29V
H≈−1V
*HP 8673D only

    If any indication is abnormal, proceed to Service Sheet 19 to isolate the problem.

    Otherwise, proceed with Step 17.

17. Connect DVM to TPK (XA8-10).

18. Set the Signal Generator to the following frequencies and check for the corresponding voltage.

| Frequency (GHZ) | Voltage |
|---|---|
| 2.0 | −6 ±0.1V |
| 4.0 | −12 ±0.1V |
| 6.0 | −18 ±0.1V |

    If the voltages are incorrect there is a problem with the digital to analog converter. Go to Service Sheet 9.

    If this and all previous measurements on A1A8 are correct, A1A8 is functioning normally. Proceed with Peaker DAC check beginning with step 19.

### Peaker DAC Check.

19. On Microprocessor Board A2A8 set diagnostic switch to position 5, and install the MPU Test Board (P/N 11726-60001) on the top of Microprocessor Board A2A8.

20. Install a shorting clip between A2A8TP5 and A2A8TPGND.



www.valuetronics.com

## SERVICE SHEET BD5 (cont'd)

**CAUTION**

*Do not leave the Signal Gererator in this mode for more than a few minutes at a time. To do so would cause excessive wear to several relays that are heavily exercised in this mode.*

21. Connect oscilloscope to TP4 on A1A5.

    The oscilloscope display should show a waveform similar to the one in Figure 8-39.

    If the waveform is incorrect, there is a problem with the DAC & Enable board. Go to Service Sheet 22.

    If the waveform is correct and if all of SRD Bias Board A1A8 checks where correct, the problem is with power amplifier A1A11, Isolator A1A12, YTM assembly A1A10 or YIG Driver Board A1A7. Proceed to Service Sheet 16 to isolate the problem.

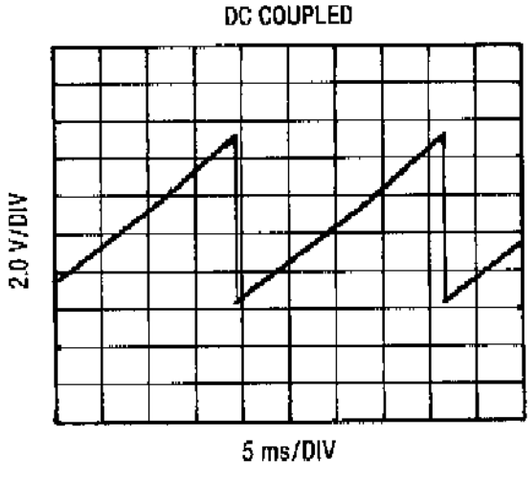


**Figure 8-39. Peaker DAC Ramp Output**

### Final Output Power Check

This procedure checks the filters, relays, downconverter, K band amplifier (HP 8673D only) and directional coupler of the HP 8673C/D. The output power is checked from 0.05 to 18 GHz (26.6 GHz HP 8673D) in various configurations (e.g. normal, bypass, K band amp in, K band amp out). If a power problem is found at any frequency, first perform the Switch Driver Board checks for the frequency band(s) affected. If this checks out, other procedures are used, based on the failed frequency(s), to isolate the problem.

22. Connect equipment as shown in Figure 8-40. With the HP HP 8673C/D Adjustment Cassette still installed (See Step 12) run the following power plots, as appropriate:

    HP 8673C

    1. Bypass
    2. Normal

    HP 8673D

    1. K Band Out, Bypass
    2. K Band Out, Normal
    3. K Band In, Bypass
    4. K Band In, Normal

    HP 8673C/D

    1. Low Band Power

23. Compare the plots just taken to those in Figures 8-41 through 8-45. Refer to Table 8-14 for the HP 8673C or Table 8-15 for the HP 8673D, for possible failure modes, and take the indicated action.

    If there are no failures, proceed with ☑ Programmable Output Attenuator check, beginning with Step 36.

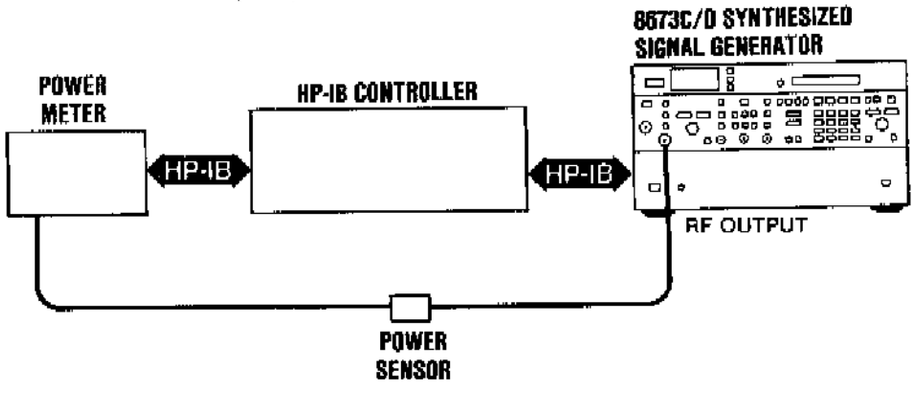


**Figure 8-40. Final Output Power Check Test Setup**



www.valuetronics.com

**SERVICE SHEET BD5 (cont'd)**

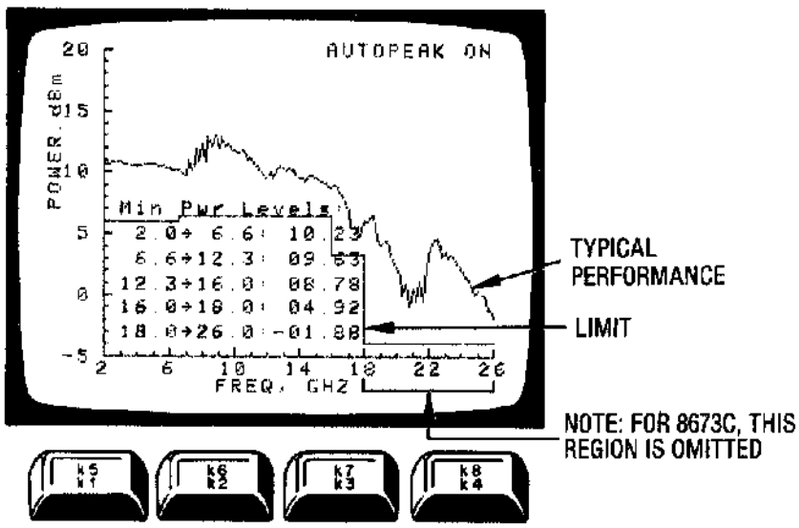


**Figure 8-41. HP 8673C/D Power Output Plot, K Band Amplifier Out, Normal Mode**

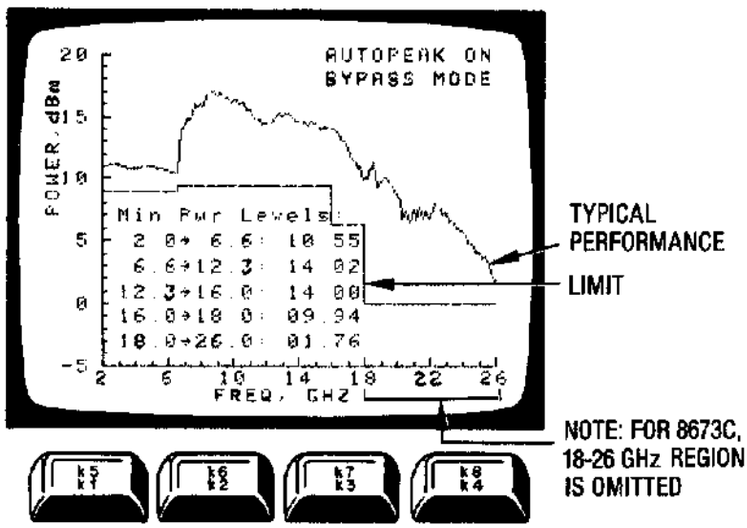


**Figure 8-42. HP 8673C/D Power Output Plot, K Band Amplifier Out, Bypass Mode**



www.valuetronics.com

**SERVICE SHEET BD5 (cont'd)**

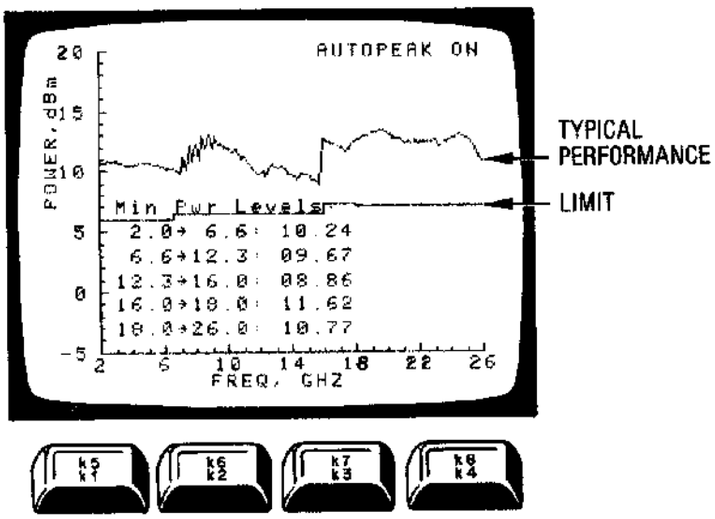


**Figure 8-43. HP 8673D Power Output Plot, K Band Amplifier In, Normal Mode**

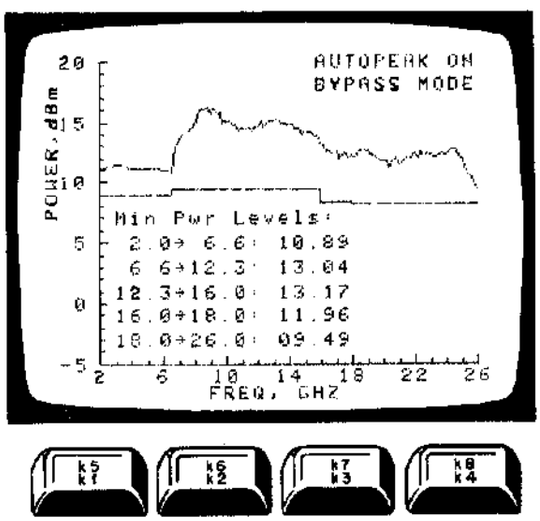


**Figure 8-44. HP 8673D Power Output Plot, K Band Amplifier In, Bypass Mode**



www.valuetronics.com

**SERVICE SHEET BD5 (cont'd)**

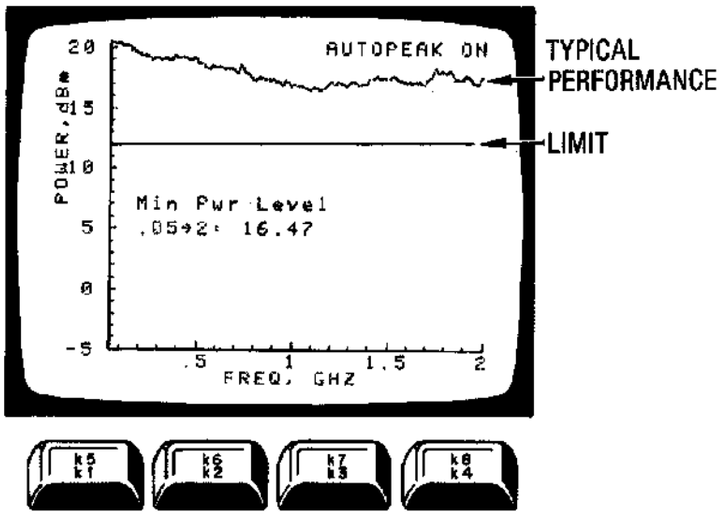


**Figure 8-45. HP 8673C/D Low Band Power Plot**

**Table 8-14. HP 8673C Power Failure Modes**

| Mode | Probable Cause | Action |
|---|---|---|
| BYPASS | A1K2 or A1DC1 faulty | Go to Service Sheet 17 |
| NORMAL | All frequencies: A1K2 or A1DC1 faulty | Go to Service Sheet 17 |
| | Low in some bands only: A5K1, A5K1 filter or A5A6 faulty | Go to Step 23 |
| LOW BAND | 4.2 GHz oscillator modulators, mixer A5K1 to A5K2 | Go to Step 23 |

24. Place Card Cage A5MP39 in the servicing position (see Service Sheet B). Remove Switch Driver Assembly A5A6 and replace it on a 48 pin extender board.

25. Refer to Table 8-16. Set the Signal Generator to each frequency at which power is low and, for each, check the indicated XA6 connector pins for the corresponding logic levels. This checks out that part of the Switch Driver Board that drives relays A5K1 and A5K2.

### YIG Tuned Band Pass Filter (YTF) Fault Isolation

At this point we know we have a problem with the 6—22 GHz YTF or with the circuits driving it. The following procedures isolate the problem to one of the following:

- Switch Driver Board A5A6 (Service Sheets 36 and 41)
- YIG Driver Board A5A1 (Service Sheet 38)
- YTF (Service Sheet 17)

26. With A5A6 still on an extender card, set the Signal Generator to the frequencies shown in Table 8-17 and check the pins shown for the corresponding logic levels.

    If the logic levels are not as shown, switch driver A5A6 is defective. Go to Service Sheet 41.

    If the logic levels are as shown, proceed with Step 27.

27. With A5A6 still on an extender card, connect the DVM to XA6-9 and tune the Signal Generator from 2—6 GHz.



www.valuetronics.com

## SERVICE SHEET BD5 (cont'd)

**Table 8-15. HP 8673D Power Failure Modes**

| Mode | Probable Cause | Action |
|---|---|---|
| K BAND OUT, BYPASS | A1K2, A1K1 or A1DC1 faulty | Go to Service Sheet 17 |
| K BAND OUT, NORMAL | All frequencies: A1K2, A1K1, or A1DC1 faulty | Go to Service Sheet 17 |
| | Low in some bands only: A5K1, A5K2 filter or A5A6 faulty | Go to Step 23 |
| K BAND IN, BYPASS | All frequencies: A1K2, A1K1, K BAND amp or A1DC1 faulty | Go to Service Sheet 17 |
| | Low power above 16 GHz only; A1K1 or K BAND faulty | Go to Service Sheet 17 |
| K BAND IN, NORMAL | All frequencies: A1K2, A1K1, or A1DC1 faulty | Go to Service Sheet 17 |
| | Low power in some hands only: A5K1, A5K2, filter, A5A6 or K BAND amp faulty | Go to Step 23 |
| LOW BAND | 4.2 GHz oscillator, modulators, mixer, A5K1 or A5K2 | Go to Step 23 |

The voltage should start at −6V and drop to −18V at 6 GHz.

If the voltage does not drop as indicated, the YIG Tune buffer is defective. Go to Service Sheet 36.

If the voltage drops as indicated, YIG Tune Buffer is working normally, and the problem is either in YIG Driver Board A5A1 or in the YTF itself. To see which is at fault, proceed to the YTF Adjustment procedure in Section V and attempt to adjust the YIG Driver Board. If the end points can be adjusted, but the YTF is not linear across the band, then the YTF is probably at fault. If the end points cannot be adjusted, then the YIG Driver Board is probably at fault. If any doubt remains, try a new YIG Driver Board before replacing the YTF.

### Down Converter Fault Isolation

At this point we have low power in the low band only. The problem could be in the down converter (Service Sheet 45) or in A5K1 or A5K2 (Service Sheet 17). To isolate it is necessary to check the LO power into the down converter and low band power out of the down converter. Proceed as follows:

28. Remove the semi rigid coax from the LO input of mixer A5U1 (TPM) and connect the cable to the power meter.

29. Set the Signal Generator to 1.0 GHz and observe the power meter.

    The power should be >+10 dBm.

    If the power is not as indicated, relay A5K1 is defective; go to Service Sheet 17.

    If the power is as indicated, go to Step 32.

30. Replace the simi rigid on the LO input of mixer U1.

31. Remove the semi rigid coax from the output of directional coupler A5DC1 (TPN) and connect the power meter in its place.



www.valuetronics.com

## SERVICE SHEET BD5 (cont'd)

**Table 8-16. Switch Driver A5A6 Checks**

| Frequency GHz | XA6- | Logic Level | Logic Level Not OK | Logic Level OK |
|---|---|---|---|---|
| <2.0 | 2<br>3<br>4<br>5<br>6<br>7<br>8<br>32 | L<br>H<br>L<br>H<br>H<br>L<br>L<br>L | Go to Service Sheet 41 | Go to Down Converter Fault Isolation, step 29 |
| 2.0 to <3.6 | 2<br>3<br>4<br>5<br>6<br>7<br>8<br>32 | L<br>H<br>L<br>H<br>L<br>H<br>H<br>L | Go to Service Sheet 41 | Go to Service Sheet 17 |
| 3.6 to <6.0 | 2<br>3<br>4<br>5<br>6<br>7<br>8<br>32 | L<br>H<br>L<br>H<br>L<br>H<br>L<br>H | Go to Service Sheet 41 | Go to Service Sheet 17 |
| 6.5 to <22 | 2<br>3<br>4<br>5<br>6<br>7<br>8<br>32 | L<br>H<br>H<br>L<br>L<br>H<br>L<br>L | Go to Service Sheet 41 | Go to YIF Fault Isolation Step 25 |
| >22 (HP 8673D only) | 2<br>3<br>4<br>5<br>6<br>7<br>8<br>32 | H<br>L<br>L<br>H<br>L<br>H<br>L<br>L | Go to Service Sheet 41 | Go to Service Sheet 17 |



www.valuetronics.com

## SERVICE SHEET BD5 (cont'd)

Table 8-17. Switch Driver Checkout

| Frequency (GHz) | XA6- | Logic Level |
|---|---|---|
| 0.1 | 39 | H |
| 3.0 | 39<br>40<br>35 | L<br>H<br>H* |
| 10.0 | 40<br>41<br>35<br>36 | L<br>H<br>L*<br>H* |
| 14.0 | 41<br>42<br>36<br>37 | L<br>H<br>L*<br>H* |
| 23.0<br>HP 8673D only) | 42<br>37 | L<br>L* |

*High ≈ −1V; Low ≈ −39V
Signals without asterisks are TTL levels.

32. With the Signal Generator still set for 1.0 GHz (see Step 31) observe the power meter.

    The power should be ≥+12 dBm.

    If the power is not as indicated, the down converter is defective; go to Service Sheet 45.

    If the power is as indicated, relay A5K2 is defective; go to Service Sheet 17.

### Programmable Output Attenuator Check

All the power plots run through the HP-IB controller set this attenuator for zero attenuation. Therefore, if you seem to be having power problems but the plots are OK, it is possible that the programmable attenuator is defective. To thoroughly check this attenuator perform the Low Level accuracy portion of the OUTPUT LEVEL test in Operation Verification in Section IV.



www.valuetronics.com

FIG. 8-46
SHT 1 of 4

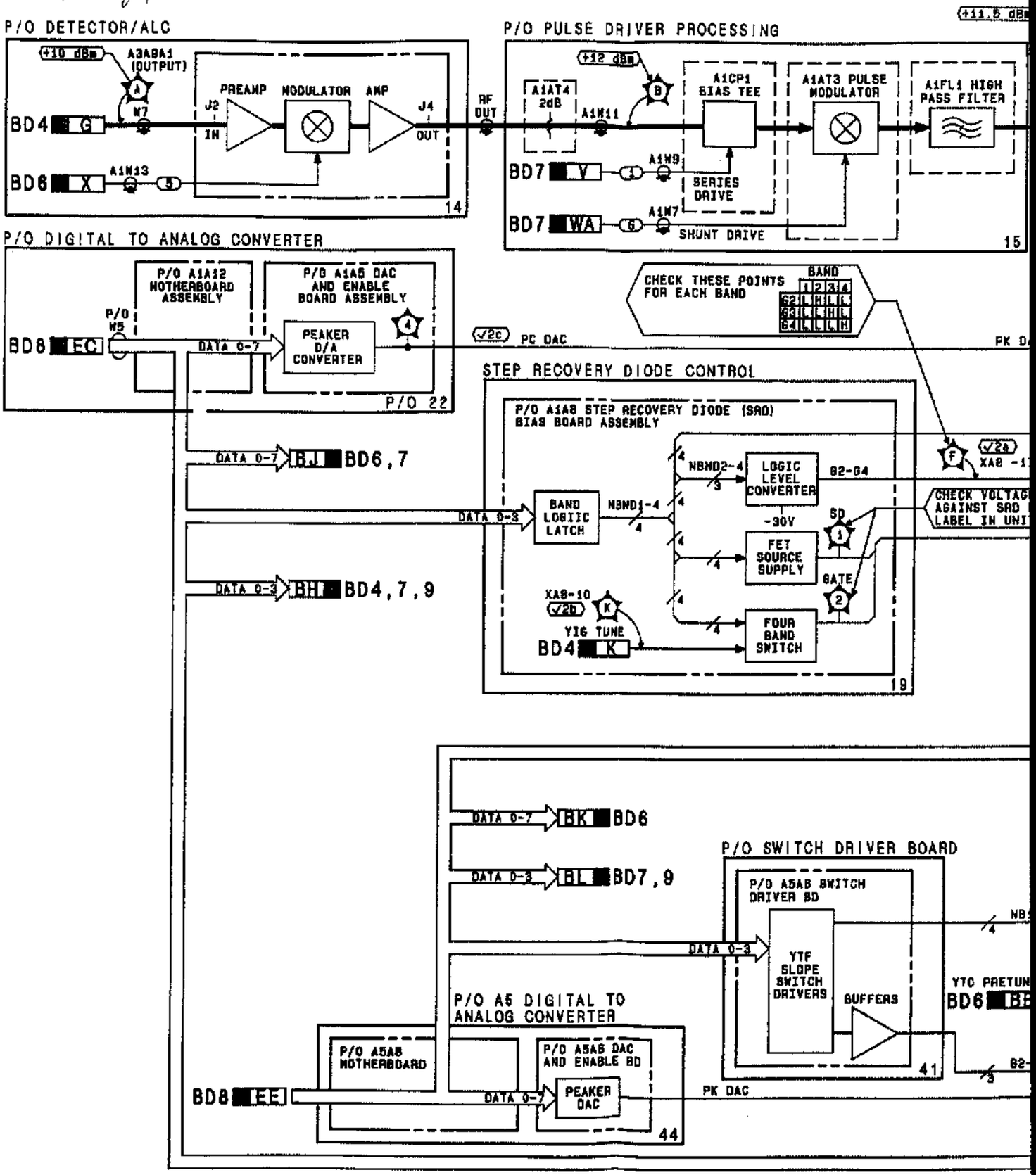


www.valuetronics.com

FIG. 8-46
Sht 2 of 4

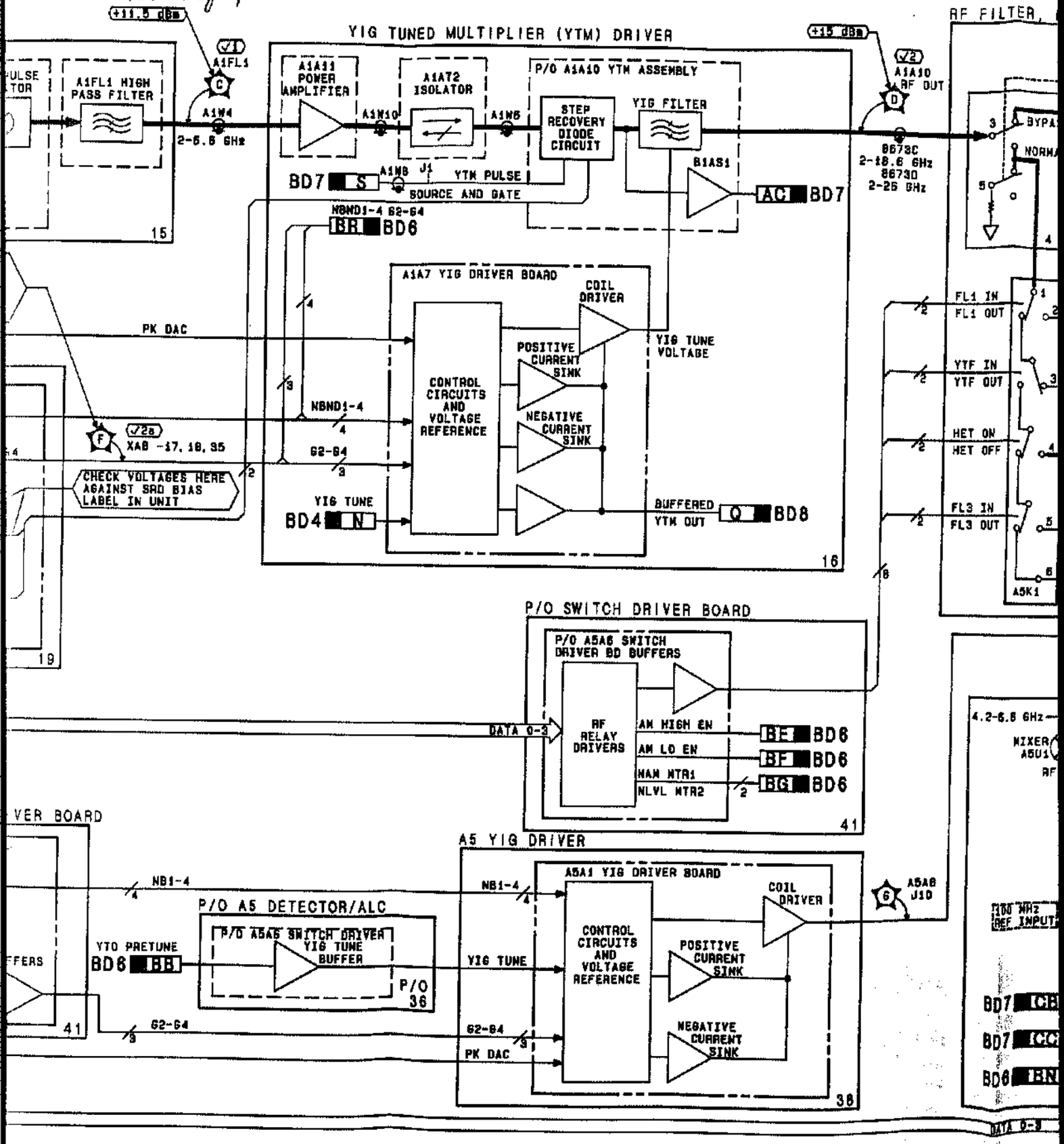


www.valuetronics.com

Fig. 8-46
Sht 3 of 4

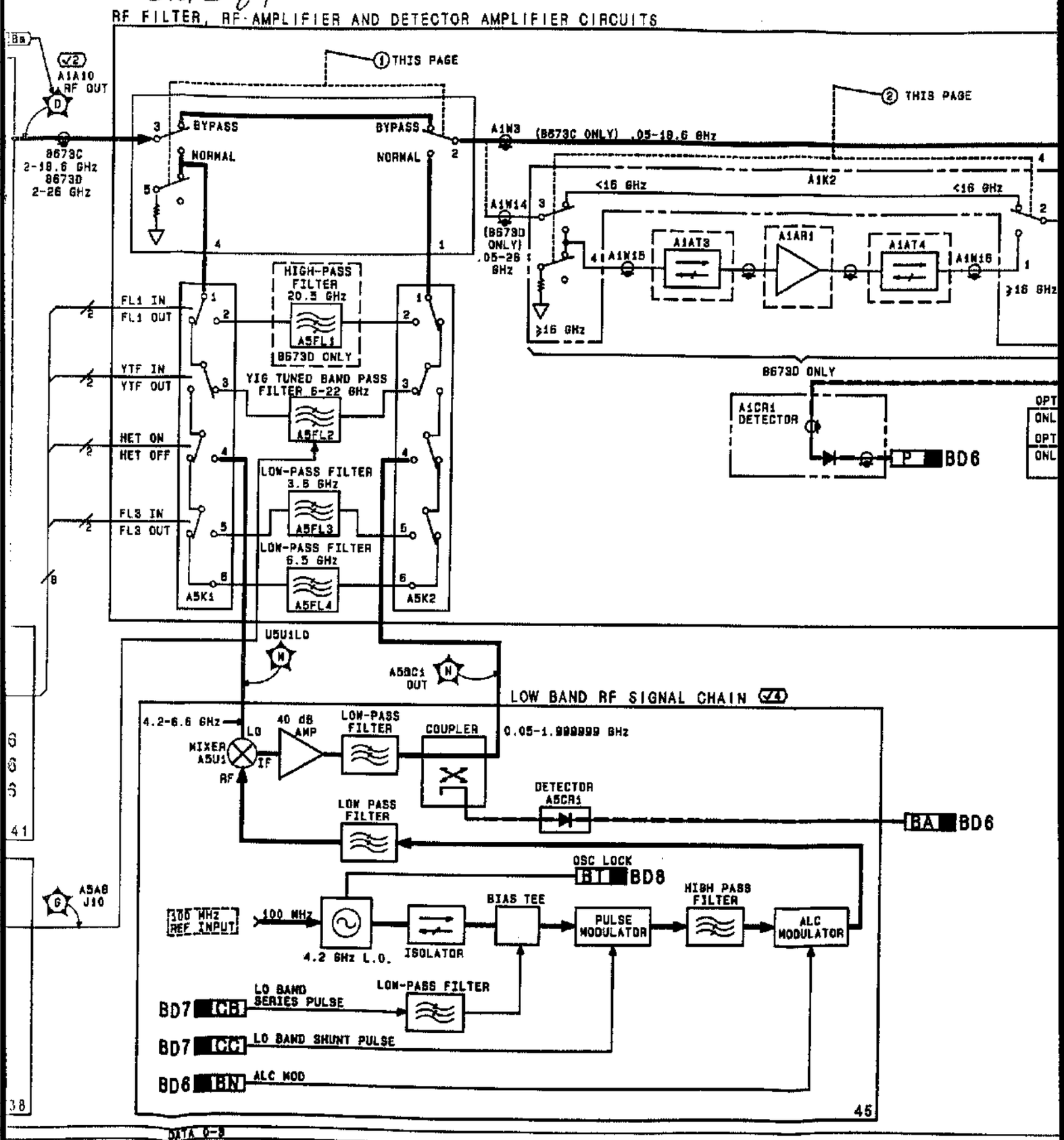


Fig

www.valuetronics.com

FIG. 8-46
SHT 4 of 4

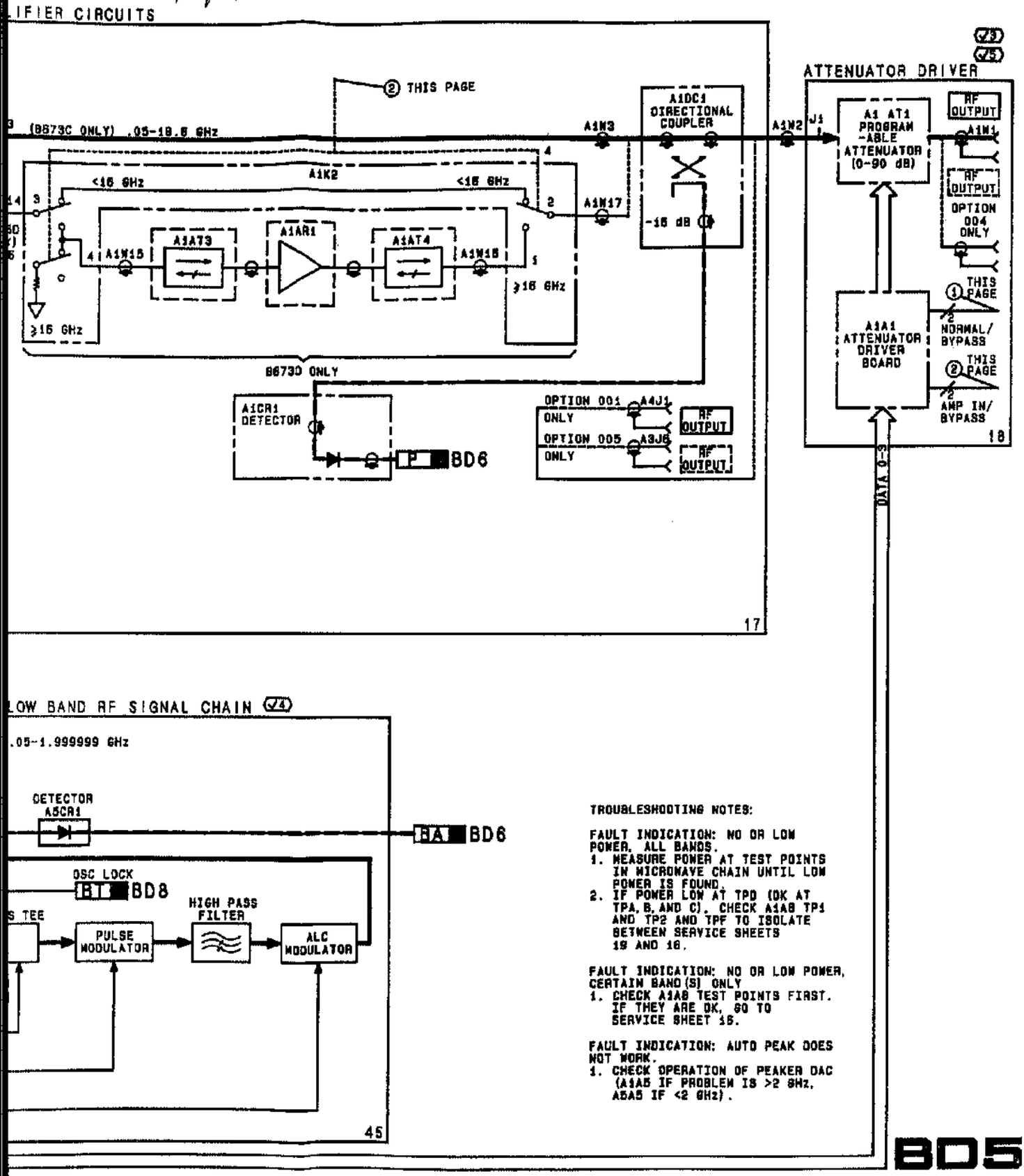


Figure 8-46. HP 8673C/D Microwave Signal Path, Block Diagram



www.valuetronics.com

## SERVICE SHEET BD6
## ALC LOOP

### REFERENCES

- Overall Block Diagram and Troubleshooting, BD1 ..... Service Sheet BD1
- Disassembly Procedures ..... Service Sheets A & B
- Interior Views ..... Service Sheets C & D
- Illustrated Parts Breakdown (IPB) ..... Section VI
- Post Repair Adjustments ..... Section V

### PRINCIPLES OF OPERATION

The primary functions of the ALC loop are to provide accurately calibrated output power and wideband linear AM capability. In addition, an extenal ALC input makes it possible to level the power actually delivered to a remote load.

To accurately control the output power of the Signal Generator in the internal ALC mode, a portion of the RF output is fed to the detector by means of a broad band directional coupler. The logarithmically amplified detector output is summed with the reference voltage at the ALC summing junction. The summing junction is the input to the integrator. The output of the integrator is routed through an exponentiator and applied to the ALC modulator to control the RF output power. The AM signal is summed into the summing junction during AM operation.

During internal ALC operation in the local mode, the active inputs to the Reference Amplifier on A1A2A1, ALC Board A1A2A1 are:

- F Correct
- ALC reference

The F Correct input compensates for the decrease in RF power with increase in frequency due to an increase in losses in the detector, the coupler, the attenuator and connecting hardware.

The ALC Reference input is the reference voltage from the front panel VERNIER control.

The output of the Reference amplifier is summed with the other active inputs in the ALC summing junction.

The detector output is directly proportional to the output power in watts. To make the detector output proportional to output power in dB, the detector output is routed through a logrithmic amplifier prior to being applied to the ALC summing junction. This conversion provides a linear reference voltage to control power out in dB.

During AM operation the AM input signal is routed through a log amplifier prior to being applied to the ALC summing junction. This provides linear, calibrated AM independent of RF output level and modulation depth.

External ALC operation is essentially the same as internal ALC. Note, however that the EXT ALC signal is routed through an absolute value amplifier prior to being applied to the log amplifier. The output of this amplifier is negative regardless of the input polarity. This allows any type of external reference, regardless of polarity, to be used and still get the necessary negative input required by the ALC circuitry.



www.valuetronics.com

In external ALC, the detector output is ac coupled into the external ALC summing junction. This serves the dual function of speeding up the external ALC response and of stabilizing the external ALC loop. When operating in band 1 in external ALC, a clamp circuit limits the power applied to the YTM to prevent spurious response.

The ALC and AM circuits associated with the low band (50 MHz—2 GHz) are identical to the circuits used in the high bands (2—26 GHz). The Front Panel Board contains switches that direct the AM and external ALC signals to the appropriate circuits.

## TROUBLESHOOTING

### General

It is assumed that the troubleshooting procedures associated with BD1 have been used to isolate a problem to the low band or high bands AM or ALC. The following procedures can be used to further isolate the problem to one of the following assemblies.

High Bands AM
- Front Panel Assembly—Service Sheet 40
- Function Board Assembly—Service Sheet 20

Low Band AM
- Front Panel Assembly—Service Sheet 40
- A5 Function Board Assembly—Service Sheet 42

High Bands Internal ALC
- DAC and Enable Board Assembly—Service Sheet 22
- Function Board Assembly—Service Sheet 20
- YIG Driver Board Assembly—Service Sheet 16
- SRD Bias Board Assembly—Service Sheet 19
- ALC Board Assembly—Service Sheet 14
- Detector Board Assembly—Service Sheet 17

High Bands External ALC
- Front Panel Assembly—Service Sheet 40
- Function Board Assembly—Service Sheet 20

Low Band Internal ALC
- A5 DAC and Enable Board—Service Sheet 44
- Detector/ALC Assembly—Service Sheet 36
- A5 Function Board Assembly—Service Sheet 42
- A5 Detector Board Assembly—Service Sheet 39

Low Band External ALC
- Front Panel Assembly—Service Sheet 40
- Function Assembly—Service Sheet 42
- Detector Board Assembly—Service Sheet 39

### Test Equipment

| | |
|---|---|
| Oscilloscope | HP 1980A |
| Digital Voltmeter (DVM) | HP 3456A |
| Test Oscillator | HP 3335A or HP 654B |



www.valuetronics.com

## SERVICE SHEET BD6 (cont'd)

### Troubleshooting Procedure

The following troubleshooting procedure is divided into the following checks:

High Bands Checks
- F CORRECT Check (✓1)
- ALC Reference Check (✓2)
- Detector Check (✓3)
- ALC Modulator Drive Check (✓4)
- External ALC Check (✓5)
- AM Check (✓6)
- LVL Meter Check (✓7)
- AM Meter Check (✓8)

Low Band Checks
- A5 ALC Reference Check (✓9)
- A5 Detector Check (✓10)
- A5 ALC Modulator Drive Check (✓11)
- A5 External ALC Check (✓12)
- A5 AM Check (✓13)
- A5 LVL Meter Check (✓14)

### Troubleshooting Hints

**High Bands vs. Low Band Problems.** The high bands ALC and AM circuits are entirely separate from the low band ALC and AM circuits. Therefore, if your problem is in the high bands only (or the low band only) use only the high bands or low band checks, as appropriate.

**ALC in Remote Mode.** If the ALC reference level cannot be controlled in remote mode (but works normally in local mode) the problem is with the Level Control DAC, Local/Remote Switch, or the Level Comparator on the DAC & Enable Board, Service Sheet 22 (high bands) or Service Sheet 44 (low band).

**Level Meter.** If the ALC and AM circuits seem to be working normally, but the level meter does not track the VERNIER control and/or does not track AM input level changes, proceed directly to the High Bands or Low Band Meter Checks beginning with Step 18 for the High Bands or Step 43 for the Low Band.

### High Bands Checks

**Internal ALC.** This procedure first checks the F CORRECT and ALC REF inputs to the ALC Board and provides troubleshooting procedures to isolate any problems encountered.

Next the ALC loop feedback is removed by disconnecting the detector from the Detector Board input. A variable DC voltage is then



www.valuetronics.com

applied to this input. TPB and TPC are then checked to isolate the problem to the Detector Board, the ALC Board or the ALC/AM Modulator.

### F CORRECT Checks. (1)

1. Remove A1A8 and replace it on a 36 pin extender card. Set the Signal Generator frequency to 2.0 GHz, and then to 6.5GHz. Check the voltage at XA8-15 (TPA) at each frequency.

   The voltages should be as shown below:

| Frequency | Voltage |
|---|---|
| 2.0 GHz | −0.003 ±0.002V |
| 6.5 GHz | +0.2 ±0.1V |

   If the voltages are correct, proceed with Step 3.

   If the voltages are not correct, proceed with Step 2.

2. Connect the DVM to A1A7TP2 and set the Signal Generator frequency to 2.0 GHz then to 6.5 GHz and observe the voltage at each frequency.

   The voltages should be as shown below.

| Frequency | Voltage |
|---|---|
| 2.0 GHz | −1.8V |
| 6.5 GHz | −3.5V |

   If the voltages are as shown, A1A8 is at fault, proceed to Service Sheet 19 to isolate the problem.

   If the voltages are not as shown, A1A7 is at fault, proceed to Service Sheet 16 to isolate the problem.

### ALC Reference Checks. (2)

A. Internal ALC Reference Check

3. Connect the DVM to A1A5TP10, ALC REF, and turn the Vernier control fully CW then fully CCW while observing the DVM.

   The voltages should be as follows:

| Vernier Position | Voltage |
|---|---|
| fully CW | 0.0V |
| fully CCW | −7.5V (typical) |

   If the voltages are as shown, A1A5 is working normally, proceed with Step 4.

   If the voltages are not as shown, proceed with Step 5.

B. Remote ALC Reference Check

4. Connect the DVM to A1A5TP8 and turn the Vernier control fully CW then fully CCW while observing the DVM.

   The voltages should be as follows:



www.valuetronics.com

| Vernier Position | Voltage |
|---|---|
| fully CW | 0.0V |
| fully CCW | +5.8V (typical) |

If the voltages are as shown, A1A5 is working normally, proceed with Step 6.

If the voltages are not as shown, proceed with Step 5.

5. Connect the signature analyzer as directed in paragraphs 5 and 6, DAC and Enable Board A1A5 Test of BD8. Verify the signatures of the input signals NSTRB, address lines BA0—3, data lines DATA0—7 as shown in Table 8-46 of BD8.

   If the signatures are not correct, go to BD8 for troubleshooting.

   If the signatures are correct, A1A5 is defective. Go to Service Sheet 22 for troubleshooting.

**Detector Checks (3)**

6. Press RCL0 and turn RF power off. Adjust A1A2A2R12 (INT OS) for a voltage reading at A1A2A2C6 (TPB) of −0.92V.

7. Remove detector A1CR1 from A1A2A2J1.

8. Set variable power supply to zero volts and connect the positive output to the center conductor of A1A2A2J1 and the negative output to ground.

9. Turn RF OUTPUT ON and turn vernier fully ccw.

10. Connect DVM to A1A2A2C6 (TPB) and gradually increase the power supply output voltage while observing the DVM.

    The voltage at TPB should vary as shown below.

| Power Supply Voltage | TPB Voltage |
|---|---|
| 0.005 | −0.09V |
| 0.010 | +0.01V |
| 0.015 | +0.07V |
| 0.020 | +0.10V |

If the voltages are correct, the Detector Board is operating normally, proceed with step 11.

If the voltages are not correct, the A1A2A2 Detector is at fault. Proceed to Service Sheet 17 to isolate the problem.

**ALC Modulator Drive Checks. (4)**

11. Remove A1A2 and replace it on a 36 pin extender card.



www.valuetronics.com

**SERVICE SHEET BD6 (cont'd)**

12. Remove the cable from A1A2A1J1 (TPC) and connect a tee in its place.

13. Connect a 50 ohm load and the DVM to the remaining legs of the tee.

14. With the power supply still connected to A1A2A2J1, set the voltage to zero and gradually increase it. The voltage at TPC should vary as shown below:

| Power Supply Voltage | TDP Voltage |
|---|---|
| 0.000 | <−3.0V |
| 0.0075 | ≈+0.9V |
| 0.0225 | ≈+9.0V |

If the voltages are correct, the ALC modulator is at fault. Replace it.

If the voltages are not correct, Detector/ALC board A1A2A1 is at fault. Go to Service Sheet 14 to isolate the problem.

**External ALC Checks.** (✓5)

If the Signal Generator is operating normally in internal ALC mode but will not level in external ALC mode, the problem is limited to either Front Panel Assembly A5A1, or Function Board Assembly A1A3. Therefore it is only necessary to see if the external ALC signal is getting from the Front Panel Assembly to the Function Board Assembly in order to isolate the problem.

15. Set the Signal Generator for external ALC (POWER METER) and connect the test equipment as shown in Figure 8-47.

16. Set the Test Oscillator for 10 Hz at 1 volt p-p.

17. Remove Function Board A1A3 and replace it on a 44 pin extension board.

18. Connect the oscilloscope to XA3-22 (TPG).

The scope should show a 10 Hz sine wave at 1 volt p-p.

If the oscilloscope display is correct, Funtion Board A1A3 is at fault. Proceed to Service Sheet 20 to isolate the problem.

If the oscilloscope display is not correct, Front Panel Assembly A5A1 is defective. Proceed to Service Sheet 40 to isolate the problem.

**AM Checks.** (✓6)

If the Signal Generator cannot be AM modulated but the internal ALC circuits are functioning normally, the problem is limited to either Front Panel Assembly A5A1, Service Sheet 40 or Function Board Assembly A1A3, Service Sheet 20. Therefore, it is only necessary to see if the AM input signal is getting from the Front Panel Assembly to the Function Board Assembly to isolate the problem.

19. Set the Signal Generator for AM 100% and connect the test equipment as shown in Figure 8-48.

20. Set the test oscillator for 10 Hz at 1 volt p-p.

21. Remove Function Board A1A3 and replace on a 44 pin extension board.

22. Connect the oscilloscope to XA3-13 (TPH) and observe the display.

The oscilloscope display should show a 10 Hz signal at approximately 1 volt p-p.

If the display is correct, the Function Board is at fault, proceed to Service Sheet 20 to isolate the problem.

If the display is not correct, the Front Panel Assembly is at fault, proceed to Service Sheet 40 to isolate the problem.

**LVL and AM Meter Checks**

These procedures are used if the ALC circuitry seems to be working normally (eg. ALC UNLE-

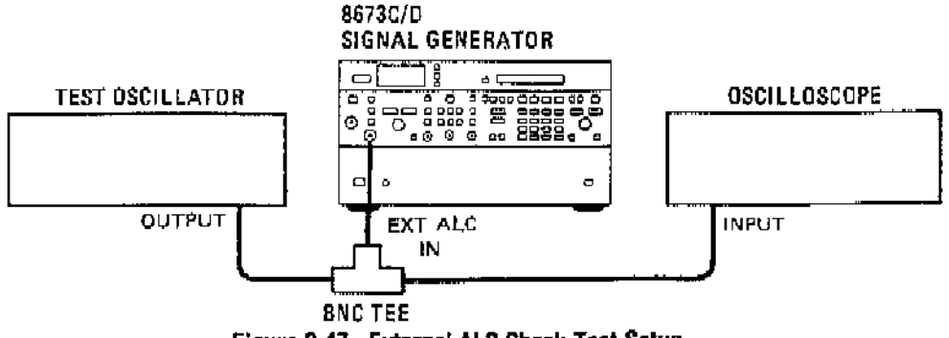


**Figure 8-47. External ALC Check Test Setup**



www.valuetronics.com

## SERVICE SHEET BD6 (cont'd)

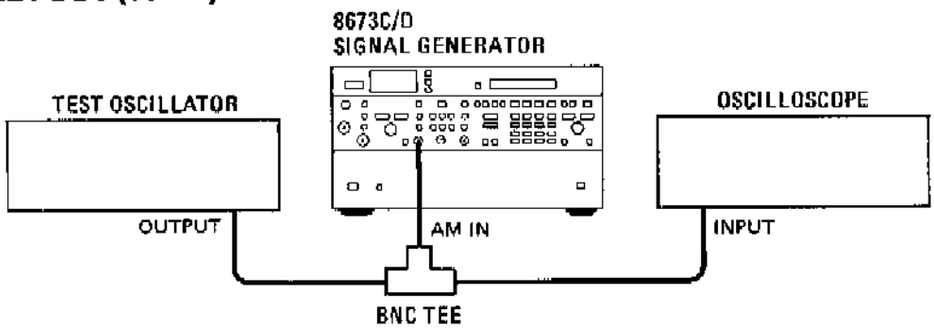


**Figure 8-48. AM Check Test Setup**

VELED not on, output level varies with VERNIER) but the meter does not respond at all or responds improperly to the VERNIER control or to variations in AM input levels.

For LVL meter faults the problem could be one of the following:

Defective error amp on A1A2A1
Defective meter level circuit on A1A3
Defective FET switch on A1A6
Defective switch on A5A1

For AM meter faults the problem could be:

Defective AM metering circuit or FET switch on A1A6
Defective switch on A5A1

**LVL Meter Checks.** (✓7)

23. Remove A1A2 and replace it on a 36 pin extender board.

24. Connect DVM to A1A2A1TP5, press RCL 0 and turn VERNIER control fully CW then fully CCW while observing the DVM indication. The indicated voltage should be constant at approximately 0.15V. Verify that A1A2A1TP2 is approximately 0.0V. Press PULSE NORM and check that TP2 changes to approximately −6.0V. Press PULSE OFF. Connect DVM to A1A2A1TP5 and press PULSE NORM. The DVM should indicate the voltage increasing by approximately 0.05V/s.

    If the voltage is increasing as indicated, the error amplifier is operating normally, replace A1A2 and proceed with step 25.

    If the voltage is not increasing as indicated, the error amplifier is defective, go to Service Sheet 14 to isolate the problem.

(✓7a)

25. Remove A1A3 and replace it on a 44 pin extender board.

26. Connect the DVM to XA3-11 (TPN) and observe the DVM display while turning the VERNIER control from full CW to full CCW.

    The voltage at the two extreme points should be as follows:

| Vernier | TPN Voltage |
|---|---|
| Fully CW | 3.5V |
| Fully CCW | 9.0V |

    If the voltages are as indicated, the meter level circuit is working normally, install A1A3 and proceed with step 27.

    If the voltages are not as indicated, the meter level circuit is defective, go to Service Sheet 20 to isolate the problem.

(✓7b)

27. Remove A1A6 and replace it on a 36 pin extender board.

28. Set Signal Generator front panel meter for LVL and connect DVM to XA6-8 (TPR). Turn VERNIER control from full CW to full CCW while observing to DVM indication.

    The voltage should be the same as shown under step 26.

    If the voltages are correct, the switch in A5A1 is defective. Go to Service Sheet 40.

    If the voltages are not correct, A1A6 is defective. Go to Service Sheet 21.

**AM Meter Checks.** (✓8)

29. Remove A1A6 and replace it on a 36 pin extender board.



www.valuetronics.com

**SERVICE SHEET BD6 (cont'd)**

30. Set Signal Generator front panel meter to AM 100%.

31. Set test oscillator for 100 Hz at 1V peak and connect the test oscillator output to the AM in connector.

32. Connect the DVM to XA6-8 (TPR) and observe the DVM display.

    The DVM should indicate 3.7 volts.

    If the voltage is as indicated, the switch in A5A1 is defective, go to Service Sheet 40.

    If the voltage is not as indicated, A1A5 is defective. Go to Service Sheet 21.

### Low Band Checks

**Internal ALC.** This procedure first checks the ALC REF input to the ALC Board. If this is good, open the ALC loop by disconnecting the detector from the Detector Board input. A variable DC voltage is then applied to this input and TPJ and TPD are checked to isolate the problem to the Detector Board, the ALC Board or the ALC/AM Modulator.

#### A5 ALC Reference Checks. (✓9)

33. Connect the DVM to A5A5TP10 then turn the VERNIER control fully CW then fully CCW while observing the DVM.

    The voltage should be as follows:

| Vernier Position | Voltage |
|---|---|
| Fully CW | 0.0V |
| Fully CCW | −7.5V (typical) |

    If the voltages are as shown, A5A5 is working normally, proceed with step 34.

    If the voltages are not as shown, A5A5 is defective. Proceed to Service Sheet 44 to isolate the problem.

#### A5 Detector Checks. (✓10)

34. Remove detector from A5A2A2J1.

35. Set variable power supply to zero volts and connect the positive output to the center conductor of A5A2A2J1 and the negative output to ground.

36. Connect DVM to A5A2A2C6 (TPJ) and gradually increase the power supply output voltage while observing the DVM.

    The voltage at TPJ should vary as shown below:

| Power Supply Voltage | TPJ Voltage |
|---|---|
| 0.005 | −0.09V |
| 0.010 | +0.10V |
| 0.015 | +0.07V |
| 0.02 | +0.1V |

    If the voltages are correct, the Detector Board is operating normally, proceed with step 37.

    If the voltages are not correct, the Detector Board is at fault. Proceed to Service Sheet 39 to isolate the problem.

#### A5 ALC Modulator Drive Checks. (✓11)

37. Remove A5A2 and replace it on a 36 pin extender card.

38. Remove the cable from A5A2A1J1 (TPD) and connect a tee in its place. Connect the DVM and a 50 ohm load to the tee.

39. With the power supply still connected to A5A2A2J1, set the voltage to zero and gradually increase it.

    The voltage at TPD should vary as shown below:

| Power Supply Voltage | TPD Voltage |
|---|---|
| 0.0 | <0.3V |
| 0.0095 | ≈0.9V |
| 0.0225 | ≈0.9V |

    If the voltages are correct, the ALC modulator is at fault. Replace it.

    If the voltages are not correct, ALC Board A5A2A1 is at fault. Go to Service Sheet 36 to isolate the problem.

#### A5 External ALC Checks. (✓12)

If the Signal Generator is operating normally in internal ALC mode but will not level in external ALC mode, the problem is limited to either Front Panel Assembly A5A1, or Function Board Assembly A5A3. Therefore it is only necessary to see if the external ALC signal is getting from the Front Panel Assembly to the Function Board Assembly in order to isolate the problem.

40. Set the test oscillator for 10 Hz sine wave at 1 volt p-p.

41. Set the Signal Generator for external ALC, POWER METER and connect the test oscillator output to the EXT ALC in connector.



www.valuetronics.com

**SERVICE SHEET BD6 (cont'd)**

42. Remove Function Board A5A3 and replace it on a 44 pin extension board.

43. Connect the oscilloscope to XA5A3-22 (TPL).

    The scope should show a 10 Hz sine wave at 1 volt p-p.

    If the oscilloscope display is correct, Function Board A5A3 is at fault, proceed to Service Sheet 42 to isolate the problem.

    If the oscilloscope display in not correct, Front Panel Assembly A5A1 is defective. Proceed to Service Sheet 40 to isolate the problem.

**A5 AM Checks.** (✓13)

If the Signal Generator cannot be AM modulated but the internal ALC circuits are functioning normally, the problem is limited to either Front Panel Assembly A5A1, or Function Board Assembly A5A3. Therefore, it is only necessary to see if the AM input signal is getting from the Front Panel Assembly to the Function Board Assembly to isolate the problem.

44. Set the test oscillator for 10 Hz at 1V p-p.

45. Set the Signal Generator for AM and connect the test oscillator to the AM in connector.

46. Remove Function Board A5A3 and replace on a 44 pin extension board.

47. Connect the oscilloscope to XA5A3-13 (TPM) and observe the display.

    The oscilloscope display should show a 10 Hz signal at 1V p-p.

    If the display is correct, the Function Board is at fault, proceed to Service Sheet 42 to isolate the problem.

    If the display is not correct, the Front Panel Assembly is at fault, proceed to Service Sheet 40 to isolate the problem.

**A5 LVL Meter Checks.** (✓14)

This procedure is used if the ALC circuitry seems to be working normally (eg. ALC UNLEVELED not on, output level varies with VERNIER) but the meter does not respond at all or responds improperly to the VERNIER control or to variations in AM input levels.

For LVL meter faults, the problem could be one of the following:

Defective error amp on A5A2A1.
Defective meter level circuit on A5A3
Defective switch on A5A1

For AM meter faults the problem can only be a defective AM meter amp or switch on A5A1.

48. Remove A5A2 and replace it on a 36 pin extender board. Reconnect the detector using an extender cable.

49. Connect DVM to A5A2A1TP5. Turn VERNIER control fully CW then fully CCW while observing the DVM indication. The voltage should be constant at approximately 0.15V. Verify that the voltage at A1A2A1TP2 is approximately 0V. Press PULSE NORM and check that the voltage changes to about −6V. Press PULSE OFF. Reconnect DVM to A1A2A1TO5 and press PULSE NORM. The voltage should immediately begin increasing by about 0.05V/s.

    If the voltage is increasing as indicated, the error amplifier is operating normally. Replace A5A2 and proceed with step 50.

    If the voltage is not increasing as indicated, the error amplifier is defective. Go to Service Sheet 36 to isolate the problem.

(✓145)

50. Remove A5A3 and replace it on a 44 pin extender board.

51. Connect the DVM to XA5A3-11 (TPS). Observe the DVM display while turning the VERNIER control from full CW to full CCW.

    The voltage at the two extreme points should be as follows:

| Vernier | TPS Voltage |
|---|---|
| Fully CW | −3.5V |
| Fully CCW | −9.0V |

    If the voltages are as indicated, the meter level circuit is working normally, and Front Panel Assembly A5A1 is at fault, go to Service Sheet 40 to isolate the problem.

    If the voltages are not as indicated, the meter level circuit is defective, go to Service Sheet 42 to isolate the problem.



www.valuetronics.com

FIG. 8-49
Sht 1 of 4

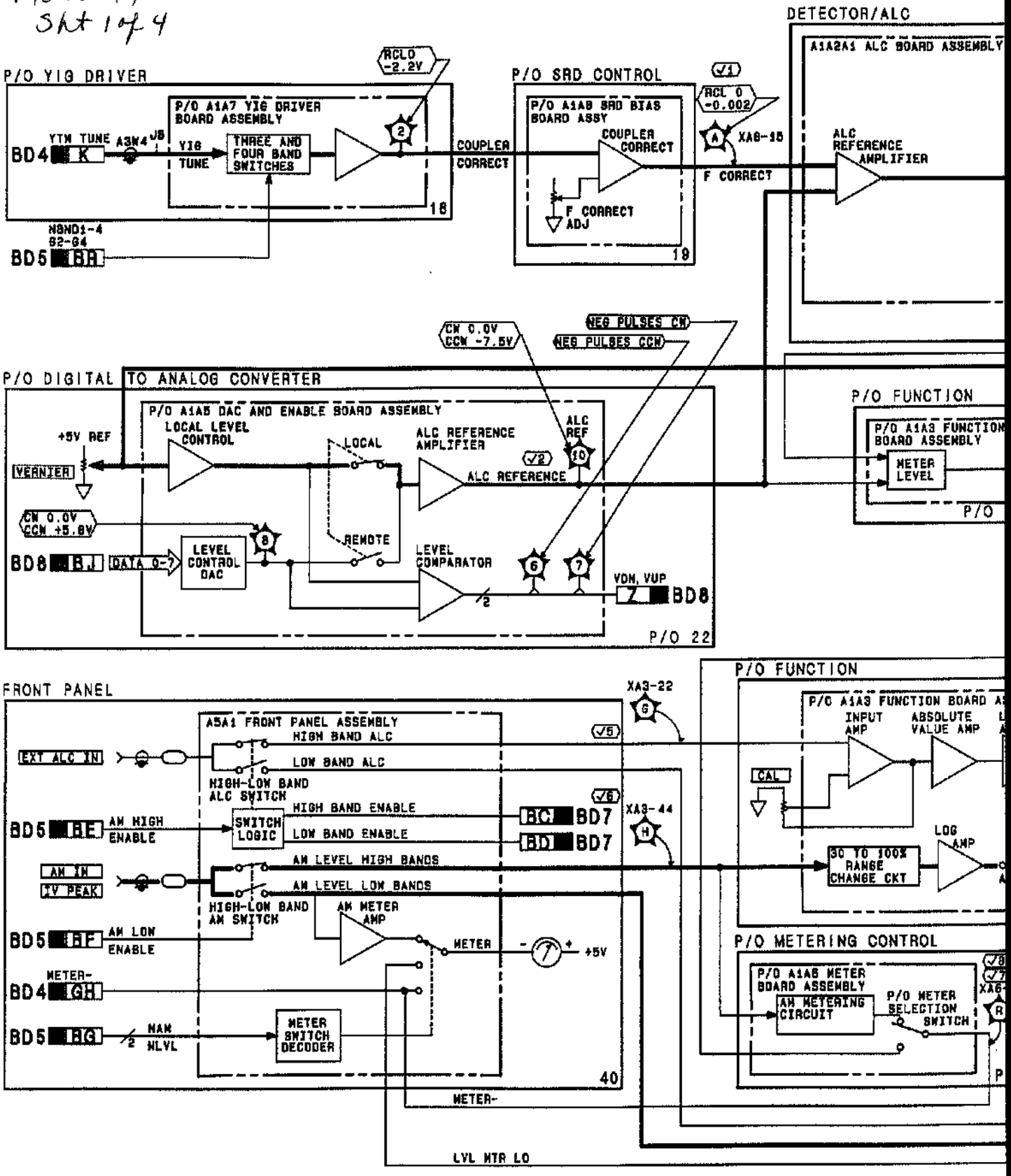


www.valuetronics.com

FIG. 8-49
SHT 2 of 4

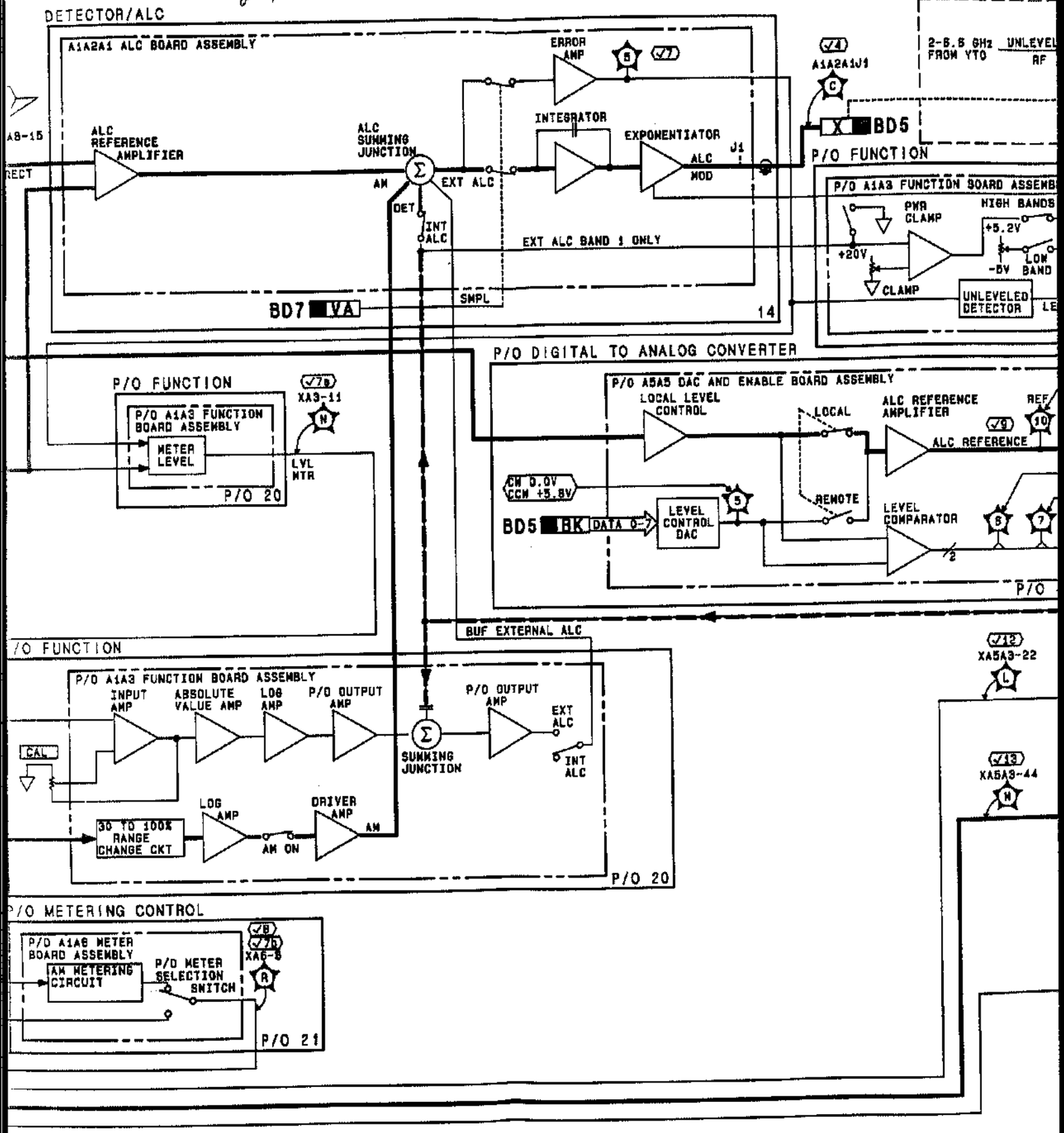


www.valuetronics.com

FIG. 8-49
Sht 3 of 4

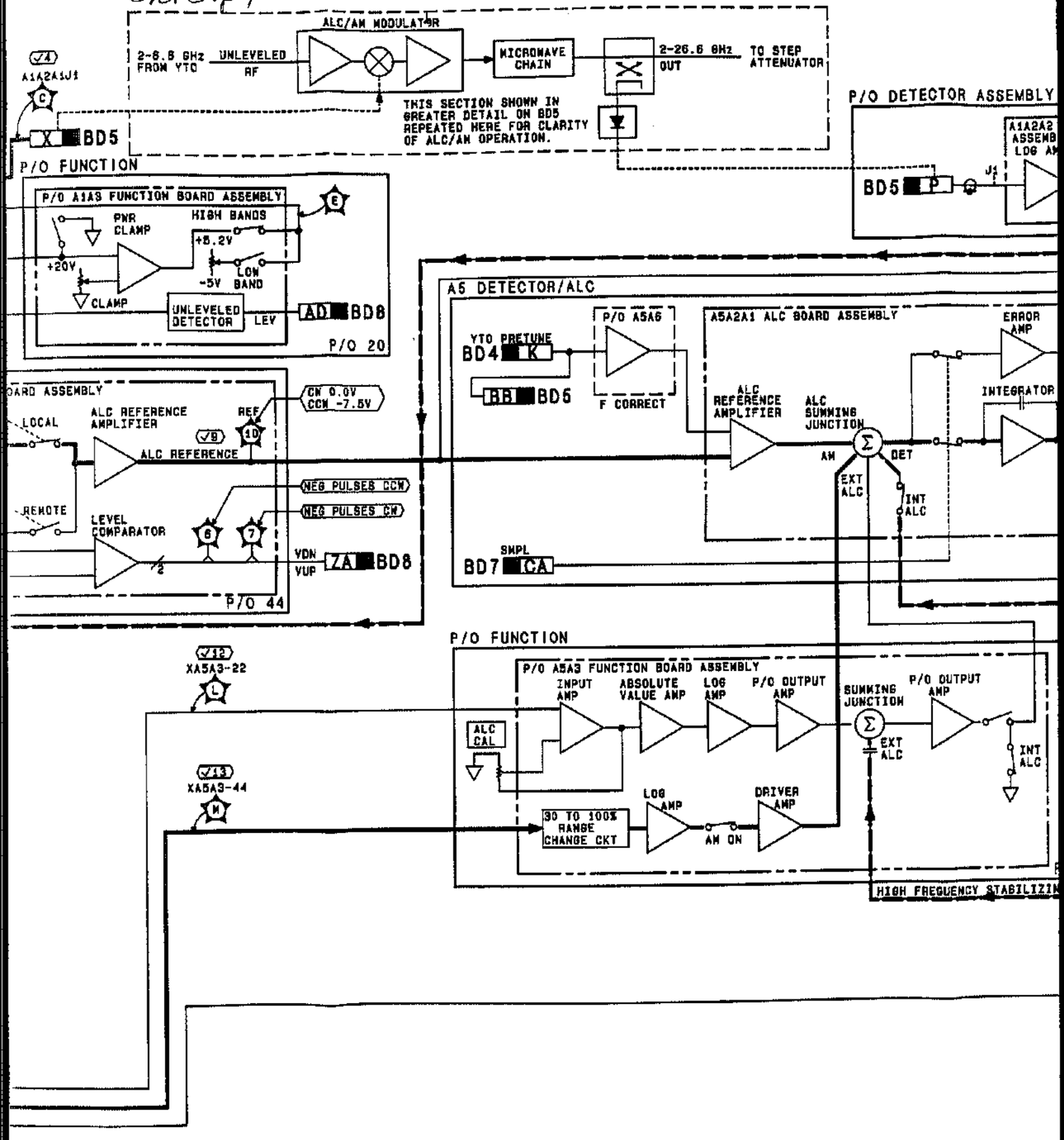


www.valuetronics.com

FIG. 8-49
SHT 4 of 4

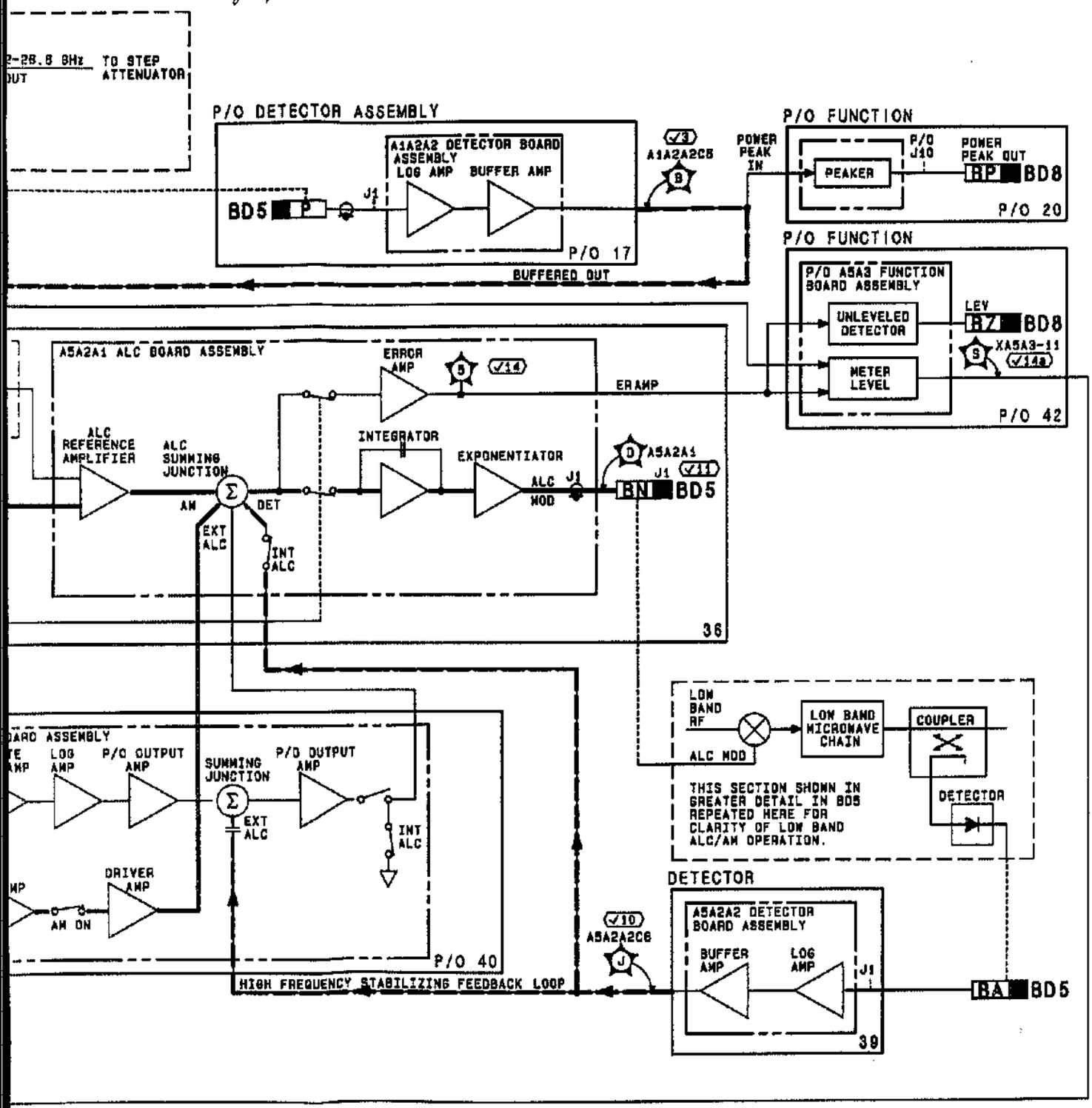


BD6

Figure 8-49. HP 8673C/D ALC Loop, Block Diagram



www.valuetronics.com

## SERVICE SHEET BD7
## PULSE MODULATION

### REFERENCES

- Overall Block Diagram and Troubleshooting, BD1 ..... Service Sheet BD1
- Disassembly Procedures ..... Service Sheets A & B
- Interior Views ..... Service Sheets C & D
- Illustrated Parts Breakdown (IPB) ..... Section VI
- Post Repair Adjustments ..... Section V

### PRINCIPLES OF OPERATION

The pulse modulation circuits provide pulse modulation in the 0.05—26 GHz frequency range.

To achieve the specified risetime of <35 ns in bands 2—4, a YTM injected pulse is used to speed up the YTM response time. Band 0 and 1 does not require the YTM injected pulse to meet this specification because the YTM internal step recovery diode is forward biased in these bands.

The series and shunt pulse drivers on the Pulse driver board turn the RF on and off by controlling the series and shunt diodes in the pules modulator. To turn the RF off, the shunt diodes in the pulse modulator are turned on and the series diode is turned off. In this configuration, the RF is directed to ground through a 50 ohm resistor and the shunt diodes. To turn the RF on, the shunt diodes are turned off and the series diode is turned on. In this configuration, the RF bypasses the 50 ohm resistor through the series diode and is routed straight through the modulator. Obviously the timing of the series and shunt pulses controlling the pulse modulator is critical.

The pulse driver board also generates the YTM injected pulse. This pulse is necessary because between RF pulses the YTM loses part its bias. If the RF pulse from the pulse modulator is applied to the YTM in this condition, the pulse risetime would suffer. The YTM pulse is applied to the YTM 50 ns before the the RF pulse arrives. Thus the YTM is properly biased when the RF pulse arrives, and the pulse risetime is degraded only by the bandwidth of the YIG filter in the YTM.

The YTM injected pulse amplitude must be varied with changes in RF power. For example, the required amplitude can change significantly if the frequency is changed by more than 50 MHz or if the power is changed by 0.4 dB or more.

To maintain the correct amplitude of the YTM injected pulse, the controller compares the steady-state SRD BIAS 1 voltage to the BIAS 2 voltage generated by the pulse amplitude control (PAC) DAC and adjusts the PAC DAC to make the two equal.

The output of the PAC DAC drives an amplifier that provides a slope and an offset voltage adjustment for each band. The dc output voltage of this amplifier controls the peak amplitude of the YTM injected pulse. The slope and offset adjustments are used to optimize the YTM pulse peak amplitude for bands 2 through 4 at all output vernier levels.

Also included in the pulse modulation system is an ALC sample and hold circuit. This circuit is used during pulse modulation (in conjunction with the ALC loop previously discussed) to maintain the correct pulse power level. During each pulse, the sample gate driver turns the FET Sample Switches on. Thus, during pulse



www.valuetronics.com

modulation operation, the ALC loop is closed only when the RF pulse is present. The integrating capacitor in the ALC integrator holds the proper dc leveling voltage during the time that the RF pulse is absent. The parameters of the sample gate pulse are adjusted for minimum error in pulse level accuracy. See Figure 8-50.

A minimum pulse width detector is included to light the ALC UNLEVELED annunciator if the pulse width is too narrow. The specified peak level accuracy at 100 ns pulse width is ±1 dB relative to the CW level. Typically, this level accuracy is maintained down to 80 ns pulse width. Pulse widths of less than 80 ns are available if unleveled power output is acceptable. The maximum pulse repetition frequency for specified level accuracy is 1 MHz. Typically, specified level accuracy is maintained for repetition rates up to 5 MHz.

Pulse modulation operation in the low band is identical to operation in the other bands except that, as in band 1, no YTM pulse is required.

## TROUBLESHOOTING

### General

It is assumed that the troubleshooting procedures associated with Service Sheet BD1 were used to isolate the problem to the pulse modulation circuitry. The following procedures may be used to further isolate the problem to one of the following.

High Bands

- A1 Pulse Driver Processing Assembly — Service Sheet 15
- A5 Pulse Driver Processing Assembly — Service Sheet 37
- DAC and Enable Assembly — Service Sheet 22
- SRD Control Assembly — Service Sheet 19
- Bias Tee/Pulse Modulator — Service Sheet 15

Low Bands

- A5 Pulse Drive Processing Assembly — Service Sheet 37
- Bias Tee/Pulse Modulator — Service Sheet 45
- A5 DAC and Enable — Service Sheet 44

### Troubleshooting Hints

Pulse modulation can be divided into three modes of operation, each with its own failure modes:

Band 1 (2—6.6 GHz). In this band, the frequency is not multiplied, therefore the SRD is forward biased and no YTM injection pulse is required. In this band there are three failure modes:

1. The Signal Generator works in CW mode but there is no pulse output. This indicates a complete failure in one of the pulse modulation circuits, probably the shunt pulse generator.

2. Inaccurate power levels. If the power level is correct in CW mode, the problem is most likely in the sample gate circuit or the sample and hold circuit on the ALC board.



www.valuetronics.com

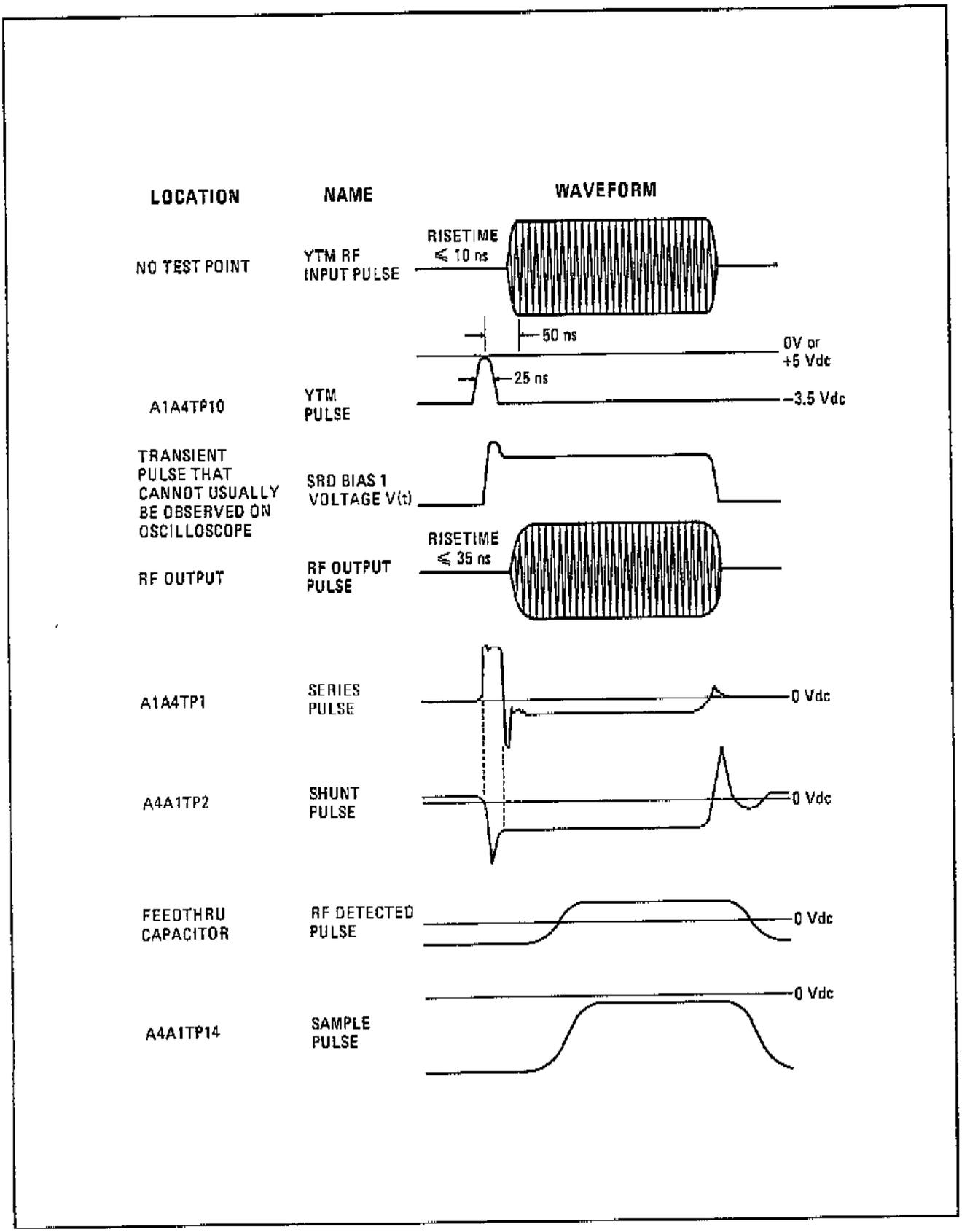


Figure 8-50. Pulse Modulation Waveforms

8-72c

www.valuetronics.com

3. Incorrect operation at minimum pulse width. Performing the adjustment procedures will usually correct this problem.

Bands 2—4 (6.6—26 GHz). In these bands the frequency is multiplied and the YTM injection pulse is critical to proper operation, especially at the high end of each band. There are four failure modes in these bands. The first three are the same as the Band 1 failure modes, the fourth is:

4. Poor pulse shape. This problem can usually be corrected by performing the pulse modulation adjustment procedures in Section V. If adjustment does not correct the problem, the YTM pulse circuitry must be checked.

Low Band (0.05—2.0 GHz). In Low Band pulse modulation there is no frequency multiplication so no YTM pulse is required. The circuitry is identical to that used for Band 1 pulse modulation, therefore the failure modes are the same.

## Troubleshooting Procedures

The following procedure is divided into checks as follows:

Initial Checks

Band 1 Checks

- Shunt Pulse Check ☑1
- Series Pulse Check ☑2
- Bias Tee/Pulse Modulator Check ☑3
- Sample Gate Check ☑4
- Level Check ☑5

High Bands (Bands 2—4) Checks

- YTM Pulse Check ☑6
- PAC DAC Check ☑7
- PAC Check ☑8

Low Band Checks

- A5 Shunt Pulse Check ☑9
- A5 Series Pulse Check ☑10
- A5 Bias Tee/Pulse Modulator Check ☑11
- A5 Sample Gate Check ☑12
- A5 Level Check ☑13

Perform the initial checks first to determine the nature of the pulse modulation failure, then proceed to the indicated procedure.

8-72d

www.valuetronics.com

## SERVICE SHEET BD7 (cont'd)

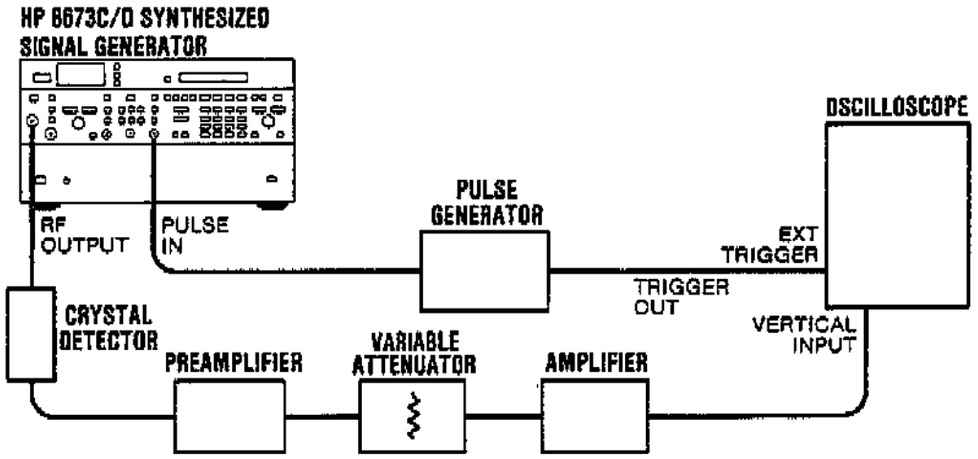


**Figure 8-51. Pulse Modulation Initial Check Test Setup**

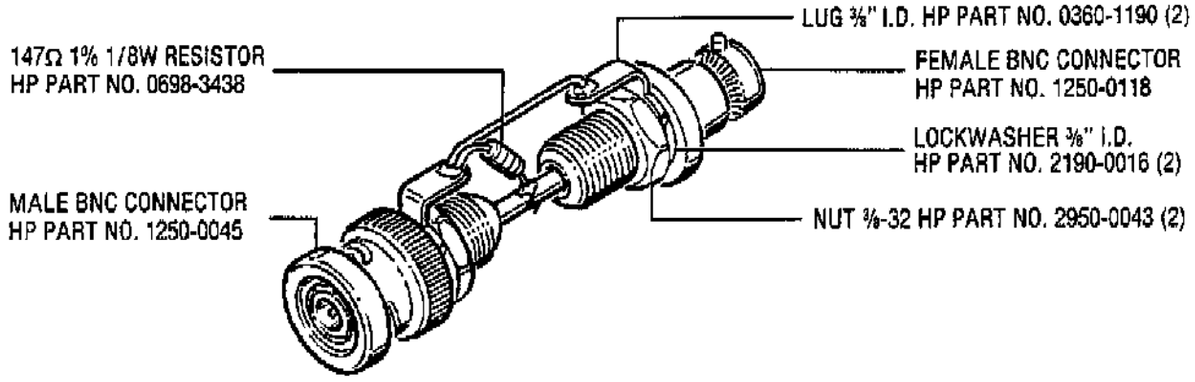


**Figure 8-52. Pulse Shunt Adapter**

**Initial Checks.** The purpose of these initial checks is to determine the failure mode of the unit under test. Once the failure mode is determined, the reader will be referred to the appropriate troubleshooting procedures.

1. Connect the equipment as shown in Figure 8-51. The shunt adapter can easily be fabricated using 2 BNC connectors and a 147 ohm resistor as shown in Figure 8-52.

2. Set the pulse generator for a 1 MHz pulse rate with a pulse width of 300 ns and pulse height of 3 volts peak. Set the variable attenuator for 10 dB attenuation.

3. On the Signal Generator press RCL 0 and PULSE NORM. Set Output Level RANGE to 0 dBm and VERNIER to 0 dBm.

4. Observe the detected pulse on the oscilloscope.

   If the pulse is absent or seriously distorted, there is a problem with the shunt or series pulse circuits, go to (✓1) Shunt Pulse Check and/or (✓2) Series Pulse Check under Band 1 Checks.

   If the detected pulse looks good, go to Step 5.

5. Bypass the preamp/amplifier as shown in Figure 8-51. Adjust the oscilloscope vertical position and sensitivity controls so that the pulse base line is one division from the bottom graticule line and approximately 5 divisions high in peak amplitude. (The Signal Generator output level may have to be increased to +8 dBm.)

6. Switch Signal Generator to CW mode.



www.valuetronics.com

**SERVICE SHEET BD7 (cont'd)**

Adjust the oscilloscope vertical sensitivity for a display 5 divisions above the pulse base line. The peak of the CW signal is now the CW peak reference level.

**NOTE**

*Do not touch the vertical position controls after the reference pulse base line has been set.*

7. Switch back to PULSE NORM.
8. Without touching the vertical sensitivity controls, measure the difference between the CW peak reference level and the average peak pulse level excluding any over/undershoot.

   The difference should be within +0.61/-0.45 division on the oscilloscope.

   If the difference is not in the range indicated, proceed with ☑4 Sample Gate Check, Step 22. Otherwise, proceed with Step 9.

9. Reduce the pulse width from the pulse generator to 100 ns and repeat Steps 5 through 7.

   If the difference is not as indicated in Step 8, proceed with Sample Gate Check ☑4, Step 22. Otherwise, proceed with Step 10.

10. Set the Signal Generator frequency to 1.0 GHz and observe the detected pulse on the oscilloscope.

    If the detected pulse is absent or distorted, go to ☑9 A5 Shunt Pulse Check and/or ☑10 A5 Series Pulse Check in Low Band checks.

    If the pulse looks good, proceed with Step 11.

11. Repeat the pulse level check in Steps 5, 6, & 7 for a 300 ns pulse and a 100 ns pulse. If either is not as indicated in Step 8, proceed with ☑12 A5 Sample Gate Check, Step 45. Otherwise, proceed with Step 12.

12. Set the pulse from the pulse generator to 300 ns.

13. Set the Signal Generator to each of the frequencies shown below, and for each frequency check the detected pulse rise time, fall time, and overshoot and ringing.

    Frequencies

    12.0 GHz
    18.0 GHz
    26.0 GHz (8673C/D only)

    In each case the rise and fall time should be less than 40 ns, and the overshoot and ringing should be less than 30%.

    If the rise and fall time and overshoot and ringing are not as indicated, go to the Pulse Amplitude Control Adjustment in Section 5 and perform the indicated adjustments. If the adjustments cannot be made, or if they do not correct the problem, proceed with ☑8 YTM Pulse Check, Step 26.

**Shunt Pulse Check. ☑1**

14. Connect test equipment as shown in Figure 8-53.
15. Set the pulse generator for 1 pulse per microsecond (1 MHz PRF) and a pulse width of 200 ns.
16. Connect channel 1 of the oscilloscope to A1A4TP3 and Channel 2 to A1A4TP2. Set Channel 1 display at top of screen. Set oscillo-

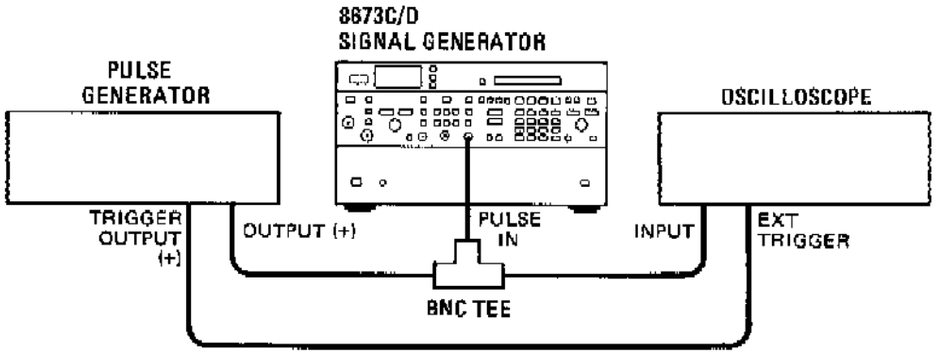


**Figure 8-53. Pulse Modulation Check Setup**



www.valuetronics.com

## SERVICE SHEET BD7 (cont'd)

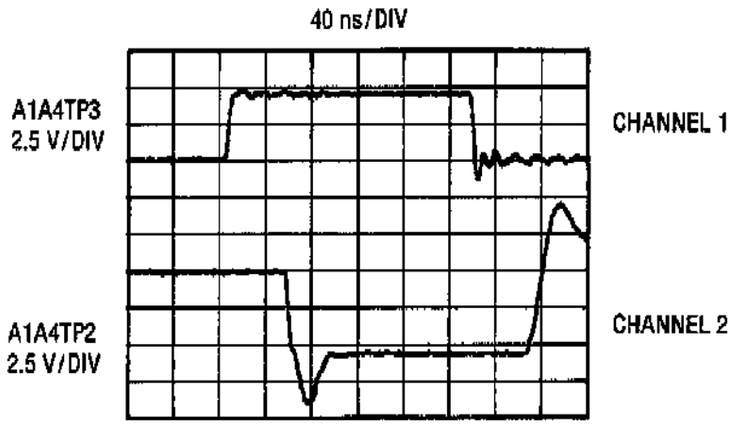


**Figure 8-54. Pulse Driver Board Output and Shunt Pulses**

scope controls as shown in Figure 8-54 and compare the display to the figure.

If both channels are incorrect or absent entirely, the problem is most likely in the input control section of A1A4. Go to Step 17 to check input.

If Channel 1 (TP3) is ok but channel 2 (TP2) is not correct, the problem is in the Shunt Pulse Delay and driver section of A1A4. Go to Service Sheet 15 to further isolate the problem.

If both channels are correct, go to Step 20, Series Pulse Check.

17. Connect the oscilloscope to A1A4TP7. Oscilloscope should show a 200 ns pulse width and PRF of 1 MHz.

    If the display is correct, proceed with Step 18. If the display is not correct, the problem is A5A13A1 or the cables between A5A13 and A1A4. Go to Service Sheet 37 to isolate the problem.

18. Remove A1A4 and replace it on a 36 pin extender board.

19. Connect the DVM to XA4-26 (TPB). The DVM should show a TTL logic high.

    If the DVM indication is not correct, there is a problem with the logic latch or associated circuitry on the DAC and Enable Board. Go to Service Sheet 22 to isolate the problem.

    If the indication is correct, there is a problem in the input control or addressable data latch on the pulse driver board. Go to Service Sheet 15 to isolate the problem.

**Series Pulse Checks.** (✓2)

20. Connect Channel 1 of the oscilloscope to A1A4TP3 and Channel 2 of the oscilloscope to A1A4TP1. Adjust the oscilloscope as shown in Figure 8-55 then compare the oscilloscope display to the figure.

    If the oscilloscope display is not as shown in the figure, there is a problem in the Series Pulse Delay and one shot circuit. Go to Service Sheet 15 to isolate the problem.

    If the oscilloscope display is as shown in the Figure, proceed with Step 21, Bias Tee/Pulse Modulator Check (✓3)

**Bias Tee/Pulse Modulator Check.** (✓3)

21. Set Both LINE switches to OFF then remove the bias tee A1CP1 (see Figure 8-56). Using the DVM, measure the resistance between:

| Port | Resistance |
|---|---|
| Output port and TEE | 0.1 ±0.05 ohms |
| Input port and TEE | open |
| Input port and output port | open |

    If the resistances are not as shown above, the bias tee is defective and should be replaced.

    If the resistances are as shown above, pulse modulator A1AT3 is defective and should be replaced.



www.valuetronics.com

## SERVICE SHEET BD7 (cont'd)

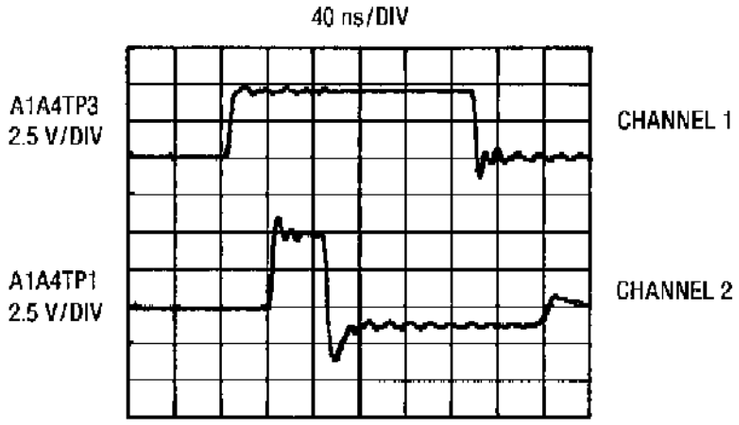


**Figure 8-55. Pulse Driver Board Input and Series Pulses**

**Sample Gate Checks.** (4)
If the pulse level accuracy is OK with a 300 ns pulse but fails with a 100 ns pulse, adjustment of the leading and trailing edge (L.E. and T.E.) one shots may be all that is necessary. Proceed to the ALC Sample Pulse Adjustment procedure in Section V. If this adjustment does not correct the problem, proceed with Step 22.

If the pulse level accuracy is out of spec with a 300 ns pulse, either the Sample Pulse circuitry is defective or the Sample and hold circuitry on the ALC board is defective. Proceed with Step 22 below.

22. Connect channel 1 of the oscilloscope to A1A4TP3 and Channel 2 to A1A4TP14. Adjust the oscilloscope as shown in Figure 8-57 and compare the oscilloscope display to the figure.

    If the oscilloscope display is not like the figure, the Sample Gate circuitry is defective. Go to Service Sheet 15 to isolate the problem.

    If the oscilloscope display is like the figure, the fault is probably in the Sample and Hold circuitry of the ALC Board. Go to Service Sheet 14 to isolate the problem.

**Level Check.** (5)
This check is to see if the minimum Pulse Width Detector of A1A4 is working normally.

23. Set the pulse generator for a pulse width of 300 ns.

24. Connect the DVM to A1A4TP5.

    The DVM should indicate a TTL logic high (>3V).

    If the DVM indication is not correct, the minimum Pulse Width Detector is defective. Go to Service Sheet 15 to isolate the problem. If the DVM indication is correct, proceed with Step 25.

25. Gradually reduce the pulse width to 50 ns while observing the DVM display.

    The DVM display should suddenly drop to 0 volts after the pulse width is reduced to 100 ns but before it reaches 50 ns.

    If the indication is not normal, go to the Minimum Pulse Width Indicator Adjustment in Section V. If the adjustment does not correct the problem go to Service Sheet 15 to isolate the problem.

    If the indication is normal, the minimum pulse width detector is working normally.

### High Bands Checks

Pulse modulation in the high bands (above 6.6 GHz) requires that a YTM pulse be injected into the YTM to compensate for bias lost when the pulse is off. Without a properly adjusted YTM pulse, the pulse modulation specification cannot be met.

It is assumed that pulse modulation in the high bands does not meet the rise time, fall time and/or overshoot and ringing specs, and that an attempt has been made to correct this fault by performing the Pulse Amplitude Control adjustments in Section 5. This step is absolutely critical and cannot be bypassed.



www.valuetronics.com

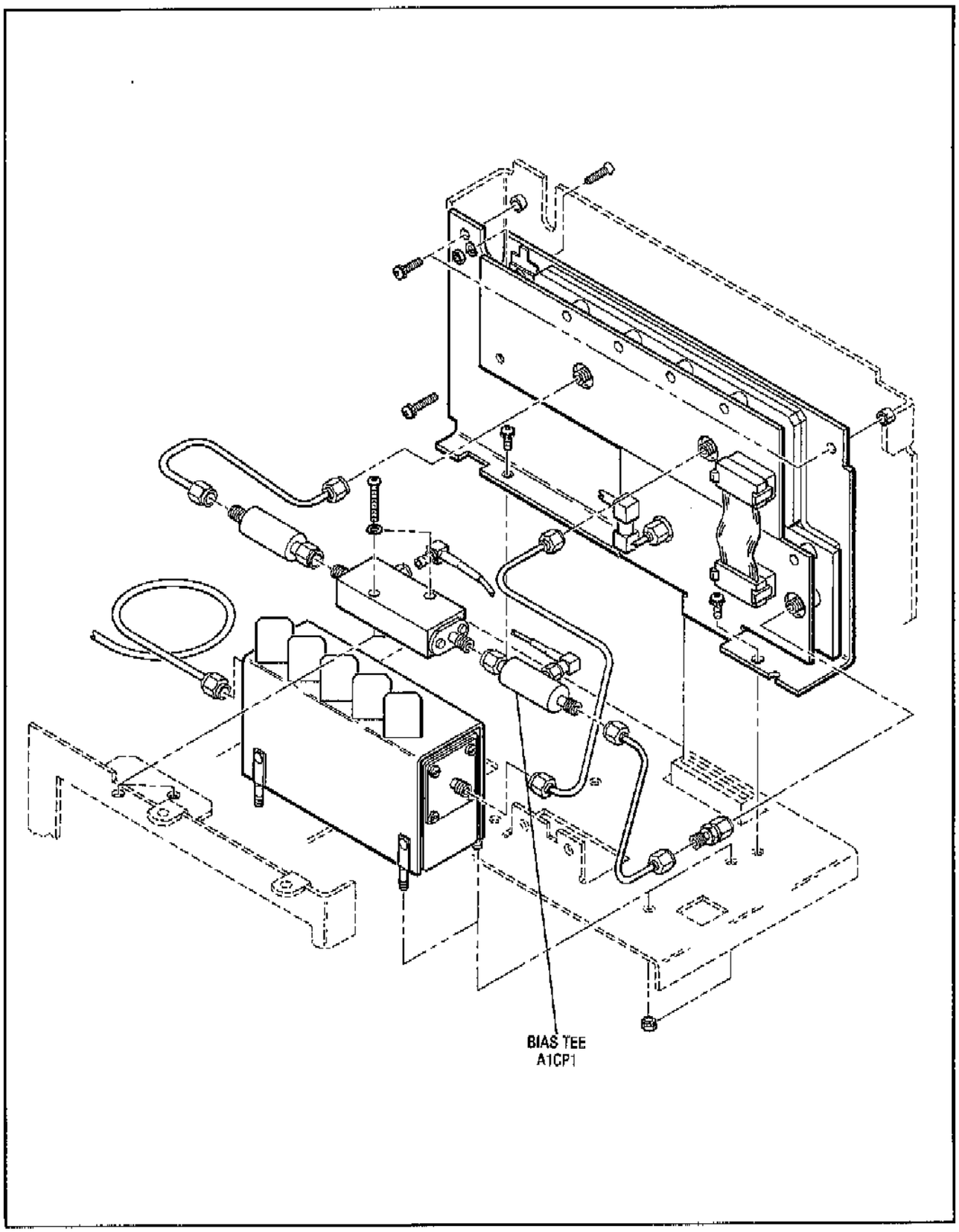


Figure 8-56. Bias Tee



www.valuetronics.com

## SERVICE SHEET BD7 (cont'd)

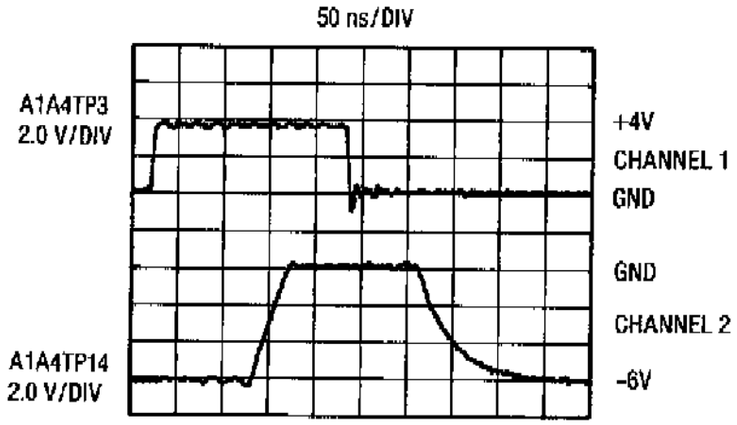


**Figure 8-57. Pulse Drive Board Input Pulse and Sample Pulse**

### High Bands Checks (cont'd)

The following procedures check the circuits that control the YTM pulse in order to isolate the fault to a service sheet.

#### YTM Pulse Check. (6)

26. Remove SRD Bias Board A1A8 and replace it with a 36 pin extender board (do not install A1A8 on the extender board).

27. Set the variable power supply voltage to 0 volts, then connect the positive output to XA8-16 and ground to XA8-1 or XA8-19.

28. Set the pulse generator for a 300 ns pulse and the Signal Generator to 10 GHz.

29. Connect the oscilloscope to A1A4TP10 (YTM PUL).

30. While observing the oscilloscope display, gradually increase the power supply voltage (maximum +10V).

    The peak amplitude of the YTM pulse on the oscilloscope display should be equal to the power supply output voltage at all levels.

    If the YTM pulse peak level does not track the power supply voltage, or is absent altogether, the YTM Pulse one shot is defective. Go to Service Sheet 15 to isolate the problem. If the YTM pulse peak level does track the power supply voltage, proceed with Step 31.

#### PAC DAC Check. (7)

31. Remove A1A5 and replace it on a 44 pin extender board.

32. Set both channels of the oscilloscope for 0.5 volt per division and DC input.

33. Connect channel 1 of the oscilloscope to A1A5 U7-3 (TPA) and Channel 2 to A1A5TP2.

34. Set the Signal Generator to 6.7 GHz and FREQ INCR to 100 MHz and gradually increase the frequency to 12 GHz while observing the oscilloscope display.

    The Channel 1 and Channel 2 displays should track each other up the display as the frequency is increased.

    If the two signals do not track, there is a problem with the Pulse Amplitude Control (PAC) DAC or the comparator on DAC and Enable Board A1A5. Go to Service Sheet 22 to isolate the problem.

    If the two signals track, proceed with Step 35.

#### PAC Check (8)

35. Install A1A8 on the extender board installed in Step 26, and set the following potentiometers to their maximum CW setting:
    A1A8R10 (B2 SL)
    A1A8R11 (B3 SL)
    A1A8R12 (B4 SL)
    A1A8R13 (B2 OF)
    A1A8R14 (B3 OF)
    A1A8R15 (B4 OF)



www.valuetronics.com

## SERVICE SHEET BD7 (cont'd)

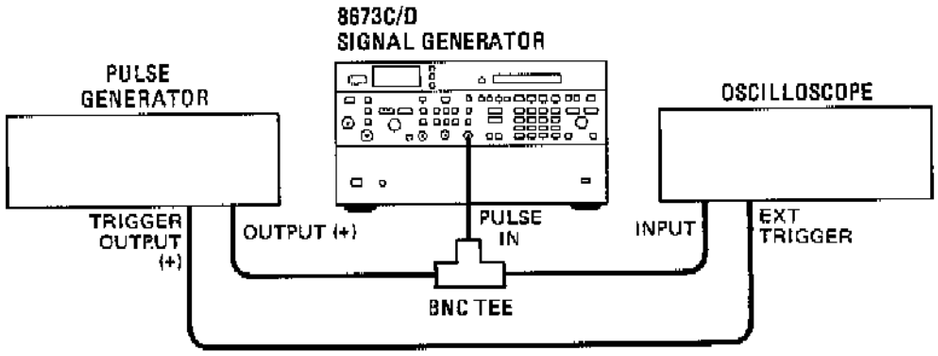


**Figure 8-58. A5 Pulse Modulation Check Setup**

### PAC Checks. (cont'd)

36. Connect the DVM to XA8-30 (TPC) and adjust the Signal Generator frequency to obtain the following voltages at XA8-30 (TPC) then check for the corresponding voltages at A1A8TP3.

| XA8-30 (TPC) Voltage | A1A8TP3 Voltage |
|---|---|
| 4 | 2 |
| 8 | 5 |
| 12 | 9 |

If any of the voltages at A1A8TP3 were incorrect, the Pulse Amplitude Control Circuit of A1A8 is defective, go to Service Sheet 19 to isolate the problem.

If the voltage at A1A8TP3 was correct, the YTM is defective and should be replaced.

### Low Band Checks

#### A5 Shunt Pulse Checks. (✓9)

37. Connect test equipment as shown in Figure 8-58.

38. Set the pulse generator for 1 pulse per microsecond (1 MHz PRF) and a pulse width of 200 ns.

39. Connect channel 1 of the oscilloscope to A5A4TP3 and Channel 2 to A5A4TP2. Set Channel 1 display at top of screen. Set the oscilloscope controls as shown in Figure 8-59 and compare the display to the figure.

    If both channels are incorrect or absent entirely, the problem is most likely in the input control section of A5A4. Go to Step 40 to check inputs.

    If Channel 1 (TP3) is OK but Channel 2 (TP2) is not correct, the problem is in the shunt pulse delay and driver section of A5A4. Go to Service Sheet 37 to further isolate the problem.

    If both channels are correct, go to Step 43, Series Pulse Check.

40. Connect the oscilloscope to A5A4TP7. Oscilloscope should show a 200 ns width and PRF of 1 MHz.

    If the display is correct, proceed with Step 41.

    If the display is not correct, the problem is on A5A13A1 (Service Sheet 37) or the cables between the front panel and A5A13 or between A5A13 and A5A4. Go to Service Sheet 37 to isolate the problem.

41. Remove A5A4 and replace it on a 36 pin extender board.

42. Connect the DVM to TPD (XA4-26). The DVM should show a TTL logic high.

    If the DVM indication is not correct, there is a problem with the logic latch or associated circuitry on the DAC and Enable Board. Go to Service Sheet 44 to isolate the problem.

    If the indication is correct, there is a problem in the input control or addressable data latch on the pulse driver board. Go to Service Sheet 37 to isolate the problem.

#### A5 Series Pulse Check. (✓10)

43. Connect Channel 1 of the oscilloscope to A5A4 TP3 and Channel 2 of the oscilloscope to A5A4TP1. Adjust the oscilloscope as shown in Figure 8-60 then compare the oscilloscope display to the figure.



www.valuetronics.com

## SERVICE SHEET BD7 (cont'd)

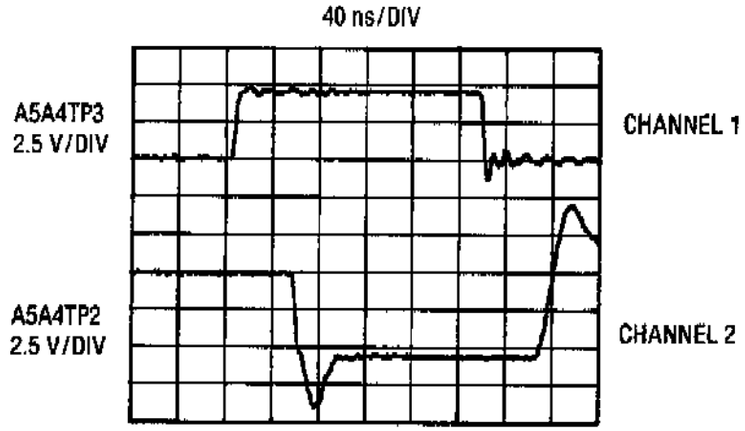


**Figure 8-59. Pulse Driver Board, Input and Shunt Pulses**

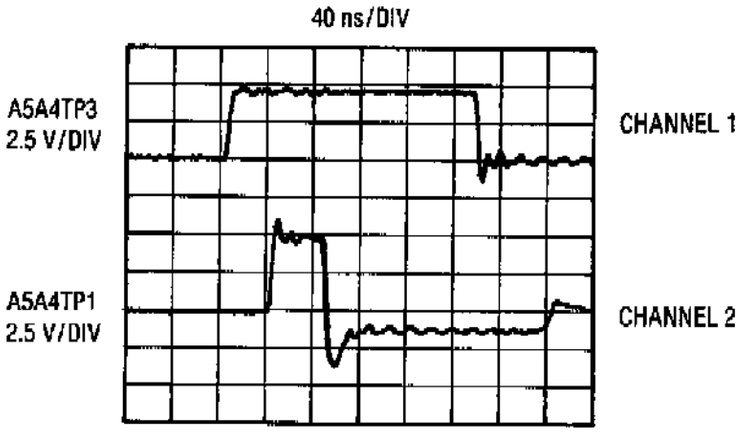


**Figure 8-60. Pulse Driver Board, Input and Series Pulses**

If the oscilloscope display is not as shown in the figure, there is a problem in the Series Pulse Delay and one shot circuit. Go to Service Sheet 37 to isolate the problem.

If the oscilloscope display is as shown in the Figure, proceed with Step 45 (A5 Bias Tee/ Pulse Modulator Check (✓11)).

**A5 Bias Tee/Pulse Modulator Check. (✓11)**

44. Set both LINE switches to OFF then remove the bias tee A1CP1 (See Figure 8-61). Using the DVM, measure the resistance between:

| Port | Resistance |
|---|---|
| OUTPUT PORT and TEE | 0.1 ± 0.05 ohms |
| INPUT PORT and TEE | open |
| INPUT PORT and OUTPUT PORT | open |

If the resistances are not as shown above, the bias tee is defective and should be replaced.

If the resistances are as shown above, pulse modulator A1AT3 is defective and should be replaced.

**A5 Sample Gate Check. (✓12)**

If the pulse level accuracy is OK with a 300 NS pulse but fails with a 100 ns pulse, adjustment of the leading and trailing edge (T.E. and L.E) one shots may be all that is necessary. Proceed to the ALC Sample Pulse Adjust procedure in Section V. If this adjustment does not correct the problem, proceed with Step 45 below.

If the pulse level accuracy is out of spec with a 300 ns pulse, either the Sample Pulse circuitry is defec-



www.valuetronics.com

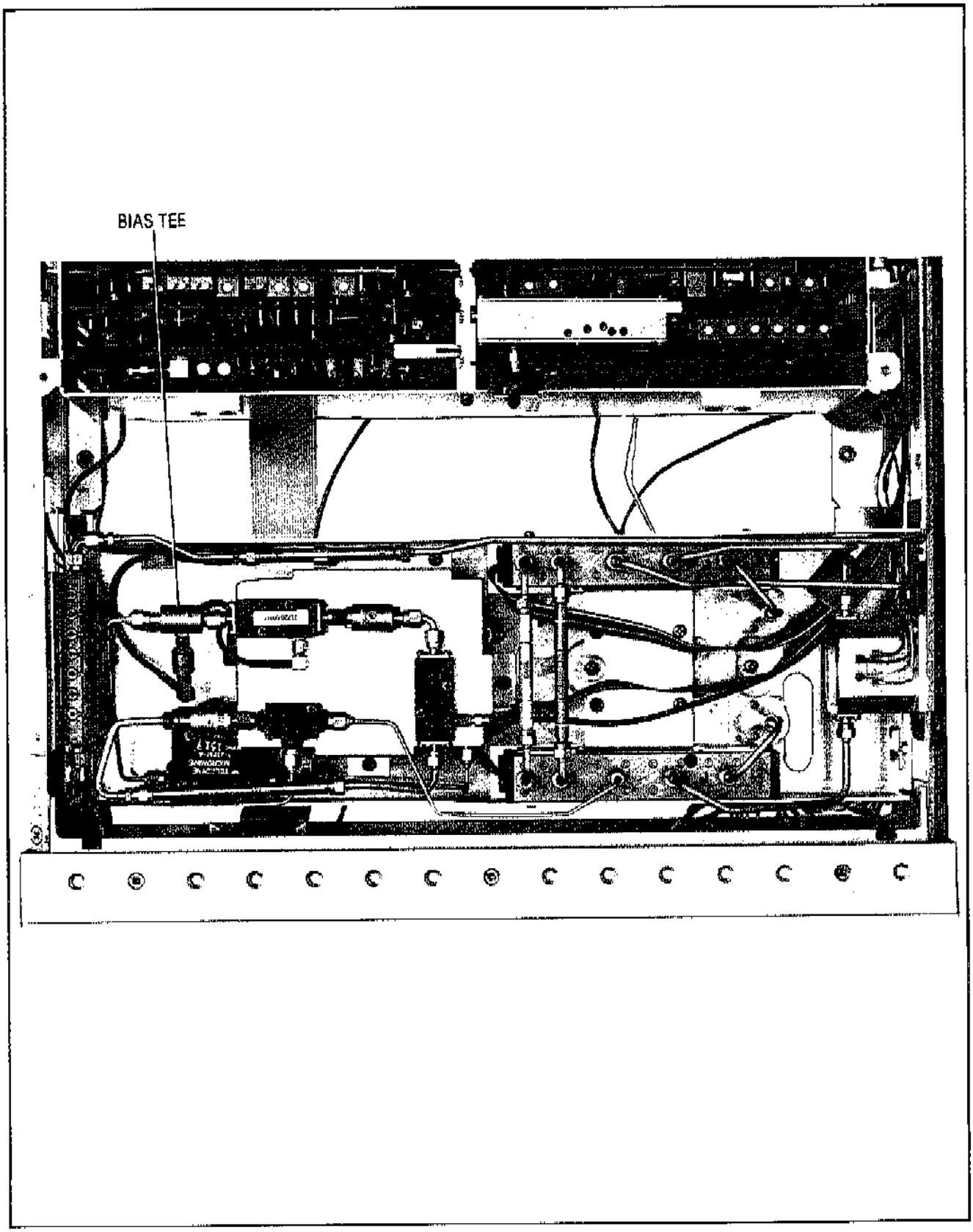


Figure 8-61. Bias Tee



www.valuetronics.com

**SERVICE SHEET BD7 (cont'd)**

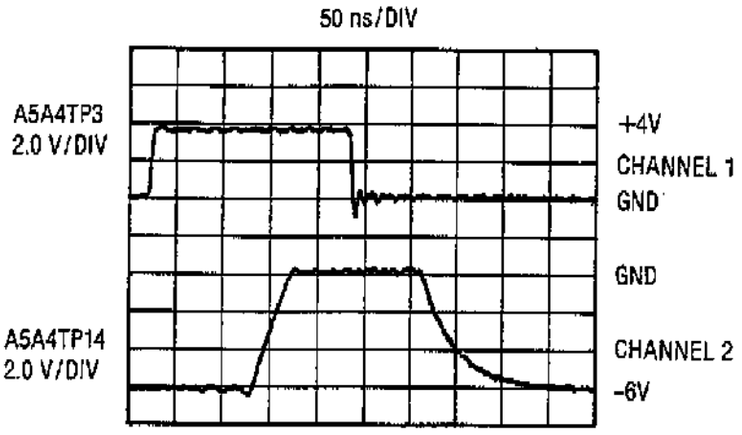


**Figure 8-62. Pulse Driver Board, Input Pulse and Sample Pulse**

### A5 Sample Gate Check (cont'd)

tive or the Sample and hold circuitry on the ALC board is defective. Proceed with Step 45 below.

45. Connect Channel 1 of the oscilloscope to A5A4TP3 and Channel 2 to A45A4TP14. Adjust the oscilloscope as shown in Figure 8-62 and compare the oscilloscope display to the figure.

    If the oscilloscope display is not like the figure, the Sample Gate circuitry is defective. Go to Service Sheet 37 to isolate the problem.

    If the oscilloscope display is like the figure, the fault is probably in the Sample and Hold circuitry of the ALC Board. Go to Service Sheet 36 to isolate the problem.

### A5 Level Check. ☑18

This check is to see if the minimum Pulse Width Detector of A5A4 is working normally.

46. Set the pulse generator for a pulse width of 300 ns.

47. Connect the DVM to A5A4TP5. The DVM should indicate a TTL logic high ☑9.

    If the DVM indication is not correct, the minimum Pulse Width Detector is defective. Go to Service Sheet 37 to isolate the problem.

    If the DVM indication is correct, proceed with Step 49.

48. Gradually reduce the pulse width to 50 ns while observing the DVM display.

    The DVM display should suddenly drop to 0 volts after the pulse width is reduced to 100 ns but before it reaches 50 ns.

    If the indication is not normal, go to the Minimum Pulse Width Indicator Adjustment. If the adjustment does not correct the problem go to Service Sheet 37 to troubleshoot.

    If the indication is normal, the minimum pulse width detector is working normally.



www.valuetronics.com

FIG. 8-63
SHT 1 of 4

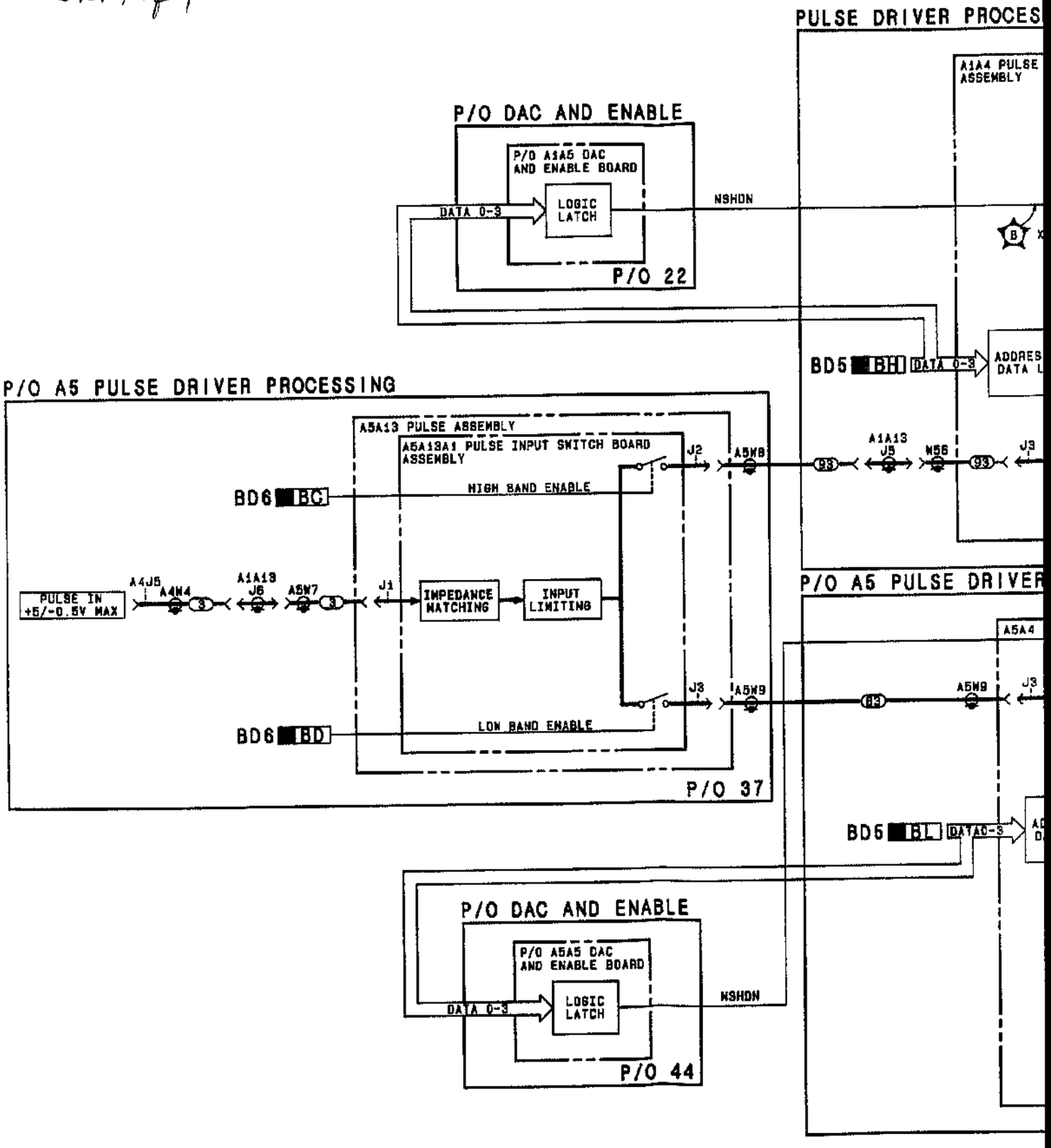


www.valuetronics.com

FIG. 8-63
Sht 2 of 4

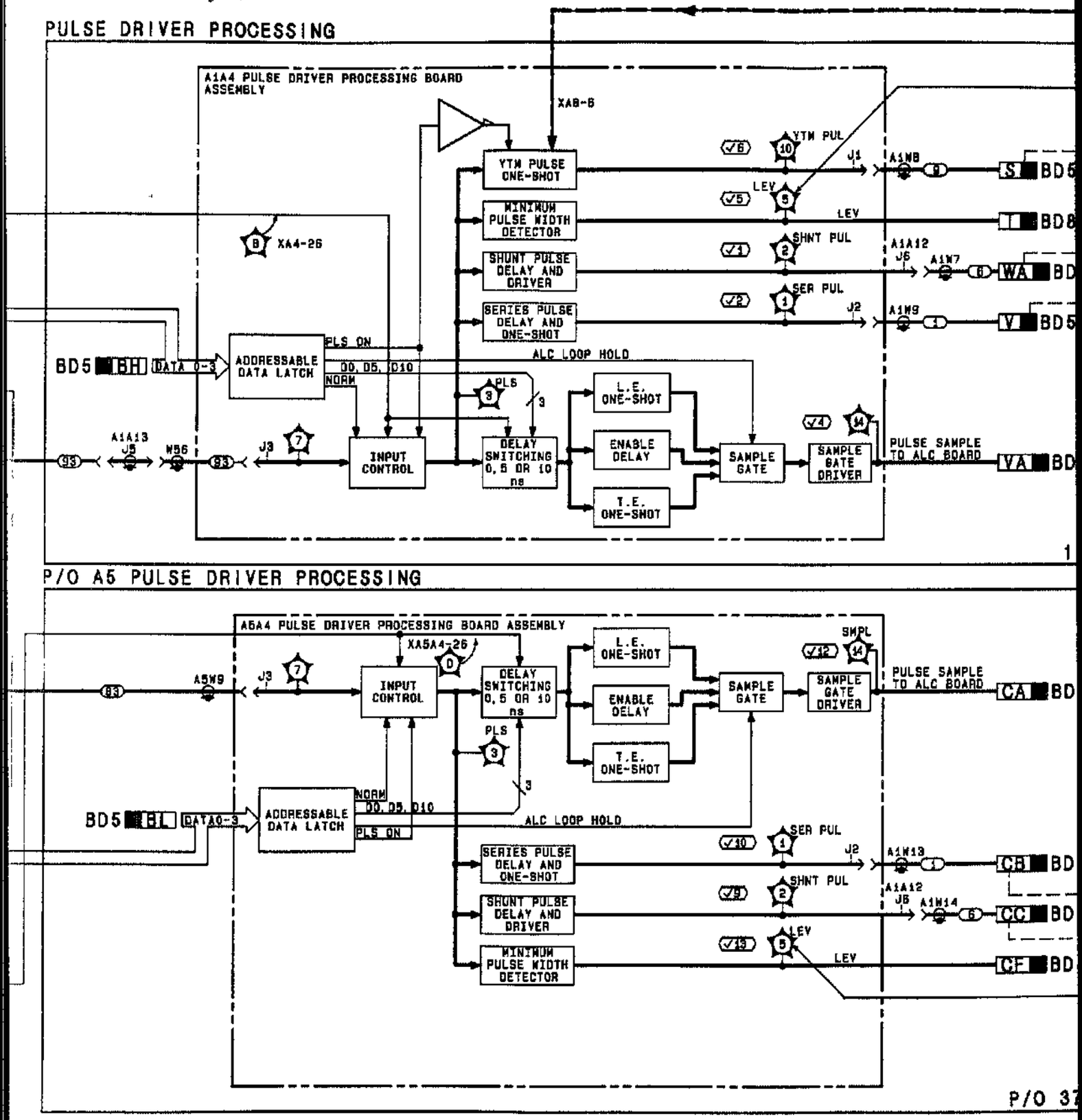


www.valuetronics.com

FIG. 8-63
SHT 3 of 4

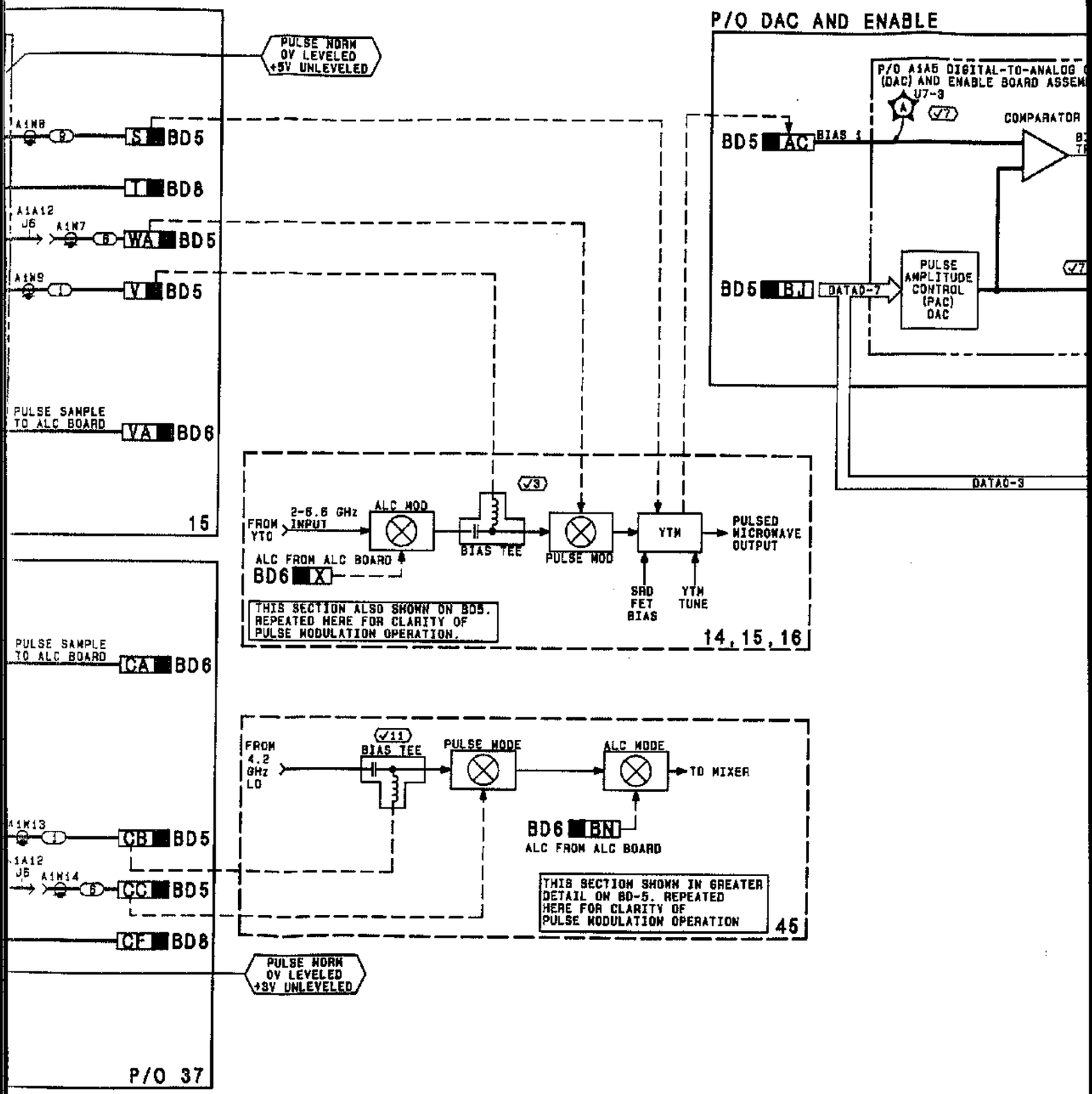


www.valuetronics.com

FIG. 8-63
Sht 4 of 4

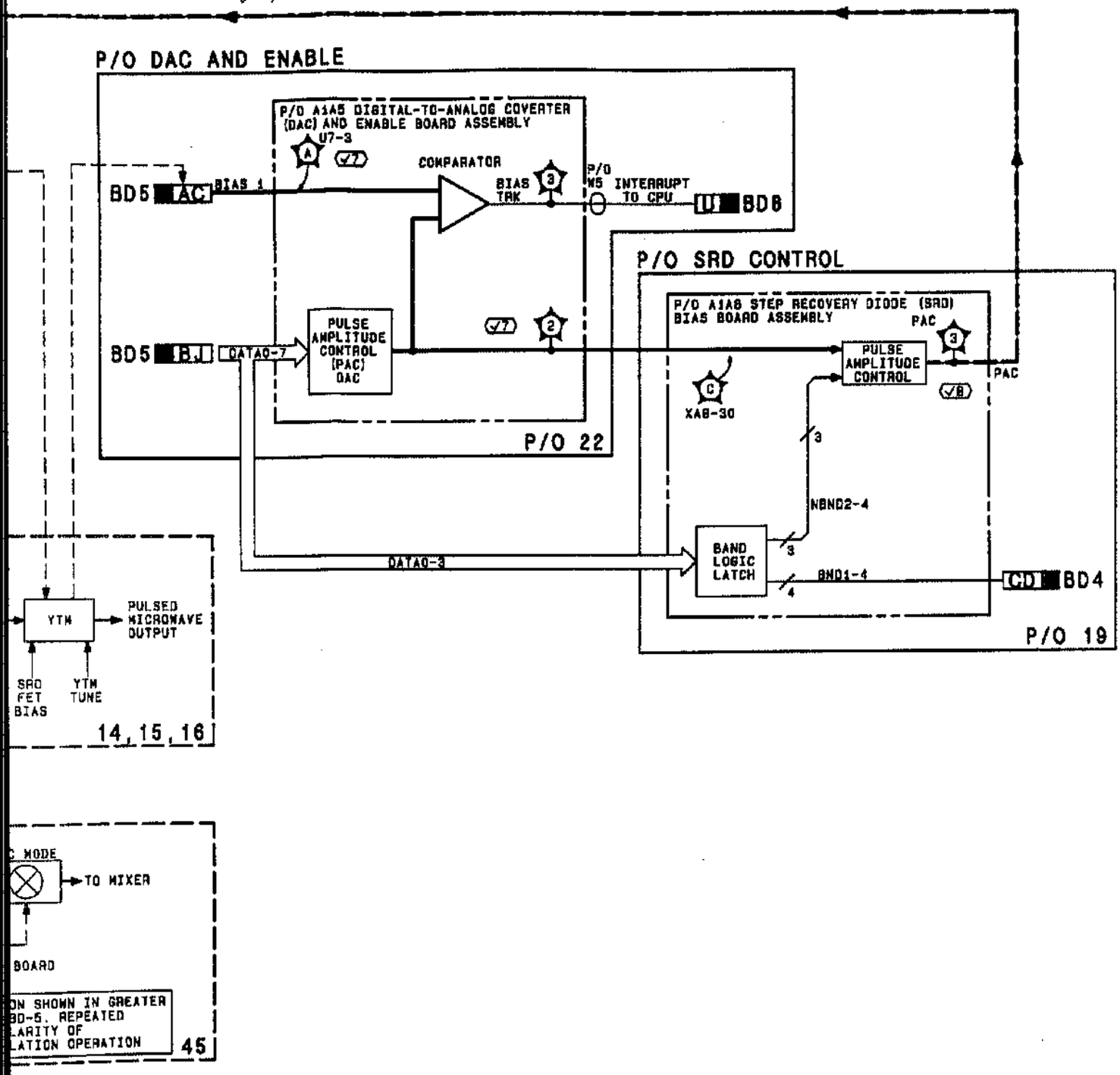


BD7

Figure 8-63. HP 8673C/D Pulse Modulation, Block Diagram



www.valuetronics.com

## SERVICE SHEET BD8

## DIGITAL CONTROL UNIT BLOCK DIAGRAM

### PRINCIPLES OF OPERATION

The Digital Control Unit consists of the following:

1. A Digital Controller consisting of a Microprocessor Assembly A2A8, a ROM/ Converter Assembly A2A11, a RAM Assembly A2A10 and an A5 Microprocessor Assembly A5A9.

2. A Control Section consisting of a Frequency Output/HP-IB Assembly A2A9, an Input/Output Assembly A2A7, a Key Code Assembly A2A2, a Panel Driver Assembly A2A1 and a Front Panel Assembly A4.

The function of the Digital Control Unit is to control the operation of the Signal Generator. The DCU responds to data inputs from the Signal Generator's front panel as well as data and instructions from the rear panel AUX connector and the HP-IB bus. The Controller communicates with the A3 RF Source Assembly, the A1 RF Output Assembly, the A4 Front Panel Assembly and the A5 Down Converter.

The Microprocessor Assembly continually executes programs stored in ROM (Read Only Memory) and uses the RAM (Random Access Memory) to store front panel information and intermediate data calculations. In order to preserve the information stored in RAM when power is removed from the instrument, a battery back up system is used to maintain power to the RAM.

The Microprocessor Assembly communicates with other assemblies via a bidirectional data bus, an address bus and various control lines. Information is sent and received on the data bus, the address bus controls where the information is coming from or being sent to and the control lines provide a means of controlling data flow and communication between the Microprocessor Assembly and other assemblies.

### DIGITAL CONTROLLER (A2A8,A2A10,A2A11,A5A9)

The Digital Controller is responsible for generating and processing data for the phase locked loops, ALC circuitry and pulse circuitry. The programs that enable the Controller to accomplish these functions are stored in Read Only Memory in the ROM/Converter Assembly. These programs are also called Firmware and are not lost when the ROM is not powered. The ROM/Converter Assembly also allows the Microprocessor Assembly to communicate with the A5A9 Microprocessor Assembly so that operation in the A5 Section of the instrument can be synchronized with the rest of the instrument.

The RAM Assembly A2A10 is used by the Microprocessor to store frequency values, front panel settings (including the data for the RCL 1-9 function), intermediate numerical values needed by the Microprocessor Assembly and return addresses when sub-routines are executed.

The A5A9 Microprocessor is used during operation in the low band (below 2 GHz). Control information from the A2A8 Microprocessor Assembly is relayed to the A5A9 Microprocessor Assembly via the ROM/Converter Assembly. The A5A9 Microprocessor Assembly processes this control information to control the operation of the A5 Down Converter.



www.valuetronics.com

## SERVICE SHEET BD8 (cont'd)

### Control Section (A2A9,A2A7,A2A2,A2A1,A4)

The Control Section is the interface between the Digital Controller and the instrument. The Control Section can be divided into two smaller assemblies:

1. An internal interface consisting of Frequency Output/HPIB A2A9 (only the frequency output portion) and Input/Output Assembly A2A7.

2. An external interface consisting of a Key Code Assembly A2A2, Panel Driver A2A1, Front Panel Assembly A4 and Frequency Output/HP-IB A2A9 (only the HPIB portion).

The internal interface actually controls the instrument operation. The Frequency Output/HPIB Assembly receives frequency data from the Digital Controller and generates the data needed by the YTO, M/N and LFS phase locked loops. This data is used differently by each phase locked loop. The data lines to the YTO phase locked loop are used to pretune the YTO frequency so that the YTO will not phase lock to the wrong frequency.

The data sent to the M/N phase locked loop is used to tune the M/N VCO to a specific frequency that will allow a harmonic of the M/N phase locked loop output to generate a 20-30 MHz difference frequency when mixed with the YTO phase locked loop output.

The data that go to the LFS phase locked loop are used to set the LFS phase locked loop to a frequency between 20 and 30 MHz with a resolution of 1 KHz.

The Input/Output Assembly A2A7 enables the Microprocessor Assembly to read the status of various circuits, output data to circuits and allows data to be read from the Key Code Assembly A2A2.

The external interface allows external inputs to be read by the Microprocessor Assembly. The external inputs can come from the HP-IB bus (in remote mode), the front panel keys or the AUX connector on the back panel of the instrument. The results of the entry are displayed on the Front Panel A4 display. The Microprocessor Assembly communicates directly with the Panel Driver Assembly A1A1 and the Front Panel A4 display to display the current control settings.

The Key Code Assembly A2A2 accepts inputs from the Front Panel A4 keys and encodes the information. When a key is pressed, a key down (KDN-L) signal is generated by the Key Code Assembly which tells the Digital Controller section of the DCU that a key has been pressed. The Microprocessor Assembly then reads the input from the Key Code Assembly via the Input/Output Assembly. When the data is read, an acknowledgement signal is sent to the Key Code Assembly that resets the circuit and allows another entry to be made. The Key Code Assembly also processes inputs from the AUX connector in the same manner as a front panel key input.



www.valuetronics.com

Inputs in remote mode are processed in the HP-IB portion of the Frequency Output/HPIB Assembly A2A9. The HPIB circuits contain eight registers (status registers) that can be read by the Digital Controller section of the DCU and eight registers (control registers) that the Digital Controller section can write data into. All communications with the HPIB bus are done via the HP-IB circuits on the Frequency Output/HPIB Assembly A2A9.

## TROUBLESHOOTING

### General

CAUTIONS

*MOS and CMOS ICs can be damaged by static charges and circuit transients. Do not remove any A2 Controller assembly from the Signal Generator while power is applied. Discharge the board and replacement IC to the same potential. (Use a conductive pad, HP part Number 4208-0094). When unplugging ICs, place the board on a conductive pad. When the IC is unplugged, insert it into the pad also.*

*The A2A7 I/O Assembly uses the +22 Vdc power supply which is not switched. Therefore, disconnect the power cord before removing or installing A2A7.*

*Several ICs in the A2 Controller Assembly are held in high-grip sockets. Both the socket and the IC can be damaged if an attempt is made to remove the IC with an IC extraction tool. The recommended procedure is to first ground the tip of a small blade-type screwdriver. Then slide the tip between the IC and the socket and slowly pry up the IC one set of pins at a time on alternate ends until the IC is loose.*

If the Signal Generator powers up correctly it is a strong indication that the DCU is operating correctly. In most cases, the two most common indications, of a Digital Control Unit failure are that the instrument fails to power up correctly or that the instrument behaves erratically. Erratic behavior is generally indicated by an unexpected front panel display or incorrect responses to valid keyboard entries.

In addition, keep the following points in mind when troubleshooting the Digital Control Unit:

1. The edge connectors of all assemblies must be clean and properly seated in the motherboard connectors.

2. The proper operation of the clock circuits for the Digital Control Unit is critical.

3. The Digital Control Unit operation depends on a long sequence of instructions and events. Even a single bit of information that



www.valuetronics.com

is incorrect can change an entire sequence.

4. Data on the buses is often unstable or meaningless because of multiplexing or switching transients. A signature analyzer can determine when the data is valid but other test instruments such as a logic probe or an oscilloscope cannot differentiate between stable data and transients. These other instruments, however, can still be used to examine qualitative factors such as general bus activity, logic levels, waveform timing and bus conflicts.

5. The bus structure makes it possible to connect many devices to the same node. Finding a single bad device on a multi-device node can be extremely difficult.

### Equipment

Oscilloscope .....HP 1740A
Signal Generator.....HP 8640B

### Troubleshooting Procedure

To facilitate troubleshooting the Digital Control Unit, each type of failure has a specific troubleshooting procedure associated with it. The types of failures are categorized as:

1. Power-up Failures

2. Front Panel Display, Annunciator and Switch Failures

3. Data Problems for Internal Circuitry

4. Data Failures Associated with A5 Down Converter Operation in the Low Band.

### Power-Up Failures

When the instrument is first turned on, a series of tests are performed to check internal operation. If any of these self-diagnostic tests find a failure, a message will be displayed and can be observed by pressing the front panel MESSAGE key. Table 8-18 lists the error message numbers and the procedure to be followed to locate the source of the failure.

### Front Panel Display, Annunciator and Switch Failures

A simplified block diagram of the front panel keys and display circuitry is shown in Figure 8-64. Faults in the front panel keys or Key Code circuitry can be isolated using the keyboard status indicators on the Key Code Assembly A2A2 and the front panel keys.

Press the function keys listed in the table below and verify that the pattern of lighted keyboard status indicators on the Key Code Board are as indicated. If the pattern does not change or changes only once, check KDN-L and KACK-L signals on the Key Code Assembly.

If a pattern is incorrect, press the alternate keys to isolate the problem to a row or column fault.



www.valuetronics.com

Table 8-18. Power-Up Tests and Error Messages

| Error Message Number | Test | Fault Location Procedure |
|---|---|---|
| 90 | AUTO PEAK MALFUNCTION | Refer to Service Sheet 20 |
| 92 | RECALL CHECKSUM ERROR | Repeat the STORE and RECALL that caused the error. If error persists, perform RAM Verification (A2A10). |
| 95 | LOSS OF DATA ON POWER UP | Reapply power. If trouble persists, check battery and replace if necessary. Re-enter data and restart. |
| 96 | MEMORY TEST FAILURE | Reapply power. If trouble persists, perform RAM Verification (A2A10) and, if necessary, ROM Diagnostic (A2A11) and ROM Assembly Check (A2A11). |
| 97 | ROM TEST FAILURE | Reapply power. If trouble persists, perform ROM tests |
| 98 | RAM TEST FAILURE | Same as 92 above. |
| 99 | RAM NOT FUNCTIONAL AT POWER UP. | Same as for 98 above. |



www.valuetronics.com

## SERVICE SHEET BD8 (cont'd)

Table 8-19. Key Code Patterns

| Function Key | Key-Code Pattern | | | | | | | Input Pair Verified | | IF Key-Code Pattern Incorrect | |
|---|---|---|---|---|---|---|---|---|---|---|---|
| | K6 | K5 | K4 | K3 | K2 | K1 | K0 | Row | Column | Key to be Depressed to Verify Row | Key to be Depressed to Verify Column |
| 1 | | L | L | | | | L | KR1 | C3L | 9 | 2 |
| ΔF | | L | L | L | | L | | KR2 | C3H | 2 | 9 |
| TUNE | L | | | | L | | | KR3 | C4L | 3 | LOCAL |
| ALC INT | L | | | L | | | | KR0 | C4H | 0 | RF ON/OFF |
| FREQ DECR | L | | L | | L | | | KR4 | C5L | 4 | START |
| PULSE OFF | L | | L | L | L | | L | KR5 | C5H | 5 | FM3 |
| FM3 | L | L | | | L | L | | KR6 | C66 | 6 | FM1 |
| SERVICE FUNC. | L | L | | L | L | L | L | KR7 | C6H | 7 | SINGLE |

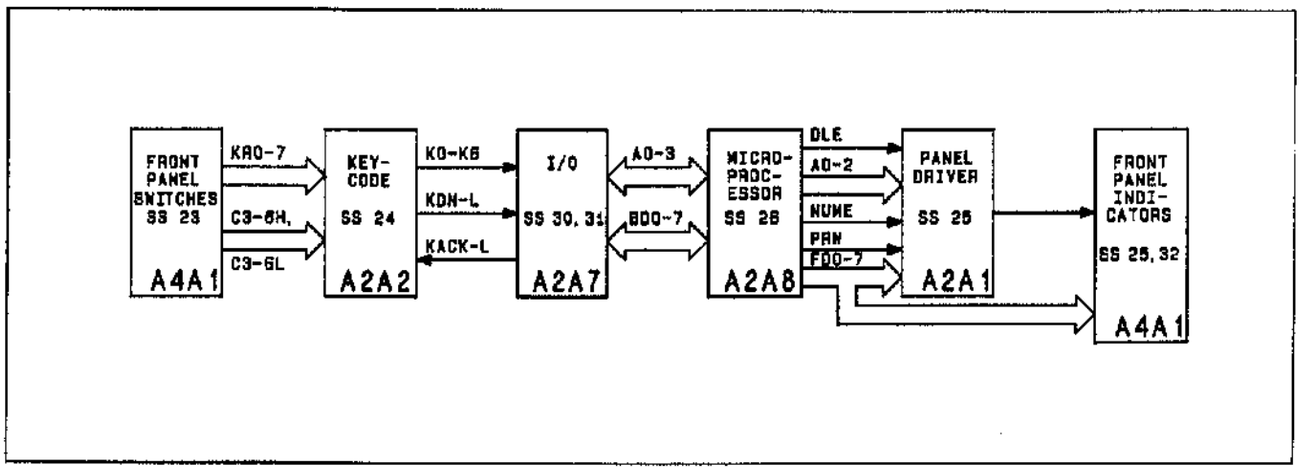


Figure 8-64. Front Panel Keyboard and Indicator Block Diagram

### Front Panel Display, Annunciator and Switch Failures (cont'd)

Table 8-20 shows the required signal conditions between circuit elements for proper operation of the instrument. Examination of Table 8-20 reveals that functioning of circuitry and interconnects can be verified by depressing alternate keys which use the same circuitry and/or interconnects as the one under investigation. As an example, suppose the Auto key is depressed and the corresponding front panel LED is not lit and the function not performed. Depress any key but the numeral keys to verify the enable signals DLE and PRW from the microprocessor to the Panel Driver. Depress the Manual key to verify the address bit A2. By depressing the RF ON/OFF key, the data bit FD4 can be verified. No failures found when the alternate keys are depressed, indicates the fault of the AUTO function to be located on the Front Panel Circuit Card. A failure, if found when the alternate keys are depressed, is then located to be between the Key Code Circuit Card output and the Front Panel Card. By performing the Front Panel Display and Driver Diagnostic, a fault condition between the output of the Microprocessor and A2A8 and the Front Panel may be determined. Faults which occur between the output of the Key-Code Circuit Card and the output of the Micropro-



www.valuetronics.com

Table 8-20
Sht 1 of 2

**SERVICE SHEET 8 (cont'd)**

**Table 8-20. Signal Conditions for Front Panel Keyboard to Front Panel Indicator**

| Function | Front Panel Output | | | | | | | | | | | | | | Key-Code Output | | | | | | | |
|---|---|---|---|---|---|---|---|---|---|---|---|---|---|---|---|---|---|---|---|---|---|---|
| | KR0 | KR1 | KR2 | KR3 | KR4 | KR5 | KR6 | KR7 | C3L | C3H | C4L | C4H | C5L | C5H | C6L | C6H | K6 | K5 | K4 | K3 | K2 | K1 | K0 | NUME |
| 0 | L | | | | | | | | | L | | | | | | | | L | L | | | | | |
| 1 | | L | | | | | | | | L | | | | | | | | L | L | | | | L | |
| 2 | | | L | | | | | | | L | | | | | | | | L | L | | | L | | |
| 3 | | | | L | | | | | | L | | | | | | | | L | L | | | L | L | |
| 4 | | | | | L | | | | | L | | | | | | | | L | L | | L | | | |
| 5 | | | | | | L | | | | L | | | | | | | | L | L | | L | | L | |
| 6 | | | | | | | L | | | L | | | | | | | | L | L | | L | L | | |
| 7 | | | | | | | | L | | L | | | | | | | | L | L | | L | L | L | |
| 8 | L | | | | | | | | | L | | | | | | | | L | L | L | | | | |
| 9 | | L | | | | | | | | L | | | | | | | | L | L | L | | | L | |
| ΔF | | | L | | | | | | | L | | | | | | | | L | L | L | | L | | |
| AUTO | | | | L | | | | | | L | | | | | | | | L | L | L | | L | L | |
| MKR | | | | | L | | | | | L | | | | | | | | L | L | L | L | | | |
| SWEEP OFF | | | | | | L | | | | L | | | | | | | | L | L | L | L | | L | |
| MANUAL | | | | | | | L | | | L | | | | | | | | L | L | L | L | L | | H |
| UNUSED | | | | | | | | L | | L | | | | | | | | L | L | L | L | L | L | |
| LOCAL | L | | | | | | | | | | L | | | | | | L | | | | | | | |
| DWELL | | L | | | | | | | | | L | | | | | | L | | | | | | L | |
| FREQ INCR DW | | | L | | | | | | | | L | | | | | | L | | | | L | | | |
| FREQ INCR UP | | | | L | | | | | | | L | | | | | | L | | | | L | L | | |
| TUNE ON/OFF | | | | | L | | | | | | L | | | | | | L | | | L | | | | |
| STEPS | | | | | | L | | | | | L | | | | | | L | | | L | | | L | |
| ← | | | | | | | L | | | | L | | | | | | L | | | L | L | | | |
| . | | | | | | | | L | | | L | | | | | | L | | | L | L | L | | |
| ALC INT | L | | | | | | | | | | | L | | | | | L | | L | | | | | |
| RF ON/OFF | | L | | | | | | | | | | L | | | | | L | | L | | | | L | |
| UNUSED | | | L | | | | | | | | | L | | | | | L | | L | | L | | | |
| RANGE | | | | L | | | | | | | | L | | | | | L | | L | | L | L | | |
| DIODE | | | | | L | | | | | | | L | | | | | L | | L | L | | | | |
| PWR METER | | | | | | L | | | | | | L | | | | | L | | L | L | | | L | |
| RANGE | | | | | | | L | | | | | L | | | | | L | | L | L | L | | | |
| AUTO PK | | | | | | | | L | | | | L | | | | | L | | L | L | L | L | | |
| START | L | | | | | | | | | | | | L | | | | L | | L | | | | | |
| STOP | | L | | | | | | | | | | | L | | | | L | | L | | | | L | |
| NORM | | | L | | | | | | | | | | L | | | | L | | L | | L | | | |
| FREQUENCY | | | | L | | | | | | | | | L | | | | L | | L | | L | L | | |

www.valuetronics.com

Table 8-20
Sht 2 of 2

-20. Signal Conditions for Front Panel Keyboard to Front Panel Indicators Operation (1 of 2)

| Output | | | | | | | | Key-Code Output | | | | | | | μP Output to Panel Driver | | | | | | | | | | Panel Driver Output |
|---|---|---|---|---|---|---|---|---|---|---|---|---|---|---|---|---|---|---|---|---|---|---|---|---|---|
| C3L | C3H | C4L | C4H | C5L | C5H | C6L | C6H | K6 | K5 | K4 | K3 | K2 | K2 | K0 | NUME | DLE | PRW | A0 | A1 | A2 | FD0 | FD1 | FD2 | FD3 | FD4 | FD5 | FD6 | FD7 | |
| L | | | | | | | | | L | L | | | | | | | | | | | | | | | | | | | |
| L | | | | | | | | | L | L | | | | L | | | | | | | | | | | | | | | |
| L | | | | | | | | | L | L | | | L | | | | | | | | | | | | | | | | |
| L | | | | | | | | | L | L | | | L | L | | | | | | | | | | | | | | | |
| L | | | | | | | | | L | L | | L | | | | | | | | | | | | | | | | | |
| L | | | | | | | | | L | L | | L | | L | | | | | | | | | | | | | | | |
| L | | | | | | | | | L | L | | L | L | | | | | | | | | | | | | | | | |
| L | | | | | | | | | L | L | | L | L | L | | | | | | | | | | | | | | | |
| | L | | | | | | | L | L | L | | | | | | | | | | | | | | | | | | | |
| | L | | | | | | | | L | L | | | | L | | | | | | | | | | | | | | | |
| | L | | | | | | | | L | L | | | L | | | | | | | | | | | | | | | | |
| | L | | | | | | | | L | L | | | L | L | | H | L | | | L | | | | | | | | | |
| | L | | | | | | | | L | L | | L | | | | | | | | | | | | | | | | | |
| | L | | | | | | | | L | L | | L | | L | | | | | | | | | | | | | | | |
| | L | | | | | | | | L | L | | L | L | | H | L | | | L | | | | | | | | | | |
| | L | | | | | | | | L | L | | L | L | L | | | | | | | | | | | | | | | |
| | | L | | | | | | L | | | | | | | | | | | | | | | | | | | | | |
| | | L | | | | | | | L | | | | | L | | | | | | | | | | | | | | | |
| | | L | | | | | | | L | | | | L | | | | | | | | | | | | | | | | |
| | | L | | | | | | | L | | | | L | L | | | L | | | L | | | | | | | | | |
| | | L | | | | | | | L | | | L | | | | | | | | | | | | | | | | | |
| | | L | | | | | | | L | | | L | | L | | | | | | | | | | | | | | | |
| | | L | | | | | | | L | | | L | L | | | L | | | L | | | | | | | | | | |
| | | L | | | | | | | L | | | L | L | L | | | | | | | | | | | | | | | |
| | | | L | | | | | L | | L | | | | | | | | | | | | | | | | | | | |
| | | | L | | | | | | L | L | | | | L | | | | | | | | | | | | | | | |
| | | | L | | | | | | L | L | | | L | | | | | | | | | | | | | | | | |
| | | | L | | | | | | L | L | | | L | L | | | L | | | L | | | | | | | | | |
| | | | L | | | | | | L | L | | L | | | | | | | | | | | | | | | | | |
| | | | L | | | | | | L | L | | L | | L | | | | | | | | | | | | | | | |
| | | | L | | | | | | L | L | | L | L | | | L | | | L | | | | | | | | | |
| | | | L | | | | | | L | L | | L | L | L | | | | | | | | | | | | | | | |
| | | | | L | | | | L | | | | | | | | | | | | | | | | | | | | | |
| | | | | L | | | | | L | | | | | L | | | | | | | | | | | | | | | |
| | | | | L | | | | | L | | | | L | | | | | | | | | | | | | | | | |
| | | | | L | | | | | L | | | | L | L | | | L | | | L | | | | | | | | | |
| | | | | L | | | | | L | | | L | | | | | | | | | | | | | | | | | |
| | | | | L | | | | | L | | | L | | L | | | | | | | | | | | | | | | |
| | | | | L | | | | | L | | | L | L | | | L | | | L | | | | | | | | | |
| | | | | L | | | | | L | | | L | L | L | | | | | | | | | | | | | | | |
| | | | | | L | | | L | L | | L | | | | | | | | | | | | | | | | | | |
| | | | | | L | | | | L | L | | | | L | | | | | | | | | | | | | | | |
| | | | | | L | | | | L | L | | | L | | | | | | | | | | | | | | | | |
| | | | | | L | | | | L | L | | | L | L | | | L | | | L | | | | | | | | | |
| | | | | | | | | | | | | | | | | | | | | | | | | | | | | | |

8-83a

www.valuetronics.com

Table 8-20A.
Sht 1 of 2

Table 8-20. Signal Conditions for Front Panel Keyboard to Front Panel Indicators Opera

| Function | Front Panel Output | | | | | | | | | | | | | | Key-Code Output | | | | | | | NUME | DLE | PR |
|---|---|---|---|---|---|---|---|---|---|---|---|---|---|---|---|---|---|---|---|---|---|---|---|---|
| | KR0 | KR1 | KR2 | KR3 | KR4 | KR5 | KR6 | KR7 | C3L | C3H | C4L | C4H | C5L | C5H | C6L | C6H | K6 | K5 | K4 | K3 | K2 | K2 | K0 | | | |
| FREQ INCR | | | | | L | | | | | | | | L | | | | L | | L | | L | | | | | |
| COMPL | | | | | | L | | | | | | | L | | | | L | | L | | L | | L | | | |
| STD | | | | | | | L | | | | | | L | | | | L | | L | | L | L | | | | |
| RCL | | | | | | | | L | | | | | L | | | | L | | L | | L | L | L | | | |
| AM OFF | L | | | | | | | | | | | | | L | | | L | | L | L | | | | | | |
| MTR AM | | L | | | | | | | | | | | | L | | | L | | L | L | | | L | | | |
| MTR FM | | | L | | | | | | | | | | | L | | | L | | L | L | | L | | | | |
| FM OFF | | | | L | | | | | | | | | | L | | | L | | L | L | | L | L | | | |
| MESSAGE KEY | | | | | L | | | | | | | | | L | | | L | | L | L | L | | | | | |
| PULSE OFF | | | | | | L | | | | | | | | L | | | L | | L | L | L | | L | | | |
| UNUSED | | | | | | | L | | | | | | | L | | | L | | L | L | L | L | | | | |
| MTR L V L | | | | | | | | L | | | | | | L | | | L | | L | L | L | L | L | | | |
| FM .3 | L | | | | | | | | | | | | | | L | | | L | L | | | | | | | |
| FM .1 | | L | | | | | | | | | | | | | L | | | L | L | | | | L | | | |
| FM .03 | | | L | | | | | | | | | | | | L | | | L | L | | | L | | | | |
| AM 30% | | | | L | | | | | | | | | | | L | | | L | L | | | L | L | | | |
| AM 100% | | | | | L | | | | | | | | | | L | | | L | L | | L | | | | | |
| FM 1 | | | | | | L | | | | | | | | | L | | | L | L | | L | | L | | | |
| FM 3 | | | | | | | L | | | | | | | | L | | | L | L | | L | L | | | | |
| FM 10 | | | | | | | | L | | | | | | | L | | | L | L | | L | L | L | | | |
| SINGLE | L | | | | | | | | | | | | | | | | L | L | L | L | | | | | | |
| STEP | | L | | | | | | | | | | | | | | | L | L | L | L | | | | | | |
| STEPS | | | L | | | | | | | | | | | | | | L | L | L | L | | L | | | | |
| GHz | | | | L | | | | | | | | | | | | | L | L | L | L | | L | L | | | |
| UNUSED | | | | | L | | | | | | | | | | | | L | L | L | L | L | | | | | |
| UNUSED | | | | | | L | | | | | | | | | | | L | L | L | L | L | | L | | | |
| MHz | | | | | | | L | | | | | | | | | | L | L | L | L | L | L | | | | |
| SERVICE FUNCTION | | | | | | | | L | | | | | | | | | L | L | L | L | L | L | L | | | |
| NOT $\phi$ LOCKED | | | | | | | | | | NOT APPLICABLE | | | | | | | | | | | | | | L | H | |
| ALC UNLEVELED | | | | | | | | | | NOT APPLICABLE | | | | | | | | | | | | | | L | H | |
| FM OVERMOD | | | | | | | | | | NOT APPLICABLE | | | | | | | | | | | | | | L | H | |
| EXTERNAL REF | | | | | | | | | | NOT APPLICABLE | | | | | | | | | | | | | | L | H | |
| OUT OF RANGE | | | | | | | | | | NOT APPLICABLE | | | | | | | | | | | | | | L | H | |

www.valuetronics.com

Table 8-20A
Sht 2 of 2

**Signal Conditions for Front Panel Keyboard to Front Panel Indicators Operation (2 of 2)**

| Output | | | | | | | Key-Code Output | | | | | | | μP Output to Panel Driver | | | | | | | | | Panel Driver Output |
|---|---|---|---|---|---|---|---|---|---|---|---|---|---|---|---|---|---|---|---|---|---|---|---|
| C3H | C4L | C4H | C5L | C5H | C6L | C6H | K6 | K5 | K4 | K3 | K2 | K2 | K0 | NUME | DLE | PRW | A0 | A1 | A2 | FD0 | FD1 | FD2 | FD3 | FD4 | FD5 | FD6 | FD7 | |
| | | | L | | | | L | | L | | L | | | | | | | | | NOT APPLICABLE | | | | | | | | |
| | | | L | | | | L | | L | | L | | L | | | L | L | | L | L | | | | | | | | DL2-1 |
| | | | L | | | | L | | L | | L | L | | | | | | | | NOT APPLICABLE | | | | | | | | |
| | | | L | | | | L | | L | | L | L | L | | | | | | | NOT APPLICABLE | | | | | | | | |
| | | | | L | | | L | | L | L | | | | | | | | | | | | | | | | | | |
| | | | | L | | | L | | L | L | | | L | | | L | L | | | L | | | | | | | | DL4-1 |
| | | | | L | | | L | | L | L | | L | | | | | L | L | L | | L | | | | | | DL4-2 |
| | | | | L | | | L | | L | L | | L | L | | | | | | | NOT APPLICABLE | | | | | | | | |
| | | | | L | | | L | | L | L | L | | | | | L | L | L | | | | | | L | | | | DL4-4 |
| | | | | L | | | L | | L | L | L | | L | | | | | | | NOT APPLICABLE | | | | | | | | |
| | | | | L | | | L | | L | L | L | L | | | | | | | | NOT APPLICABLE | | | | | | | | |
| | | | | L | | | L | | L | L | L | L | L | | | L | L | L | | L | | | | | | | | DL4-0 |
| | | | | | L | | | L | L | | | | | | | L | L | | L | | | | L | | | | | DL2-4 |
| | | | | | L | | | L | L | | | | L | | | L | L | | L | | | L | | | | | | DL2-3 |
| | | | | | L | | | L | L | | | L | | | | L | L | | L | | L | | | | | | | DL2-2 |
| | | | | | L | | | L | L | | | L | L | | | L | | L | L | | | | | | L | | | DL1-6 |
| | | | | | L | | | L | L | | L | | | | | L | | L | L | | | | | | | L | | DL1-7 |
| | | | | | L | | | L | L | | L | | L | | | L | L | | L | | | | | L | | | | DL2-5 |
| | | | | | L | | | L | L | | L | L | | | | L | L | | L | | | | | | L | | | DL2-6 |
| | | | | | L | | | L | L | | L | L | L | | | L | L | | L | | | | | | | L | | DL2-7 |
| | | | | | | | L | L | L | L | | | | | | L | | | L | | | | | | L | | | DL3-6 |
| | | | | | | | L | L | L | L | | | | | | | | | | NOT APPLICABLE | | | | | | | | |
| | | | | | | | L | L | L | L | | L | | | | | | | | NOT APPLICABLE | | | | | | | | |
| | | | | | | | L | L | L | L | | L | L | | | | | | | NOT APPLICABLE | | | | | | | | |
| | | | | | | | L | L | L | L | L | | | | | | | | | NOT APPLICABLE | | | | | | | | |
| | | | | | | | L | L | L | L | L | | L | | | | | | | NOT APPLICABLE | | | | | | | | |
| | | | | | | | L | L | L | L | L | L | | | | | | | | NOT APPLICABLE | | | | | | | | |
| | | | | | | | L | L | L | L | L | L | L | | | | | | | NOT APPLICABLE | | | | | | | | |
| NOT APPLICABLE | | | | | | | | | | | | | | L | H | L | L | L | L | L | | | | | | | | DL0-0 |
| NOT APPLICABLE | | | | | | | | | | | | | | L | H | L | L | L | L | | L | | | | | | | DL0-1 |
| NOT APPLICABLE | | | | | | | | | | | | | | L | H | L | L | L | L | | | L | | | | | | DL0-2 |
| NOT APPLICABLE | | | | | | | | | | | | | | L | H | L | L | L | L | | | | | | L | | | DL0-3 |
| NOT APPLICABLE | | | | | | | | | | | | | | L | H | L | L | L | L | | | | | | | L | | DL0-6 |



www.valuetronics.com

## SERVICE SHEET BD8 (cont'd)

### Front Panel Display, Annuciator and Switch Failures (cont'd)

cessor Circuit Card may be caused by any of the assemblies on the data bus, therefore, the fault location procedure consists of performing the Diagnostic Tests in the order in which they are listed.

### Faulty Data to M/N Phase Detector, LFS Loop DAC or 20/30 Divider

Figure 8-65 shows the circuitry involved in the generation of frequency information to the M/N $\phi$ Detector Circuit Card A3A1A3, the DAC Circuit Card A3A5, and the 20/30 Divider Circuit Card A2A5. It is assumed that the front panel to the

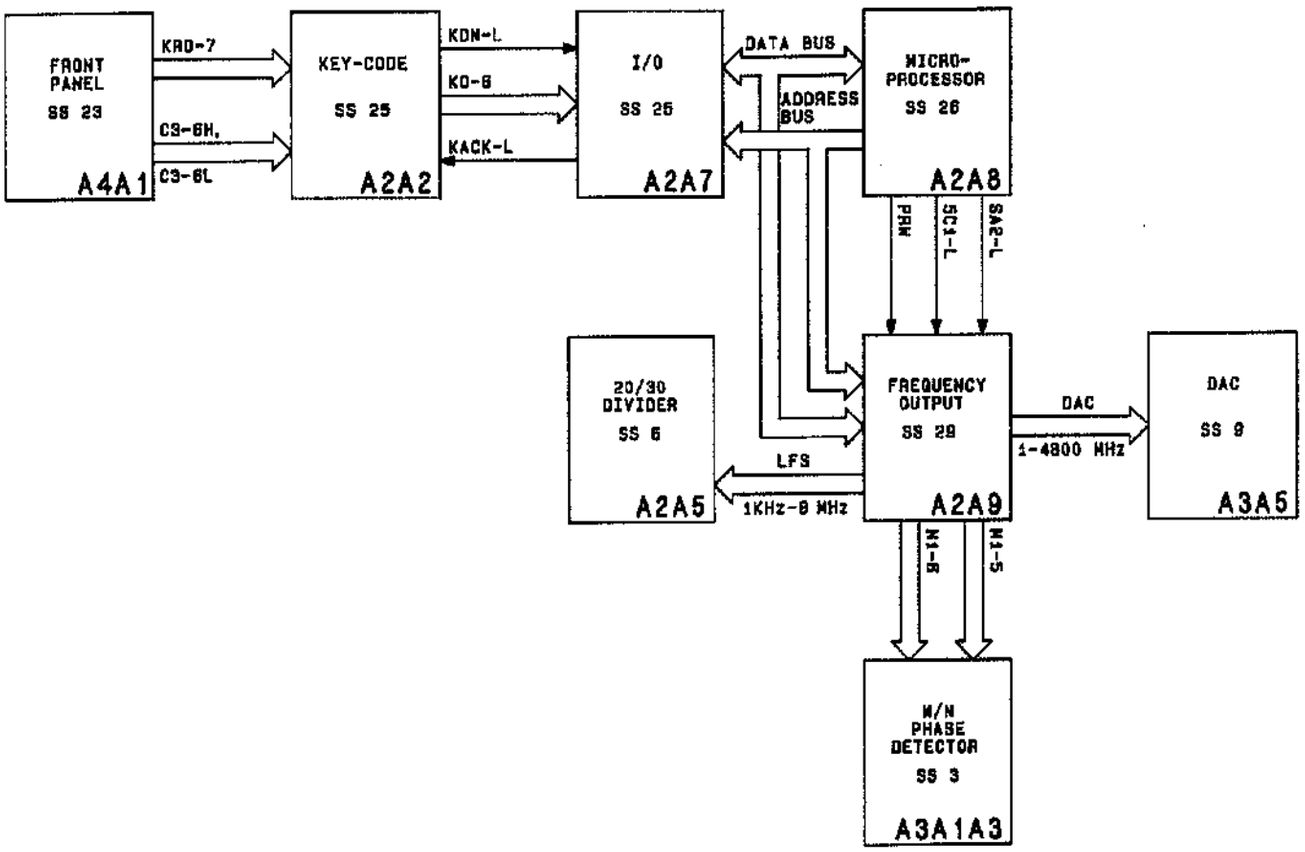


**Figure 8-65. M/N Phase Detector, LFS Loop DAC and 20/30 Divider Block Diagram**



www.valuetronics.com

## SERVICE SHEET BD8 (cont'd)

### Faulty Data to M/N Phase Detector, LFS Loop DAC or 20/30 Divider (cont'd)

Key-Code Circuit Card A2A2 has already been verified. If not, this should be done using the procedures delineated herein. Fault Location should then follow the controller signature analysis troubleshooting procedures in the order in which they are listed.

### Controller Failures Associated with A5 Down Converter Operation

When a failure manifests itself during operation in the low band only, the most probable sources of failure are as shown in Figure 8-66. The recommended fault isolation procedure is to conduct signature analysis of the A5 Microprocessor A5A9, the ROM and Connecter Interface A2A11 and the Microprocessor A2A8 in that order, using the procedures delineated herein.

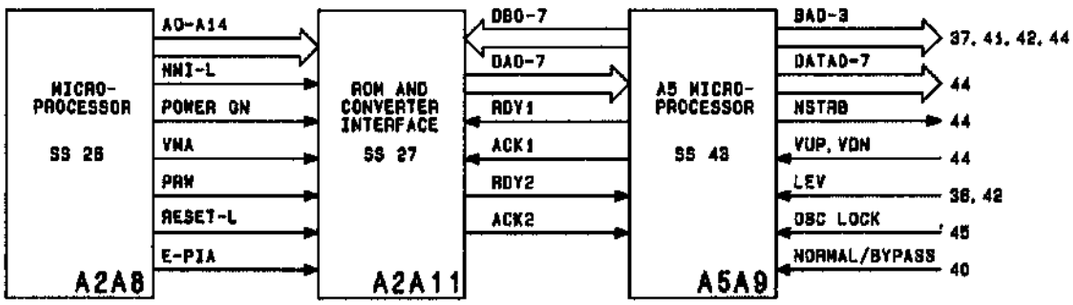


Figure 8-66. A5 Downconverter Microprocessor/Controller Block Diagram



www.valuetronics.com

## SERVICE SHEET BD8 (cont'd)
## DIAGNOSTIC TEST PROCEDURES

### General

The diagnostic test procedures use the controller as a custom function generator to stimulate the digital circuitry in the Signal Generator. Except for the MPU Free Run Diagnostic, the microprocessor is controlled by the diagnostic ROM. This ROM contains special routines that stimulate the circuit under test. It is connected to the controller by the MPU test connector. Shorting A2A8TP5 to the adjacent GND testpoint prevents the microprocessor from reading data from anything except diagnostic switch A2A8S1 and diagnostic ROM A2A8U3. The front panel FREQUENCY MHz display indicates the switch setting followed by "-1". In this setting, the microprocessor repeatedly loops through a sequence of instructions so that "digital signatures" can be taken to verify proper performance or to locate defective components. When the shorting clip is removed from A2A8TP5, in certain tests the microprocessor reads data from the circuit under test and displays a test indication on the front panel.

The signature analyzer is a special counter circuit. It monitors the pulses present on its test probe at each clock pulse, between the start and stop signals. For most of these diagnostic tests, the clock lead is connected to the microprocessor clock. The start and stop leads are connected to the most significant address line, A15. This address line is not used in most of the Signal Generator address decoding circuits. Programming in the diagnostic ROM causes the microprocessor to jump between two address blocks to signal the beginning and end of the test period to the signature analyzer. This eliminates the requirement for a special circuit to generate the signature analyzer start and stop clock.

Signature analysis examines the stream of logic 0's and 1's at the node being probed. A change of the position of even one pulse out of a long stream causes a new signature to be displayed. There is no quantitative information in the value of a signature. A signature is either correct or incorrect. If a signature is incorrect, probe other points to determine whether the circuit driving that node is faulty or is receiving faulty inputs from another circuit.

In the following procedures, do not install an assembly until directed to do so by the procedure. It is possible to obtain a wrong signature in one procedure that is caused by an assembly that should not be installed at that time.

The following diagnostic tests are built into the Signal Generator to aid in troubleshooting the Controller:

a. The MPU Free Run Diagnostic. This test is run before the individual diagnostics controlled by the Diagnostic Switch (A2A8S1) are activated. It checks the MPU kernel (A2A8) to establish that the minimum operating circuits required to run the other diagnostics are functional.

**Table 8-21. Diagnostic Tests**

| Diagnostic Switch Position (A2A8S1) | Test |
|---|---|
| 0 | MPU Timer and IRQ Encoder (A2A8) |
| 1 | Front Panel Display and Driver (A2A1) |
| 2 | HP-IB (A2A9) |
| 3 | Frequency Latches and M/N Encoder (A2A9) |
| 4 | I/O Assembly (A2A7) |
| 5 | Output Section (A2A9) |
| 6 | ROM, continuous with errors displayed (A2A11) |
| 7 | ROM, halt on first error (A2A11) |
| 8 | RAM, halt on first error or after first pass (A2A10) |
| 9 | RAM, halt on first error (A2A10) |
| A | RAM Divide-by-Three Circuit (A2A10) |
| B | Date code for diagnostic ROM (A2A8U3) |

In addition, a typical program and procedure for an HP-IB talk-only diagnostic is presented after the built-in diagnostic procedures.

**NOTE**

*To ensure that the required circuits are operational, perform the diagnostic tests in the order they are presented. If an error condition is indicated, check the related schematic to determine the faulty component. Perform the Diagnostic ROM Date Code Check first to determine if the signatures listed in the diagnostics are valid. The date codes for the diagnostic ROM (A2A8U3) must match that listed in the procedure for the listed signatures to be valid.*



www.valuetronics.com

## SERVICE SHEET BD8 (cont'd)
## Diagnostic ROM Date Code Check

CAUTION

*When taking signatures, it is possible to alter the diagnostic program by inadvertently shorting pins together with the probe. When this occurs, false signatures may be obtained. The diagnostic program can be returned to normal by setting the LINE switch to STBY and back to ON.*

**NOTE**

*If the date code checks procedure cannot be run, try to perform the MPU free run diagnostic to determine if at least the MPU kernal circuits are working. If the signatures are correct, continue performing the diagnostics until an error is found. However, if the procedures can be run but the date codes are incorrect, it is possible to run the diagnostics with the following restriction:*

*Any signature that matches a signature in the following procedures is a good indication that the associated circuits are working properly (but it is not an absolute check).*

1. Set LINE switch to STBY.

CAUTION

*If the A2A8 Microprocessor Assembly is not on an extender, care must be taken when installing the MPU test connector. Because of the width of the connector it is possible to damage adjustment resistors on the A2A7 I/O Assembly.*

2. Connect the MPU test connector (HP Part Number 11726-60001) to the test connectors on top of the A2A8 Microprocessor Assembly.

3. Set diagnostic switch to B and install a shorting clip between A2A8TP5 and the adjacent TP GND.

4. Set LINE switch to ON.

5. Verify the FREQUENCY MHz display indicates 2324 11-1.

### MPU Free Run Diagnostic (A2A8)

In this test, the controller cycles through all combinations of the 16 address lines attempting to read data or instructions. However, the data actually reaching the controller should always be from A2A8U9, the test switch buffer. This setup allows verification of the address decoder circuits and part of the functions internal to microprocessor A2A8U6.

1. Set the LINE switch to STBY and remove all circuit board assemblies from the A2 Controller Assembly except A2A1, A2A3, A2A4, and A2A5.

2. Install the A2A8 Microprocessor Assembly in the A2 Controller on an extender.

3. Install a shorting clip between A2A8TP5 and the adjacent TP GND.

4. Remove the MPU test connector from the A2A8 Assembly.

5. Connect the signature analyzer as follows:

| Signature Analyzer Timing Pod | A2A8 Microprocessor |
|---|---|
| START | TP4 |
| STOP | TP4 |
| CLOCK | TP3 |
| GND | TP GND |

6. Set the signature analyzer pushbuttons as follows:

   START–OUT (positive edge)
   STOP–IN (negative edge)
   CLOCK–IN (negative edge)
   HOLD–OUT (not activated)
   SELF-TEST–OUT (not activated)

7. Set the LINE switch to ON.

8. Use the signature analyzer probe to verify clocking activity on A2A8TP3.

9. Verify the signature is 0001. This signature indicates the free run mode is running correctly. If this signature is incorrect, make sure



www.valuetronics.com

**SERVICE SHEET BD8 (cont'd)**
**MPU Free Run Diagnostic (cont'd)**

the signature analyzer is properly connected and the START, STOP, and CLOCK pushbuttons are in the correct positions (see steps 5 and 6). Be very sure that the equipment is correctly setup because any deviation can cause a different verification signature.

10. The signatures listed in Table 8-22 verify the operation of the MPU, the address lines, and the address decoders.

11. The signatures listed in Table 8-23 verify the operation of the Diagnostic ROM (U3).

**Table 8-22. MPU Address Line and Address Decoder Signatures**

| PIN NO. | SIGNATURE | MNEMONIC |
|---|---|---|
| A2A8B 8 | HAP7 | A11 |
| 11 | 0001 | A15 |
| 12 | CCCC | A1 |
| 14 | 3827 | A13 |
| 15 | 5P18 | SA3-L |
| 16 | 8C96 | A12 |
| 18 | 5H21 | A3 |
| 29 | 5555 | A0 |
| 30 | F488 | SCO-L |
| 32 | 956C | SB4-L |
| 33 | 2828 | SA2-L |
| 34 | 755U | A14 |
| 35 | 7F7F | A2 |
| 36 | 0AFA | A4 |
| A2A8C 1 | 1293 | A10 |
| 2 | HPP0 | A9 |
| 3 | 2H70 | A8 |
| 4 | 52F8 | A6 |
| 17 | U68U | SC1-L |
| 18 | HC89 | A7 |
| 20 | 04P6 | SC2-L |
| 22 | UPFH | A5 |
| 29 | 16HH | DLE |
| 30 | CHOH | NUME |

12. If any of the signatures are incorrect, the signatures listed in Table 8-24 can be used to aid in the isolation of the faulty part.

**Table 8-23. Diagnostic ROM (U3) Signatures**

| PIN NO. | SIGNATURE | MNEMONIC |
|---|---|---|
| A2A8J1-3 | 8C25 | DB-A4 |
| 4 | FCPP | DB-A7 |
| 5 | FAPC | DB-A3 |
| 6 | 78P0 | DB-A2 |
| 9 | 2395 | DB-A5 |
| 10 | PC1A | DB-A6 |
| 11 | FAPC | DB-A8 |
| 12 | C5AA | DB-A1 |

**Table 8-24. MPU Signatures**

| PIN NO. | SIGNATURE | MNEMONIC |
|---|---|---|
| U3-9 | C5AA | DB-A1 |
| 10 | 78P0 | DB-A2 |
| 11 | FAPC | DB-A3 |
| 13 | 8C25 | DB-A4 |
| 14 | 2395 | DB-A5 |
| 15 | PC1A | DB-A6 |
| 16 | FCPP | DB-A7 |
| 17 | FAPC | DB-A8 |
| U6-9 | 5555 | BA0 |
| 10 | CCCC | BA1 |
| 11 | 7F7F | BA2 |
| 12 | 5H21 | BA3 |
| 13 | OAFA | BA4 |
| 14 | UPFH | BA5 |
| 15 | 52F8 | BA6 |
| 16 | HC89 | BA7 |
| 17 | 2H70 | BA8 |
| 18 | HPP0 | BA9 |
| 19 | 1293 | BA10 |
| 20 | HAP7 | BA11 |
| 22 | 3C96 | BA12 |
| 23 | 3827 | BA13 |
| 24 | 755U | BA14 |
| 25 | 0001 | BA15 |



www.valuetronics.com

## SERVICE SHEET BD8 (cont'd)

### Table 8-24. MPU Signatures (cont'd)

| PIN NO. | SIGNATURE | MNEMONIC |
|---|---|---|
| U6-28 | 0000 | D5 |
| 29 | 0001 | D4 |
| 30 | 0001 | D3 |
| 31 | 0000 | D2 |
| 32 | 0001 | D1 |
| 33 | 0001 | D0 |
| U7-3 | 5919 | |
| 4 | UPFH | |
| 6 | OPHU | |
| 8 | C479 | |
| 9 | 9840 | |
| 10 | 8P4P | |
| 11 | A277 | |
| U8-10 | 5555 | A1 |
| 11 | CCCC | A2 |
| 12 | 7F7F | A0 |
| 15 | A277 | C50 |
| U12-8 | 5P19 | |
| U13-4 | HPPO | SB4-L |
| U14-13 | 04P6 | SC2-L |
| 14 | U68U | SC1-L |
| 15 | F488 | SC0-L |
| U15-3 | 160U | |
| 8 | 0PHP | |
| 9 | 0PHU | |
| 11 | 160P | |
| U15-12 | 8P4P | |
| 13 | 9840 | |
| U16-3 | C479 | |
| U17-4 | ACH0 | |
| 12 | C478 | |
| 13 | C479 | |
| U21-9 | A277 | |
| 10 | 9840 | |
| 11 | 8P4P | |
| 12 | 5P18 | SA3-L |
| 13 | 2828 | SA2-L |
| 15 | 3APF | |
| U22-2 | CCCC | BA1 |
| 3 | CCCC | A1 |
| 4 | 5555 | BA0 |
| 5 | 5555 | A0 |
| 6 | 0001 | BA15 |
| 7 | 0001 | A15 |
| U22-8 | HAP7 | BA11 |
| 9 | HAP7 | A11 |
| 11 | 3827 | A13 |
| 12 | 3827 | BA13 |
| 13 | 755U | A14 |
| 14 | 755U | BA14 |
| 15 | 3C96 | A12 |
| 16 | 3C96 | BA12 |
| U22-17 | 7F7F | A2 |
| 18 | 7F7F | BA2 |
| U23-2 | HC89 | BA7 |
| 3 | HC89 | A7 |
| 4 | 1293 | A10 |
| 5 | 1293 | A10 |
| 6 | 0AFA | BA4 |
| 7 | 0AFA | A4 |
| 8 | 5H21 | BA3 |
| 9 | 5H21 | A3 |
| 11 | HPP0 | A9 |
| 12 | HPP0 | BA9 |
| U23-13 | 2H70 | A8 |
| 14 | 2H70 | BA8 |
| 15 | 52F8 | A6 |
| 16 | 52F8 | B-A6 |
| 17 | UPFH | A5 |
| 18 | UPFH | BA5 |
| U25-1 | 0PHP | |
| 11 | 0PHP | BD0 |
| U26-2 | 0PHP | BD9 |
| XA2A8B-8 | HAP7 | A11 |
| 11 | 0001 | A15 |
| 12 | CCCC | A1 |
| 14 | 3827 | A13 |
| 15 | 5P18 | SA3-L |
| XA2A8B-16 | 3C96 | A12 |
| 18 | 5H21 | A3 |
| 29 | 5555 | A0 |
| 30 | F488 | SC0-L |
| 32 | 956C | SB4-L |
| 33 | 2828 | SA2-L |
| 34 | 755U | A14 |
| 35 | 7F7F | A2 |
| 36 | 0AFA | A4 |



www.valuetronics.com

## SERVICE SHEET BD8 (cont'd)

**Table 8-24. MPU Signatures (cont'd)**

| PIN NO. | SIGNATURE | MNEMONIC |
|---|---|---|
| XA2A8C-1 | 1293 | A10 |
| 2 | HPP0 | A9 |
| 3 | 2H70 | A8 |
| 4 | 52F8 | A6 |
| 17 | U68U | SC1-L |
| 18 | HC89 | A7 |
| 20 | 04P6 | SC2-L |
| 22 | UPFH | A5 |
| 29 | 16HH | DLE |
| 30 | CH0H | NUME |
| XA2A8J1-3 | 8C25 | DB-A4 |
| 4 | FCPP | DB-A7 |
| 5 | FAPC | DB-A8 |
| 6 | 78P0 | DB-A2 |
| 9 | 2395 | DB-A5 |
| 10 | PC1A | DB-A6 |
| 11 | FAPC | DB-A8 |
| 12 | C5AA | DB-A1 |

### MPU Timer and IRQ Encoder Diagnostic (A2A8)

In this diagnostic, the controller turns timer A2A8U8 on and off. The timer generates inputs to interrupt priority encoder A2A8U24. This diagnostic also verifies operation of the data bus on Microprocessor Assembly A2A8.

1. Set the LINE switch to STBY.
2. Connect the MPU test connector (HP Part Number 11726-60001) to the test connectors on top of the A2A8 Microprocessor Assembly.

**NOTE**

*Always check the front panel indications and the verification signature for each diagnostic. If they are not correct, reset diagnostic switch A2A8S1. The switch might not make firm contact when switching positions.*

3. Set diagnostic switch A2A8S1 to 0.

**NOTE**

*Steps 4 and 5 require that the A2A1 Front Panel Driver be installed. This assumes that 2A1 is operational. If it is suspected of malfunctioning, continue the test if the displayed information is erratic. Note however, that a display of 15-1 or 02-1 is a strong indication that diagnostic switch A2A8S1 is not positioned correctly.*

4. Set the LINE switch to ON. Verify that the FREQUENCY MHz display indicates 00-1.
5. Remove the short from A2A8TP5. Verify that the FREQUENCY MHz display indicates 00.
6. Touch the logic probe to +5V and verify the signature is 6FC9.
7. The signatures listed in Table 8-25 verify the operation of the timing and interrupt circuits.
8. If any of the signatures are incorrect, the signatures listed in Table 8-26 can be used to aid in the isolation of the faulty part.

**Table 8-25. Timing, Interrupt and Buffered Data Circuits Signatures**

| PIN NO. | SIGNATURE | MNEMONIC |
|---|---|---|
| A2A8B 6 | 2256 | VMA |
| 7 | 6FC9 | IRQA-L |
| 24 | 6FC9 | IRQB-L |
| 25 | 6FC9 | IRQIB-L |
| 27 | F637 | PRW |
| A2A8C 5 | 6700 | BD2 |
| 6 | AA8P | E-PIA |
| 7 | 6FC9 | PHE-H |
| 8 | 98P1 | BD4 |
| 9 | 2U5F | BD6 |
| 15 | 7H31 | BD0 |
| 19 | AA8P | E-HPIB |
| 21 | P054 | BD1 |
| 23 | 810P | BD3 |
| 24 | 944C | BD5 |
| 25 | 2U5F | BD7 |

**Table 8-26. MPU Timer and IRQ Encoder Signatures**

| PIN NO. | SIGNATURE | MNEMONIC |
|---|---|---|
| U8-10 | 7758 | A1 |
| 11 | 5CPA | A2 |
| 12 | 42C3 | A0 |
| 13 | F637 | PRW |
| 16 | 9U10 | |
| 17 | AA8P | E-HPIB |



www.valuetronics.com

## SERVICE SHEET BD8 (cont'd)

**Table 8-26. MPU Timer and IRQ Encoder Signatures (cont'd)**

| PIN NO. | SIGNATURE | MNEMONIC |
|---|---|---|
| 18 | P9C7 | D7 |
| 19 | AAU1 | D6 |
| 20 | 9CPP | D5 |
| 21 | 25AF | D4 |
| 22 | HFP0 | D3 |
| 23 | 5HU3 | D2 |
| 24 | FUF0 | D1 |
| 25 | 8593 | D0 |
| U24-1 | CCAU | |
| 2 | 6FC9 | IRQA-L |
| 3 | 6FC9 | IRQIB-L |
| 6 | CCAU | |
| 7 | 6FC9 | |
| 9 | 6FC9 | |
| 12 | 6FC9 | VTI-L |
| 13 | 6FC9 | IRQB-L |
| 14 | CCAU | IRQ |
| U25-1 | 3316 | |
| 11 | 7H31 | BD0 |
| 13 | P054 | BD1 |
| 14 | 6FC9 | |
| U25-15 | 81OP | BD3 |
| 16 | 6FC9 | |
| 17 | 6700 | BD2 |
| XA2A8B-7 | 6FC9 | IRQA-L |
| 8 | 592A | A11 |
| 11 | 6FC9 | A15 |
| 12 | 5CPA | A1 |
| 14 | 0000 | A13 |
| 16 | H347 | A12 |
| 18 | 5U90 | A3 |
| 24 | 6FC9 | IRQB-L |
| 25 | 6FC9 | IRQIB-L |
| 29 | 7758 | A0 |
| 34 | 0000 | A14 |
| 35 | 42C3 | A2 |
| 36 | 44H4 | A4 |
| XA2A8C-1 | 5UAU | A10 |
| 2 | 0000 | A9 |
| 3 | H5PU | A8 |
| XA2A8C-4 | 2F4P | A6 |
| 5 | 6700 | BD2 |
| 6 | AA8P | E-PIA |
| 8 | 98P1 | BD4 |
| 9 | 2U5F | BD6 |
| 10 | 6FC9 | VTI-L |
| 16 | 7H31 | BD0 |
| 21 | P054 | BD1 |
| 22 | C1U5 | A5 |
| 23 | 810P | BD3 |
| 24 | 944C | BD5 |
| 25 | 2U5F | BD7 |

### Front Panel Display and Driver Diagnostic (A2A1)

In this test, the controller turns all indicators and annunciators on and off so rapidly that only a logic probe or signature analyzer can detect the change. If the signatures are correct, the controller can probably select any required front panel display.

1. Set the LINE switch to STBY.
2. Install the A2A1 Front Panel Driver Assembly, if not previously installed.
3. Install a shorting clip between A2A8TP5 and TP GND and MPU Connector on A2A8.
4. Set diagnostic switch A2A8S1 to position 1.
5. Set LINE switch to ON.
6. Touch the logic probe to +5V and verify the signature is CA4A.
7. Verify that all indicators and annunciators except OVEN COLD and STANDBY are lit and the displays indicate the following:

   RANGE dBm +110

   FREQUENCY MHz .1.0.1.0.1.0.1.0.1.0.1

   In addition, the AUTO SWEEP key light is blinking.
8. If the front panel display differs from step 7, place A2A1 on an extender board. The signatures listed in Table 8-27 verify the operation of the frequency data circuits. The signatures listed in Table 8-28 can be used to aid in the isolation of faulty parts.



www.valuetronics.com

## SERVICE SHEET BD8 (cont'd)

### Table 8-27. Frequency Data Signatures

| PIN NO. | SIGNATURE | MNEMONIC |
|---|---|---|
| A2A1A-34 | U5P4 | FD0 |
| 36 | PCFP | FD5 |
| A2A1B-4 | 932C | FD6 |
| 19 | A3H2 | FD1 |
| 25 | U92H | FD2 |
| 26 | H886 | FD7 |
| 27 | 2599 | FD3 |
| 28 | 0977 | DLE |
| 29 | 3U2F | NUME |
| 31 | 0371 | FD4 |

### Table 8-28. Front Panel Driver Assembly Signatures

| PIN NO. | SIGNATURE | MNEMONIC |
|---|---|---|
| U1-2 | 9691 | BDL3-1 |
| 3 | 9691 | BDL3-4 |
| 6 | 2FHC | |
| 9 | 2FHC | |
| U3-4 | CA4A | |
| 5 | 07PF | BDL4-4 |
| U4-1 | HA9P | BDL4-5 |
| U5-1 | 8F11 | PRW |
| 2 | 548H | |
| 3 | A3H2 | FD1 |
| 4 | 0371 | FD4 |
| 6 | 0798 | |
| 7 | U5P4 | FD0 |
| 8 | PCFP | FD5 |
| 11 | 4UP2 | U5-11 |
| 13 | H886 | FD7 |
| 14 | 932C | FD6 |
| 16 | 9H89 | |
| 17 | 2599 | FD3 |
| 18 | U92H | FD2 |
| 19 | 2UF3 | |
| U6-1 | 8F11 | PRW |
| 2 | 965F | |
| 3 | A3H2 | FD1 |
| 4 | 0371 | FD4 |
| 5 | 672F | |
| 6 | 5624 | |
| 7 | U5P4 | FD0 |
| 8 | PCFP | FD5 |
| 11 | C1PA | U6-11 |
| 12 | 9453 | |
| 13 | H886 | FD7 |
| 14 | 932C | FD6 |
| 15 | FFA9 | |
| 16 | A381 | |
| 17 | 2599 | FD3 |
| 18 | U92H | FD2 |
| 19 | 98C1 | |
| U7-1 | 8F11 | PRW |
| 2 | 8F05 | |
| 3 | A3H2 | FD1 |
| 4 | 0371 | FD4 |
| 5 | FP43 | |
| 6 | 47CF | |
| 7 | U5P4 | |
| 8 | PCFP | FD5 |
| 9 | U72U | |
| U7-11 | U1F9 | U7-11 |
| 12 | F68C | |
| 13 | H886 | FD7 |
| 14 | 932C | FD6 |
| 15 | 9886 | |
| 16 | FA45 | |
| 17 | 2599 | FD3 |
| 18 | U92H | FD2 |
| 19 | 774P | |
| U8-1 | 8F11 | PRW |
| 3 | A3H2 | FD1 |
| 4 | 0371 | FD4 |
| 5 | 9691 | |
| 7 | U5P4 | FD0 |
| 8 | PCFP | FD5 |
| 9 | 9751 | |
| 11 | P31P | U8-11 |
| 13 | H886 | FD7 |
| 14 | 932C | FD6 |
| 15 | 0CF6 | |
| 17 | 2599 | FD3 |
| 18 | U92H | FD2 |
| U9-1 | 8F11 | PRN |
| 2 | F842 | |
| 3 | A3H2 | FD1 |
| 4 | 0371 | FD4 |



www.valuetronics.com

## SERVICE SHEET BD8 (cont'd)

**Table 8-28. Front Panel Driver Assembly Signatures (cont'd)**

| PIN NO. | SIGNATURE | MNEMONIC |
|---|---|---|
| U9-5 | 07PF | |
| 6 | 8F99 | FD0 |
| 7 | U5P4 | FD0 |
| 8 | PCFP | FD5 |
| 9 | HA9P | |
| 11 | F024 | U9-11 |
| 12 | 5F35 | |
| 13 | H886 | FD7 |
| 14 | 932C | FD6 |
| 15 | 8P77 | |
| 17 | 2599 | FD3 |
| 18 | U92H | FD2 |
| 19 | P611 | |
| U10-1 | 8F11 | PRW |
| 2 | 30F8 | |
| 3 | A3H2 | FD1 |
| 4 | 0371 | FD4 |
| 5 | 0HC5 | |
| 6 | 9C3P | DL5-0 |
| 7 | U5P4 | FD0 |
| 8 | PCFP | FD5 |
| 9 | 47C2 | |
| 11 | 2P78 | U10-11 |
| 12 | 9CA4 | |
| 13 | H886 | FD7 |
| 14 | 932C | FD6 |
| 15 | 0C5C | |
| 16 | 69H7 | |
| 17 | 2599 | FD3 |
| 18 | U92H | FD2 |
| 19 | 0149 | |
| U11-1 | 8F11 | PRW |
| 2 | H774 | |
| 3 | A3H2 | FD1 |
| 4 | 0371 | FD4 |
| 5 | C8U9 | U13-5 |
| 6 | 49H7 | U13-18 |
| 7 | U5P4 | FD0 |
| 8 | PCFP | FD5 |
| 9 | 5PFF | U13-8 |
| 11 | C94F | U11-11 |
| 12 | 0HA6 | U12-9 |
| 13 | H886 | FD7 |
| 14 | 932C | FD6 |
| 15 | 37H0 | U13-6 |
| 16 | UU7P | U12-3 |
| 17 | 2599 | FD3 |
| 18 | U92H | FD2 |
| 19 | F111 | U12-17 |
| U12-2 | CA4A | U12-2 |
| 3 | UU7P | U12-3 |
| 8 | 0HA6 | U12-8 |
| 17 | F111 | U12-17 |
| U13-6 | 37H0 | U13-6 |
| 8 | 5PFF | U13-8 |
| U14-1 | PA88 | A0 |
| 2 | FP44 | A1 |
| 3 | HH57 | A2 |
| 4 | 8F11 | PRW |
| 9 | 4UP2 | U5-11 |
| 10 | 2P78 | U10-11 |
| 11 | FO24 | U9-11 |
| 12 | P31P | U8-11 |
| 13 | U1F9 | U7-11 |
| 14 | C1PA | U6-11 |
| 15 | C94F | U11-11 |
| U15-1 | PA88 | A0 |
| 2 | FP44 | A1 |
| 3 | HH57 | A2 |
| 4 | 8F11 | PRW |
| 6 | 3U2F | NUME |
| 9 | UAPU | A-L |
| 10 | 1UC3 | F10-L |
| 11 | 50A7 | F89-L |
| 12 | 6861 | F67-L |
| 13 | HP11 | F45-L |
| 14 | FFHF | F23-L |
| 15 | 4A31 | F01-L |
| P1A-18 | 0HC5 | DL5-4 |
| 20 | UAPU | A-L |
| 22 | CA4A | DL5-5 |
| 25 | CA4A | DL5-6 |
| 28 | 5F35 | DL4-7 |
| 34 | U5P4 | FD0 |
| 36 | PCFP | FD5 |
| P18-1 | 30F8 | DL5-1 |
| 4 | 932C | FD6 |
| 5 | CA4A | +5V |
| 6 | 0000 | GND |



www.valuetronics.com

## SERVICE SHEET BD8 (cont'd)

**Table 8-28. Front Panel Driver Assembly Signatures (cont'd)**

| PIN NO. | SIGNATURE | MNEMONIC |
|---|---|---|
| A2A18-14 | HP11 | F45-L |
| 15 | FFHF | F23-L |
| 16 | 4A31 | F01-L |
| 17 | 6861 | F67-L |
| 18 | 9C3P | DL5-0 |
| 19 | A3H2 | FD1 |
| P1B-23 | CA4A | +5V |
| 24 | 0000 | GND |
| 25 | U92H | FD2 |
| 26 | H886 | FD7 |
| 27 | 2599 | FD3 |
| 28 | 0977 | DLE |
| 29 | 3U2F | NUME |
| 30 | 1UC3 | F10-L |
| 31 | 0371 | FD4 |
| 32 | 50A7 | F89-L |
| 33 | PA88 | A0 |
| 34 | 8F11 | PRW |
| 35 | HH57 | A2 |
| 36 | FP44 | A1 |

### RAM Verification (A2A10)

In this diagnostic, the controller writes and verifies data on RAM Assembly A2A10. The FREQUENCY MHz display gives pass or fail indications.

1. Set LINE switch to STBY.
2. Install the MPU test connector (HP Part Number 11726-60001) to the test connectors on top of A2A8 Microprocessor Assembly.
3. Connect the signature analyzer as shown under MPU Free Run Diagnostic (A2A8) paragraph 5.
4. Install a shorting clip between A2A8TP5 and TP GND.
5. Verify test switch A2A10S1 is set to NORM. Install the RAM assembly (A2A10).
6. Set diagnostic switch A2A8S1 to position 8.
7. Set LINE switch to ON.
8. Verify the FREQUENCY MHz display indicates 08-1. Remove the shorting clip.
9. Touch the logic probe to +5V and verify the signature flickers between 0003 and 0001.
10. Verify the following on the front panel:
    a. The right side of the FREQUENCY MHz display cycles between 08 and 0800.
    b. The RANGE dBm display indicates 0.
    c. All red LEDs and all white annunciators, except OVEN COLD and STBY, cycle on and off.
11. If an error is detected, the displays stop cycling and an error code is displayed.

### Divide-By-Three Diagnostic (P/O A2A10)

1. Verify conditions are as in paragraphs 1 through 4 of RAM Verification (A2A10) above.
2. Install the RAM Assembly (A2A10) on an extender.
3. Set diagnostic switch A2A8S1 to position A and both switches of NORM/TEST switch A2A10S1 to TEST position.
4. Set LINE switch to ON.
5. Verify the FREQUENCY MHz display indicates 10-1.
6. Touch the RESET probe to +5V and verify the signature is U45H.
7. The signatures listed in Table 8-29 verify the operation of the divide-by-three circuits.
8. If any of the signatures are incorrect, the signatures listed in Table 8-30 can be used to isolate the faulty part.

**Table 8-29. Divide-by-Three Circuit Signatures**

| PIN NO. | SIGNATURE | MNEMONIC |
|---|---|---|
| A2A10B 27 | CC55 | PRW |
| 29 | 4UOH | A0 |
| 33 | PPA7 | SA2-L |
| A2A10C 11 | U45H | PHE-H |
| 13 | PPA7 | BD6 |
| 16 | H9A2 | BD0 |
| 22 | 6820 | BD2 |
| 23 | 3248 | BD1 |
| 24 | 8698 | A5 |
| 25 | C4UU | BD3 |
| 26 | 3CP7 | BD4 |
| 27 | 8C35 | BD5 |
| 28 | PPA7 | BD7 |



www.valuetronics.com

## SERVICE SHEET BD8 (cont'd)

### Table 8-30. RAM Assembly Signatures

| PIN NO. | SIGNATURE | MNEMONIC |
|---|---|---|
| U1-1 | 0000 | |
| 2 | U45H | PHE-H |
| 3 | U45H | |
| 4 | 4U08 | |
| 5 | U45H | PHE-H |
| 6 | CC55 | |
| 8 | U45H | |
| 9 | 42U2 | VMA |
| 10 | 0000 | |
| U2-1 | 70C7 | A12 |
| 2 | 84PA | A11 |
| 3 | U45H | A15 |
| 4 | 0000 | A14 |
| 5 | 0000 | A13 |
| 6 | 0000 | |
| 8 | 4U08 | |
| 11 | CC55 | PRW |
| U3-1 | U4HF | |
| 2 | 5A6P | |
| 3 | H9A2 | BD0 |
| 4 | 3248 | BD1 |
| 5 | AP83 | |
| 6 | H564 | |
| 7 | U032 | BD2 |
| 8 | C4UU | BD3 |
| 9 | 3149 | |
| U3-11 | CCH4 | |
| 12 | A0P8 | |
| 13 | 5FH2 | BD4 |
| 14 | 0U19 | |
| 15 | 0000 | |
| U4-1 | A1AU | |
| 2 | 0U19 | |
| 3 | PPA7 | BD7 |
| 4 | 0U19 | |
| 5 | PPA7 | BD6 |
| 6 | 0U19 | |
| 7 | 8C35 | BD5 |
| 8 | 5FH2 | |
| 9 | 3CP7 | BD4 |
| 11 | C4UU | BD3 |
| 12 | 0U19 | |
| 13 | U032 | BD2 |
| 14 | AUU1 | |
| 15 | 3248 | BD1 |
| 16 | 572H | |
| 17 | H9A2 | BD0 |
| 18 | 09A5 | |
| U5-3 | 0000 | |
| 4 | A0P8 | |
| 5 | 3149 | |
| 6 | H564 | |
| U5-7 | AP83 | |
| 8 | 5A6P | |
| 9 | 09A5 | |
| 10 | 572H | |
| 11 | AUU1 | |
| 13 | 0U19 | |
| 14 | 5FH2 | |
| 15 | 0U19 | |
| 16 | 0U19 | |
| 17 | 0U19 | |
| U6-1 | 0000 | A7 |
| 2 | 70C7 | A6 |
| 3 | 8698 | A5 |
| 4 | 4A48 | A4 |
| 5 | A9P9 | A3 |
| 6 | 63CC | A2 |
| 7 | 2PFF | A1 |
| 8 | 4U0H | A0 |
| 18 | U45H | |
| 19 | 70C7 | A10 |
| 20 | 4U08 | |
| 21 | CC55 | |
| 22 | 70C7 | A9 |
| 23 | 0000 | A8 |
| U7-1 | 4U0H | A0 |
| 2 | CC55 | PRW |
| 3 | U45H | PHE-H |
| 5 | PPA7 | SA2-L |
| 6 | 8698 | A5 |
| 10 | CCH4 | |
| 11 | U4HF | |
| XA2A10B-4 | 84PA | A11 |
| 6 | 42U2 | VMA |



www.valuetronics.com

## SERVICE SHEET BD8 (cont'd)

**Table 8-30. RAM Assembly Signatures (cont'd)**

| PIN NO. | SIGNATURE | MNEMONIC |
|---|---|---|
| XA2A10B-11 | U45H | A15 |
| 12 | 2PFF | A1 |
| 14 | 0000 | A13 |
| 16 | 70C7 | A12 |
| 18 | A9P9 | A3 |
| 27 | CC55 | PRW |
| 29 | 4U0H | A0 |
| 33 | PPA7 | SA2-L |
| 34 | 0000 | A14 |
| 35 | 63CC | A2 |
| 36 | 4A48 | A4 |
| XA2A10C-1 | 70C7 | A10 |
| 2 | 70C7 | A9 |
| 3 | 0000 | A8 |
| 4 | 70C7 | A6 |
| 11 | U45H | PHE-H |
| 13 | PPA7 | BD6 |
| 16 | H9A2 | BD0 |
| 19 | 0000 | A7 |
| XA2A10C-22 | 6820 | BD2 |
| 23 | 3248 | BD1 |
| 24 | 8698 | A5 |
| 25 | C4UU | BD3 |
| 26 | 5FH2 | BD4 |
| 27 | 8C35 | BD5 |
| 28 | PPA7 | BD7 |

### Divide-By-Three Diagnostic (P/O A2A10) (cont'd)

9. Set the LINE switch to STBY.
10. Set NORM/TEST switch A2A10S1 to NORM position.
11. Remove the RAM assembly from the extender and install it in the instrument.

### ROM Diagnostic (A2A11)

This diagnostic verifies the correct checksum in the ROM. A similar diagnostic is run every time the Signal Generator is turned on. In this test, the backup copy of the program (in the diagnostic ROM) is used. In addition, the diagnostic ROM checksum is tested.

1. Set LINE switch to STBY.
2. Install the ROM Assembly (A2A11). If not already installed, install the RAM assembly A2A10.
3. Install a shorting clip between A2A8TP5 and TP GND.
4. Install the MPU test connector to the test connectors on top of A2A8 Microprocessor Assembly.
5. Set diagnostic switch A2A8S1 to position 6.
6. Verify the signature analyzer is connected as shown under MPU Free Run Diagnostic (A2A8) paragraph 5.

**NOTE**

*Position 7 is similar to position 6. The only difference is that in position 7 the ROM diagnostic halts on the first error. Use switch position 7 for detecting intermittent problems. Position 6 resumes testing after each error to detect multiple errors.*

7. Set LINE switch to ON.
8. Verify the FREQUENCY MHz display indicates 06-1. Remove the shorting clip from A2A8TP5.
9. Verify the FREQUENCY MHz display indicates 0600. If no errors are detected, 00 blinks on and off. If an error is detected, the last two digits of the displayed number indicate which ROM failed. Multiple failures are indicated by a succesion of error numbers. The error numbers and the corresponding failed ROM are shown in Table 8-31.

**Table 8-31. ROM Error Codes**

| Error Code | Defective ROM |
|---|---|
| 06 — 01 | A2A11U5 |
| 06 — 02 | A2A11U6 |
| 06 — 08 | A2A11U7 |
| 06 — 04 | A2A8U3 |

### ROM Assembly Check (A2A11)

This diagnostic checks the interconnections between the ROM Assembly (A2A11) and the MPU.



www.valuetronics.com

## SERVICE SHEET BD8 (cont'd)

1. Set LINE switch to STBY.
2. Install A2A11 on an extender and install test connector, 08673-60123, and extender cable, 08673-60021, on A2A11J1.
3. Set A2A8S1 to position C.
4. Install shorting clip between A2A8TP5 and TP GND.
5. Set LINE switch to ON.
6. Verify the FREQUENCY MHz display indicates 12-1.
7. Remove shorting clip from TP GND.
8. Frequency MHZ display should indicate 1200 if no faults are present. If the indication is 1201 a fault has occurred which probably is in the connections between the MPU and A2A11U4. If the indication is 1203, a fault has occurred which is probably in the interconnections of the data lines or buffers. If the indication is 1202, a fault has occurred which is probably associated with A2A11U4 and its interconnections. Replace the shorting clip if signature analysis is to be performed.
9. If any of the displays show a fault has occurred, the signatures shown in Table 8-32 can be used to aid in the isolation of the failed part.

**Table 8-32. ROM and Converter Signatures**

| PIN NO. | SIGNATURE | MNEMONIC |
|---|---|---|
| U1-11 | 5UHF | RDY 1 |
| 12 | 5UHF | |
| 17 | CA65 | DA0 |
| 18 | CA65 | |
| U2-2 | F72U | |
| 3 | F72U | DA1 |
| 4 | 9C23 | |
| 5 | 9C23 | DA3 |
| 6 | 34P8 | |
| 7 | 34P8 | DA5 |
| 8 | AF34 | |
| 9 | AF34 | DA6 |
| 11 | 2175 | DA7 |
| 12 | 2175 | |
| 13 | 426P | ACK1 |
| 14 | 426P | |
| 15 | 678F | DA4 |
| 16 | 678F | |
| 17 | 7PF3 | DA2 |
| 18 | 7PF3 | |
| U3-9 | 27PF | PRW |
| U4-10 | CA65 | |
| 11 | F72U | |
| 12 | 7PF3 | |
| 13 | 9C23 | |
| 14 | 678F | |
| 15 | 34P8 | |
| 16 | AF34 | |
| U4-17 | 2175 | |
| 19 | 5UHF | |
| 21 | 27PF | PRW |
| 25 | 6163 | E-HPIB |
| 26 | 4074 | D7 |
| 27 | 64FA | D6 |
| 28 | 2960 | D5 |
| 29 | F3UU | D4 |
| 30 | C274 | D3 |
| 31 | 7484 | D2 |
| 32 | 7222 | D1 |
| 33 | 3C7U | D0 |
| 34 | 468U | RESET-L |
| 35 | P672 | BA1 |
| 36 | C496 | 8A0 |
| 38 | 468U | NMI-L |
| U5-2 | 2FF0 | BA12 |
| 3 | PH75 | BA7 |
| 4 | 4C02 | BA6 |
| 5 | HF5P | BA5 |
| 6 | U6AC | BA4 |
| 7 | 2176 | BA3 |
| 8 | 49C0 | BA2 |
| 9 | P672 | BA1 |
| 10 | C496 | BA0 |
| 11 | 3C7U | D0 |
| 12 | 7222 | D1 |
| U5-13 | 7484 | D2 |
| 15 | C274 | D3 |
| 16 | F3UU | D4 |
| 17 | 2960 | D5 |



www.valuetronics.com

## SERVICE SHEET BD8 (cont'd)

### Table 8-32. ROM and Converter Signatures (cont'd)

| PIN NO. | SIGNATURE | MNEMONIC |
|---|---|---|
| U5-18 | 64FA | D6 |
| 19 | 4074 | D7 |
| 21 | 2FF0 | BA10 |
| 23 | 5002 | BA11 |
| 24 | 2FF0 | BA9 |
| 25 | 3A4H | BA8 |
| U6-2 | 2FF0 | BA12 |
| 3 | PH75 | BA7 |
| 4 | 4C02 | BA6 |
| 5 | HF5P | BA5 |
| 6 | U6AC | BA4 |
| 7 | 2176 | BA3 |
| 8 | 49C0 | BA2 |
| 9 | P672 | BA1 |
| 10 | C496 | BA0 |
| 11 | 3C7U | D0 |
| U6-12 | 7222 | D1 |
| 13 | 7484 | D2 |
| 15 | C274 | D3 |
| 16 | F3UU | D4 |
| 17 | 2960 | D5 |
| 18 | 64FA | D6 |
| 19 | 4074 | D7 |
| 21 | 2FF0 | BA10 |
| 23 | 5002 | BA11 |
| 24 | 2FF0 | BA9 |
| 25 | 3A4H | BA8 |
| U7-2 | 2FF0 | BA12 |
| 3 | PH75 | BA7 |
| 4 | 4C02 | BA6 |
| 5 | HF5P | BA5 |
| 6 | U6AC | BA4 |
| 7 | 2176 | BA3 |
| 8 | 49C0 | BA2 |
| 9 | P672 | BA1 |
| 10 | C496 | BA0 |
| 11 | 3C7U | D0 |
| 12 | 7222 | D1 |
| 13 | 7484 | D2 |
| 15 | C274 | D3 |
| 16 | F3UU | D4 |
| 17 | 2960 | D5 |
| 18 | 64FA | D6 |

| PIN NO. | SIGNATURE | MNEMONIC |
|---|---|---|
| U7-19 | 4074 | D7 |
| 21 | 2FF0 | BA10 |
| 23 | 5002 | BA11 |
| 24 | 2FF0 | BA9 |
| U7-25 | 3A4H | BA8 |
| U8-1 | C1A5 | |
| 2 | 3A4H | BA14 |
| 3 | 3A4H | BA13 |
| 4 | 2FF0 | BA10 |
| 5 | 5002 | BA11 |
| 6 | 2FF0 | BA12 |
| 7 | HF5P | BA5 |
| 8 | 2FF0 | BA9 |
| 9 | 4C02 | BA6 |
| 10 | 3A4H | BA8 |
| 11 | PH75 | BA7 |
| U9-2 | C1A5 | VMA |
| 3 | C1A5 | BVMA |
| 4 | 5002 | A11 |
| 5 | 5002 | BA11 |
| 6 | C496 | A0 |
| 7 | C496 | BA |
| 8 | P672 | A1 |
| 9 | P672 | BA1 |
| 11 | 49C0 | BA2 |
| 12 | 49C0 | A2 |
| 13 | 2FF0 | BA12 |
| 14 | 2FF0 | A12 |
| 15 | 3A4H | BA13 |
| 16 | 3A4H | A13 |
| 17 | 3A4H | BA14 |
| 18 | 3A4H | A14 |
| U10-2 | 3A4H | A8 |
| 3 | 3A4H | BA8 |
| 4 | 2FF0 | A9 |
| 5 | 2FF0 | BA9 |
| 6 | 2FF0 | A10 |
| 7 | 2FF0 | BA10 |
| 8 | PH75 | A7 |
| 9 | PH75 | BA7 |
| 11 | 4C02 | BA6 |
| 12 | 4C02 | A6 |



www.valuetronics.com

## SERVICE SHEET BD8 (cont'd)

Table 8-32. ROM and Converter Signatures (cont'd)

| PIN NO. | SIGNATURE | MNEMONIC |
|---|---|---|
| U10-13 | HF5P | BA5 |
| 14 | HF5P | A5 |
| 15 | U6AC | BA4 |
| 16 | U6AC | A4 |
| 17 | 2176 | BA3 |
| 18 | 2176 | A3 |
| XA11A-4 | 5002 | A11 |
| 6 | C1A5 | VMA |
| 12 | P672 | A1 |
| 13 | 468U | NMI-L |
| 14 | 3A4H | A13 |
| 16 | 2FF0 | A12 |
| 18 | 2176 | A3 |
| 26 | 468U | RESET-L |
| XA11A-27 | 27PF | PRW |
| 29 | C496 | A0 |
| 34 | 3A4H | A14 |
| 35 | 49C0 | A2 |
| 36 | U6AC | A4 |
| XA11C-1 | 2FF0 | A10 |
| 2 | 2FF0 | A9 |
| 3 | 3A4H | A8 |
| 4 | 4C02 | A6 |
| 13 | 8CH6 | BD6 |
| 16 | H463 | BD0 |
| 17 | 6163 | E-HP1B |
| 19 | PH75 | A7 |
| 22 | CA9H | BD2 |
| 23 | 9H3P | BD1 |
| 24 | HF5P | A5 |
| 25 | 5H68 | BD3 |
| 26 | 2FP3 | BD4 |
| 27 | P779 | BD5 |
| 28 | 68C6 | BD7 |

### Frequency Output Diagnostic (A2A9)

This diagnostic verifies proper operation of the frequency latches and M and N encoder circuits. A special connection to the signature analyzer clock is needed because some of these circuits are too slow to generate stable signatures with the controller clock.

**NOTE**

*In addition to this diagnostic, the operation of the frequency output section of the A2A9 Assembly can be checked using the special extender (HP Part Number 11726-60003). Note that all boards must be installed in the instrument if the special extender is being used. Refer to Table 8-5 for listings of the M/N numbers and the related frequencies.*

1. Set LINE switch to STBY.
2. Verify that only A2A1, A2A3, A2A4, A2A5 and A2A8 are the only circuit board assemblies of the A2 Controller that are installed.
3. Install the Frequency Output-HPIB Assembly (A2A9) on an extender. Do not use the special extender (HP Part Number 11726-60003) as this extender may cause different signatures to be displayed.
4. Set the diagnostic switch A2A8S1 to position 3.
5. Connect the signature analyzer as follows:

| Signature Analyzer Lead | Terminal |
|---|---|
| START | A2A8TP4 |
| STOP | A2A8TP4 |
| CLOCK | A2A9TP3 |
| GND | A2A8TP GND |

6. Set the signature analyzer pushbuttons as follows:

   START—OUT (positive edge)
   STOP—IN (negative edge)
   CLOCK—IN (negative edge)
   SELF-TEST—OUT (not activated)

7. Install a shorting clip between A2A8TP5 and TP GND.
8. Connect the MPU test connector to the test connectors on the top of the A2A8 Microprocessor asssembly.
9. Set LINE switch to ON and verify the FREQUENCY MHz display indicates 03-1.
10. Press the logic probe RESET and verify the signature is A52A.



www.valuetronics.com

## SERVICE SHEET BD8 (cont'd)

### Frequency Output Diagnostic (A2A9) (cont'd)

11. The signatures listed in Table 8-33 verify the operation of the output lines of the frequency output section of A2A9. If an incorrect output line signature is found, check the input line signatures listed in Table 8-34.

12. If incorrect signatures show a fault has occurred, the signatures of Table 8-35 can be used to isolate the source of the fault.

**Table 8-33. Frequency Diagnostic Output Lines Signatures**

| PIN NO. | SIGNATURE | MNEMONIC |
|---|---|---|
| A2A9A 1 | 413H | M5 |
| 2 | 0FP0 | M3 |
| 3 | P101 | M4 |
| 4 | 7378 | M1 |
| 5 | 994A | M2 |
| 6 | 0H32 | N5 |
| 7 | 95H0 | N6 |
| 8 | 5AFU | N3 |
| 9 | F813 | N4 |
| 10 | 6876 | N2 |
| 11 | 693P | N1 |
| 21 | 1H63 | 800K |
| 22 | 758P | 200K |
| 23 | UA07 | DAC3200 |
| 24 | 468C | DAC800 |
| 25 | C253 | DAC400 |
| 26 | H6F1 | DAC200 |
| 27 | 1AH5 | DAC100 |
| 28 | 1U41 | DAC80 |
| 29 | 839U | DAC20 |
| 30 | PH1A | DAC4800 |
| 31 | 0PC1 | 1 MHZ |
| 32 | 8758 | 2 MHZ |
| 33 | F3AF | 4 MHZ |
| 34 | 61H6 | 8 MHZ |
| 35 | H652 | DAC 10 MHz |
| 36 | 912C | DAC 40 MHz |
| A2A9B 2 | C1HP | 20K |
| 3 | 58PU | 40K |
| 4 | 63CH | 10K |
| 5 | 3AF7 | 400K |
| 6 | PC1H | 100K |
| 11 | AF77 | 80K |
| 20 | 3CHU | 1K |
| 21 | 8PU7 | 4K |
| 22 | 1HPU | 2K |
| 23 | F77C | 8K |
| 25 | A52A | IRQ1B-L |

**Table 8-34. Frequency Diagnostic Input Lines Signatures**

| PIN NO. | SIGNATURE | MNEMONIC |
|---|---|---|
| A2A9B 12 | A52A | A1 |
| 16 | A52A | A2 |
| 26 | A52A | RESET-L |
| 27 | 0000 | PRW |
| 29 | 0000 | A0 |
| 33 | 0000 | SA2-L |
| 34 | A52A | E-HPIB |
| 35 | 0000 | SC1-L |
| 36 | 0000 | A4 |
| A2A9C 5 | 0000 | BD2 |
| 6 | A52A | BD1 |
| 8 | A52A | BD4 |
| 9 | A52A | BD6 |
| 16 | A52A | BD0 |
| 23 | 0000 | BD3 |
| 24 | 0000 | BD5 |
| 25 | 0000 | BD7 |

**Table 8-35. Frequency Output — HP-IB Assembly Diagnostic**

| PIN NO. | SIGNATURE | MNEMONIC |
|---|---|---|
| U1-2 | H46U | |
| 3 | 872F | |
| 4 | A52A | |
| 5 | F680 | |
| 6 | H46U | |
| 7 | 92P4 | |
| 10 | 468C | |
| 11 | UA07 | |
| 12 | 4830 | |
| U2-1 | UA07 | |
| 3 | 468C | |
| 5 | C253 | |
| 7 | H6F1 | |
| 9 | 1AH5 | |
| 10 | 693P | |
| 11 | 6876 | |



www.valuetronics.com

## SERVICE SHEET BD8 (cont'd)

### Table 8-35. Frequency Output — HP-IB Assembly Signatures (cont'd)

| PIN NO. | SIGNATURE | MNEMONIC |
|---|---|---|
| U2-12 | 5AFU | |
| 13 | F813 | |
| 14 | P028 | |
| U3-1 | PH1A | |
| 2 | CUUU | |
| 3 | 1UF3 | |
| 5 | P101 | |
| 6 | 1AH5 | |
| 7 | 5PUP | |
| 10 | 442C | |
| 11 | P417 | |
| 13 | 0H32 | |
| 14 | 95H0 | |
| U4-3 | 1U41 | |
| 4 | CUUU | |
| 5 | 912C | |
| 7 | 839U | |
| 9 | 1AH5 | |
| 10 | 3F60 | |
| 11 | A95A | |
| 12 | 5PUP | |
| 13 | P101 | |
| 14 | 1UF3 | |
| 15 | 1AH5 | |
| U5-2 | 0H80 | |
| 3 | 8UF3 | |
| 4 | F794 | |
| 5 | PH44 | |
| 6 | 0H80 | |
| 7 | HC41 | |
| 10 | H6F1 | |
| U5-11 | C253 | |
| 12 | 93P4 | |
| 13 | F680 | |
| 14 | 872F | |
| 15 | F794 | |
| XA9A-1 | 413H | M5 |
| 2 | 0FP0 | M3 |
| 3 | P101 | M4 |
| 4 | 7378 | M1 |
| 5 | 994A | M2 |
| 6 | 0H32 | N5 |
| 7 | 95H0 | N6 |
| 8 | 5AFU | N3 |
| 9 | F813 | N4 |
| 10 | 6876 | N2 |
| 11 | 693P | N1 |
| 21 | 1H63 | 800K |
| 22 | 758P | 200K |
| 23 | UA07 | DAC 3200 MHz |
| 24 | 468C | DAC 800 MHz |
| 25 | C253 | DAC 400 MHz |
| 26 | H6F1 | DAC 200 MHz |
| 27 | 1AH5 | DAC 100 MHz |
| 28 | 1U41 | DAC 80 MHz |
| 29 | 839U | DAC 20 MHz |
| 30 | PH1A | DAC 4800 MHz |
| XA9A-31 | OPC1 | DAC 1 MHz |
| 32 | 8758 | DAC 2 MHz |
| 33 | F3AF | DAC 4 MHz |
| 34 | 61H6 | DAC 8 MHz |
| 35 | H652 | DAC 10 MHz |
| 36 | 912C | DAC 40 MHz |
| XA9B-2 | C1HP | 20K |
| 3 | 58PU | 40K |
| 4 | 63CH | 10K |
| 5 | 3AF7 | 400K |
| 6 | PC1H | 100K |
| 11 | AF77 | 80K |
| 12 | A52A | A1 |
| 16 | A52A | A2 |
| 20 | 3CHU | 1K |
| 21 | 8PU7 | 4K |
| 22 | 1HPU | 2K |
| 23 | F77C | 8K |
| 25 | A52A | IRQ1B-L |
| 29 | 0000 | A0 |
| 33 | 0000 | SA2-L |
| 35 | 0000 | SC1-L |
| 36 | 0000 | A4 |
| XA9C-5 | 0000 | BD2 |
| 6 | A52A | BD1 |
| 8 | A52A | BD4 |
| XA9C-9 | A52A | BD6 |
| 16 | A52A | BD0 |
| 23 | 0000 | BD8 |
| 24 | 0000 | BD5 |
| 25 | 0000 | BD7 |



www.valuetronics.com

## SERVICE SHEET BD8 (cont'd)

### HP-IB Diagnostic (A2A9)

This diagnostic verifies that most of the HP-IB circuits are nominally working. It does not verify that the Signal Generator can listen or respond to some of the signals that are tested in the Operator's Checks in Section III. The front panel HP-IB status indicators are not programmed for this diagnostic.

**NOTE**

*In addition to this diagnostic, there are two other methods to check the HP-IB. The first is to perform the Remote Operator's Check in Section III and troubleshoot the specific lines that do not respond correctly. (Affected lines are identified in Section III text that describes each of the tested messages.) The other is to perform the External Controller HP-IB Diagnostic Procedure that is located after these diagnostics. It is sometimes more convenient to use more than one method to isolate a fault.*

1. Set LINE switch to STBY.
2. Set HP-IB address switch A2A9S1 to 0011 0011. This is the factory setting for the switch and is required to run this diagnostic correctly.
3. Disconnect HP-IB connector on rear panel.
4. Install a shorting clip between A2A8TP5 and TP GND and the MPU connector on top of A2A8.
5. Set diagnostic switch A2A8S1 to position 2.
6. Connect the clock input of the signature analyzer to A2A8TP3.
7. Set LINE switch to ON and verify the FREQUENCY MHz display indicates 02-1.
8. Remove the shorting clip from A2A8TP5 and verify the FREQUENCY MHz indicates 00110011 (the setting of A2A9S1).
9. Set the LINE switch to STBY. Install a shorting clip between A2A8TP5 and TP GND. Set LINE switch to ON.
10. Press the logic probe RESET and verify the signature is CA25.
11. The signatures listed in Table 8-36 verify the operation of the output lines of the HP-IB section of A2A9. If one or more of the signatures are incorrect, check the input lines signatures listed in Table 8-37.

**Table 8-36. HP-IB Diagnostic Output Lines Signatures**

| PIN NO. | SIGNATURE | MNEMONIC |
|---|---|---|
| A2A9B 14 | 7CH9 | DIO6 |
| A2A9C 7 | CA25 | EOI |
| 11 | CU22 | DIO1 |
| 12 | F8U4 | DIO2 |
| 13 | 8888 | DIO3 |
| 14 | U21P | DIO4 |
| 15 | U890 | DIO5 |
| 17 | 4A65 | DIO7 |
| 18 | FUFH | DIO8 |
| 19 | CA25 | ATN |
| 20 | CA25 | SRQ |
| 26 | CA25 | REN |
| 27 | CA25 | IFC |
| 28 | CA25 | NRFD |
| 29 | CA25 | NDAC |
| 30 | CA25 | DAV |

**Table 8-37. HP-IB Diagnostic Input Lines Signatures**

| PIN NO. | SIGNATURE | MNEMONIC |
|---|---|---|
| A2A9B 12 | P4AC | A1 |
| 15 | 3F76 | SA3-L |
| 16 | P270 | A2 |
| 26 | CA25 | RESET-L |
| 27 | 0UF9 | PRW |
| 29 | 3C25 | A0 |
| 33 | CU0U | SA2-L |
| 34 | C5PF | E-HPIB |
| 35 | CH1A | SC1-L |
| 36 | PU59 | A4 |
| A2A9C 5 | H8F1 | BD2 |
| 6 | 6P92 | BD1 |
| 8 | 9509 | BD4 |
| 9 | 45H1 | BD6 |
| 16 | A40F | BD0 |
| 23 | 15FU | BD3 |
| 24 | U5C7 | BD5 |
| 25 | 6FH1 | BD7 |

12. If any incorrect signatures occur, Table 8-38 can be used to isolate the source of the fault.



www.valuetronics.com

## SERVICE SHEET BD8 (cont'd)

13. Remove the A2A9 Assembly from the extender and install it in the instrument.

**NOTE**

*If necessary, return the HP-IB address switch to its previous setting.*

**Table 8-38. HP-IB Diagnostic Signatures**

| PIN NO. | SIGNATURE | MNEMONIC |
|---|---|---|
| U6-8 | 0UF9 | |
| 10 | 0UF9 | PRW |
| 11 | 3FU7 | |
| 13 | 3F76 | SA3-L |
| | | |
| U7-1 | CA25 | RESET-L |
| 2 | CA25 | RESET-L |
| 3 | 0000 | |
| 4 | 86H2 | |
| 5 | C5PF | |
| 6 | 0UF9 | |
| | | |
| 8 | 891C | |
| 9 | 0UF9 | PRW |
| 10 | 86H2 | |
| 11 | CA25 | |
| 12 | 0UF9 | PRW |
| 13 | C5PF | E-HPIB |
| | | |
| U8-1 | 3C25 | A0 |
| 2 | P4AC | A1 |
| 3 | P270 | A2 |
| 4 | CH1A | SC1-L |
| 5 | CU0U | SA2-L |
| | | |
| 12 | A52A | 80B |
| 13 | A52A | 80A |
| 14 | A52A | 809 |
| 15 | A52A | 808 |
| | | |
| U9-1 | PU59 | A4 |
| 2 | 557F | |
| 5 | C5PF | E-HPIB |
| 6 | 0UF9 | |
| 10 | C5PF | |
| | | |
| 11 | 0UF9 | |
| 12 | 86H2 | |
| 13 | 3FU7 | |
| | | |
| U10-1 | 7FH7 | |
| 2 | 7FH7 | |
| 3 | C5PF | E-HPIB |
| 4 | 0000 | |
| 8 | 3FU7 | |
| 9 | CA25 | |
| 10 | 0UF9 | |
| | | |
| U10-12 | CA73 | |
| 13 | FU7P | |
| 14 | 92A9 | |
| 15 | 9U8F | |
| | | |
| 16 | FC36 | |
| 17 | 5763 | |
| 18 | 7C58 | |
| 19 | 3171 | |
| 21 | 3C25 | |
| | | |
| 22 | P4AC | |
| 23 | P270 | A4 |
| 24 | CA25 | IFC |
| 25 | CA25 | REN |
| 26 | CA25 | ATN |
| | | |
| 27 | CA25 | SRQ |
| 28 | CU22 | IB1 |
| 29 | F8U4 | IB2 |
| 30 | 8888 | IB3 |
| 31 | U21P | IB4 |
| | | |
| 32 | U890 | IB5 |
| 33 | 7CH9 | IB6 |
| 34 | 4A65 | IB7 |
| 35 | FUFH | IB8 |
| | | |
| 36 | FUFH | IB8 |
| 37 | CA25 | NRFD |
| 38 | CA25 | NDAC |
| 39 | CA25 | E01 |
| | | |
| U11-1 | 7FH7 | |
| 2 | CU22 | DI01 |
| 3 | F8U4 | DI02 |
| 4 | 8888 | DI03 |
| 5 | U21P | DI04 |
| | | |
| 6 | U890 | DI05 |
| 7 | 7CH9 | DI06 |
| 8 | 4A65 | DI07 |
| 9 | FUFH | DI08 |
| 10 | 7FH7 | |

### HP-IB Diagnostic — Talk Only Mode

In this test, the controller reads the address switch on top of the A2A8 Microprocessor Assembly and displays the switch setting on the FREQUENCY MHz display. It then puts the instrument into the



www.valuetronics.com

### SERVICE SHEET BD8 (cont'd)

talk only mode and transmits data on the HP-IB. All 8 bit values from 0 to 255 are sent continuously. This data can be read and analyzed by an external controller.

1. Set the LINE switch to STBY.
2. Set test switch A2A8S1 on the Microprocessor Assembly to position 2.
3. Connect the MPU test connector (HP Part Number 11726-60001) to the test connectors on top of the A2A8 assembly.
4. Install a shorting clip between A2A8TP5 and the adjacent TP GND.
5. Set the LINE switch to ON.
6. Remove the short from A2A8TP5. Verify the FREQUENCY MHz display indicates the HP-IB address switch setting. If a Signal Generator addressing problem is suspected, change the address switch to several positions and check that each setting appears in the FREQUENCY MHz display as it is changed.

**NOTE**

*Disregard the front panel HP-IB annunciators for this diagnostic.*

7. Figure 8-68 is a sample program for the HP 9825A (HPL) or the HP 85 (BASIC) computing controllers. It reads the data the Signal Generator is sending on the HP-IB and checks that it is correct. Connect the HP-IB cable to the Signal Generator and run the program. If operation is normal, the controller display will contain "PASSED".
8. If the program is running for more than about 5 seconds on the HP 9825A or more than 20 seconds on the HP 85F, it is likely that the program is not reading data but is waiting because the Signal Generator is not "handshaking" properly. In this case the program will stay hung-up and the problem is most likely the HP-IB interface (A2A9U10) or transceiver (A2A9U22). Check the "handshaking" lines to find the cause.
9. If the data is read but is not correct, an error printout occurs. A sample error printout is shown in Figure 8-67. The 8 bit data bytes received are on the left and their decimal equivalent are on the right. The data goes from 0 to 255 and repeats. The controller starts reading anywhere in the cycle and reads 256 values. After reading all the values, the data is analyzed and data values near where the error was detected are printed. Analyzing the printout can often detect a bit stuck high or low. The sample printout in Figure 8-67 shows the DIO7 line stuck in the one state.

| ERROR | |
|---|---|
| BINARY | DECIMAL |
| 11111010 | 250 |
| 11111011 | 251 |
| 11111100 | 252 |
| 11111101 | 253 |
| 11111110 | 254 |
| 11111111 | 255 |
| 01000000 | 64 |
| 01000001 | 65 |
| 01000010 | 66 |
| 01000011 | 67 |
| 01000100 | 68 |

| ERROR | |
|---|---|
| BINARY | DECIMAL |
| (Cont'd) | (Cont'd) |
| 01000101 | 69 |
| 01000110 | 70 |
| 01000111 | 71 |
| 01001000 | 72 |
| 01001001 | 73 |
| 01001010 | 74 |
| 01001011 | 75 |
| 01001100 | 76 |
| 01001101 | 77 |
| 01001110 | 78 |

**Figure 8-67. Sample Error Printout**

### I/O Assembly (A2A7) Talk-Around Diagnostic

Signature analysis of the I/O Assembly (A2A7) is facilitated by the use of the special I/O extender (HP Part Number 11726-60004). In the diagnostic test, the special extender board substitutes signals that are normally output lines for input lines. Thus, the controller can verify both outputs and inputs are functional. If the special extender is available proceed to step 1, if not proceed to step 12.

1. Set the LINE switch to STBY and disconnect the power cord.
2. Install the I/O Assemby (A2A7) on the special I/O extender (HP Part Number 11726-60004). Set the talk-around switch (S2) on the extender to the TEST position. Set the Options Configuration Switches to the OFF position.
3. On the I/O Assembly, connect TP1 to TP2 and TP3 to TP4.
4. Install the MPU connector on top of A2A8 and a shorting clip between A2A8TP5 and TP GND.
5. Set diagnostic switch (A2A8S1) to 4.
6. Connect the power cord and set the LINE switch to ON. Verify the FREQUENCY MHz display indicates 04-1.
7. Remove shorting clip from A2A8TP5 and TP GND.



www.valuetronics.com

www.valuetronics.com



| DESCRIPTION | SAMPLE PROGRAMS | |
|---|---|---|
| | HP 9825A (HPL) | HP 85F (BASIC) |
| Reserve space in memory for arrays A and A$. Display "PROGRAM RUNNING" (BASIC only). | 0: dim A[300],A$[8];fxd 0 | 10 OPTION BASE 1<br>20 DIM A(300),A$[8]<br>25 DISP "PROGRAM RUNNING" |
| Reads 300 values from the HP-IB into array A. | 1: for I=1 to 300<br>2: rdb(700)→A[I]<br>3: next I | 30 FOR I=1 TO 300<br>40 ENTER 700 USING "#,B" ; A(I)<br>60 NEXT I |
| Display "ALMOST DONE" (BASIC only). Check that each reading increases by 1. When the reading is 0, the sequence starts over. | 4: for J=1 to 256<br>5: if A[J+1]=0;gto +2<br>6: if A[J]+1≠A[J+1];gto "error"<br>7: next J | 65 DISP "ALMOST DONE"<br>70 FOR J=1 TO 256<br>90 IF A(J+1)=0 THEN 110<br>100 IF A(J)+1<>A(J+1) THEN 140<br>110 NEXT J |
| Print or display "Passed" or "Error". | 8: prt "PASSED";stp<br>9: "error":<br>10: prt "ERROR" | 120 DISP "PASSED"<br>130 STOP<br>140 PRINT "ERROR" |
| If an error was detected, start printing 5 readings before the error occurred. | 11: J-5→K<br>12: if K<1;1→K | 150 K=J-5<br>160 IF K<1 THEN K=1 |
| Print 20 readings. | 13: for L=K to K+20 | 170 FOR L=K TO K+20 |
| Convert the numeric value of the reading to binary and store in string array A$. | 14: A[L]→V<br>15: for M=1 to 8<br>16: 2^(8-M)→B<br>17: "0"→A$[M,M]<br>18: if V>=B;"1"→A$[M,M];V-B→V<br>19: next M | 180 V=A(L)<br>190 FOR M=1 TO 8<br>200 B=2^(8-M)<br>210 A$[M,M]="0"<br>220 IF V<B THEN 250<br>230 A$[M,M]="1"<br>240 V=V-B<br>250 NEXT M |
| Print the reading in Binary (Array A$) and decimal form. | 20: prt A$,A[L]<br>21: next L | 260 PRINT A$,A(L)<br>270 NEXT L |
| | 22: stp | 280 END |

Figure 8-66. HP 9825A and HP 85F Sample Program Listing

**SERVICE SHEET BD8 (cont'd)**

8. Verify the FREQUENCY MHz display indicates 0400 (which means the diagnostic was run correctly). If 04 1, 04 2, or 04 3 is displayed, a malfunction has been detected. In either case, continue with step 9.

9. Set the LINE switch to STBY. Reconnect shorting clip to TP5 and TP GND. Set LINE switch to ON.

10. Touch the logic probe to +5V and verify signature is H6A6.

11. If 0400 was displayed in step 8, verify the Table 8-39. If these signatures are correct, the diagnostic signatures are complete with no malfunctions detected. If 04 1, 04 2, or 04 3 was displayed in step 8, refer to Table 8-40 to determine which group of lines is malfunctioning and the associated signatures. Table 8-41 can be used to isolate the source of the malfunction.

12. Set the LINE switch to STBY and disconnect the power cord.

13. Install the I/O Assembly (A2A7) on an extender.

14. Set the Options Configuration switches to the OFF position.

15. Install the MPU connector on top of A2A8 and a shorting clip between A2A8TP5 and TP GND.

16. Set the diagnostic switch (A2A8S1) to 4.

17. Connect the power cord and set the LINE switch to ON. Verify the FREQUENCY MHz display indicates 04-1.

18. Table 8-42 can be used to isolate the source of the malfunction. A recommended procedure is to first, verify the signatures at the edge connectors and second, locate the malfunction associated with the faulty line.

19. Disconnect the MPU test connector, the shorting clip, and the signature analyzer.

20. Restore the Options Configuration Switches to their proper positions for the instrument as shown below.

| Configuration | Switch Position |
|---|---|
| C | S1A, S1G, S1C closed |
| D | S1A, S1G, S1F closed |
| C, D Opt. 001, 005 | S1H, closed in addition |

**Table 8-39. Miscellaneous Signatures**

| PIN NO. | SIGNATURE | MNEMONIC |
|---|---|---|
| A2A7B 2 | 46F2 | BA0 |
| 5 | H6A6 | NSTRB |
| 20 | 12FF | BA2 |
| 22 | 0606 | BA3 |
| 23 | 4P43 | BA1 |
| A2A7C 12 | 4P53 | PEN LIFT |
| 13 | U4A1 | TRIGGER OUTPUT |
| 29 | 7058 | END SWP |

**Table 8-40. Error Codes and Associated Lines**

| PIN NO. | SIGNATURE | MNEMONIC |
|---|---|---|
| | **ERROR CODE 04 1** | |
| A2A7A 12 | P5AA | VUP |
| 14 | A3A3 | PWR PEAK |
| 15 | 2143 | DATA7 |
| 16 | 59AP | DATA5 |
| 17 | A3A3 | DATA3 |
| 18 | P5AA | DATA1 |
| 22 | 59AP | BIAS TRK |
| 33 | 0070 | DATA6 |
| 34 | 9142 | DATA4 |
| 35 | 91CU | DATA2 |
| 36 | 67FH | DATA0 |
| A2A7B 8 | 67FH | VDN |
| A2A7C 9 | PFC0 | VTI-L |
| | **ERROR CODE 04 2** | |
| A2A7C-14 | 91CU | STOP SWEEP |
| A2A7A 8 | P5AA | K0 |
| 9 | A3A3 | K2 |
| 10 | 59AP | K4 |
| 11 | 2143 | K6 |
| 13 | 67FH | KDN-L |
| 27 | 91CU | K1 |
| 28 | 9142 | K3 |
| 29 | 0070 | K5 |
| A2A7B 7 | 26H6 | IRQA-L |
| | **ERROR CODE 04 3** | |
| A2A7A 1 | P5AA | M/N |
| 2 | A3A3 | EXT REF |
| 7 | 59AP | LFS UNLOCK |
| 19 | 2143 | YTO UNLOCK |
| 20 | 67FH | REF UNLOCK |
| 31 | 91CU | LEV |
| 32 | 9142 | FM OM |



www.valuetronics.com

## SERVICE SHEET BD8 (cont'd)

**Table 8-41. I/O Assembly Diagnostic Signatures (with Special Extender Board)**

| PIN NO. | SIGNATURE | MNEMONIC |
|---|---|---|
| U1-1 | F09F | |
| 2 | 59AP | LFS UNLOCK |
| 3 | P5AA | M/N UNLOCK |
| 4 | 2143 | TP2 |
| 5 | 67FH | REF UNLOCK |
| 7 | 0000 | GND |
| 14 | H6A6 | +5V |
| | | |
| U2-1 | P604 | A3 |
| 2 | 5659 | |
| 3 | 1F3F | |
| 4 | 5659 | |
| 5 | P604 | A3 |
| 6 | CUPH | |
| 7 | 0000 | GND |
| 8 | 7653 | CB2 |
| | | |
| 10 | 8P87 | |
| 11 | AAA9 | |
| 12 | 1F3F | |
| 13 | 3485 | PRW |
| 14 | H6A6 | +5V |
| | | |
| U3-1 | 0000 | GND |
| 2 | 0000 | GND |
| 3 | AAA9 | |
| 5 | H6A6 | +5V |
| 6 | 8P87 | |
| 7 | 0000 | GND |
| 9 | H6A6 | +5V |
| 11 | 0000 | GND |
| 14 | H6A6 | +5V |
| | | |
| U4-1 | AAA9 | |
| 5 | 8P87 | |
| 7 | 0000 | GND |
| 8 | 3A16 | |
| 9 | P5AA | VUP |
| 10 | 67FH | VDN |
| 14 | H6A6 | +5V |
| | | |
| U5-1 | 75U2 | A$\phi$ |
| 2 | 224H | A1 |
| 3 | P198 | A2 |
| 4 | C380 | SA2-L |
| 5 | F9FU | SC2-L |
| 6 | H6A6 | +5V |
| 7 | 0A90 | 817 |

| PIN NO. | SIGNATURE | MNEMONIC |
|---|---|---|
| 8 | 0000 | GND |
| 9 | H6A6 | 816 |
| 13 | 7810 | 812 |
| 14 | PA05 | 811 |
| 15 | HP14 | 810 |
| 16 | H6A6 | +5V |
| | | |
| U6-1 | 0U42 | |
| 2 | H6A6 | +5V |
| 3 | P223 | E-PIA |
| 4 | 0000 | TP3 |
| 5 | H6A6 | |
| 7 | 0000 | GND |
| 9 | H6A6 | NSTRB |
| 10 | P91F | STRB DIS |
| 11 | P223 | E-PIA |
| 12 | H6A6 | |
| 13 | H6A6 | +5V |
| 14 | H6A6 | +5V |
| | | |
| U7-1 | 3485 | PRW |
| 2 | IC8F | |
| 3 | 09H6 | BD0 |
| 4 | F999 | BD1 |
| 5 | 8UUC | |
| 6 | 98U5 | |
| 7 | 36FF | BD2 |
| 8 | P3F5 | BD3 |
| 9 | 7058 | END SWP |
| | | |
| 10 | 0000 | GND |
| 11 | 7810 | 812 |
| 12 | U4A1 | |
| 13 | FF53 | BD4 |
| 14 | 74A7 | BD5 |
| 17 | PF4A | BD6 |
| 18 | F6UH | BD7 |
| 19 | 3UCA | |
| 20 | H6A6 | +5V |
| | | |
| U9-1 | 7F0U | |
| 2 | AAA9 | |
| 7 | 0000 | GND |
| 8 | 4719 | |
| 9 | 91CU | LEV |
| 12 | 163A | UNLOCK |
| 13 | F09F | |
| 14 | H6A6 | +5V |
| | | |
| U10-1 | 9142 | FM OM |



www.valuetronics.com

FIG. 8-222
SM 2 of 3

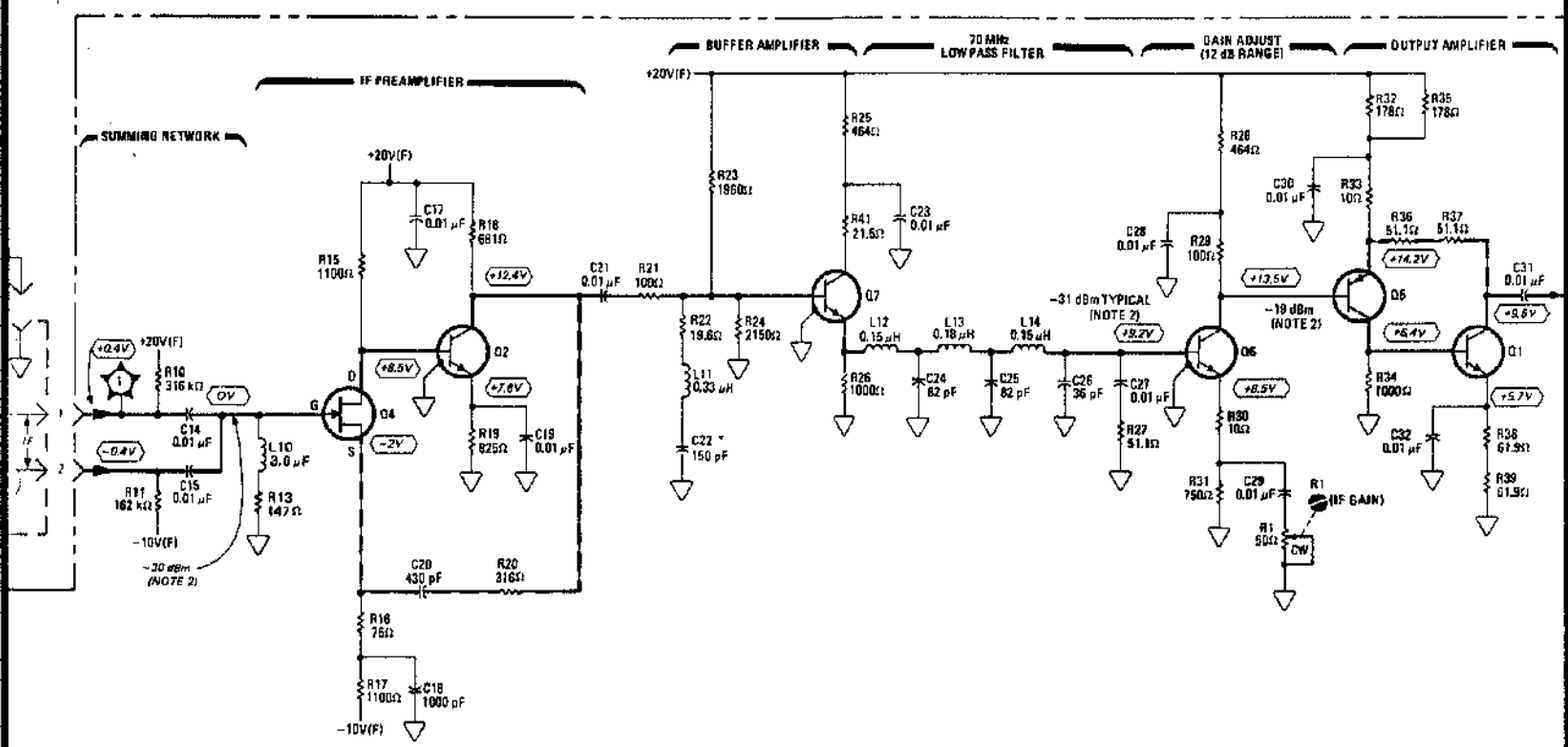


Reference designations within outline (— — —) assemblies are abbreviated. Full designation includes Assembly Number; e.g., R1 of Assembly A1 is A1R1. Designations of other components are complete as shown.

Figure 8-222. P/O YT

www.valuetronics.com

## SERVICE SHEET BD8 (cont'd)

**Table 8-41. I/O Assembly Diagnostic Signatures (with Special Extender Board) (cont'd)**

| PIN NO. | SIGNATURE | MNEMONIC |
|---|---|---|
| U14-1 | 0000 | |
| 2 | 0000 | GND |
| 3 | 0000 | |
| 4 | 25PF | |
| 5 | 3960 | |
| 6 | C172 | |
| 7 | P825 | |
| 8 | 9P79 | |
| 9 | 93FF | |
| 10 | 59CC | |
| 11 | 6677 | |
| 12 | 04U8 | |
| 13 | 85AA | |
| 14 | H6A6 | +5V |
| 15 | 0000 | GND |
| 16 | 0000 | |
| U15-2 | 09H6 | BD0 |
| 3 | PA05 | 811 |
| 5 | 3960 | |
| 7 | 0000 | GND |
| 9 | 25PF | |
| 11 | PA05 | 811 |
| 12 | F999 | BD1 |
| 14 | H6A6 | +5V |
| U16-2 | 4P43 | BA1 |
| 4 | 224H | A1 |
| 5 | 75U2 | A0 |
| 7 | 46F2 | BA0 |
| 8 | 0000 | GND |
| 9 | 0U42 | |
| 10 | 0606 | BA3 |
| 12 | P604 | A3 |
| 13 | P198 | A2 |
| 15 | 12FF | BA2 |
| 16 | H6A6 | |
| U19-1 | C380 | PB3 |
| 2 | 0000 | GND |
| 3 | H6A6 | +5V |
| 4 | 0000 | GND |
| 6 | 7F0U | |
| 8 | 0000 | GND |
| 9 | 970P | PB0 |
| 10 | H6A6 | PB4 |
| 11 | 0044 | PB1 |
| 12 | 06UU | PB5 |
| 13 | H6A6 | PB6 |
| 14 | HA30 | PB2 |
| 15 | 0000 | PB7 |
| 16 | H6A6 | +5V |
| U20-1 | 0A90 | 817 |
| 2 | 67FH | VDN |
| 3 | 09H6 | BD0 |
| 4 | P5AA | VUP |
| 5 | F999 | BD1 |
| 6 | 9142 | NO DISPLAY |
| 7 | 36FF | BD2 |
| 8 | 91CU | STOP SWEEP |
| 9 | P3F5 | BD3 |
| 10 | 0000 | GND |
| 11 | FF53 | BD4 |
| 12 | 59AP | BIAS TRK |
| 13 | 74A7 | BD5 |
| 14 | H6A6 | CB1 |
| 15 | PF4A | BD6 |
| 16 | 23FC | CB2 |
| 17 | F6UH | BD7 |
| 18 | A3A3 | PWR PK |
| 19 | 0A90 | 817 |
| 20 | H6A6 | +5V |
| U21-1 | 0000 | GND |
| 2 | 2143 | DATA 7 |
| 3 | F6UH | BD7 |
| 4 | PF4A | BD6 |
| 5 | 0070 | DATA 6 |
| 6 | 59AP | DATA 5 |
| 7 | 74A7 | BD5 |
| 8 | FF53 | BD4 |
| 9 | 9142 | DATA 4 |
| 10 | 0000 | GND |
| 11 | 0U42 | |
| 12 | 67FH | DATA 0 |
| 13 | 0946 | BD0 |
| 14 | F999 | BD1 |
| 15 | P5AA | DATA 1 |
| 16 | 91CU | DATA 2 |
| 17 | 36FF | BD2 |
| 18 | P3F5 | BD3 |
| 19 | A3A3 | DATA 3 |
| 20 | H6A6 | +5V |
| U22-1 | 0000 | GND |



www.valuetronics.com

## SERVICE SHEET BD8 (cont'd)

**Table 8-41. I/O Assembly Diagnostic Signatures (with Special Extender Board) (cont'd)**

| PIN NO. | SIGNATURE | MNEMONIC |
|---|---|---|
| U22-2 | 59CC | |
| 3 | P3F5 | BD3 |
| 4 | 36FF | BD2 |
| 5 | 6677 | |
| 6 | 04U8 | |
| 7 | F999 | BD1 |
| 8 | 09H6 | BD0 |
| 9 | 85AA | |
| 10 | 0000 | GND |
| 11 | HP14 | 810 |
| 12 | 93FF | |
| 13 | FF53 | BD4 |
| 14 | 74A7 | BD5 |
| 15 | 9P79 | |
| 16 | P825 | |
| 17 | PF4A | BD6 |
| 18 | F6UH | BD7 |
| 19 | C172 | |
| 20 | H6A6 | +5V |
| U24-1 | 0000 | GND |
| 2 | 0000 | GND |
| 3 | 3485 | PRW |
| 4 | 3485 | PRW |
| 5 | 3485 | PRW |
| 6 | H9P4 | |
| 7 | 0000 | GND |
| 8 | 0000 | |
| 9 | 1P3C | SC0-L |
| 10 | A453 | SC1-L |
| 11 | A453 | SC1-L |
| 12 | 0U42 | SB4-L |
| 13 | 0U42 | SB4-L |
| 14 | H6A6 | +5V |
| U25-1 | 80UU | SA3-L |
| 2 | 5659 | |
| 3 | 3UCA | |
| 4 | P91F | STRB DIS |
| 5 | H9P4 | |
| 6 | 0U42 | |
| 7 | 0000 | GND |
| 8 | PFCO | VTI-L |
| 9 | 3A16 | |
| 12 | 4P53 | PEN LIFT |
| 13 | 98U5 | |
| U25-14 | H6A6 | +5V |
| U26-2 | H6A6 | S1H |
| 3 | 09H6 | BD0 |
| 4 | H6A6 | S1F |
| 5 | F999 | BD1 |
| 6 | H6A6 | S1D |
| 7 | 36FF | BD2 |
| 8 | H6A6 | S1B |
| 9 | P3F5 | BD3 |
| 10 | 0000 | GND |
| 11 | FF53 | BD4 |
| 12 | H6A6 | S1A |
| 13 | 74A7 | BD5 |
| 14 | H6A6 | S1C |
| 15 | PF4A | BD6 |
| 16 | H6A6 | S1E |
| 17 | F6UH | BD7 |
| 18 | H6A6 | S1G |
| 19 | H6A6 | 816 |
| 20 | H6A6 | +5V |
| XA7A-1 | P5AA | UNLOCKED |
| 2 | A3A3 | EXT REF |
| | | OVEN |
| 4 | H6A6 | MONITOR |
| | | LFS |
| 7 | 59AP | UNLOCKED |
| 8 | P5AA | K0 |
| 9 | A3A3 | K2 |
| 10 | 59AP | K4 |
| 11 | 2143 | K6 |
| 12 | P5AA | VUP |
| 13 | 67FH | KDN-L |
| 14 | A3A3 | PWR PK |
| 15 | 2143 | DATA 7 |
| 16 | 59AP | DATA 5 |
| 17 | A3A3 | DATA 3 |
| 18 | P5AA | DATA 1 |
| 19 | 2143 | YTO |
| | | UNLOCKED |
| | | REF |
| 20 | 67FH | UNLOCKED |
| 21 | H6A6 | YTO RST |
| 22 | 59AP | BIAS TRK |
| 26 | 9638 | KACK-L |
| 27 | 91CU | K1 |
| 28 | 9142 | K3 |



www.valuetronics.com

## SERVICE SHEET BD8 (cont'd)

**Table 8-41. I/O Assembly Diagnostic Signatures (With Special Extender Board) (cont'd)**

| PIN NO. | SIGNATURE | MNEMONIC |
|---|---|---|
| XA7A-29 | 0070 | K5 |
| 30 | 0000 | BUFFERED YIG OUT |
| 31 | 91CU | LEV |
| 32 | 9142 | FM OM |
| 33 | 0070 | DATA 6 |
| 34 | 9142 | DATA 4 |
| 35 | 91CU | DATA 2 |
| 36 | 67FH | DATA 0 |
| XA7B-1 | H6A6 | +5V |
| 2 | 46F2 | BA0 |
| 3 | 0000 | GND |
| 4 | H6A6 | OVEN OK |
| 5 | H6A6 | NSTRB |
| 6 | 7568 | VMA |
| 7 | 26H6 | IRQA-L |
| 8 | 67FH | VDN |
| 10 | 0000 | GND |
| 12 | 224H | A1 |
| 15 | 80UU | SA3-L |
| 18 | P604 | A3 |
| 19 | H6A6 | +5V |
| 20 | 12FF | BA2 |
| 22 | 0606 | BA3 |
| 23 | 4P43 | BA1 |
| 24 | H6A6 | IRQB-L |
| 26 | H6A6 | RESET-L |
| 27 | 3485 | PRW |
| 28 | 0000 | GND |
| 29 | 75U2 | A0 |
| 30 | 1P3C | SC0-L |
| 32 | 0U42 | SB4-L |
| 33 | C380 | SA2-L |
| 35 | P198 | A2 |
| XA7C-2 | A453 | SC1-L |
| 4 | F9FU | SC2-L |
| 5 | F999 | BD1 |
| 7 | FF53 | BD4 |
| 8 | PF4A | BD6 |
| 9 | PFC0 | VTI-L |
| 12 | 4P53 | PEN LIFT TRIGGER |
| 13 | U4A1 | OUTPUT |
| XA7C-14 | 91CU | STOP SWEEP |
| 16 | 09H6 | BD0 |
| 19 | 36FF | BD2 |
| 20 | P223 | E-PIA |
| 21 | P3F5 | BD3 |
| 22 | 74A7 | BD5 |
| 23 | F6UH | BD7 |
| 25 | 9827 | SWP OUT |
| 29 | 7058 | END SWP |

**Table 8-42. I/O Assembly Diagnostic Signatures (Without Special Extender Board)**

| PIN NO. | SIGNATURE | MNEMONIC |
|---|---|---|
| U1-1 | 0000 | |
| 2 | H6A6 | LFS UNLOCKED |
| 3 | 0000 | M/N UNLOCKED |
| 4 | H6A6 | TP2 |
| 5 | 0000 | REF UNLOCKED |
| 7 | 0000 | GND |
| 14 | H6A6 | +5V |
| U2-1 | P604 | A3 |
| 2 | 5659 | |
| 3 | 1F3F | |
| 4 | 5659 | |
| 5 | P604 | A3 |
| 6 | CUPH | |
| 7 | 0000 | GND |
| 8 | 8U97 | CB2 |
| 9 | H6A6 | |
| 10 | 5931 | |
| 11 | 289U | |
| 12 | 1F3F | |
| 13 | 3485 | PRW |
| 14 | H6A6 | +5V |
| U3-1 | 0000 | GND |
| 2 | 0000 | GND |
| 3 | 289U | |
| 5 | H6A6 | +5V |
| 6 | 5931 | |
| 7 | 0000 | GND |
| 9 | H6A6 | +5V |



www.valuetronics.com

## SERVICE SHEET BD8 (cont'd)

**Table 8-42. I/O Assembly Diagnostic Signatures (Without Special Extender Board) (cont'd)**

| PIN NO. | SIGNATURE | MNEMONIC |
|---|---|---|
| U3-11 | 0000 | GND |
| 14 | H6A6 | +5V |
| U4-1 | 289U | |
| 7 | 0000 | GND |
| 8 | H6A6 | |
| 9 | 0000 | VUP |
| 10 | H6A6 | VDN |
| 14 | H6A6 | +5V |
| U5-1 | 75U2 | A0 |
| 2 | 224H | A1 |
| 3 | P198 | |
| 4 | C380 | SA2-L |
| 5 | F9FU | SC2-L |
| 6 | H6A6 | +5V |
| 7 | 0A90 | 817 |
| 8 | 0000 | GND |
| 9 | H6A6 | 816 |
| 13 | 7810 | 812 |
| 14 | PA05 | 811 |
| 15 | HP14 | 810 |
| 16 | H6A6 | +5V |
| U6-1 | 0U42 | |
| 2 | H6A6 | +5V |
| 3 | P223 | E-PIA |
| 4 | H6A6 | TP3 |
| 5 | 0U42 | |
| 6 | H9P4 | |
| 7 | 0000 | GND |
| 9 | H6A6 | NSTRB |
| 10 | H6A6 | STRB DIS |
| 11 | P223 | E-P1A |
| 12 | 0U42 | |
| 13 | H6A6 | +5V |
| 14 | H6A6 | +5V |
| U7-1 | 8485 | PRW |
| 2 | 1C8F | |
| 3 | U0U9 | BD0 |
| 4 | UP98 | BD1 |
| 5 | 8UUC | |
| 6 | 98U5 | |
| 8 | 43AA | BD3 |
| U7-9 | 7058 | END SWP |
| 10 | 0000 | GND |
| 11 | 7810 | 812 |
| 12 | 44A1 | TRIGGER OUTPUT |
| 13 | 8UP7 | BD4 |
| 14 | 0A71 | BD5 |
| 17 | 1A8A | BD6 |
| 19 | 3UCA | |
| 20 | H6A6 | +5V |
| U9-1 | UP39 | |
| 2 | 289U | |
| 7 | 0000 | GND |
| 8 | H6A6 | |
| 9 | 0000 | LEV |
| 12 | H6A6 | UNLOCK |
| 13 | 0000 | |
| 14 | H6A6 | +5V |
| U10-1 | 0000 | FM OM |
| 3 | 0000 | P82 |
| 4 | UNSTABLE | CB2 |
| 5 | H6A6 | PB0 |
| 7 | H6A6 | UNLOCK |
| 8 | 0000 | GND |
| 9 | H6A6 | |
| 11 | H6A6 | PB1 |
| 12 | UNSTABLE | CB2 |
| 13 | 0000 | P83 |
| 15 | 0000 | EXT REF |
| 16 | H6A6 | +5V |
| U11-1 | 0000 | GND |
| 2 | H6A6 | K0 |
| 3 | H6A6 | K1 |
| 4 | H6A6 | K2 |
| 5 | H6A6 | K3 |
| 6 | H6A6 | K4 |
| 7 | H6A6 | K5 |
| 8 | H6A6 | K6 |
| 9 | 0000 | GND |
| 10 | H6A6 | PB0 |
| 11 | H6A6 | PB1 |
| 12 | 0000 | PB2 |
| 13 | 0000 | PB3 |
| 14 | U004 | PB4 |
| 15 | 06UU | PB5 |



www.valuetronics.com

## SERVICE SHEET BD8 (cont'd)

**Table 8-42. I/O Assembly Diagnostic Signatures (Without Special Extender Board) (cont'd)**

| PIN NO. | SIGNATURE | MNEMONIC |
|---|---|---|
| U11-16 | 9HA2 | PB6 |
| 17 | 37P6 | PB7 |
| 18 | H6A6 | CB1 |
| 19 | UNSTABLE | CB2 |
| 20 | H6A6 | +5V |
| 21 | 3485 | PRW |
| 22 | 7568 | VMA |
| 23 | 80UU | SA3-L |
| 24 | P604 | A3 |
| 25 | P223 | E-PIA |
| 26 | 3CHH | D7 |
| 27 | H7A3 | D6 |
| 28 | A67U | D5 |
| 29 | 05H2 | D4 |
| 30 | UU91 | D4 |
| 31 | 13U5 | D2 |
| 33 | 144U | D0 |
| 34 | H6A6 | RESET-L |
| 35 | 224H | A1 |
| 36 | 75U2 | A0 |
| 37 | H6A6 | IRQB-L |
| 38 | H6A6 | IRQA-L |
| 39 | 9638 | KACK-L |
| 40 | H6A6 | KDN-L |
| U12-1 | CUPH | |
| 2 | U0U9 | BD0 |
| 3 | 144U | D0 |
| 4 | UP98 | BD1 |
| 5 | C670 | D1 |
| 7 | 13U5 | D2 |
| 8 | 43AA | BD3 |
| 9 | UU91 | D3 |
| 10 | 0000 | GND |
| 11 | 43AA | BD3 |
| 12 | UU91 | D3 |
| 14 | 13U5 | D2 |
| 15 | 22AP | BD1 |
| 16 | C670 | D1 |
| 17 | U0U9 | BD0 |
| 18 | 144U | D0 |
| 19 | 1F3F | |
| 20 | H6A6 | +5V |

| PIN NO. | SIGNATURE | MNEMONIC |
|---|---|---|
| U13-1 | CUPH | |
| 2 | 8UP7 | BD4 |
| 3 | 05H2 | D4 |
| 4 | 0A71 | BD5 |
| 5 | A67U | D5 |
| 6 | 1A8A | BD6 |
| 7 | H7A3 | D6 |
| 9 | 3CHH | D7 |
| 10 | 0000 | GND |
| 12 | 3CHH | D7 |
| 13 | 1A8A | BD6 |
| 14 | H7A3 | D6 |
| 15 | 0A71 | BD5 |
| 16 | A67U | D5 |
| 17 | 8UP7 | BD4 |
| 18 | 05H2 | D4 |
| 19 | 1F3F | |
| 20 | H6A6 | +5V |
| U14-1 | 0000 | |
| 2 | 0000 | GND |
| 3 | 0000 | |
| 4 | 25PF | |
| 5 | 3960 | |
| 6 | C172 | |
| 7 | P825 | |
| 8 | 9P79 | |
| 9 | 93FF | |
| 10 | 59CC | |
| 11 | 6677 | |
| 12 | 04U8 | |
| 13 | 85AA | |
| 14 | H6A6 | +5V |
| 15 | 0000 | GND |
| U15-2 | U0U9 | BD0 |
| 3 | PA05 | 811 |
| 5 | 3960 | |
| 7 | 0000 | GND |
| 9 | 25PF | |
| 11 | PA05 | 811 |
| 12 | 22AP | BD1 |
| 14 | H6A6 | +5V |
| U16-2 | 4P43 | BA1 |
| 4 | 224H | A1 |
| 5 | 75U2 | A0 |
| 7 | U6F2 | BA0 |



www.valuetronics.com

## SERVICE SHEET BD8 (cont'd)

**Table 8-42. I/O Assembly Diagnostic Signatures (Without Special Extender Board) (cont'd)**

| PIN NO. | SIGNATURE | MNEMONIC |
|---|---|---|
| U16-8 | 0000 | GND |
| 9 | 0U42 | |
| 10 | 0606 | BA3 |
| 12 | P604 | A3 |
| 13 | P198 | A2 |
| 15 | 12FF | BA2 |
| 16 | H6A6 | +5V |
| U19-1 | 0000 | PB3 |
| 2 | 0000 | GND |
| 3 | H6A6 | +5V |
| 4 | 0000 | GND |
| 6 | UP39 | |
| 8 | 0000 | GND |
| 9 | H6A6 | PB0 |
| 10 | U004 | PB4 |
| 11 | H6A6 | PB1 |
| 12 | 06UU | PB5 |
| 13 | 9HA2 | PB6 |
| 14 | 0000 | PB2 |
| 15 | 37PC | PB7 |
| 16 | H6A6 | +5V |
| U20-1 | 0A90 | 817 |
| 2 | H6A6 | VDN |
| 3 | U0U9 | BD0 |
| 4 | 0000 | VUP |
| 5 | 22AP | BD1 |
| 8 | H6A6 | STOP SWEEP |
| 9 | 43AA | BD3 |
| 10 | 0000 | GND |
| 11 | 8UP7 | BD4 |
| 12 | 0000 | BIAS TRK |
| 13 | 0A71 | BD5 |
| 14 | H6A6 | CB1 |
| 15 | 1A8A | BD6 |
| 16 | 8U97 | CB2 |
| 19 | 0A90 | 817 |
| 20 | H6A6 | +5V |
| U21-1 | 0000 | GND |
| 2 | 2143 | DATA 7 |
| 4 | 1A8A | BD6 |
| 5 | 0070 | DATA 6 |
| 6 | 59AP | DATA 5 |
| U21-7 | 0A71 | BD5 |
| 8 | 8UP7 | BD4 |
| 9 | 9142 | DATA 4 |
| 10 | 0000 | GND |
| 11 | 0U42 | |
| 12 | 67FH | DATA 0 |
| 13 | U0U9 | BD0 |
| 14 | 22AP | BD1 |
| 15 | P5AA | DATA 1 |
| 16 | 91CU | DATA 2 |
| 18 | 43AA | BD3 |
| 19 | A3A3 | DATA 3 |
| 20 | H6A6 | +5V |
| U22-1 | 0000 | GND |
| 2 | 59CC | |
| 3 | 43AA | BD3 |
| 5 | 6677 | |
| 6 | 04U8 | |
| 7 | 22AP | BD1 |
| 8 | U0U9 | BD0 |
| 9 | 85AA | |
| 10 | 0000 | GND |
| 11 | HP14 | 810 |
| 12 | 93FF | |
| 13 | 8UP7 | BD4 |
| 14 | 0A71 | BD5 |
| 15 | 9P79 | |
| 16 | P825 | |
| 17 | 1A8A | BD6 |
| 19 | C172 | |
| 20 | H6A6 | +5V |
| U24-1 | 0000 | GND |
| 2 | 0000 | GND |
| 3 | 3485 | PRW |
| 4 | 3485 | PRW |
| 5 | 3485 | PRW |
| 6 | H9P4 | |
| 7 | 0000 | GND |
| 8 | 0000 | |
| 9 | 1P3C | SC0-L |
| 10 | A453 | SC1-L |
| 11 | A453 | SC1-L |
| 12 | 0U42 | SB4-L |
| 13 | 0U42 | SB4-L |
| 14 | H6A6 | +5V |



www.valuetronics.com

## SERVICE SHEET BD8 (cont'd)

**Table 8-42. I/O Assembly Diagnostic Signatures (Without Special Extender Board) (cont'd)**

| PIN NO. | SIGNATURE | MNEMONIC |
|---|---|---|
| U26-1 | H6A6 | 816 |
| 2 | H6A6 | S1H |
| 3 | U0U9 | BD0 |
| 4 | H6A6 | S1F |
| 5 | 22AP | BD1 |
| 6 | H6A6 | S1D |
| 8 | H6A6 | S1B |
| 9 | 43AA | BD3 |
| 10 | 0000 | GND |
| 11 | 8UP7 | BD4 |
| 12 | H6A6 | S1A |
| 13 | 0A71 | BD5 |
| 14 | H6A6 | S1C |
| 15 | 1A8A | BD6 |
| 16 | H6A6 | S1E |
| 18 | H6A6 | S1G |
| 19 | H6A6 | 816 |
| 20 | H6A6 | +5V |
| XA7A-1 | 0000 | M/N UNLOCKED |
| 2 | 0000 | EXT REF OVEN |
| 4 | H6A6 | MONITOR LFS |
| 7 | H6A6 | UNLOCKED |
| 8 | H6A6 | K0 |
| 9 | H6A6 | K2 |
| 10 | H6A6 | K4 |
| 11 | H6A6 | K6 |
| 12 | 0000 | VUP |
| 13 | H6A6 | KDN-L |
| 15 | 2143 | DATA 7 |
| 16 | 59AP | DATA 5 |
| 17 | A3A3 | DATA 3 |
| 18 | P5AA | DATA 1 |
| 20 | 0000 | REF UNLOCKED |
| 22 | 0000 | BIAS TRK |
| 26 | 9638 | KACK-L |
| 27 | H6A6 | K1 |
| 28 | H6A6 | K3 |
| 29 | H6A6 | K4 |
| 30 | 0000 | BUFFERED YIG OUT |

| PIN NO. | SIGNATURE | MNEMONIC |
|---|---|---|
| XA7A-31 | 0000 | LEV |
| 32 | 0000 | FM OM |
| 33 | 0070 | DATA 6 |
| 34 | 9142 | DATA 4 |
| 35 | 91CU | DATA 2 |
| 36 | 67FH | DATA 0 |
| XA7B-1 | H6A6 | +5V |
| 2 | 46F2 | BA0 |
| 3 | 0000 | GND |
| 4 | H6A6 | OVEN OK |
| 5 | H6A6 | NSTRB |
| 6 | 7568 | VMA |
| 7 | H6A6 | IRQA-L |
| 8 | H6A6 | VDN |
| 10 | 0000 | GND |
| 12 | 224H | A1 |
| 15 | 80UU | SA3-L |
| 18 | P604 | A3 |
| 19 | H6A6 | +5V |
| 20 | 12FF | BA2 |
| 22 | 0606 | BA3 |
| 23 | 4P43 | BA1 |
| 24 | H6A6 | IRQB-L |
| 26 | H6A6 | RESET-L |
| 27 | 3485 | PRW |
| 28 | 0000 | GND |
| 29 | 75U2 | A0 |
| 30 | 1P3C | SC0-L |
| 31 | 0000 | SB4-L |
| 35 | P198 | A2 |
| XA7C-2 | A453 | SC1-L |
| 4 | F9FU | SC2-L |
| 5 | 22AP | BD1 |
| 7 | 8UP7 | BD4 |
| 8 | 1A8A | BD6 |
| 9 | 0000 | VTI-L |
| 12 | 4P53 | PEN LIFT TRIGGER |
| 13 | U4A1 | OUTPUT |
| 14 | H6A6 | STOP SWEEP |
| 16 | U0U9 | BD0 |
| 20 | P223 | E-PIA |
| 21 | H6A6 | BD3 |
| 22 | 0A71 | BD5 |
| 29 | 7058 | END SWP |



www.valuetronics.com

## SERVICE SHEET BD8 (cont'd)

Table 8-43. Key Code Patterns

| Function Key | Key-Code Pattern | | | | | | | Input Pair Verified | | IF Key-Code Pattern Incorrect | |
|---|---|---|---|---|---|---|---|---|---|---|---|
| | K6 | K5 | K4 | K3 | K2 | K1 | K0 | Row | Column | Key to be Depressed to Verify Row | Key to be Depressed to Verify Column |
| 1 | | L | L | | | | L | KR1 | C3L | 9 | 2 |
| ΔF | | L | L | L | | L | | KR2 | C3H | 2 | 9 |
| TUNE | L | | | | L | | | KR3 | C4L | 3 | LOCAL |
| ALC INT | L | | | L | | | | KR0 | C4H | 0 | RF ON/OFF |
| FREQ DECR | L | | L | | L | | | KR4 | C5L | 4 | START |
| PULSE OFF | L | | L | L | L | | L | KR5 | C5H | 5 | FM3 |
| FM3 | L | L | | | L | L | | KR6 | C66 | 6 | FM1 |
| SERVICE FUNC. | L | L | | L | L | L | L | KR7 | C6H | 7 | SINGLE |

### Key Code Assembly (A2A2) Checks

1. Set LINE switch to STBY.
2. Install the A2A2 Key-Code Assembly in the instrument.
3. Set LINE switch to ON.
4. Verify all seven LED on top of the Key-Code Assembly are lit when no front panel keys are pressed.
5. Depress the keys indicated in Table 8-43 and verify the LED pattern.
6. If a pattern of Step 5 cannot be verified, install the Key-Code Assembly on an extender card, replace in the instrument and check the appropriate input pair.
7. If, after the second key is depressed, no further keys when depressed will cause instrument changes, check to see that KACK-L at XA2-24 goes low after a key is depressed. If KACK-L does go low or is low after a key is depressed, there is a fault in the input to the Key Code Card. If KACK-L does not go low, then there is a fault in the I/O Assembly A2A7.

### A5 Microprocessor Board Diagnostic (A5A9)

This diagnostic verifies that the A5 Microprocessor board assembly is nominally working. The diagnostic tests can be performed with the board installed in the instrument or with the board removed from the instrument. If the board is left in the instrument, remove connectors J1 and J2 from the board. If the board is removed from the instrument, +5 Vdc must be supplied at TP9.

1. Connect the signature analyzer leads as follows:

   START — TP6
   STOP — TP6
   CLOCK — TP7
   GND — TP1

2. Set signatue analyzer as follows:

   START—OUT (positive edge)
   STOP—IN (negative edge)
   CLOCK—IN (negative edge)
   HOLD—OUT (not activated)
   SELF-TEST—OUT (not activated)

**NOTE**

*When taking signatures, it is possible to alter the diagnostic program by inadvertently shorting pins together with the probe. When this occurs, the pattern of the lighted LED will alter and the signature, obtained by touching the probe to +5V at TP9, will alter as well. Under these conditions, the system can be returned to normal by shorting TP1*



www.valuetronics.com

## SERVICE SHEET BD8 (cont'd)

### A5 Microprocessor Board Diagnostic (A5A9) (cont'd)

**NOTE (cont'd)**

*to TP2 momentarily. In the course of testing, whenever a false signature is obtained, the validity of the diagnostic program should be verified by shorting TP1 to TP2 momentarily.*

*When performing the Free Run Diagnostic Test, no visual indication in the LED lighted pattern or the +5V signature is given when the diagnostic program is altered.*

*It is necessary, therefore, to verify the diagnostic program by shorting TP1 to TP2 when false signatures are obtained. A consistent false signature is then an indication of a fault in the equipment.*

*When meaningful results to facilitate fault location cannot be obtained by running the first four diagnostic tests, the Free Run Diagnostic Test will assist in verifying that the microprocessor (U5) and the Programmed Array Logic (U7) are working properly.*

3. Connect jumper from TP1 to TP8.

4. Place Switch 1-1 in A position.

5. Momentarily short TP1 to TP2 and remove short.

6. The top LED should light and the bottom four LED should light sequentially. If one of the bottom four LED does not light, it indicates that ROM U16, U15, U14 or U13 is faulty if the top to the bottom LED does not light, respectively. Verify by proceeding to Processor Assisted Diagnostic Test below and performing signature analysis at the indicated ROM input and output leads as shown in Table 44.

#### RAM Test

7. Place Switch 1-1 in the B position and Switch 1-2 in the A position.

8. Momentarily short TP1 to TP2 and remove short.

9. The second LED and the bottom four LED should light; if not RAM U12 is faulty. Verify by proceeding to Processor Assisted Diagnostic Test below and performing signature analysis at the RAM input and output leads as shown in Table 44.

#### I/O Test (PIA U21)

10. Install extender cable 08673-60021 and test connector 08673-60123 in connector J2.

11. Place Switch 1-2 in the B position and Switch 1-3 in the A position.

12. Momentarily short TP2 to TP1 and remove the short.

13. The third LED and the bottom four LED should light; if the LED are not properly lit proceed to the Processor Assisted Diagnostic Test below and perform signature analysis at the input and output leads of U21 and the associated buffer leads as shown in Table 44.

#### Processor Assisted Diagnostic

14. Install the extender cable 08673-60021 and test connector 08673-60123 in J2.

15. Place switch S1-3 in the B position and switch S1-4 in the A position.

16. Momentarily short TP2 to TP1 and remove the short.

17. All LED should be lit.

18. If all LED are not lit, take the signatures indicated in Table 8-44 to locate faulty part. If the pattern of the LED being lit changes during this test, repeat Step 16 until the original pattern is restored.

#### Free Run Diagnostic

19. If the above listed tests do not yield meaningful results, perform the Free Run Diagnostic.

20. Remove the extender cable from J2.

21. Set all switches to the B position.

22. Install a jumper from TP1 to TP5 and TP8.

23. Take signatures at nodes indicated in Table 8-45.



www.valuetronics.com

## SERVICE SHEET BD8 (cont'd)

### Table 8-44. Processor Assisted Diagnostic Signatures

| PIN NO. | SIGNATURE | MNEMONIC |
|---|---|---|
| U3-2 | 0000 | |
| 3 | 9CAF | BA0 |
| 4 | 079U | |
| 5 | 38UA | BA1 |
| 6 | 079U | |
| 7 | 50P8 | BA2 |
| 8 | 1828 | |
| 9 | 1633 | BA3 |
| 10 | 0000 | |
| 11 | 1633 | A3 |
| 12 | 1828 | BR/NW |
| 13 | 50P8 | A2 |
| 14 | 079U | B02 |
| 15 | 38UA | A1 |
| 16 | 079U | NRESET |
| 17 | 9CAF | AD |
| 18 | 079U | RDY2 |
| 19 | 0000 | |
| 20 | 079U | |
| U4-1 | 0000 | |
| 2 | 0000 | |
| 3 | 079U | |
| 4 | 079U | B02 |
| 5 | 1828 | BR/NW |
| 6 | 1UC7 | |
| 7 | 1UC7 | |
| 7 | 0000 | |
| 8 | 1828 | |
| 9 | 1UC7 | |
| 10 | 079U | B02 |
| 11 | 0000 | |
| 12 | 079U | |
| 13 | 079U | |
| 14 | 079U | |
| U5-1 | 1UC7 | |
| 2 | 63F3 | D0 |
| 3 | C251 | D1 |
| 4 | 448F | D2 |
| 5 | 45HP | D3 |
| U5-6 | P0C3 | D4 |
| 7 | 7646 | D5 |
| 8 | 4H6C | D6 |
| 9 | 13H6 | D7 |
| U5-10 | 0000 | |
| 11 | 13H6 | BD7 |
| 12 | 4H6C | BD6 |
| 13 | 7646 | BD5 |
| 14 | F063 | BD4 |
| 15 | 45HP | BD3 |
| 16 | 448F | BD2 |
| 17 | C251 | BD1 |
| 18 | 63F3 | BD0 |
| 19 | 0000 | |
| 20 | 079U | |
| U6-1 | 0000 | GND |
| 2 | H33A | |
| 3 | 427C | BA5 |
| 4 | 1380 | A8 |
| 5 | 37C7 | BA6 |
| 7 | 079U | ACK 2 |
| 8 | F9PU | A4 |
| 10 | 0000 | GND |
| 11 | 079U | |
| 12 | F9PU | BA4 |
| 13 | 079U | |
| 14 | 079U | |
| 15 | 37C7 | A6 |
| 16 | 1380 | BA8 |
| 17 | 427C | A5 |
| 18 | H33A | RDY 2 |
| 19 | 0000 | |
| 20 | 079U | |
| U7-1 | 427C | BA5 |
| 2 | 37C7 | BA6 |
| 3 | H33A | BA7 |
| 4 | 1380 | BA8 |
| 5 | 3937 | BA9 |
| 6 | P5C8 | BA10 |
| 7 | 947U | BA11 |
| 8 | 967U | BA12 |
| 9 | U7F0 | BA13 |
| 10 | 2888 | BA14 |
| 11 | HH4C | BA15 |
| 12 | 0000 | |
| 13 | 2894 | BVMA |
| 14 | 1PF0 | NPGM |



www.valuetronics.com

## SERVICE SHEET BD8 (cont'd)

### Table 8-44. Processor Assisted Diagnostic Signatures (cont'd)

| PIN NO. | SIGNATURE | MNEMONIC |
|---|---|---|
| U7-15 | PFU7 | NRAM |
| 16 | 1159 | NLATCH |
| 17 | HH4P | NF0R1 |
| 18 | 079U | NF0R2 |
| 19 | C63A | NP1A1 |
| 20 | 079U | NPIA2 |
| 21 | 079U | NROMH |
| 22 | 079U | NDSAS |
| 23 | 079U | NSWITCH |
| 24 | 079U | |
| U8-1 | 0000 | |
| 2 | 079U | |
| 3 | 079U | |
| 4 | 079U | |
| 5 | 2894 | VMA |
| 6 | 079U | |
| 7 | 0000 | |
| 8 | 079U | |
| 9 | 9CAF | A6 |
| 10 | 38UA | A1 |
| 11 | 50P8 | A2 |
| 12 | 1633 | A3 |
| 13 | F9PU | A4 |
| 14 | 427C | A5 |
| 15 | 37C7 | A6 |
| 16 | H33A | A7 |
| 17 | 1380 | A8 |
| 18 | 3937 | A9 |
| 19 | P5C8 | A10 |
| 20 | 947U | A11 |
| 21 | 0000 | |
| 22 | 967U | A12 |
| 23 | U7F0 | A13 |
| 24 | 2888 | A14 |
| 25 | HH4C | A15 |
| 26 | 13H6 | D7 |
| 27 | 4H6C | D6 |
| 28 | 7646 | D5 |
| 29 | F0C3 | D4 |
| 30 | 45HP | D3 |
| 31 | 448F | D2 |
| 32 | C251 | D1 |
| 33 | 63F3 | D0 |
| U8-34 | 1828 | |
| 35 | 079U | |
| 36 | 079U | |
| 37 | 079U | |
| 38 | 0000 | |
| 39 | 079U | |
| 40 | 079U | |
| U9-1 | 0000 | |
| 2 | P5C8 | A10 |
| 3 | 3937 | BA9 |
| 4 | 967U | A12 |
| 5 | 947U | BA11 |
| 6 | 2888 | A14 |
| 7 | U7F0 | BA13 |
| 8 | 2894 | VMA |
| 9 | HH4C | BA15 |
| 10 | 0000 | |
| 11 | HH4C | A15 |
| 12 | 2894 | BVMA |
| 13 | U7F0 | A13 |
| 14 | 2888 | BA14 |
| 15 | 947U | A11 |
| 16 | 967U | BA12 |
| 17 | 3937 | A9 |
| 18 | P5C8 | BA10 |
| 19 | 0000 | |
| 20 | 079U | |
| U10-1 | 1828 | BR/NW |
| 2 | 0000 | |
| 3 | 1828 | |
| 4 | 0000 | UNLATCH |
| 5 | 1159 | NLATCH |
| 6 | 1159 | |
| 7 | 0000 | |
| 8 | 1159 | NSTRE |
| 9 | 1159 | |
| 10 | 1828 | |
| 11 | 079U | |
| 12 | 079U | |
| 13 | 079U | |
| 14 | 079U | |
| U11-1 | 1828 | |



www.valuetronics.com

## SERVICE SHEET BD8 (cont'd)

**Table 8-44. Processor Assisted Diagnostic Signatures (cont'd)**

| PIN NO. | SIGNATURE | MNEMONIC |
|---|---|---|
| U11-2 | 1UC7 | |
| 3 | 079U | B02 |
| 4 | 0000 | |
| U12-1 | H33A | BAT |
| 2 | 37C7 | BA6 |
| 3 | 427C | BA5 |
| 4 | F9PU | BA4 |
| 5 | 1633 | BA3 |
| 6 | 50P8 | BA2 |
| 7 | 38UA | BA1 |
| 8 | 9CAF | BA0 |
| 9 | 63F3 | BD0 |
| 10 | C251 | BD1 |
| 11 | 448F | BD2 |
| 12 | 0000 | |
| 13 | 45HP | BD3 |
| 14 | F0C3 | BD4 |
| 15 | 7646 | BD5 |
| 16 | 4H6C | BD6 |
| 17 | 13H6 | BD7 |
| 18 | PFU7 | NRAM |
| 19 | P5C8 | BA10 |
| 20 | 1UC7 | |
| 21 | 1828 | |
| 22 | 3937 | BA9 |
| 23 | 1380 | BA8 |
| 24 | 079U | |
| U13-18 | 079U | NROMH |
| U14-20 | 079U | NFOR2 |
| U15-20 | HH4P | NFOR1 |
| U16-20 | 1PF0 | NPGM |
| 18-1 | 0000 | |
| 2 | C348 | PB0 |
| 3 | 8FH9 | DATA 1 |
| 4 | 74CC | PB5 |
| 5 | 1529 | DATA 2 |
| 6 | F7AC | PB6 |
| 7 | A109 | DATA 3 |
| 8 | UHP1 | PB7 |
| 9 | CHU4 | DATA 4 |
| 10 | 0000 | |
| 11 | CHU4 | PB4 |
| 12 | UHP1 | DATA 7 |
| 13 | A109 | PB3 |
| 14 | F7AC | DATA 6 |
| 15 | 1529 | PB2 |
| 16 | 74CC | DATA 5 |
| 17 | 8FH9 | PB1 |
| 18 | C848 | DATA 0 |
| 19 | 0000 | |
| 20 | 079U | |
| U20-1 | 0000 | |
| 2 | 079U | PA0 |
| 3 | 079U | PA1 |
| 4 | 079U | PA2 |
| 5 | 079U | PA3 |
| 6 | 079U | PA4 |
| 7 | 079U | PA5 |
| 8 | 0000 | PA6 |
| 9 | 0000 | PA7 |
| 10 | C348 | PB0 |
| 11 | 8FH9 | PB1 |
| 12 | 1529 | PB2 |
| 13 | A109 | PB3 |
| 14 | CHU4 | PB4 |
| 15 | 74CC | PB5 |
| 16 | F7AC | PB6 |
| 17 | UHP1 | PB7 |
| 18 | 0000 | |
| 19 | 0000 | |
| 20 | 079U | |
| 21 | 1828 | BR/NW |
| 22 | 1633 | BA3 |
| 23 | C63A | NPIA1 |
| 24 | F9PU | BA4 |
| 25 | 079U | B02 |
| 26 | 13H6 | BD7 |
| 27 | 4H6C | BD6 |
| 28 | 7646 | BD5 |
| 28 | F9C3 | BD4 |
| 29 | F0C3 | BD4 |
| 30 | 45HP | BD3 |
| 31 | 448F | BD2 |
| 32 | C251 | BD1 |
| 33 | 63F3 | BD0 |
| 34 | 079U | NRESET |



www.valuetronics.com

## SERVICE SHEET BD8 (cont'd)

**Table 8-44. Processor Assisted Diagnostic Signatures (cont'd)**

| PIN NO. | SIGNATURE | MNEMONIC |
|---|---|---|
| U20-35 | 38UA | BA1 |
| 36 | 9CAF | |
| 37 | 079U | |
| 39 | 079U | |
| 40 | 079U | |
| U21-21 | 1828 | BR/NW |
| 22 | 1633 | BA3 |
| 23 | 079U | NPIA2 |
| 24 | F9PU | BA4 |
| 25 | 079U | B02 |
| 26 | 13U6 | BD7 |
| 27 | 4H6C | BD6 |
| 28 | 7646 | BD5 |
| 29 | F0C3 | BD4 |
| 30 | 45HP | BD3 |
| 31 | 448F | BD2 |
| 32 | C251 | BD1 |
| 33 | 63F3 | BD0 |
| 34 | 079U | NRESET |
| 35 | 38UA | BA1 |
| 36 | 9CAF | BA0 |
| 37 | 079U | |
| 38 | 079U | |
| 39 | 079U | |
| 40 | 079U | RDY1 |

**Table 8-45. Freerun Diagnostic Signatures**

| PIN NO. | SIGNATURE | MNEMONIC |
|---|---|---|
| U3-3 | 8F29 | BA0 |
| 4 | CF8H | — |
| 5 | 83U7 | BA1 |
| 6 | CF8H | — |
| 7 | H569 | BA2 |
| 8 | CF8H | — |
| 9 | 5782 | BA3 |
| 10 | 0000 | — |
| 11 | 5782 | A3 |
| 12 | CF8H | BR/NW |
| 13 | H569 | A2 |
| 14 | CF8H | B02 |
| 15 | 83U7 | A1 |
| 16 | CF8H | NRESET |

**Table 8-45. Freerun Diagnostic Signatures (cont'd)**

| PIN NO. | SIGNATURE | MNEMONIC |
|---|---|---|
| U-17 | 8529 | A0 |
| 18 | CF8H | RDY2 |
| 19 | 0000 | — |
| 20 | CF8H | — |
| 19 | CF8H | — |
| 20 | CF8H | — |
| U6-1 | 0000 | — |
| 2 | C1P7 | A7 |
| 3 | CUHC | BA5 |
| 4 | A1H1 | A8 |
| 5 | 4882 | BA6 |
| 6 | CF8H | — |
| 7 | CF8H | ACK2 |
| 8 | 436A | A4 |
| 9 | CF8H | — |
| 10 | 0000 | — |
| 11 | 0000 | — |
| 12 | 436A | BA4 |
| 13 | CF8H | — |
| 14 | CF8H | — |
| 15 | 4882 | A6 |
| 16 | A1H1 | BA8 |
| 17 | CUHC | A5 |
| 18 | C1P7 | BA7 |
| 19 | 0000 | — |
| 20 | CF8H | — |
| U7-1 | CUHC | BA5 |
| 2 | 4882 | BA6 |
| 3 | C1P7 | BA7 |
| 4 | A1H1 | BA8 |
| 5 | 281C | BA9 |
| 6 | 74AH | BA10 |
| 7 | 52U7 | BA11 |
| 8 | 8378 | BA12 |
| 9 | 92CC | BA13 |
| 10 | 67A2 | BA14 |
| 11 | 5P46 | BA15 |
| 12 | 0000 | |
| U7-13 | CF8H | BVMA |
| 14 | 024U | NPGM |
| 15 | 013U | NRAM |
| 16 | A66P | NLATCH |
| 17 | 63PF | NF0R1 |
| 18 | 30P4 | NF0R2 |
| 19 | PH6F | NP1A1 |



www.valuetronics.com

## SERVICE SHEET BD8 (cont'd)

Table 8-45. Freerun Diagnostic Signatures (cont'd)

| PIN NO. | SIGNATURE | MNEMONIC |
|---|---|---|
| U7-20 | 328A | NPIA2 |
| 21 | 4H77 | NROMH |
| 22 | CF8H | NDSAS |
| 23 | H9A7 | NSWITCH |
| 24 | CF8H | — |
| U8-9 | 8F29 | A0 |
| 10 | 83U7 | A1 |
| 11 | H569 | A2 |
| 12 | 5782 | A3 |
| 13 | 436A | A4 |
| 14 | CUHC | A5 |
| 15 | 4882 | A6 |
| 16 | C1P7 | A7 |
| 17 | A1H1 | A8 |
| 18 | 281C | A9 |
| 19 | 74AH | A10 |
| 20 | 52U7 | A11 |
| 21 | 0000 | - |
| 22 | 8378 | A12 |
| 23 | 92CC | A13 |
| 24 | 67A2 | A14 |
| 25 | 5P46 | A15 |
| U9-1 | 0000 | — |
| 2 | 74AH | A10 |
| 3 | 281C | BA9 |
| 4 | 8378 | A12 |
| 5 | 52U7 | BA11 |
| 6 | 67A2 | A14 |
| 7 | 92CC | BA12 |
| 8 | CF8H | VMA |
| 9 | 5P46 | BA15 |
| 10 | 0000 | — |
| 11 | 5P46 | A15 |
| 12 | CF8H | BVMA |
| 13 | 92CC | A13 |
| 14 | 67A2 | BA14 |
| 15 | 52U7 | A11 |
| 16 | 8378 | BA12 |
| 17 | 281C | A9 |
| 18 | 74AH | BA10 |
| 19 | 0000 | — |
| 20 | CF8H | — |

| PIN NO. | SIGNATURE | MNEMONIC |
|---|---|---|
| U10-5 | A66P | NLATCH |
| U12-1 | C1P7 | BA7 |
| 2 | 4882 | BA6 |
| 3 | CUHC | BA5 |
| 4 | 436A | BA4 |
| 5 | 5782 | BA3 |
| 6 | H569 | BA2 |
| 7 | 83U7 | BA1 |
| 8 | 8F29 | BA0 |
| 9 | A9FH | BD0 |
| 10 | 2827 | BD1 |
| 11 | U2P6 | BD2 |
| 12 | 0000 | — |
| 18 | 013U | NRAM |
| 19 | 74AH | BA10 |
| 20 | 0000 | — |
| 21 | CF8H | — |
| 22 | 281C | BA9 |
| 23 | A1H1 | BA8 |
| 24 | CF8H | — |
| U13-1 | C1P7 | BA7 |
| 2 | 4882 | BA6 |
| 3 | CUHC | BA5 |
| 4 | 436A | BA4 |
| 5 | 5782 | BA3 |
| 6 | H569 | BA2 |
| 7 | 83U7 | BA1 |
| 8 | 8F29 | BA0 |
| 12 | 0000 | — |
| 18 | 4H77 | NROMH |
| 19 | 74AH | BA10 |
| 20 | 0000 | — |
| 21 | CF8H | — |
| 22 | 281C | BA9 |
| 23 | A1H1 | BA8 |
| 24 | CF8H | — |
| U14-1 | CF8H | — |
| 2 | 8378 | BA12 |
| 3 | C1P7 | BA7 |
| 4 | 4882 | BA6 |
| 5 | CUHC | BA5 |
| 6 | 436A | BA4 |
| 7 | 5782 | BA3 |
| 8 | H569 | BA2 |
| 9 | 83U7 | BA1 |



www.valuetronics.com

## SERVICE SHEET BD8 (cont'd)

Table 8-45. Freerun Diagnostic Signatures (cont'd)

| PIN NO. | SIGNATURE | MNEMONIC |
|---|---|---|
| 10 | 8F29 | BA0 |
| 11 | A9FH | BD0 |
| 20 | 30P4 | NFDR2 |
| 21 | 74AH | BA10 |
| 22 | 0000 | — |
| 23 | 52U7 | BA11 |
| 24 | 281C | BA9 |
| 25 | A1H1 | BA8 |
| 26 | CF8H | — |
| 27 | CF8H | — |
| 28 | CF8H | — |
| U15-1 | CF8H | — |
| 2 | 8378 | BA12 |
| 3 | C1P7 | BA7 |
| 4 | 4882 | BA6 |
| 5 | CUHC | BA5 |
| 6 | 436A | BA4 |
| 7 | 5782 | BA3 |
| 8 | H569 | BA2 |
| 9 | 83U7 | BA1 |
| 10 | 8F29 | BA0 |
| 14 | 0000 | |
| 20 | 63PF | NF0R2 |
| 21 | 74AH | BA10 |
| 22 | 0000 | — |
| 23 | 52U7 | BA11 |
| 24 | 281C | BA9 |
| 25 | A1H1 | BA8 |
| 26 | CF8H | — |
| 27 | CF8H | — |
| 28 | CF8H | — |
| U16-1 | CF8H | — |
| 2 | 8378 | BA12 |
| 3 | C1P7 | BA7 |
| 4 | 4882 | BA6 |
| 5 | CUHC | BA5 |
| 6 | 436A | BA4 |
| 7 | 5782 | BA3 |
| 8 | H569 | BA2 |
| 9 | 83U7 | BA1 |
| 10 | 8F29 | BA0 |
| 14 | 0000 | — |
| 20 | 024U | NPGM |
| U16-21 | 74AH | BA10 |
| 22 | 0000 | — |
| 23 | 52U7 | BA11 |
| 24 | 281C | BA9 |
| 25 | A1H1 | — |
| 26 | CF8H | — |
| 27 | CF8H | — |
| 28 | CF8H | — |
| U20-21 | CF8H | BR/NN |
| 22 | 5782 | BA3 |
| 23 | PH6F | NPIA2 |
| 24 | 436A | BA4 |
| 25 | CF8H | B02 |
| 34 | CF8H | NRESET |
| 35 | 83U7 | BA1 |
| 36 | 8F29 | BA0 |
| 37 | CF8H | — |
| U21-21 | CF8H | BR/NW |
| 22 | 5782 | BA3 |
| 23 | 328A | NPIA2 |
| 24 | 436A | BA4 |
| 25 | CF8H | B02 |
| 34 | CF8H | NRESET |
| 35 | 83U7 | BA1 |
| 36 | 8F29 | BA0 |
| 37 | CF8H | — |

## DAC AND ENABLE ASSEMBLY (A1A5)

This test verifies performance of the digital portions of the DAC and Enable Board Assembly. The three DAC on the board are programmed in ramps covering their full output range. An oscilloscope can be used to verify monotonicity and adjustment of their output voltages.

1. Set the line switch to standby and disconnect the power cord.
2. Set Diagnostic Switch (A2A8S1) to position 5.
3. Connect the MPU connector (HP Part No. 11726-60001) to the test connectors on top of the A2A8 assembly.
4. Install a shorting clip between A2A8TP5 and the adjacent TP GND.



www.valuetronics.com

## SERVICE SHEET BD8 (cont'd)

## DAC AND ENABLE ASSEMBLY (A1A5) (cont'd)

6. Connect the signature analyzer as follows:

| Signature Analyzer Timing Pod | A2A8 Microprocessor |
|---|---|
| START | TP4 |
| STOP | TP4 |
| CLOCK | TP3 |
| GND | TP GND |

6. Set the signature analyzer pushbuttons as follows:

   START—OUT (positive edge)
   STOP—IN (negative edge)
   CLOCK—IN (negative edge)
   HOLD—OUT (not activated)
   SELF-TEST—OUT (not activated)

7. Install power cord and set line switch to ON.

8. Verify the FREQUENCY MHz display indicates 05-1.

9. Touch the signature probe to +5V and verify the signature is C37F.

10. Table 46 lists the signatures for the DAC and Enable Board Assembly.

**Table 8-46. DAC and Enable Diagnostic Signatures**

| PIN NO. | SIGNATURE | MNEMONIC |
|---|---|---|
| U1-1 | 0000 | GND |
| 2 | 8958 | DATA 0 |
| 3 | U194 | DATA 1 |
| 4 | 9F1C | DATA 2 |
| 5 | 39P1 | DATA 3 |
| 6 | H551 | DATA 4 |
| 7 | 6H90 | DATA 5 |
| 8 | 71A2 | DATA 6 |
| 9 | 8F48 | DATA 7 |
| 10 | 8958 | DATA 0 |
| 11 | U194 | DATA 1 |
| 12 | 2079 | NEN12 |
| 13 | A90C | NEN13 |
| 14 | C37F | |
| 15 | C37F | |
| 16 | 0000 | GND |
| 17 | C37F | |
| U1-19 | 0000 | −15V |
| 20 | 5P61 | |
| 21 | C37F | +5V |
| 22 | 0000 | |
| 23 | 0000 | |
| 24 | 0000 | GND |
| U2-1 | 0000 | GND |
| 2 | 8958 | DATA 0 |
| 3 | U194 | DATA 1 |
| 4 | 9F1C | DATA 2 |
| 5 | 39P1 | DATA 3 |
| 6 | H551 | DATA 4 |
| 7 | 6H90 | DATA 5 |
| 8 | 71A2 | DATA 6 |
| 9 | 8F48 | DATA 7 |
| 10 | 1603 | NEN10 |
| 12 | C37F | |
| 13 | C37F | |
| 14 | C37F | |
| 15 | 0000 | |
| 16 | 0000 | |
| 17 | 0000 | −15V |
| 18 | UNSTABLE | PK DAC |
| 19 | C37F | +15V |
| 20 | 0000 | |
| 21 | 0000 | |
| 22 | 0000 | GND |
| U3-1 | 8958 | DATA 0 |
| 2 | 075P | LOCAL |
| 3 | C422 | REMOTE |
| 4 | HA66 | EN11 |
| 5 | 9A20 | FM40 |
| 7 | U194 | DATA 1 |
| 8 | 0000 | GND |
| 9 | 9F1C | DATA 2 |
| 11 | A7PC | |
| 12 | HA66 | EN11 |
| 14 | 40U2 | NSHDN |
| 15 | 39P1 | DATA 3 |
| 16 | C37F | +5V |
| U4-1 | 0000 | GND |
| 2 | 8958 | DATA 0 |
| 3 | U194 | DATA 1 |
| 4 | 9F1C | DATA 2 |



www.valuetronics.com

## SERVICE SHEET BD8 (cont'd)

**Table 8-45. DAC and Enable Diagnostic Signatures (cont'd)**

| PIN NO. | SIGNATURE | MNEMONIC |
|---|---|---|
| U4-5 | 39P1 | DATA 3 |
| 6 | H551 | DATA 4 |
| 7 | 6H90 | DATA 5 |
| 8 | 71A2 | DATA 6 |
| 9 | 8F48 | DATA 7 |
| 10 | U2FP | NEN9 |
| 12 | 0000 | |
| 13 | C37F | +5V REF |
| 14 | C375 | +5V REF |
| 16 | 0000 | |
| 17 | 0000 | −15V |
| 18 | 252P | TP8 |
| 19 | C37F | +15V |
| 20 | 0000 | |
| 21 | 0000 | |
| 22 | 0000 | GND |
| U8-1 | 1641 | NEN1 |
| 2 | AC53 | NEN2 |
| 3 | 3065 | NEN3 |
| 4 | U867 | NEN4 |
| 5 | CAFA | NEN5 |
| 6 | 8C64 | NEN6 |
| 7 | A5CU | NEN7 |
| 8 | 802P | NEN8 |
| 9 | U2FP | NEN9 |
| 10 | 1603 | NEN10 |
| 11 | 691A | NEN11 |
| 12 | 0000 | GND |
| 13 | 2079 | NEN12 |
| 14 | A90C | NEN13 |
| 18 | 658A | NSTRB |
| 19 | 0000 | GND |
| 20 | 1H0F | BA3 |
| 21 | PAH6 | BA2 |
| 22 | PU34 | BA1 |
| 23 | 1PP5 | BA0 |
| 24 | C37F | +5V |
| U9-1 | 0000 | GND |
| 2 | 1641 | NEN1 |
| 3 | 182U | EN2 |
| 4 | 3065 | NEN3 |
| 5 | 4C1C | EN4 |
| 6 | CAFA | NEN5 |
| 7 | 3818 | EN6 |
| 8 | A5CU | NEN7 |
| 9 | 3352 | EN8 |
| 10 | 0000 | GND |
| 11 | 802P | NEN8 |
| 12 | 16F3 | EN7 |
| 13 | 8C64 | NEN6 |
| 14 | 09C6 | EN5 |
| 15 | U867 | NEN4 |
| 16 | 8319 | EN3 |
| 17 | AC53 | NEN2 |
| 18 | A53H | EN1 |
| 19 | 0000 | GND |
| 20 | C37F | +5V |
| U12-1 | P281 | |
| 2 | C422 | REMOTE |
| 5 | C422 | REMOTE |
| 7 | 0000 | GND |
| 8 | C37F | |
| 9 | C37F | |
| 10 | C37F | |
| 11 | C37F | |
| 12 | C37F | |
| 13 | C37F | |
| 14 | C37F | +5V |
| XA5-1 | 0000 | GND |
| 2 | C37F | +5V |
| 6 | 0000 | GND |
| 7 | 9A20 | FM40 |
| 8 | C37F | PWR UP |
| 9 | 0000 | ALC REF |
| 10 | 0000 | ALC REF GND |
| 11 | A53H | EN1 |
| 12 | 182U | EN2 |
| 13 | 8319 | EN3 |
| 14 | 4C1C | EN4 |
| 15 | 09C6 | EN% |
| 16 | 3818 | EN6 |
| 17 | 16F3 | EN7 |
| 18 | 3352 | EN8 |
| 19 | 0000 | B1A51 |
| 20 | 40U2 | NSHDN |
| 22 | C37F | +5V REF |
| 23 | 0000 | GND |
| 24 | C37F | +5V |



www.valuetronics.com

## SERVICE SHEET BD8 (cont'd)

Table 8-45. DAC and Enable Diagnostic Signatures (cont'd)

| PIN NO. | SIGNATURE | MNEMONIC |
|---|---|---|
| XA5-28 | 658A | NSTRB |
| 29 | 1PP5 | BA0 |
| 30 | PU34 | BA1 |
| 31 | PAH6 | BA2 |
| 32 | 1H0F | BA3 |
| 33 | H9CF | RF ON |
| 35 | 8958 | DATA 0 |
| 36 | U194 | DATA 1 |
| 37 | 951C | DATA 2 |
| 38 | 39P1 | DATA 3 |
| 39 | H551 | DATA 4 |
| 40 | 6H90 | DATA 5 |
| 41 | 71A2 | DATA 6 |
| 42 | 8F48 | DATA 7 |
| 43 | 910U | BIAS 2 |



www.valuetronics.com

FIG. 8-69
Sht 1 of 3

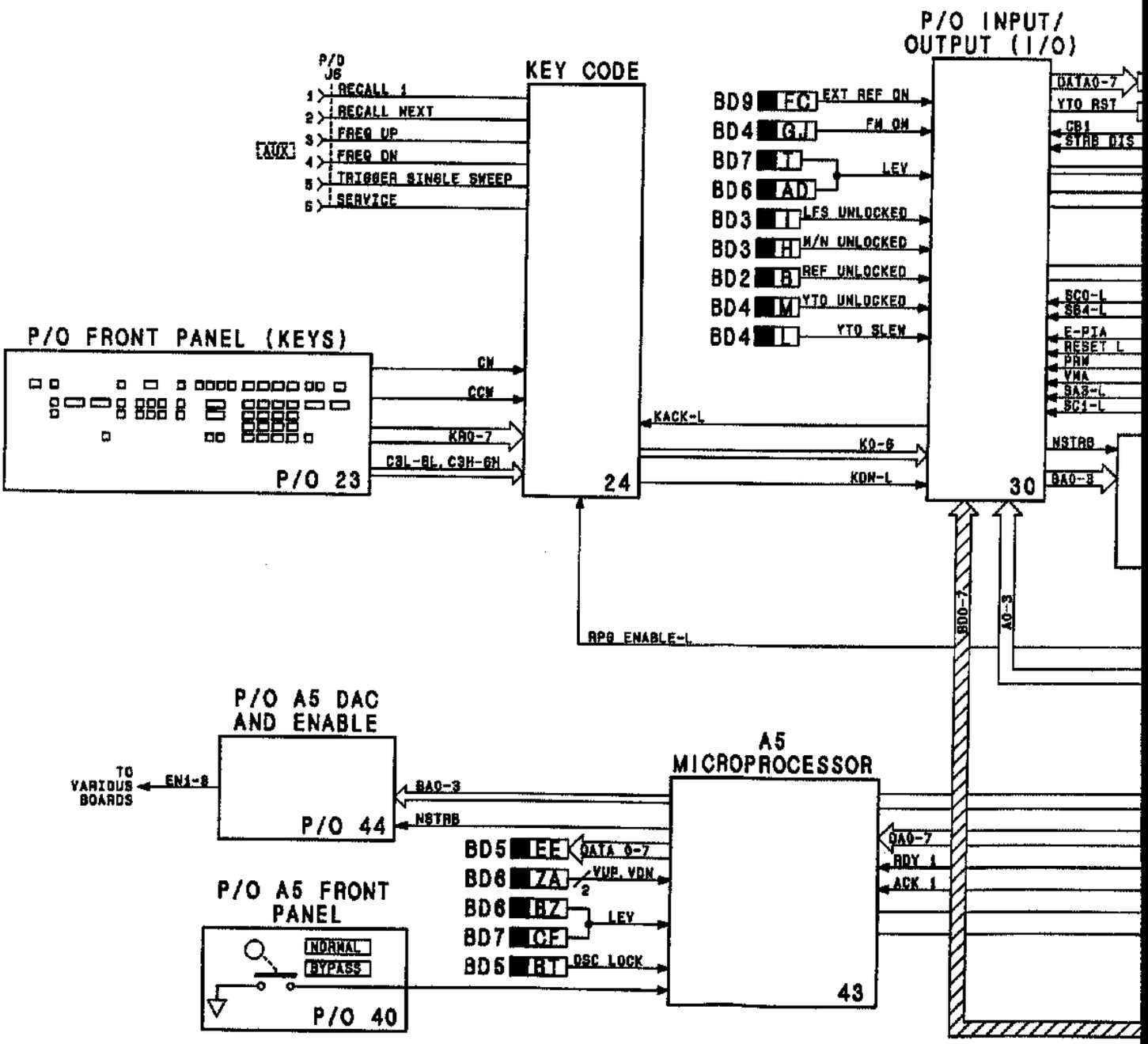


www.valuetronics.com

FIG. 8-69
Sht 2 of 3

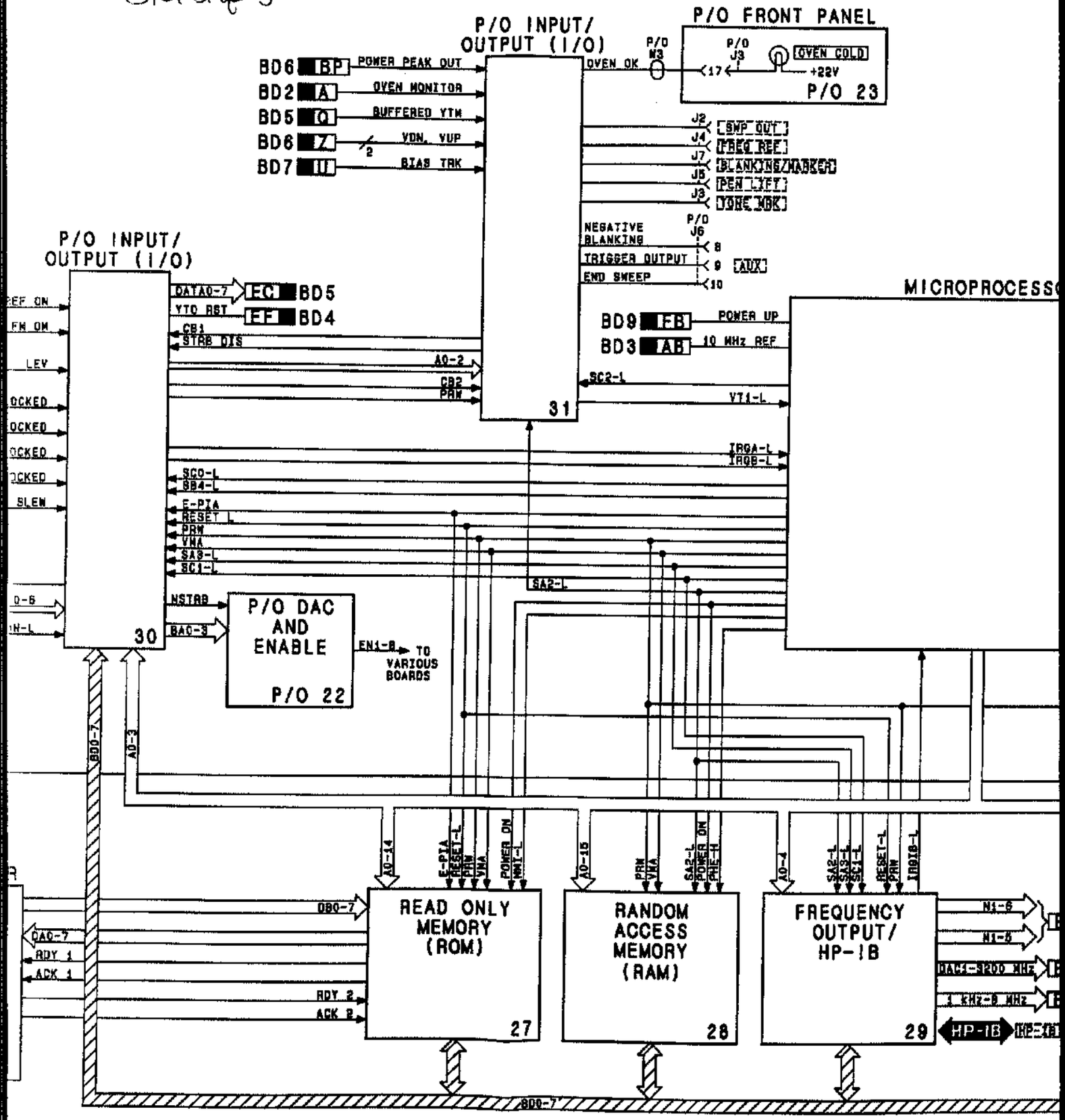


www.valuetronics.com

FIG. 8-69
Sht 3 of 3

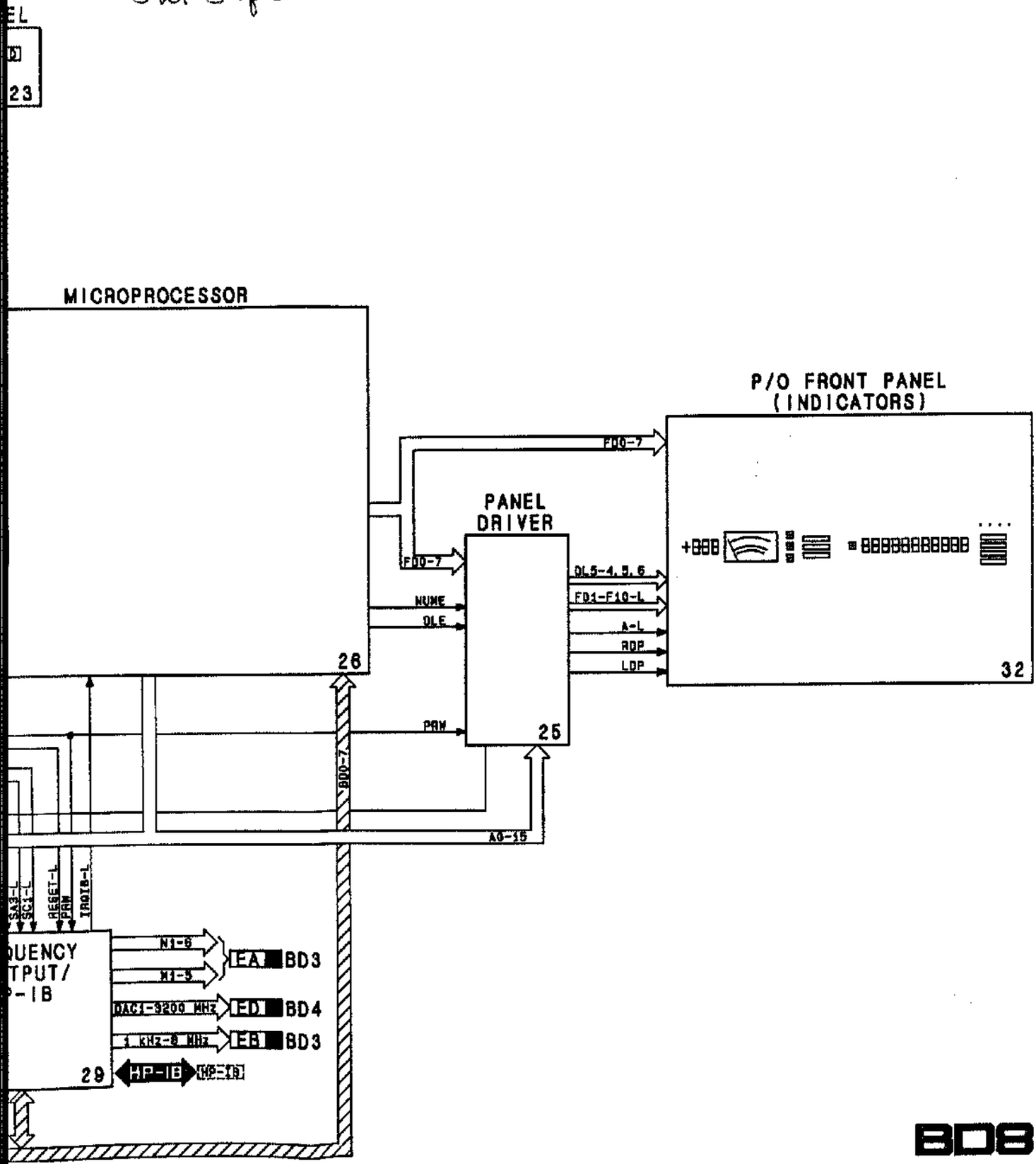


Figure 8-69. HP 8673C/D Controller Assembly, Block Diagram



www.valuetronics.com

## SERVICE SHEET BD9
## POWER SUPPLIES

### REFERENCES

- Overall Block Diagram and Troubleshooting, BD1 ..... Service Sheet BD1
- Disassembly Procedures ..... Service Sheets A & B
- Interior Views ..... Service Sheets C & D
- Illustrated Parts Breakdown (IPB) ..... Section VI
- Post Repair Adjustments ..... Section V

### PRINCIPLES OF OPERATION

Power supplies in A3 and A5 generate all dc operating voltages for the instrument. Voltages provided are as follows:

A3 Power Supplies

+22 Vdc
+20 Vdc
+10 Vdc
+5.2 Vdc
−5.2 Vdc
−10 Vdc
−40 Vdc

A5 Power Supplies

+28 Vdc
+20 Vdc
+15 Vdc
+5.2 Vdc
−10 Vdc
−40 Vdc

The A3 power supply section consists of four parts:

- Mainframe Components
- Rectifier Assembly A3A1
- Positive Regulator Assembly A3A3
- Negative Regulator Assembly A3A4

Mainframe components consist of the input filter, power transformer, series pass transistors, filter capacitors, fan and power-on relay. These components serve to filter and regulate input power. The relay applies ac to the fan when instrument ac line in ON. An LED, located on the motherboard, on the bottom of the instrument, is turned on whenever ac voltages are present on the A3 motherboard.

Rectifier Assembly A3A1 rectifies all ac secondary voltage inputs to the power supplies. Unregulated dc is then routed to the appropriate regulator assemblies. Regulated +22 Vdc is generated on this assembly.

Positive Regulator Assembly A3A3 contains the +20 Vdc regulator, its overvoltage protection circuit, the front panel shutdown circuit, 10 MHz oscillator power supply, power up/down detector, the +5.2 Vdc regulator and its overvoltage protection circuit. The oscillator power supply is contolled by the rear panel INT/EXT switch.



www.valuetronics.com

## SERVICE SHEET BD9 (cont'd)

Negative Regulator Assembly, A3A4, contains the −10 Vdc regulator, −5.2 Vdc Regulator, Switched −10 Vdc output and the −40 Vdc regulator and its associated overvoltage protection circuits.

The A5 power supply section consists of 2 parts:

- Mainframe Components
- Power Supply Assembly A5A10

Mainframe components consist of the power module, which contains a line filter and the line voltage select card, and two transformers. The Power Supply Assembly contains six voltage regulators, one for each of the voltages listed above. In addition the Power Supply Assembly includes a relay for the switched +20 and −10 Vdc outputs. The relay is controlled by the RF on signal from the A5 DAC Enable Board.

## TROUBLESHOOTING

### General

It is assumed that the troubleshooting procedures associated with BD1 have been used to isolate a problem to one of the power supplies. The following troubleshooting procedures can be used to further isolate the problem to one of the following:

Front Panel Assembly — Service Sheet 23
Rectifier Assembly — Service Sheet 33
Positive Regulator Assembly — Service Sheet 34
Negative Regulator Assembly — Service Sheet 35
A5A10 Power Supply Assembly — Service Sheets 46 & 47
A1A5 and A5A5 Dac and Enable Assemblies — Service Sheets 22 & 44

### Test Equipment Required

Digital Voltmeter .....HP3456A

### Procedures

The following procedures are divided into checks as follows:

Rectifier Assembly Check
+22 Volt Check ☑1

Positive Regulator Assembly Checks
+20 Volt Check ☑2
+5.2 Volt Check ☑3
+11 Volt Switched Check ☑4

Negative Regulator Assembly Checks
−10 Volt Check ☑5
−5.2 Volt Check ☑6
−40 Volt Check ☑7
−10 Volt Check ☑8

A5A10 Power Supply Assembly Checks
+28V ☑9
+20V ☑10

8-1386

www.valuetronics.com

+15V (✓11)
+5.2V (✓12)
−10V (✓13)
−40V (✓14)
+20V Switched (✓15)
−10V Switched (✓16)

**Rectifier Assembly Checks.** Rectifier Assembly A3A1 provides a regulated +22 volts as well as the unregulated voltages for the Positive and Negative Regulators. This procedue checks the +22 Volt regulated output.

+22 Volt Check (✓1)

1. Connect the DVM to A3A1TP1.

The DVM should indicate +22 ±0.02 Vdc

If the indication is incorrect, attempt to adjust the voltage to +22.00 volts using A3A1R2.

If the indication is correct, or if the voltage can be adjusted to +22.00 volts, proceed with the next check.

If the indication is incorrect and cannot be adjusted to +22.00 volts, the Rectifier Assembly is defective. Go to Service Sheet 33 to isolate the problem.

**Positive Regulator Assembly.** Positive Regulator Assembly A3A3 provides the following voltages:

+20 Vdc
+5.2 Vdc
+11 Vdc Switched

Each is checked separately.

+20 Volt Check (✓2)

2. Connect DVM to A3A3TP5.

The DVM should indicate +20 ±0.002 Vdc.

If the indication is not correct, attempt to adjust the voltage to +20.000 Vdc using A3A3R50.

If the voltage is correct, or if it can be adjusted, proceed with Step 4.

If the voltage cannot be adjusted, proceed with Step 3 to isolate the problem.

3. Connect DVM to A3A3TP4.

The DVM should indicate between 27 and 33 Vdc.

If the DVM indication is not correct, the Rectifier Assembly is defective. Go to Service Sheet 33 to isolate the problem.

If the DVM indication is correct, the +20 Volt Regulator is defective. Go to Service Sheet 34 to isolate the problem.



www.valuetronics.com

**SERVICE SHEET BD9 (cont'd)**

+5.2 Volt Check ☑3

4. Connect the DVM to A3A3TP2.

   The DVM should indicate +5.2 ±0.01 Vdc.

   If the DVM indication is correct, proceed with Step 6.

   If the DVM indicaton is not correct, proceed with Step 5.

5. Connect DVM to A3A3TP1.

   The DVM should indicate between 10 and 15 Vdc.

   If the DVM indication is correct, the +5.2 Volt Regulator is defective. Go to Service Sheet 34 to isolate the problem.

   If the DVM indication is not correct, the Rectifier Assembly is defective. Go to Service Sheet 33 to isolate the problem.

+11 Volts Switched ☑4

6. Ensure that the rear panel INT/EXT switch is set to INT.

7. Connect the DVM to A3A3TP6.

   The DVM should indicate +11 ±1.1 Vdc.

   If the DVM indication is correct, proceed with Step 11.

   If the DVM indication is not correct, proceed with Step 8.

8. Remove A3A3 and replace it on a 36 pin extender board.

9. Using the DVM, check for continuity (0 ohms) between XA3A3-18 (TPA) and ground.

   If there is continuity, the Oscillator Power Supply is defective. Go to Service Sheet 34 to isolate the problem.

   If there is no continuity, Switch A3S1 or the wiring to it is defective.

**Negative Regulator Assembly.** Negative Regulator Assembly A3A4 provides the following voltages:

−10 Volts
−5.2 Volts
−40 Volts

Each is checked separately.

−10 Volt Check ☑5

10. Connect the DVM to A3A4TP4.

    The DVM should indicate −10 ±0.2 Vdc.

    If the DVM indication is correct, proceed with Step 12.

    If the DVM indication is not correct, proceed with Step 11.

11. Leave the DVM connected to A3A4TP4 but connect the DVM COMMOM lead to A3A4TP3.

    The DVM should indicate between −15 and −22 volts.



www.valuetronics.com

If the indication is correct, the −10 Volt Regulator is defective. Go to Service Sheet 35 to isolate the problem.

If the indication is not correct, the Rectifier Assembly is defective. Go to Service Sheet 33 to isolate the problem.

−5.2 Volt Check (6)

12. Connect the DVM to A3A4TP5 with COMMON lead to ground.

    The DVM should indicate −5.2 ±0.05 Vdc.

    If the indication is correct, proceed with Step 13.

    If the indication is not correct, the −5.2 volt regulator is defective, go to Service Sheet 35 to isolate the problem.

−40 Volt Check (7)

13. Connect the DVM to A3A4TP1 with the COMMON lead to ground.

    The DVM should indicate −40 +0.6 −1.0 Vdc.

    If the DVM indication is correct, proceed with Step 15.

    If the DVM indication is not correct, proceed with Step 14.

14. Remove the DVM COMMON lead from ground and connect it to A3A4TP2.

    The DVM should indicate between −48 and −63 Vdc.

    If the indication is correct, the −40 volt regulator is defective. Go to Service Sheet 35 to isolate the problem.

    If the indication is not correct, the Rectifier Assembly is defective. Go to Service Sheet 33

−10 Volt Switched Check (8)

15. Remove Negative Regulator A3A4 and replace it on and extender board.

16. Connect the DVM to XA3A4-14 or -32 (TPD), and observe that the DVM reads −10 volts.

17. While observing the DVM, press the front panel RF OUTPUT ON/OFF key (key LED off).

    The DVM indication should drop from −10 volts to zero volt when the RF OUTPUT ON/OFF key is pressed.

    If the voltage does drop to zero, proceed with Step 18.

    If the voltage does not drop to zero, proceed with Step 20.

18. Press the front panel RF OUTPUT ON/OFF key (key LED on) and observe that the DVM indication returns to −10 volts.



www.valuetronics.com

**SERVICE SHEET BD9 (cont'd)**

19. While observing the DVM, short A3A3TP2 to ground.

    The DVM indication should drop to zero volt.

    If the voltage does drop to zero, proceed with Step 24.

    If the voltage does not drop to zero, proceed with Step 22.

20. Press the front panel RF OUTPUT ON/OFF key (key LED on).

21. Connect the DVM to XA3A4-18 (TPC), and , while observing the DVM, press the front panel RF OUTPUT ON/OFF key (key LED off).

    The DVM indication should drop from +5 volts to zero volt when the key is pressed.

    If the voltage does drop, relay A3A4K1 or associated components are defective. Go to Service Sheet 35 to isolate the problem.

    If the voltage does not drop, there is a problem with the logic latch, the switch or associated circuitry on DAC and ENABLE board A1A5. Go to Service Sheet 22 to isolate the problem.

22. Remove the ground from A3A3TP2, connect the DVM to XA3A4-18 (TPC), and, while observing the DVM, ground A3A3TP2.

    The voltage should drop from +5 volts to zero volts when A3A3TP2 is grounded.

    If the indication is incorrect, relay A3A4K1 is defective. Go to Service Sheet 35 to isolate the problem.

    If the indication is correct, proceed with Step 23.

23. Remove the ground from A3A3TP2, connect the DVM to XA3A3-35 (TPB), then, while observing the DVM, ground A3A3TP2.

    The voltage should drop from +5 volts to zero volts when A3A3TP2 is grounded.

    If the indication is correct, there is a problem with the switch or associated components on DAC and Enable Board A1A5. Go to Service Sheet 22 to isolate the problem.

    If the indication is not correct, there is a problem with the Power Up/Down Detector on Positive Regulator A3A3. Go to Service Sheet 34 to isolate the problem.

**A5A10 Power Supply Checks.** The A5A10 Power Supply Checks are given in Table 8-47. If any voltage is incorrect, attempt to adjust it with the adjustment shown in the table, if any. If it cannot be adjusted (or if there is no adjustment given) go to the Service Sheet or Step indicated in the last column.

24. Remove DAC and Enable Board A5A5 and replace it on a 44 pin extender board.

25. Press RCL 0, then connect the DVM to XA5-33 (TPE).

26. While observing the DVM, press the front panel RF OUTPUT ON/OFF key (key LED off).

    The voltage should drop from +5 volts to zero volts when the RF OUTPUT ON/OFF key is pressed.

    If the voltage changes as indicated, relay A5A10K1 or associated components are defective. Go to Service Sheet 47 to isolate the problem.

    If the voltage does not change as indicated, there is a problem with the Logic Latch, the Switch or associated components on DAC and Enable board A5A5. Go to Service Sheet 44 to isolate the problem.



www.valuetronics.com

## SERVICE SHEET BD9 (cont'd)

Table 8-47. A5A10 Voltage Checks

| Check # | Testpoint A5A10 | Voltage | Adjust A5A10 | Service Sht/Stp |
|---|---|---|---|---|
| | TP2 | +28 ±0.05 | R6 | SS-46 |
| | TP11 | +20 ±0.05 | R9 | SS-46 |
| | TP1 | +15 ±0.05 | NONE | SS-46 |
| | TP10 | +5.2 ±0.05 | R39 | SS-47 |
| | TP9 | −10 ±0.05 | R41 | SS-47 |
| | TP8 | −40 ±0.05 | R44 | SS-47 |
| | A5A10J6-3,8 (TPF) | +20 (SWITCHED) | N/A | STEP 24 |
| | A5A10J6-7 (TPG) | −10 (SWITCHED) | N/A | STEP 24 |



www.valuetronics.com

FIG. 8-70
Sht 1 of 4

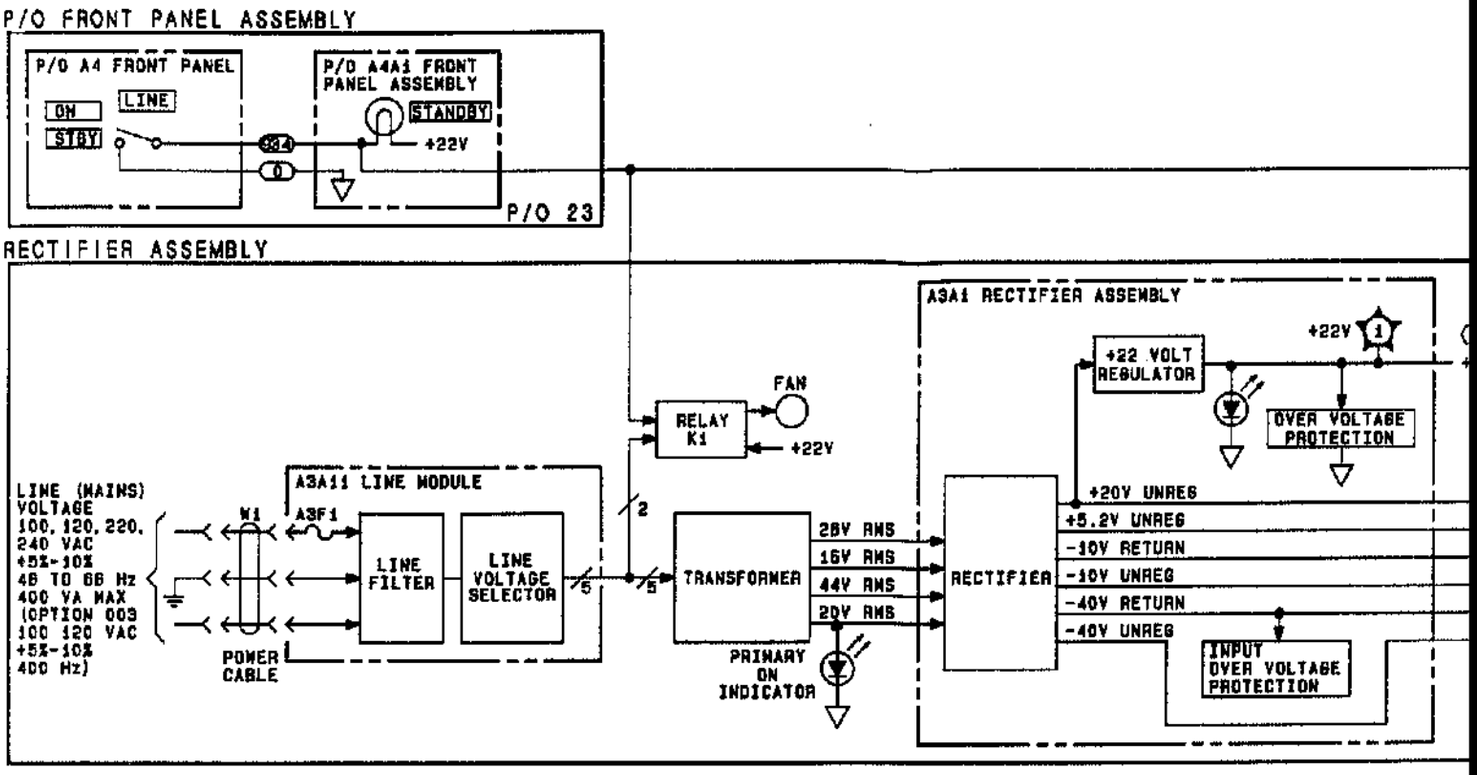


www.valuetronics.com

FIG. 8-70
Sht 2 of 4

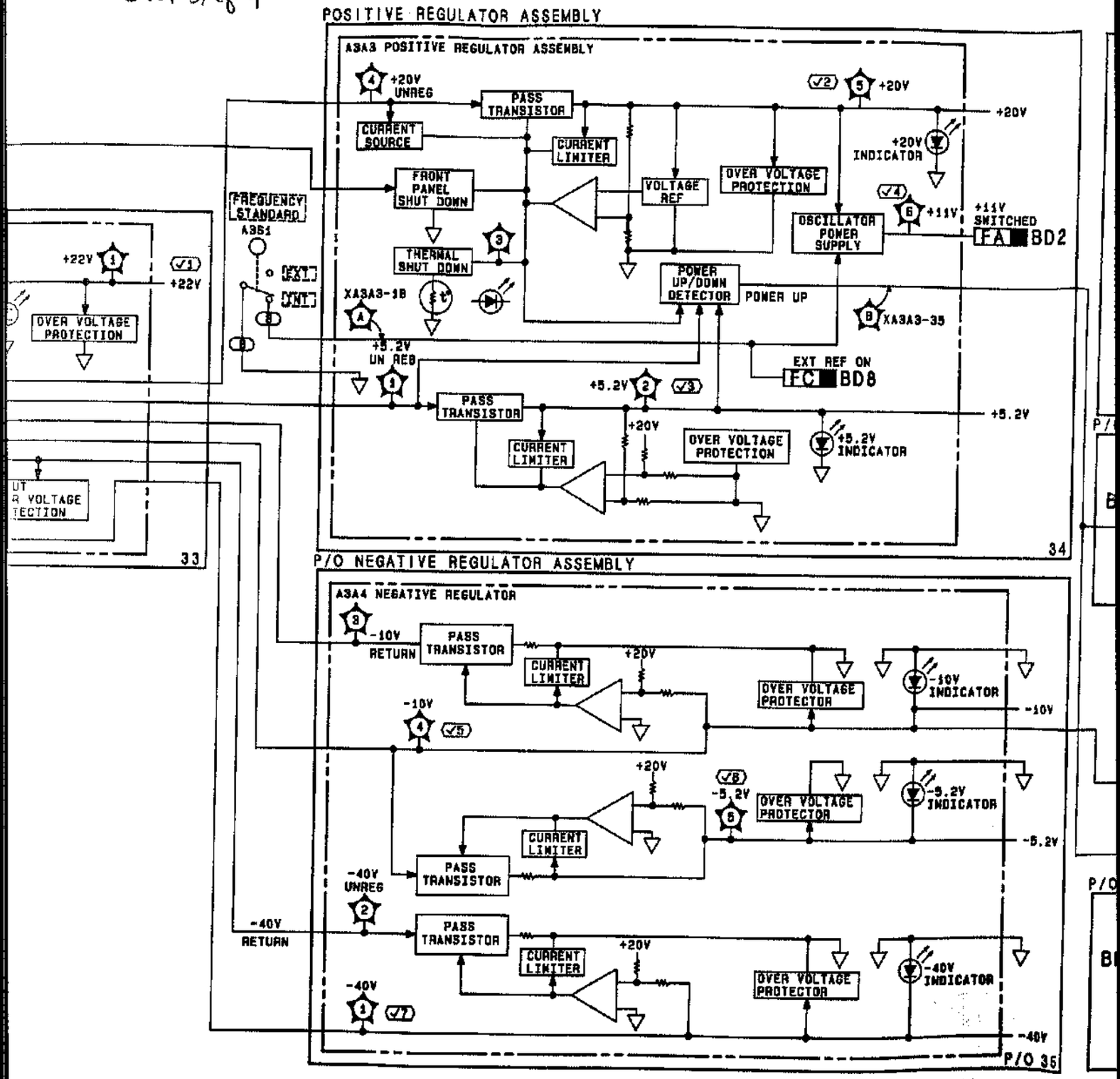


www.valuetronics.com

FIG. 8-70
Sht 3 of 4

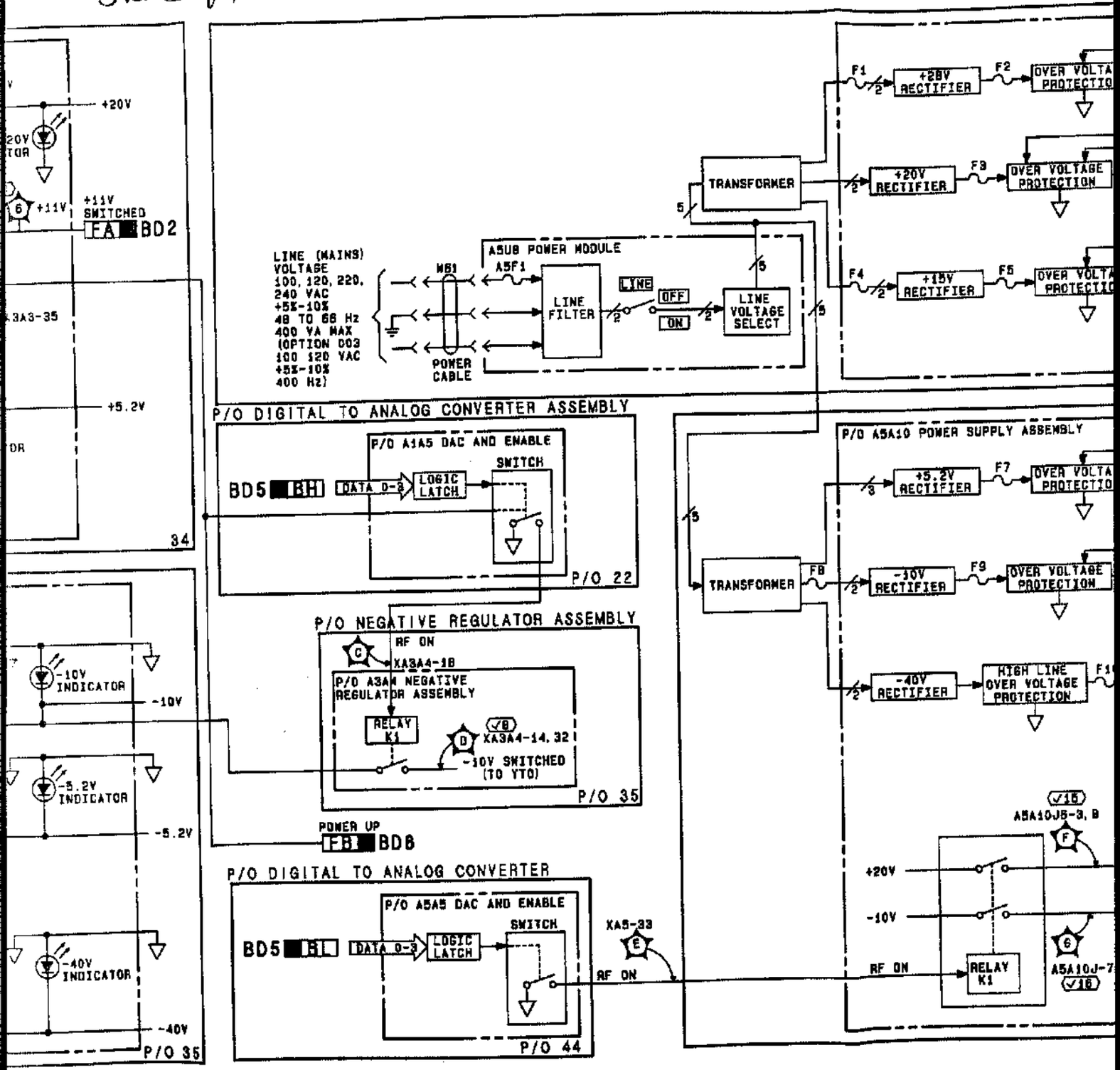


www.valuetronics.com

FIG. 8-70
Sht 4 of 4

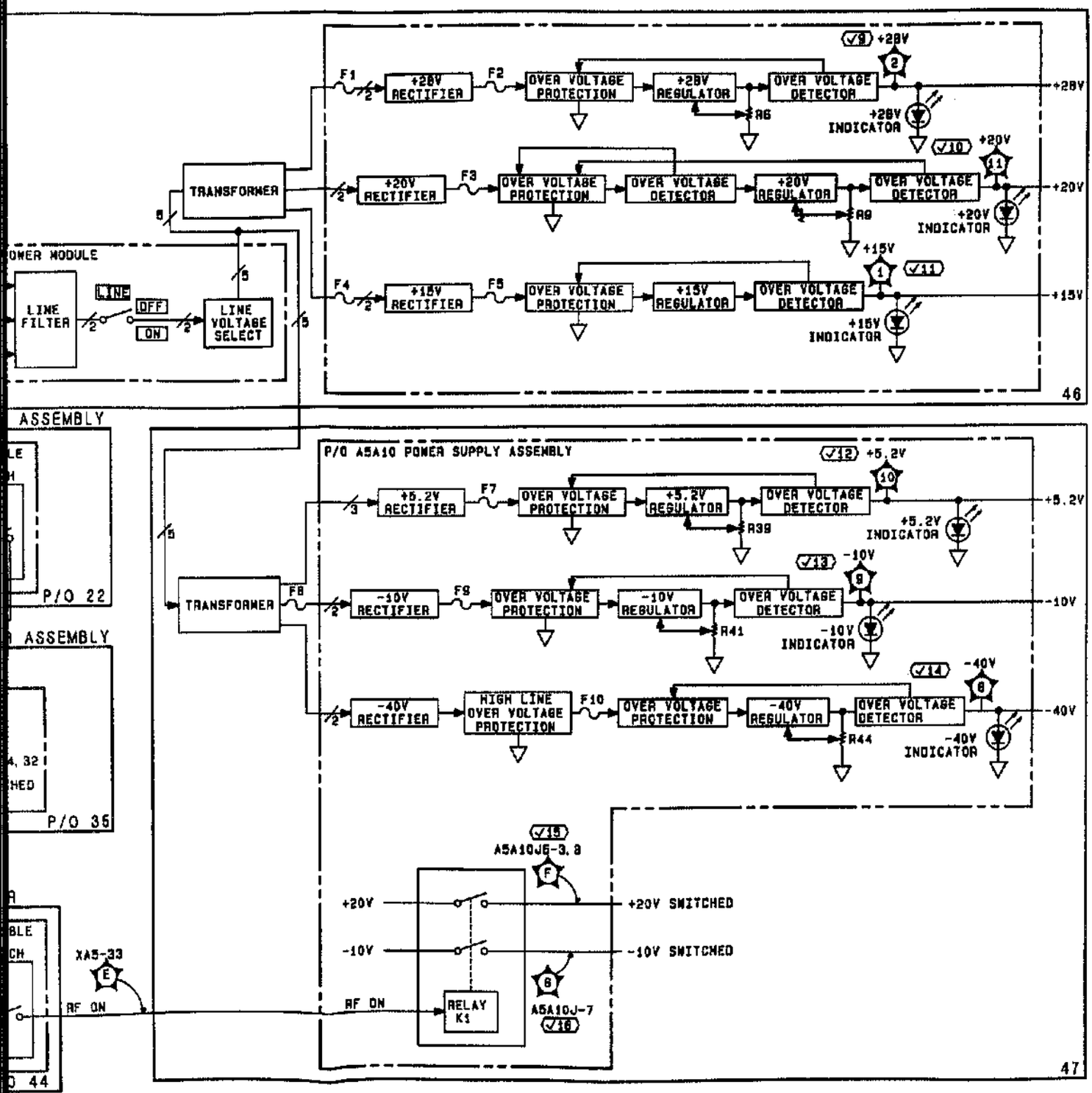


Figure 8-70. 8673C/D Power Supply Block Diagram



www.valuetronics.com

Service Shts 1-10

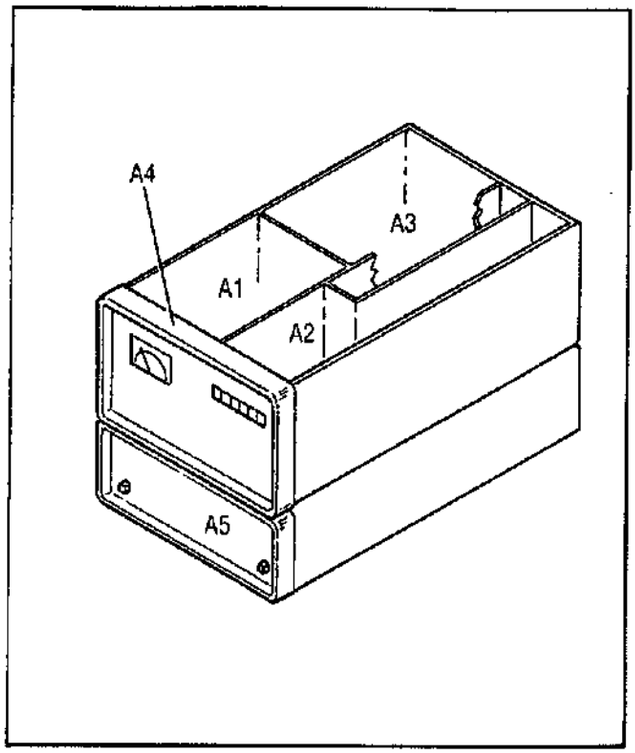


**Major Assemblies**

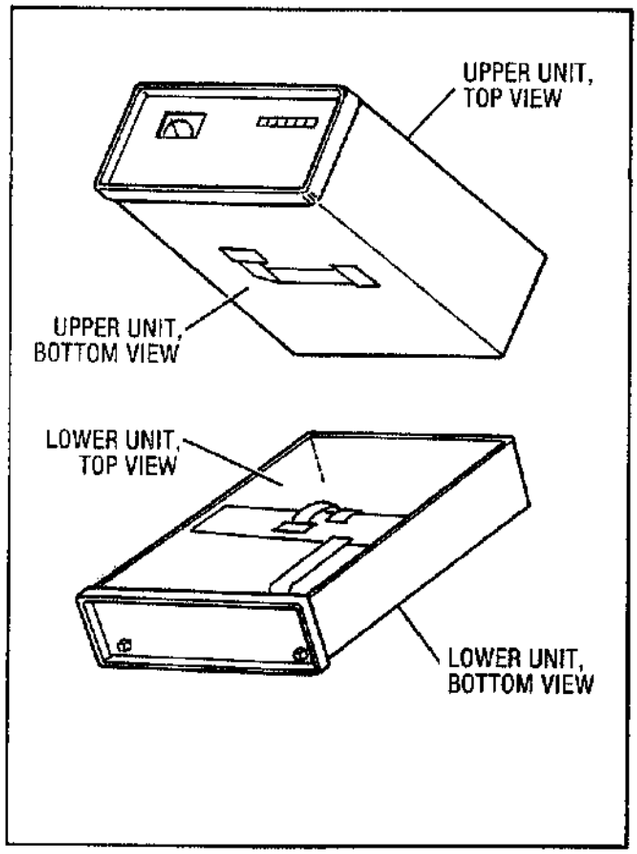


**Internal View Identification**

## Assemblies vs. Service Sheet List

| Assembly | Description | Ser.Sheet |
|---|---|---|
| A1A1 | Attenuator Driver Board Assembly | 18 |
| A1A2 | Detector Module Assembly | 14,17 |
| A1A2A1 | ALC Board Assembly | 14,17 |
| A1A2A2 | Detector Board Assembly | 17 |
| A1A3 | Function Board Assembly | 20 |
| A1A4 | Pulse Driver Board Assembly | 15 |
| A1A5 | DAC and Enable Board Assembly | 22 |
| A1A6 | Meter Board Assembly | 20,40 |
| A1A7 | YTM Driver Board Assembly | 16 |
| A1A8 | SRD Bias Board Assembly | 19 |
| A1A9 | Preamp Assembly | 14,16 |
| A1A10 | YTM Assembly | 16 |
| A1A10A1 | YIG Heater Control Assembly | 16 |
| A1A11 | Power Amplifier Assembly | 16 |
| A1A12 | Motherboard Assembly | 14-16,18-22, 30,31,40 |
| A1A13 | Terminal Strip | 37 |
| A1A14 | Amp Bias Board Assembly | 17 |
| A2A1 | Panel Driver Board Assembly | 25 |
| A2A2 | Key Code Board Assembly | 24 |
| A2A3 | VCO Assembly | 8 |
| A2A4 | Phase Detector Assembly | 7 |
| A2A5 | Divider Assembly 20/30 | 6 |
| A2A6 | Not Assigned | |
| A2A7 | I/O Board Assembly | 30,31 |
| A2A8 | Microprocessor Board Assembly | 26 |
| A2A9 | Frequency/HP-IB Board Assembly | 29 |
| A2A10 | RAM Board Assembly | 28 |
| A2A11 | ROM Board Assembly | 27 |
| A2A13 | Motherboard Assembly | 6-8,10, 20-32 |
| A2A14 | Rear Interconnect Board Assembly | 24,29, 31 |
| A2A15 | HP-IB Connector Board Assembly | 29 |
| A3A1 | Rectifier Assembly | 33 |
| A3A1A1 | Reference Phase Detector Assembly | 1,2 |
| A3A1A2 | 100 MHz VCXO Assembly | 2 |
| A3A1A3 | M/N Phase Detector Assembly | 3 |
| A3A1A4 | M/N VCO Assembly | 4 |
| A3A1A4A1 | VCO Resonator | 4 |
| A3A1A4A2 | VCO Board Assembly | 4 |
| A3A1A5 | M/N Output Assembly | 5 |
| A3A1A6 | M/N Reference Motherboard Assembly | 1-3,5 |
| A3A1A7 | Reference Housing Assembly | |
| A3A2 | Not Assigned | |
| A3A3 | Positive Regulator Assembly | 34 |
| A3A4 | Negative Regulator Assembly | 35 |
| A3A5 | DAC Assembly | 9 |
| A3A6 | YTO Driver Assembly | 10 |
| A3A7 | FM Driver Assembly | 13 |
| A3A8 | 10 MHz Reference Oscillator | 1 |
| A3A9 | YTO Loop Assembly | 11,12 |
| A3A9A1 | Directional Coupler Assembly | 13 |
| A3A9A2 | YTO Interconnect Assembly | 11-13 |
| A3A9A3 | 2.0 - 6.6 GHz YTO Assembly | 13 |
| A3A9A4 | YTO Phase Detector Assembly | 12 |
| A3A9A5 | Sampler Assembly | 11 |
| A3A9A6 | Attenuator Assembly | 13 |
| A3A9A7 | 6.2 GHz Low Pass Filter | 13 |
| A3A10 | Motherboard Assembly | 1,3,6,10, 12-14,21-23 26, 29-31, 33-35 |
| A4A1 | Front Panel Board Assembly | 20,22, 23,32,40 |
| A5A1 | Front Panel Board Assembly | 41,42,44 |
| A5A2 | Detector Module Assembly | 36,39 |
| A5A2A1 | ALC Board Assembly | 36,39 |
| A5A2A2 | Detector Board Assembly | 39 |
| A5A3 | Function Board Assembly | 42 |
| A5A4 | Pulse Driver Board Assembly | 37 |
| A5A5 | DAC and Enable Board Assembly | 44 |
| A5A6 | Switch Driver Board Assembly | 36,41 |
| A5A7 | YTM Driver Board Assembly | 38 |
| A5A8 | Motherboard Assembly | 36-38,40-44, 46,47 |
| A5A9 | Microprocessor Board Assembly | 43 |
| A5A10 | Power Supply Board Assembly | 45-47 |
| A5A11 | Regulator 2 Board Assembly | 46 |
| A5A12 | Regulator 1 Board Assembly | 46,47 |
| A5A13 | Pulse Input Assembly | 37 |
| A5A13A1 | Pulse Input Switch Board Assembly | 37 |

www.valuetronics.com

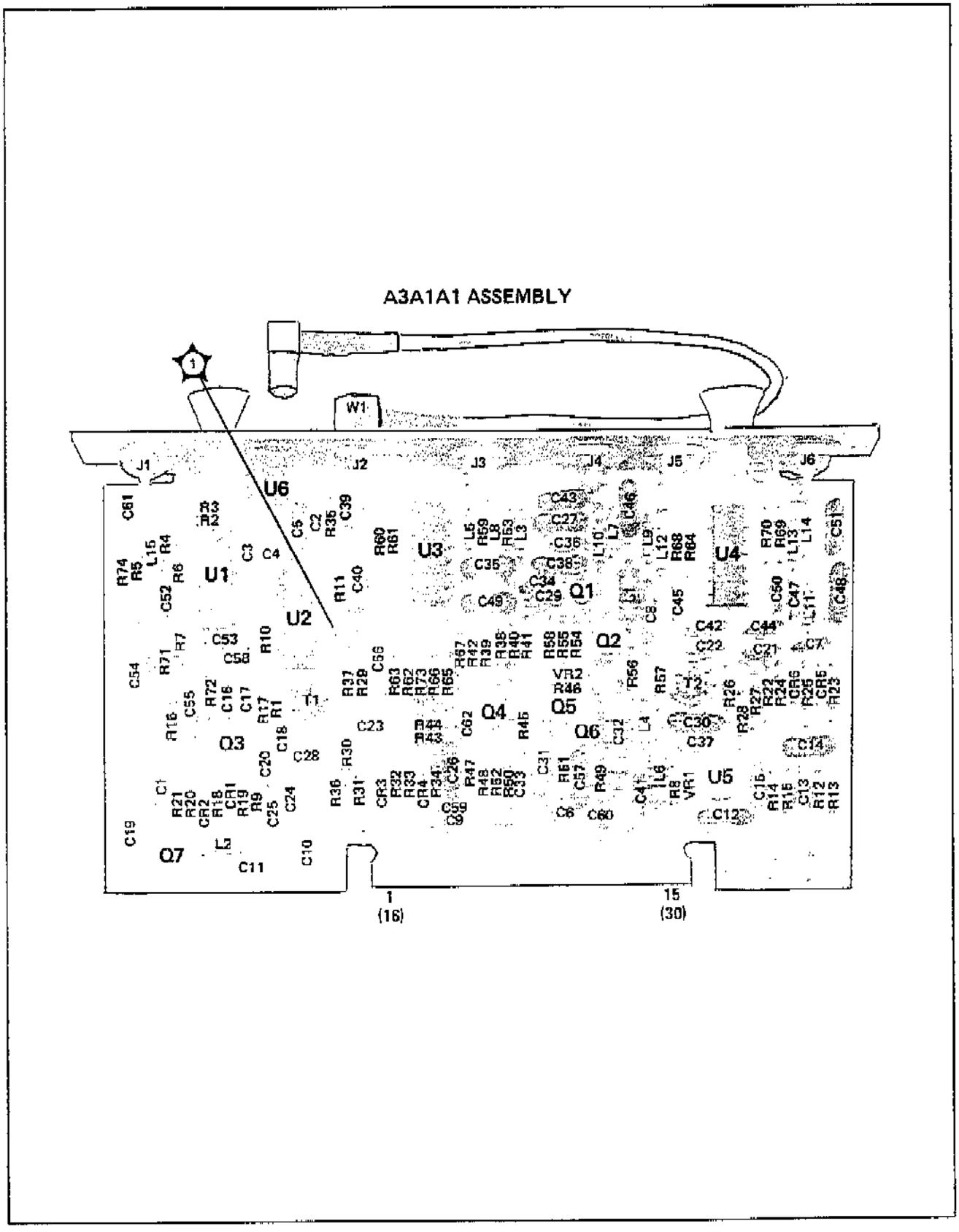


Figure 8-201. A3A1A1 Reference Phase Detector Assembly Component and Test Point Location

8-201a

www.valuetronics.com

FIG. 8-202
SHT 1 of 4

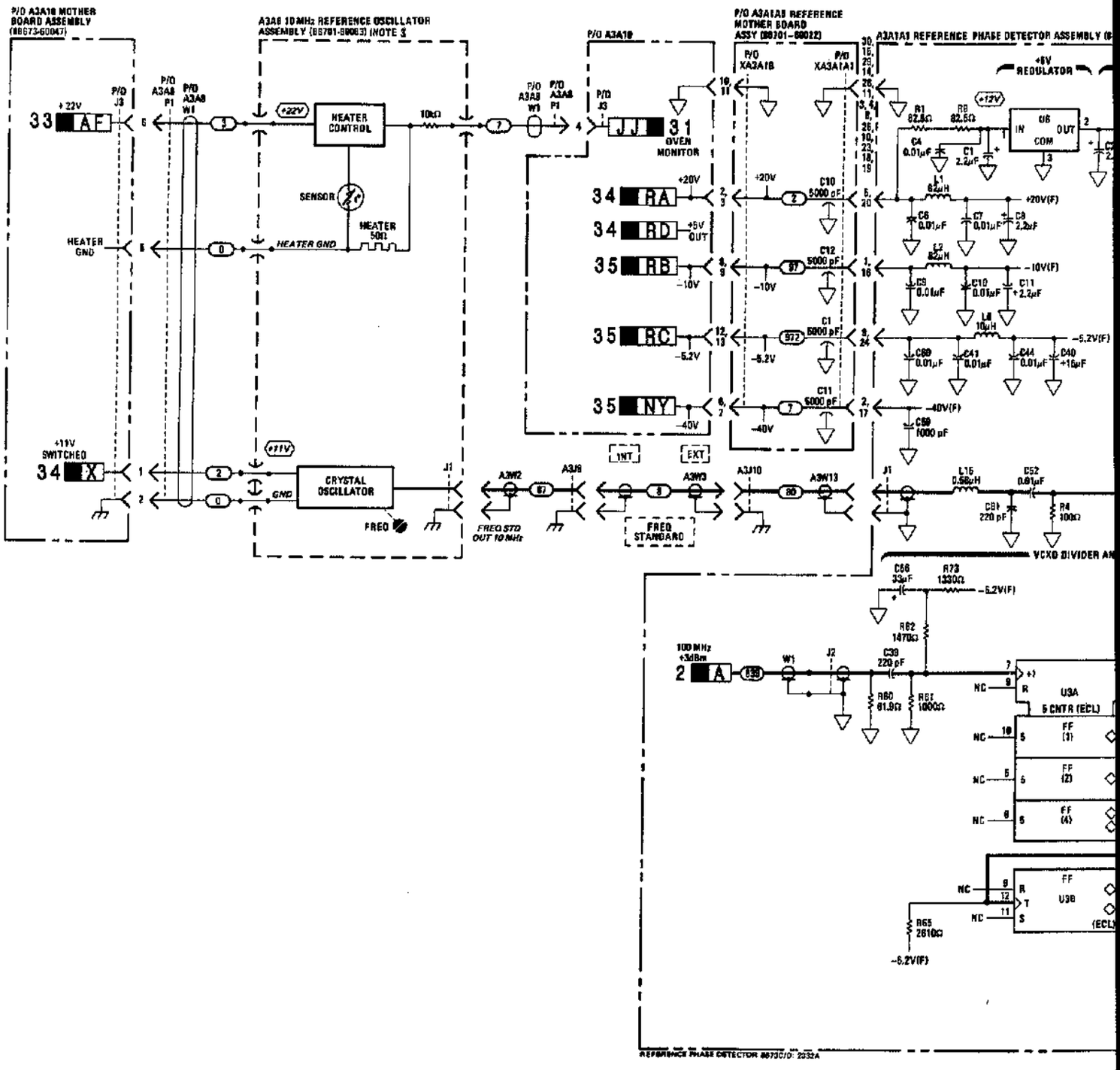


www.valuetronics.com

FIG. 8-202
SHT 2 of 4

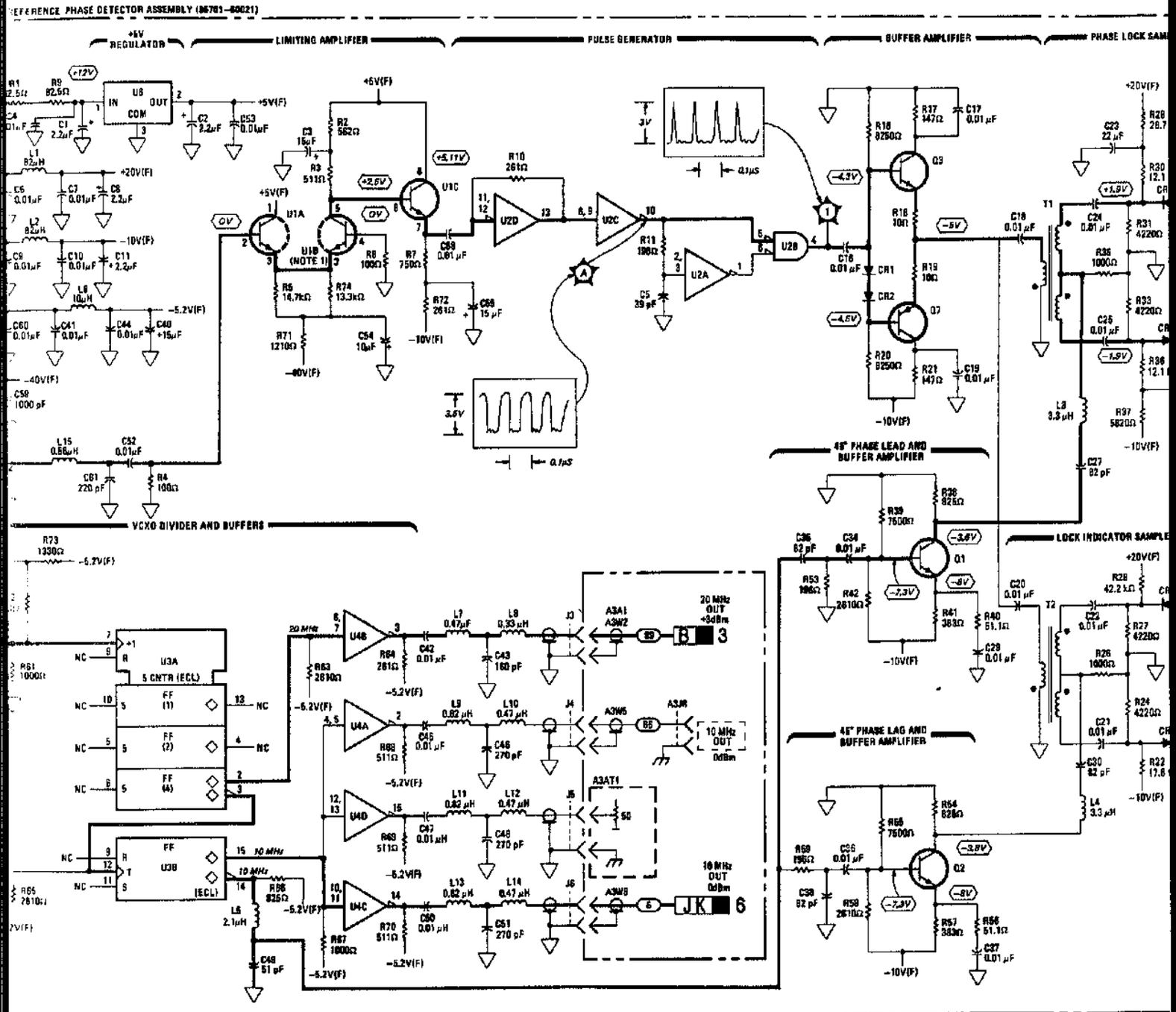


www.valuetronics.com

FIG. 8-202
Sht 3 of 4

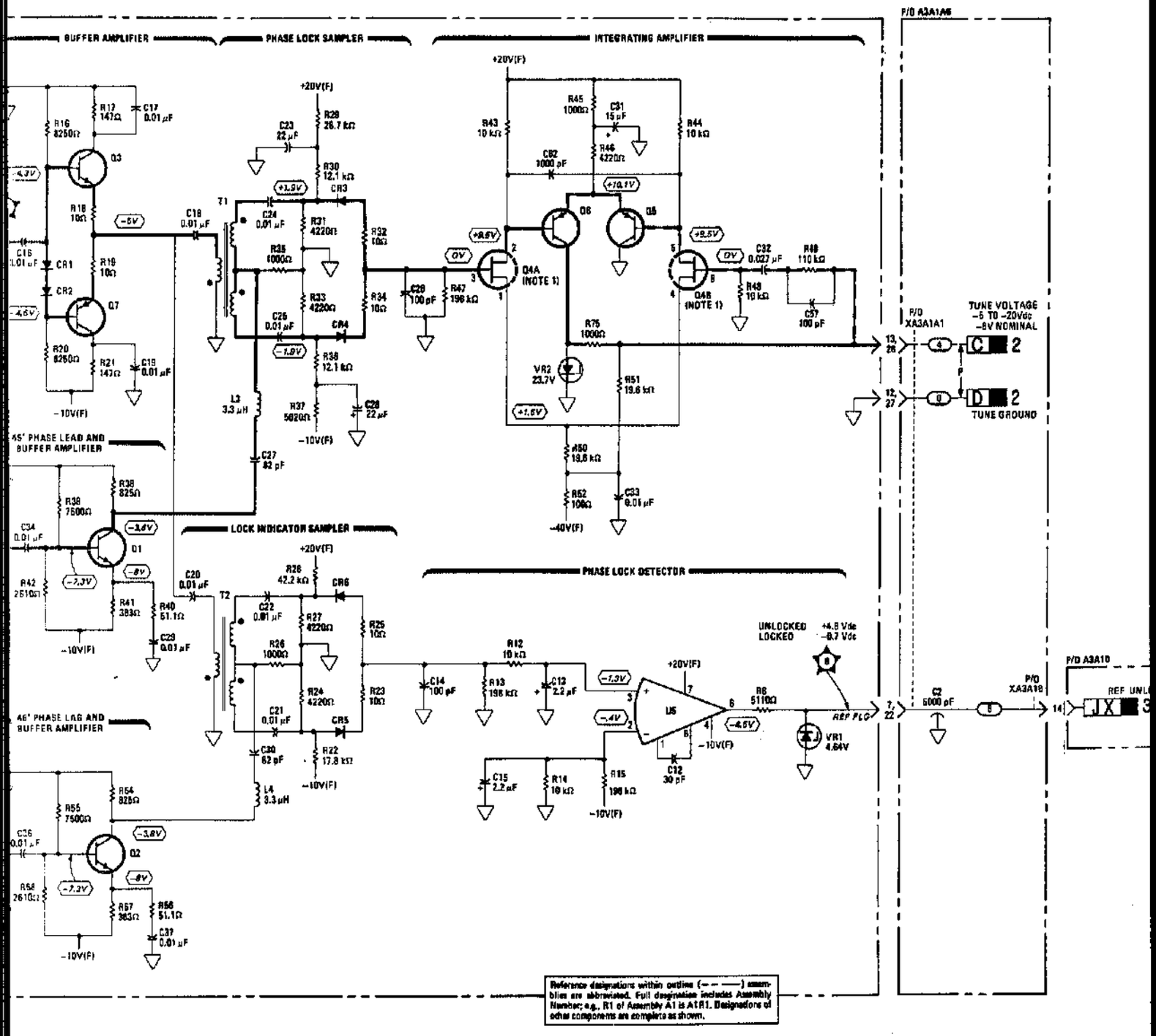


Figure

www.valuetronics.com

FIG. 8-202
Sht 4 of 4

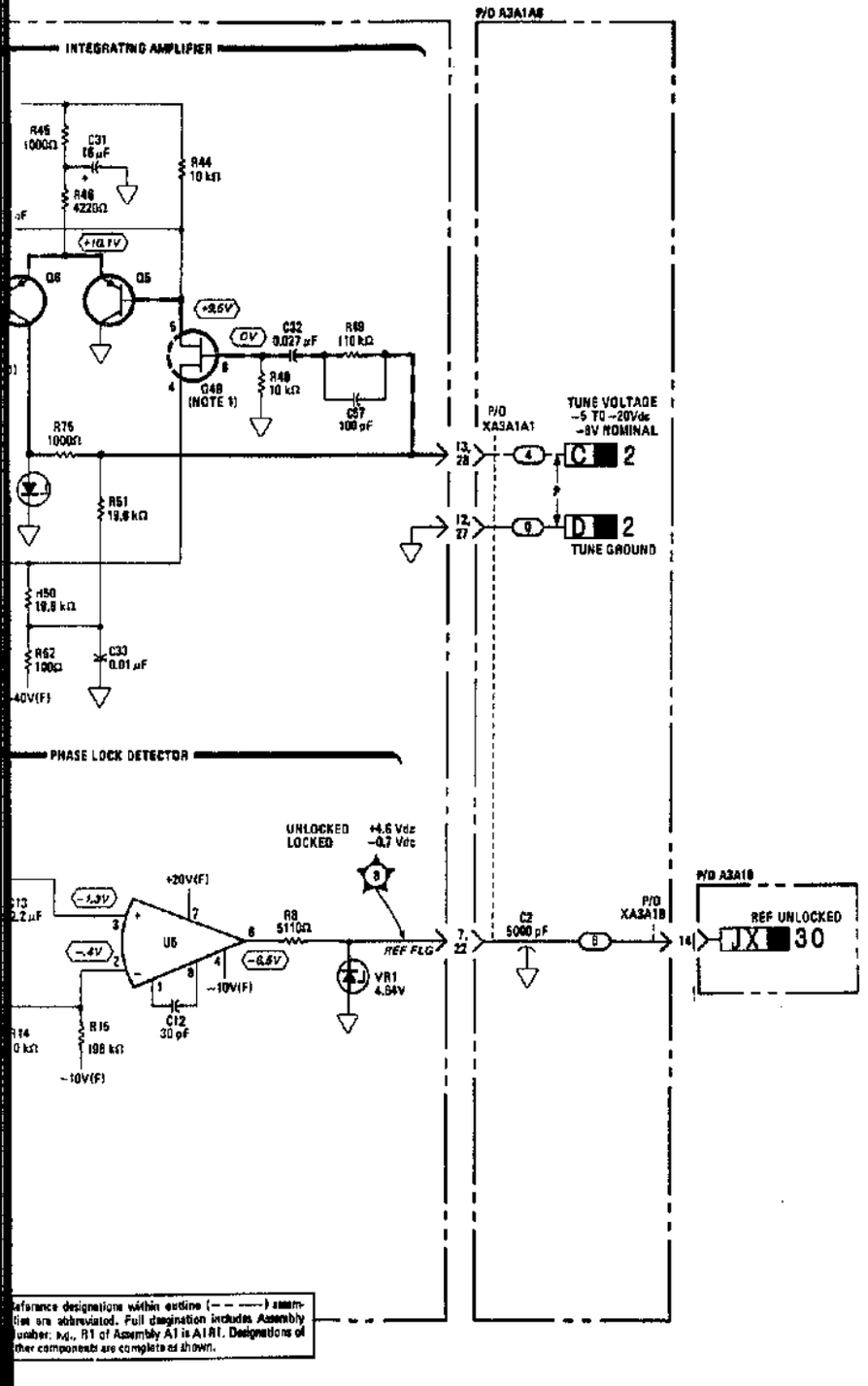


NOTES

1. REFER TO THE FOLLOWING DIAGRAM FOR PIN LOCATIONS

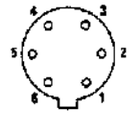


2. REFER TO TABLE 8-1 FOR SCHEMATIC DIAGRAM NOTES.
3. FIELD REPAIRABLE COMPONENT. REFER TO OSCILLATOR OPERATING AND SERVICE MANUAL.

REFERENCE DESIGNATIONS

| | |
|---|---|
| A3 | A3A1A3 |
| ATT J8–18 W2,3,5,8,13 | W2 |
| | A3A1A8 |
| A3A1A1 | C1,2,10–12 XA3A1B XA3A1A1 |
| C1–62 CR1–6 J1–5 L1–15 Q1–7 R1–75 T1,2 TP1 U1–8 VR1,2 W1 | A3A8 |
| | P1 W1 |
| | A3A10 |
| | J3 |

LOGIC LEVELS

| LOGIC | TTL | ECL | EECL | CMOS |
|---|---|---|---|---|
| HIGH(1) | >2V | >−0.5V | >−0.1V | ≈VDD |
| LOW(0) | <0.8V | <−1.5V | <−0.8V | <0.1V |

≤ = EQUAL TO OR MORE NEGATIVE THAN
≥ = EQUAL TO OR MORE POSITIVE THAN

| INPUT | TTL | ECL | EECL | CMOS |
|---|---|---|---|---|
| GROUND | LOW(0) | HIGH(1) | HIGH(1) | LOW(0) |
| OPEN | HIGH(1) | LOW(0) | LOW(0) | X |

GROUND = 0V; X = UNDEFINED

TRANSISTOR AND INTEGRATED CIRCUIT PART NUMBERS

| REFERENCE DESIGNATIONS | PART NUMBERS |
|---|---|
| Q1–3 | 1854–0019 |
| Q4 | 1855–0049 |
| Q5,6 | 1853–0461 |
| Q7 | 1854–0034 |
| U1 | 1821–0001 |
| U2 | 1820–0328 |
| U3 | 1826–1383 |
| U4 | 1820–0902 |
| U6 | 1826–0223 |
| U8 | 1820–0429 |

INTEGRATED CIRCUIT VOLTAGE AND GROUND CONNECTIONS

| REFERENCE DESIGNATIONS | PIN NUMBERS |
|---|---|
| U2 | +5V(F) — 14 |
| | ▽ — 7 |
| U3 | −5V(F) — 8 |
| | ▽ — 1,15 |
| U4 | −5V(F) — 8 |
| | ▽ — 16 |

Reference designations within outline (— — —) assemblies are abbreviated. Full designation includes Assembly number; e.g., R1 of Assembly A1 is A1R1. Designations of other components are completely shown.

1

A3A1A1, A3A8

Figure 8-202. Reference Phase Detector Assembly Schematic Diagram



www.valuetronics.com

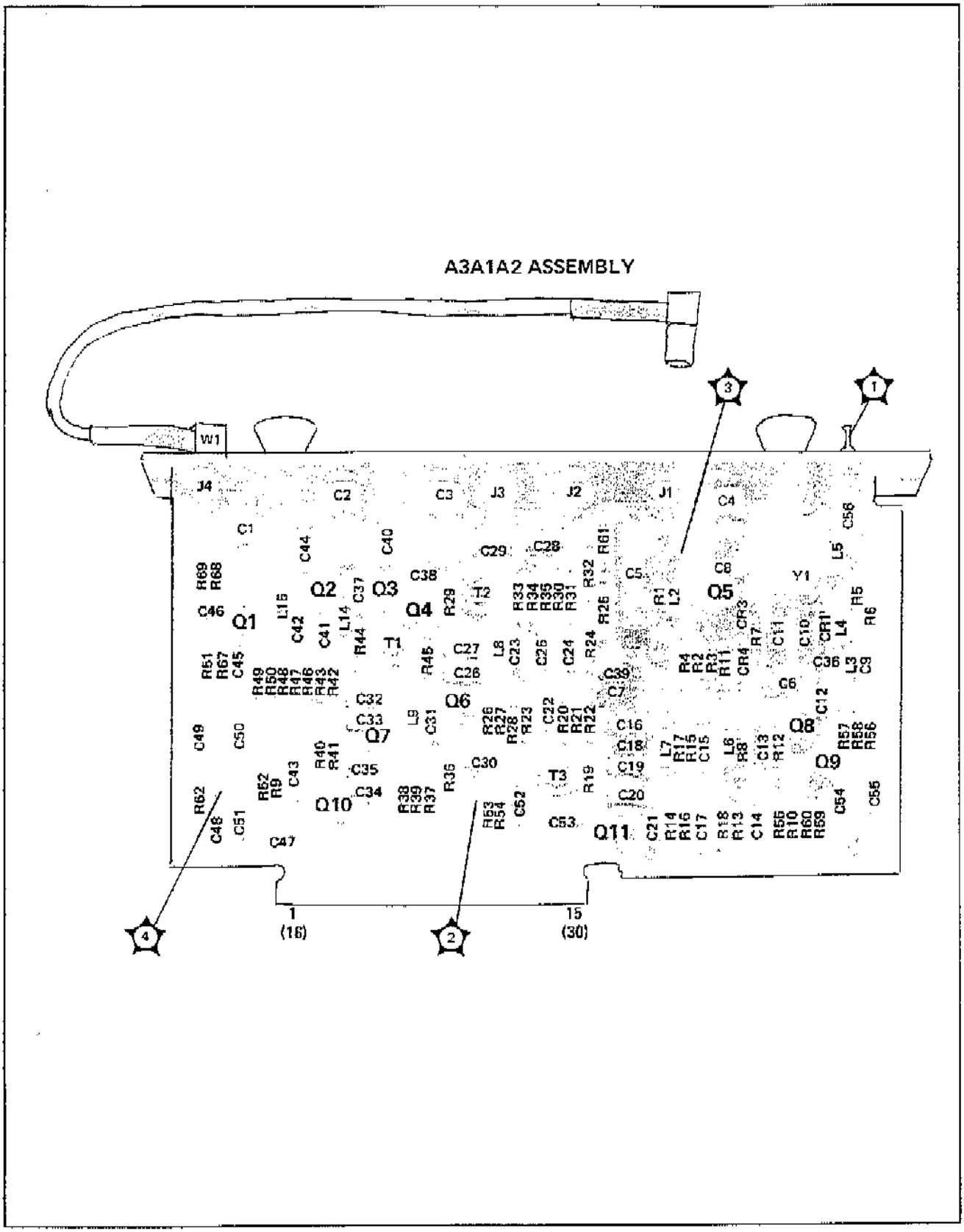


Figure 8-203. A3A1A2 100 MHz VCXO Assembly Component and Test Point Location

8-203a

www.valuetronics.com

FIG. 8-204
SHT 1 of 3

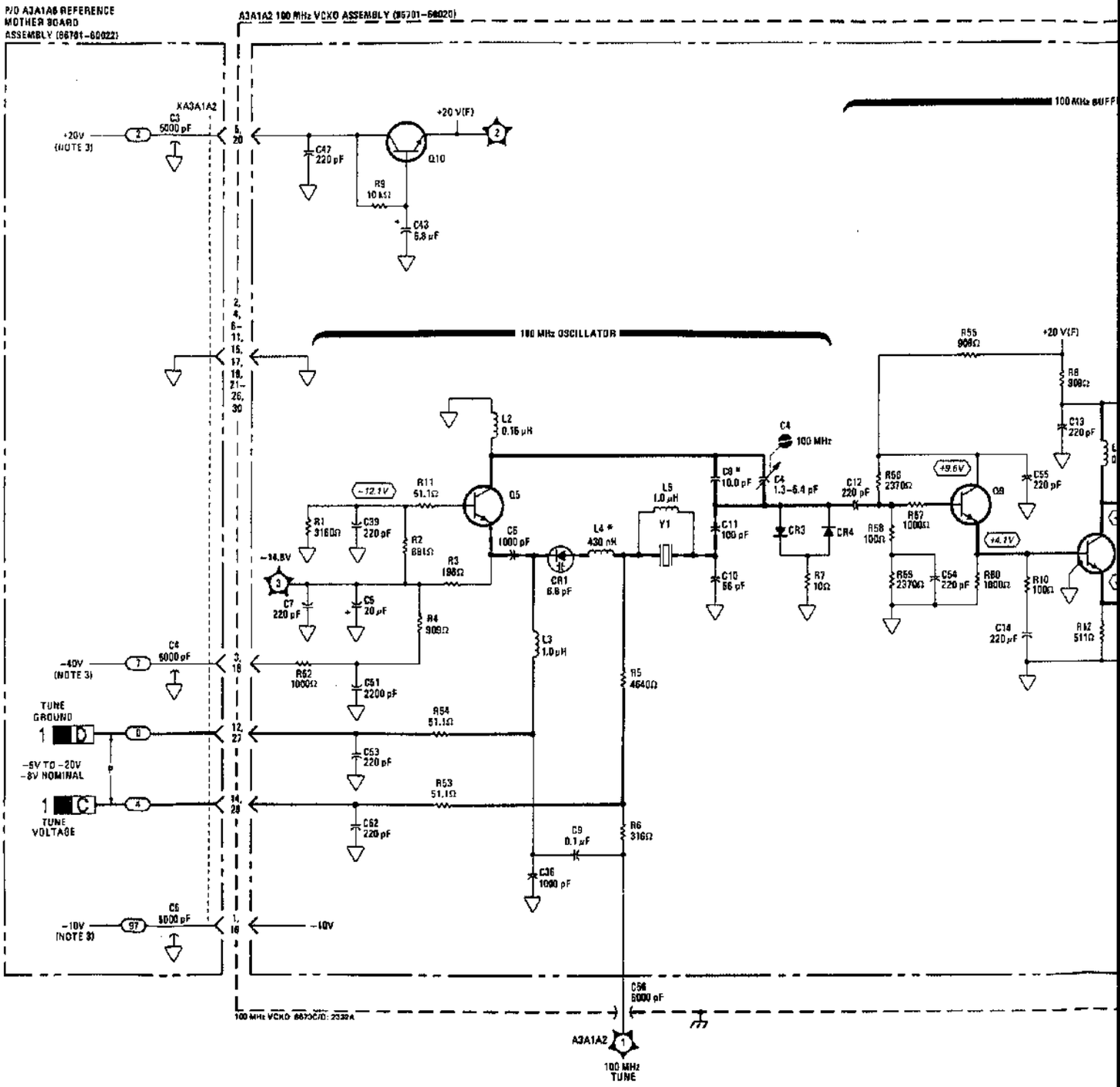


www.valuetronics.com

FIG. 8-204
Sht 2 of 3

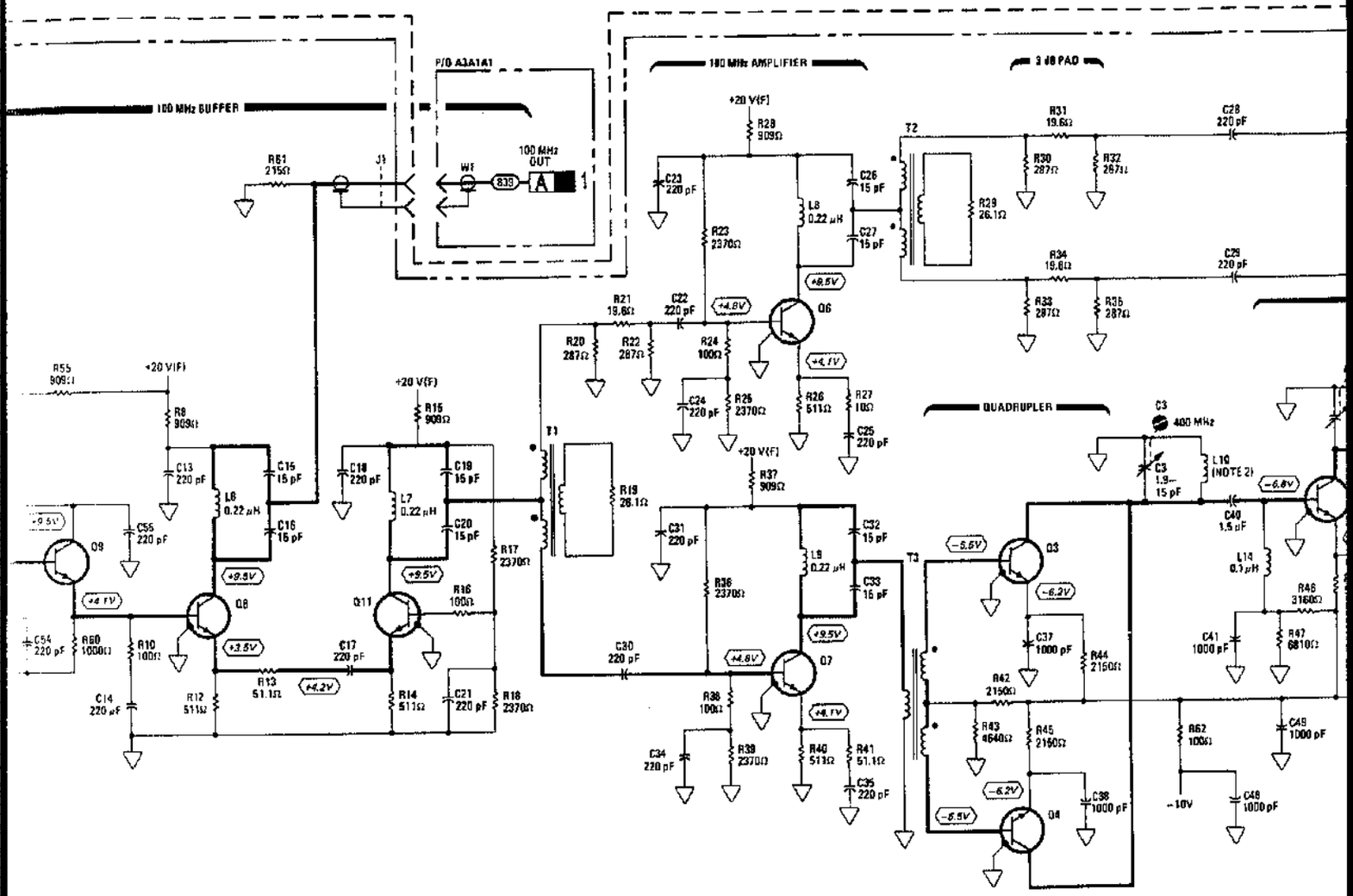


www.valuetronics.com

FIG. 8-204
Sht 3 of 3

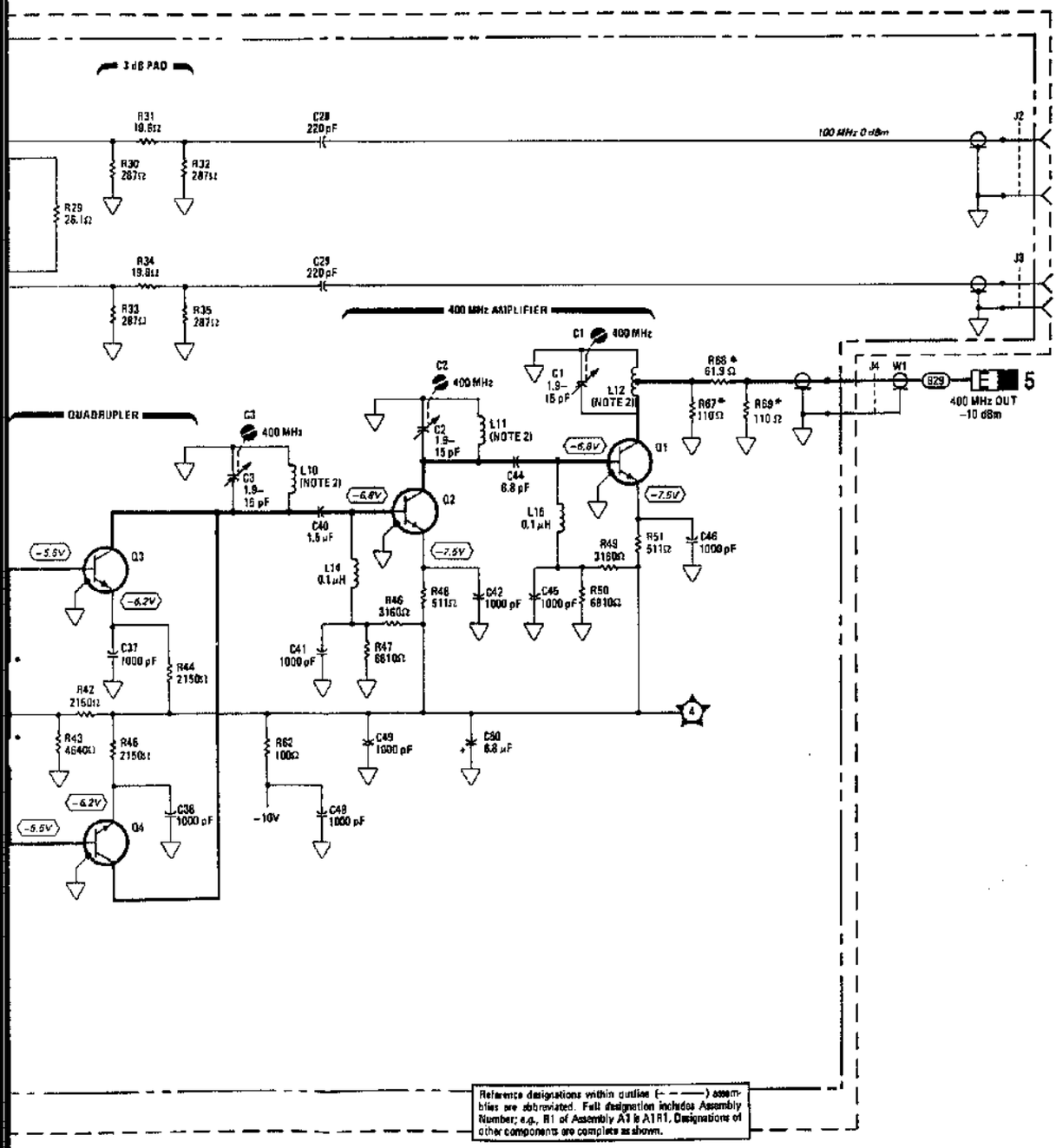


NOTES

1. REFER TO TABLE 8-1 FOR SCHEMATIC DIAGRAM NOTES.
2. A3A1AZL10–12 ARE PART OF CIRCUIT BOARD AND ARE NOT REPLACEABLE.
3. POWER SUPPLY CONNECTIONS TO THE A3A1 ASSEMBLY ARE SHOWN ON SERVICE SHEET 1
* ASTERISK INDICATES SELECTED COMPONENT, AVERAGE VALUES SHOWN.

REFERENCE DESIGNATIONS

| A3 | A3A1A2 |
|---|---|
| AT2<br>J7<br>W7 | C1–56<br>CR1,3,4<br>J1–4 |
| A3A1A1 | L1–12,14,16<br>Q1–11 |
| W9 | R1–62,67–69<br>T1–3<br>TP1–4<br>W1<br>Y1 |
| | A3A1A6 |
| | C3–6<br>XA3A1A2 |

TRANSISTOR PART NUMBERS

| REFERENCE DESIGNATIONS | PART NUMBERS |
|---|---|
| Q1–4,6–9,11 | 1854–0345 |
| Q5 | 1854–0247 |
| Q10 | 1854–0404 |

2
A3A1A2

**Figure 8-204. 100 MHz VCXO Assembly Schematic Diagram**



www.valuetronics.com

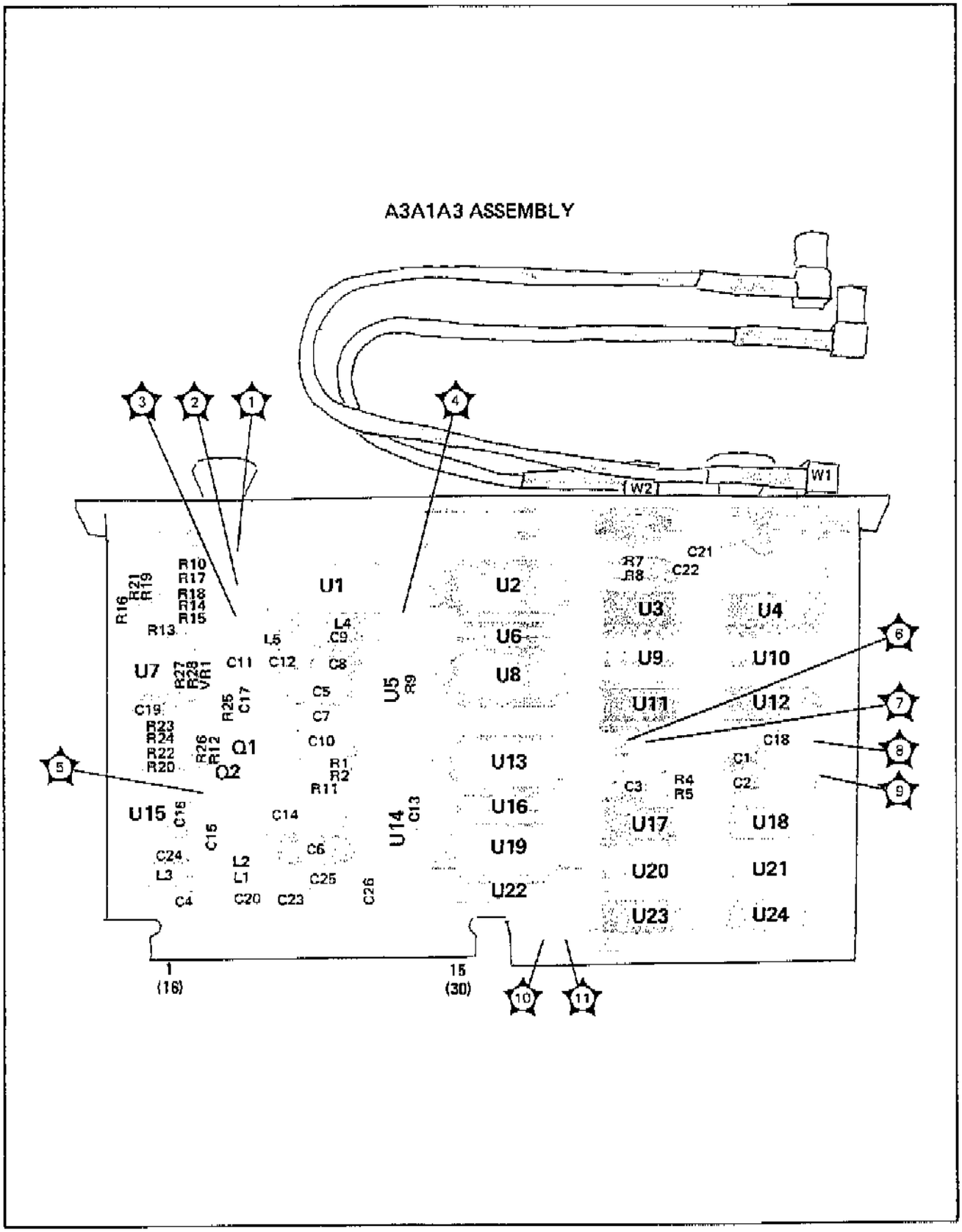


Figure 8-205. A3A1A3 M/N Phase Detector Assembly Component and Test Point Location

8-205a

www.valuetronics.com

FIG. 8-206
Sht 1 of 4

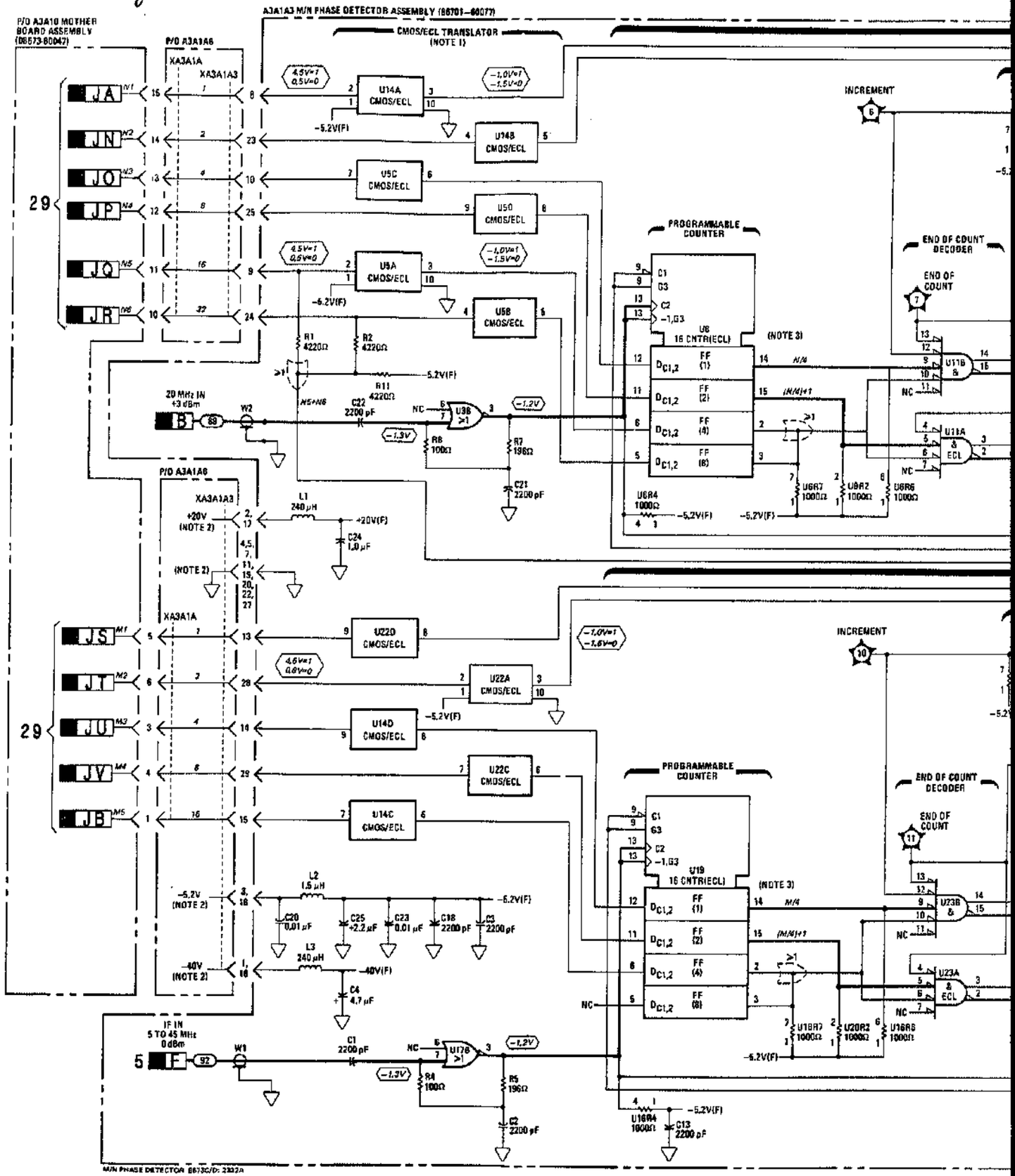


www.valuetronics.com

FIG. 8-206
SHT 2 of 4

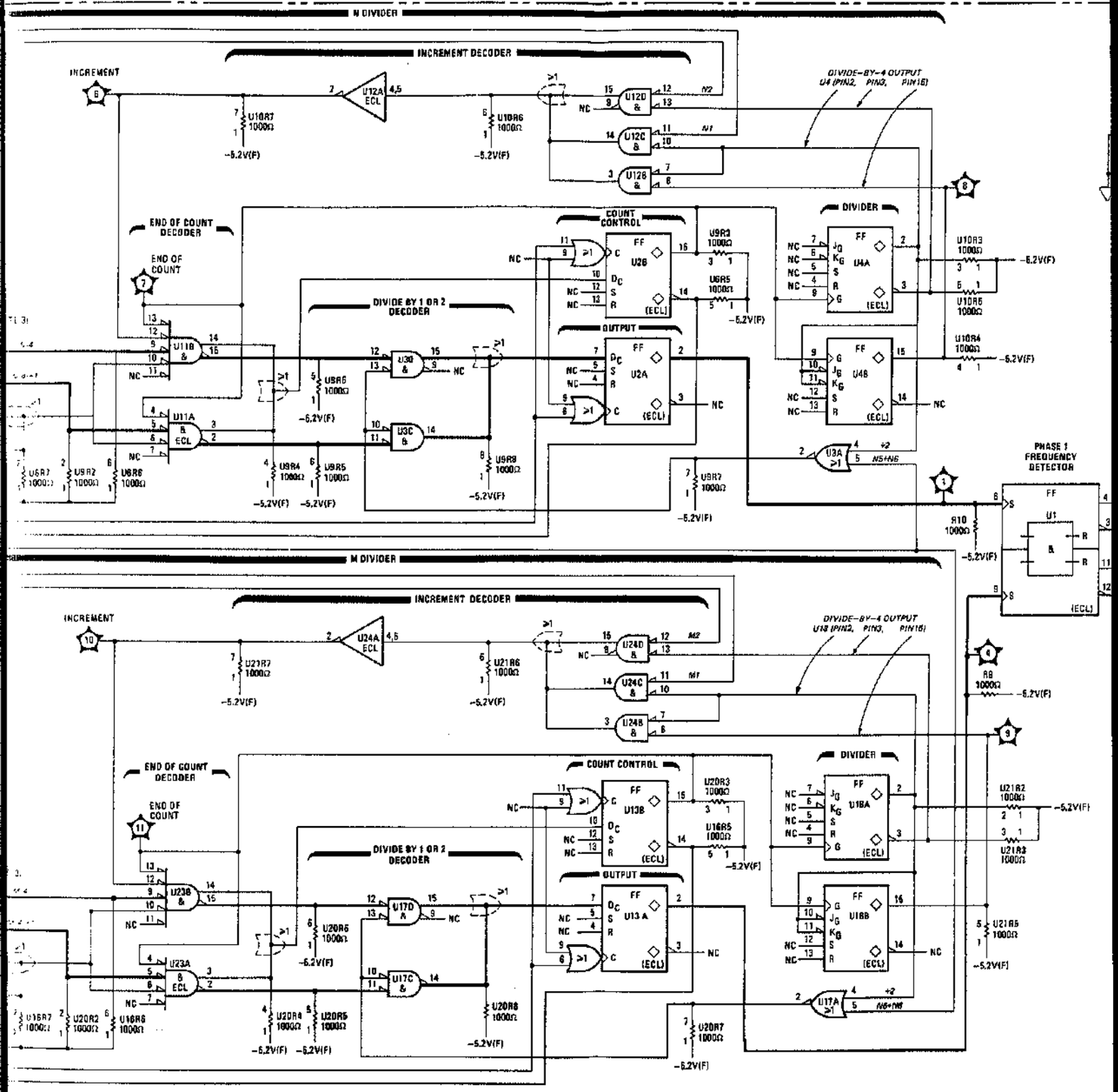


www.valuetronics.com

FIG. 8-206
SHT 3 of 4

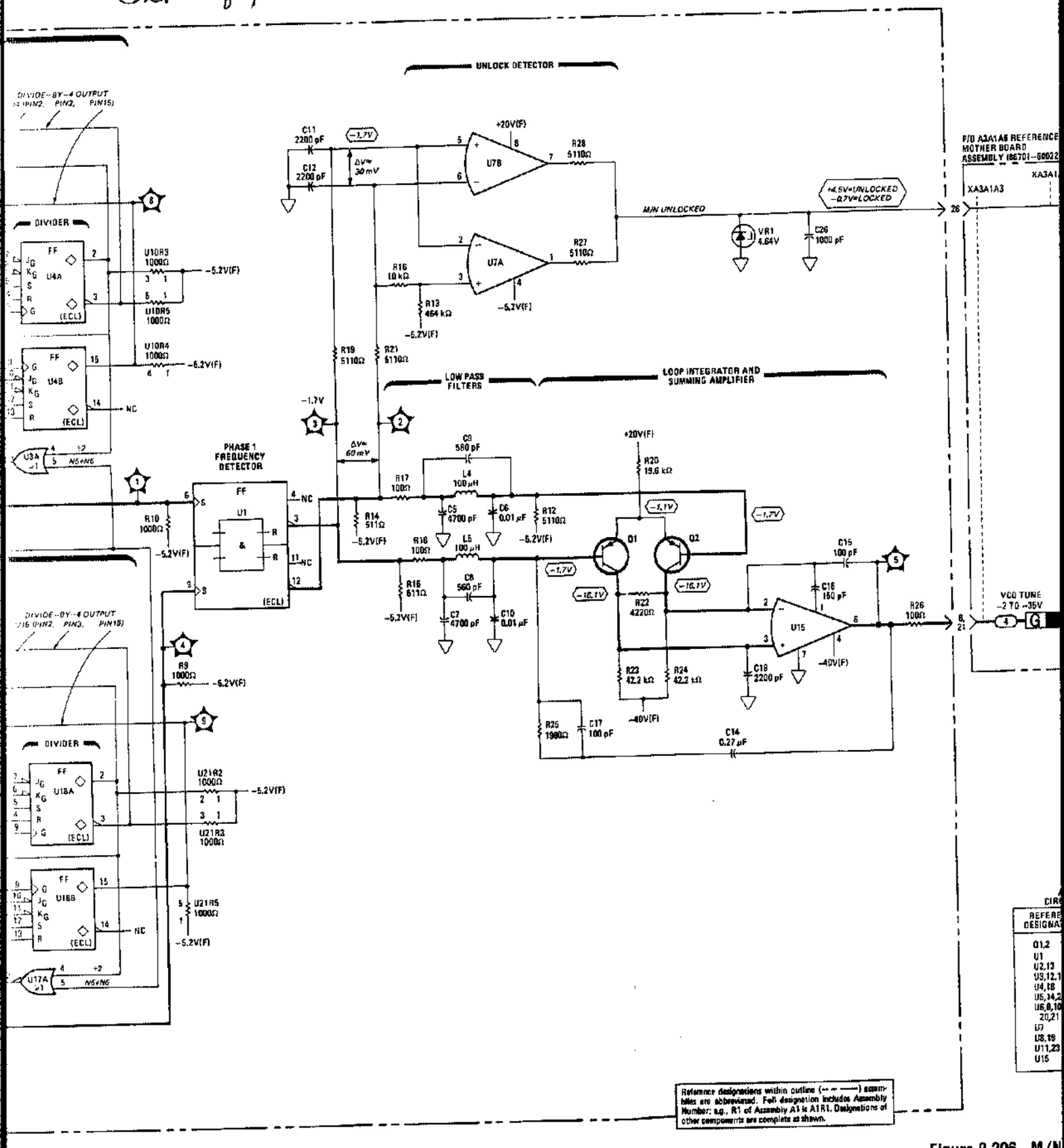


Reference designations within outline (— — —) assemblies are abbreviated. Full designation includes Assembly Number; e.g., R1 of Assembly A1 is A1R1. Designations of other components are complete as shown.

Figure 8-206. M/N

www.valuetronics.com

FIG. 8-206
SHT 4 of 4

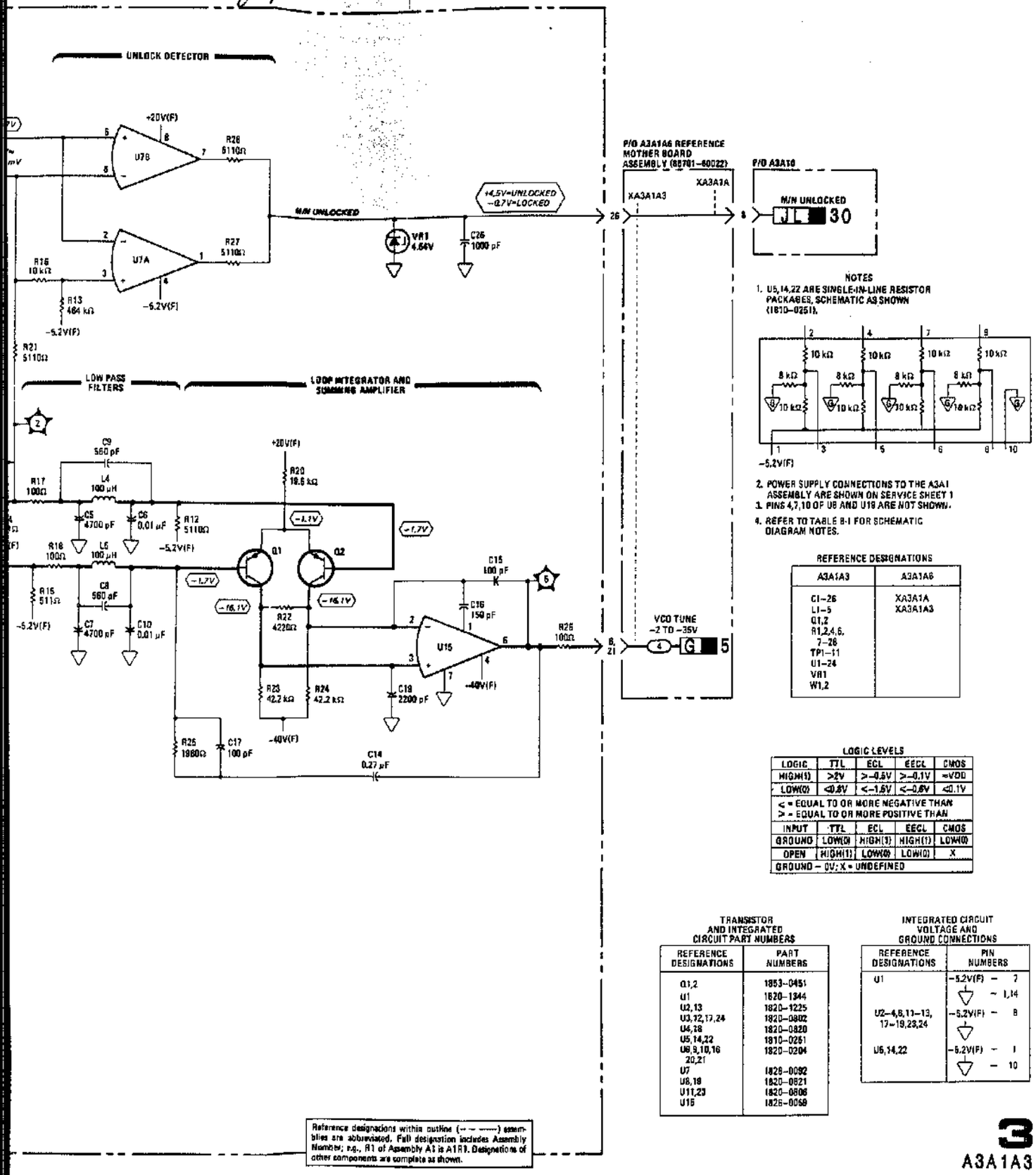


REFERENCE DESIGNATIONS

| A3A1A3 | A3A1A6 |
|---|---|
| C1-26<br>L1-5<br>Q1,2<br>R1,2,4,6,<br>7-26<br>TP1-11<br>U1-24<br>VR1<br>W1,2 | XA3A1A<br>XA3A1A3 |

LOGIC LEVELS

| LOGIC | TTL | ECL | EECL | CMOS |
|---|---|---|---|---|
| HIGH(1) | >2V | >-0.5V | >-0.1V | ≈VDD |
| LOW(0) | <0.8V | <-1.5V | <-0.6V | <0.1V |
| < = EQUAL TO OR MORE NEGATIVE THAN<br>> = EQUAL TO OR MORE POSITIVE THAN | | | | |
| INPUT | TTL | ECL | EECL | CMOS |
| GROUND | LOW(0) | HIGH(1) | HIGH(1) | LOW(0) |
| OPEN | HIGH(1) | LOW(0) | LOW(0) | X |
| GROUND = 0V; X = UNDEFINED | | | | |

TRANSISTOR AND INTEGRATED CIRCUIT PART NUMBERS

| REFERENCE DESIGNATIONS | PART NUMBERS |
|---|---|
| Q1,2 | 1853-0451 |
| U1 | 1820-1344 |
| U2,13 | 1820-1225 |
| U3,12,17,24 | 1820-0802 |
| U4,18 | 1820-0820 |
| U5,14,22 | 1810-0251 |
| U6,9,10,16 20,21 | 1820-0204 |
| U7 | 1826-0092 |
| U8,19 | 1820-0821 |
| U11,23 | 1820-0806 |
| U15 | 1826-0059 |

INTEGRATED CIRCUIT VOLTAGE AND GROUND CONNECTIONS

| REFERENCE DESIGNATIONS | PIN NUMBERS |
|---|---|
| U1 | -5.2V(F) - 7<br>~ 1,14 |
| U2-4,6,11-13, 17-19,23,24 | -5.2V(F) - 8 |
| U5,14,22 | -5.2V(F) - 1<br>- 10 |

Reference designations within outline (-- -- ----) assemblies are abbreviated. Full designation includes Assembly Number; e.g., R1 of Assembly A3 is A1R1. Designations of other components are complete as shown.

3
A3A1A3

Figure 8-206. M/N Phase Detector Assembly Schematic Diagram



www.valuetronics.com

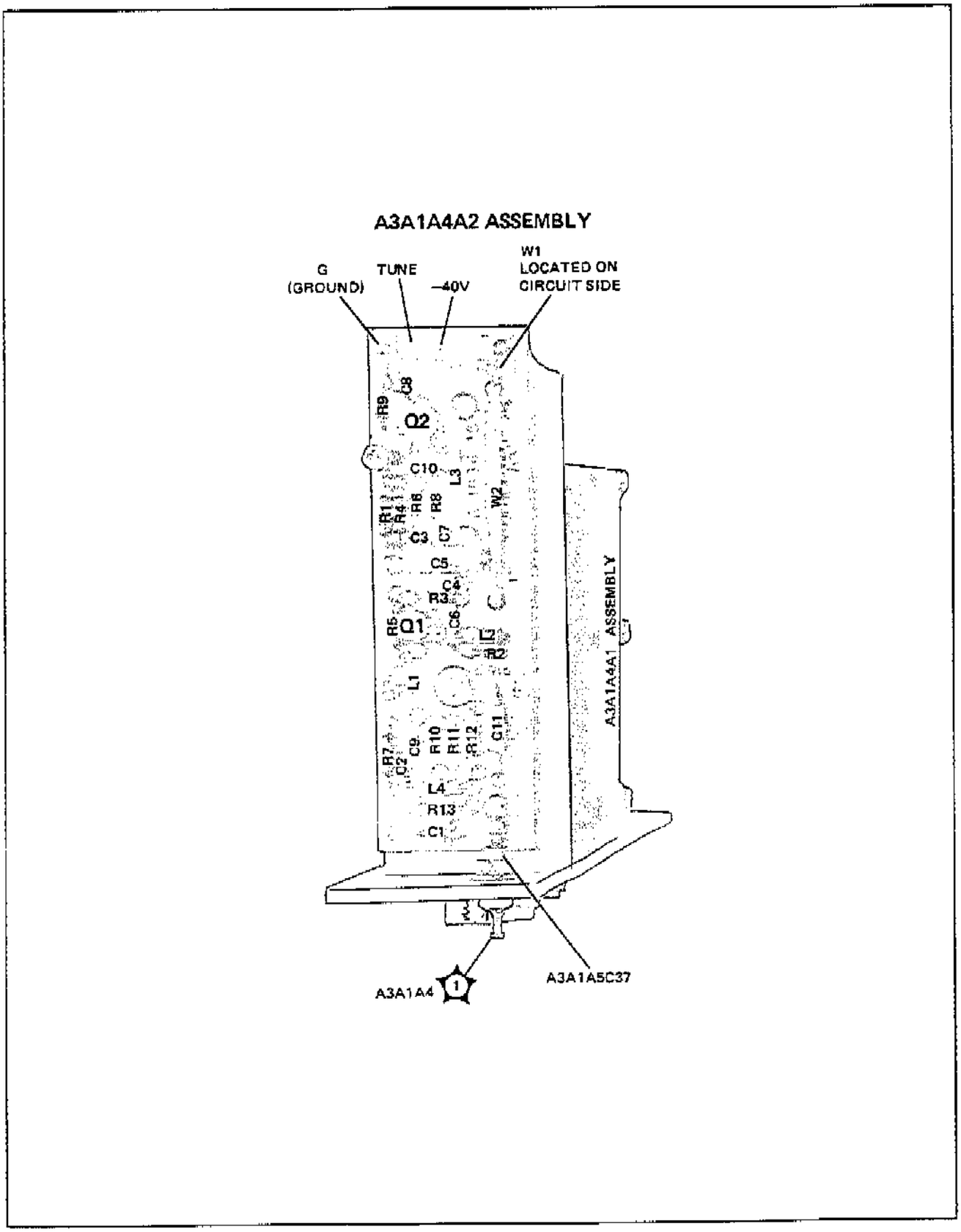


Figure 8-207. A3A1A4A2 M/N VCO Board Assembly Component and Test Point Location

8-207a

www.valuetronics.com

FIG. 8-208
SHT 1 of 2

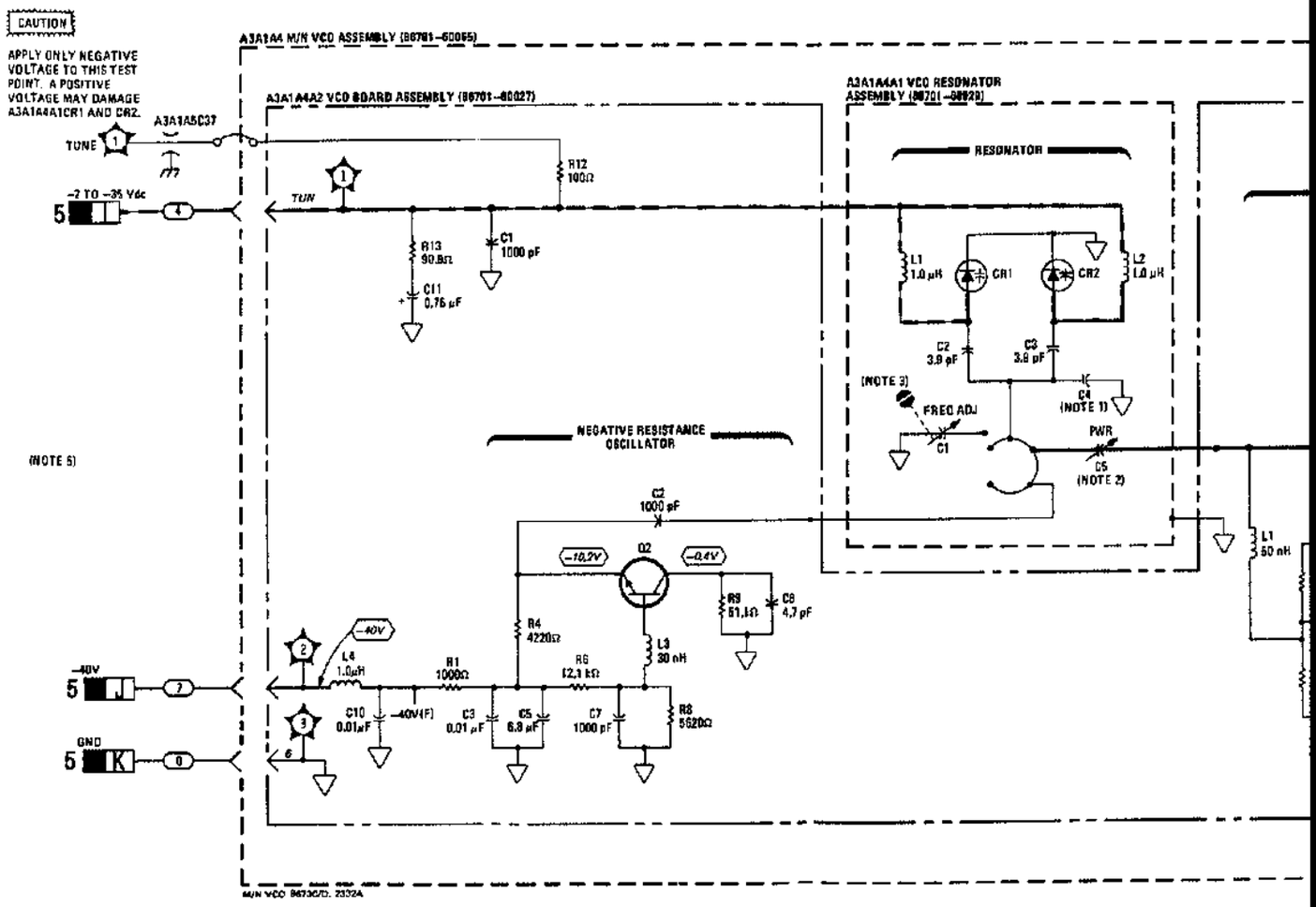


www.valuetronics.com

FIG. 8-208
SHT 2 of 2

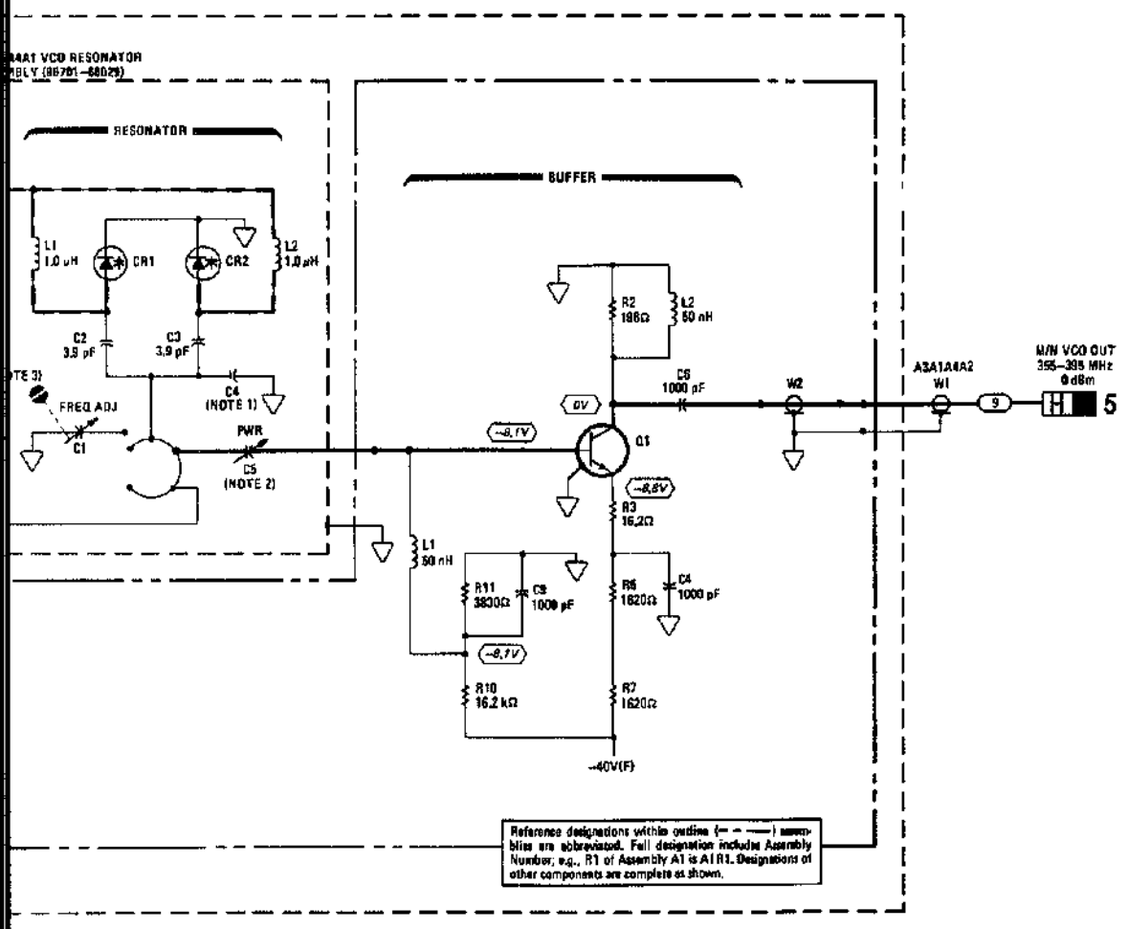


NOTES

1. A3A1A4A1C4 IS AN AIR DIELECTRIC CAPACITOR FORMED BY RESONATOR HOUSING AND RESONATOR CENTER CONDUCTOR.
2. PWR ADJUSTMENT IS AN ADJUSTABLE PROBE MOUNTED ON A3A1A4A2 AND EXTENDING INTO THE VCO RESONATOR ASSEMBLY.
3. ADJUSTMENT SCREW LOCATED ON COVER OF M/N OUTPUT ASSEMBLY A3A1A5.
4. REFER TO TABLE 8-1 FOR SCHEMATIC DIAGRAM NOTES.
5. POWER SUPPLY CONNECTIONS TO THE MOTHERBOARD ASSEMBLY ARE SHOWN ON SERVICE SHEET 1.

REFERENCE DESIGNATIONS

| A3A1A4A1 | A3A1A4A2 |
|---|---|
| C1–5<br>CR1,2<br>L1,2 | C1–11<br>L1–4<br>Q1,2<br>R1–13<br>TP1<br>W1,2 |
| A3A1A5 | |
| C37 | |

TRANSISTOR PART NUMBERS

| REFERENCE DESIGNATIONS | PART NUMBERS |
|---|---|
| Q1 | 1854–0810 |
| Q2 | 1854–0686 |

4
A3A1A4

**Figure 8-208. M/N VCO Assembly Schematic Diagram**



www.valuetronics.com

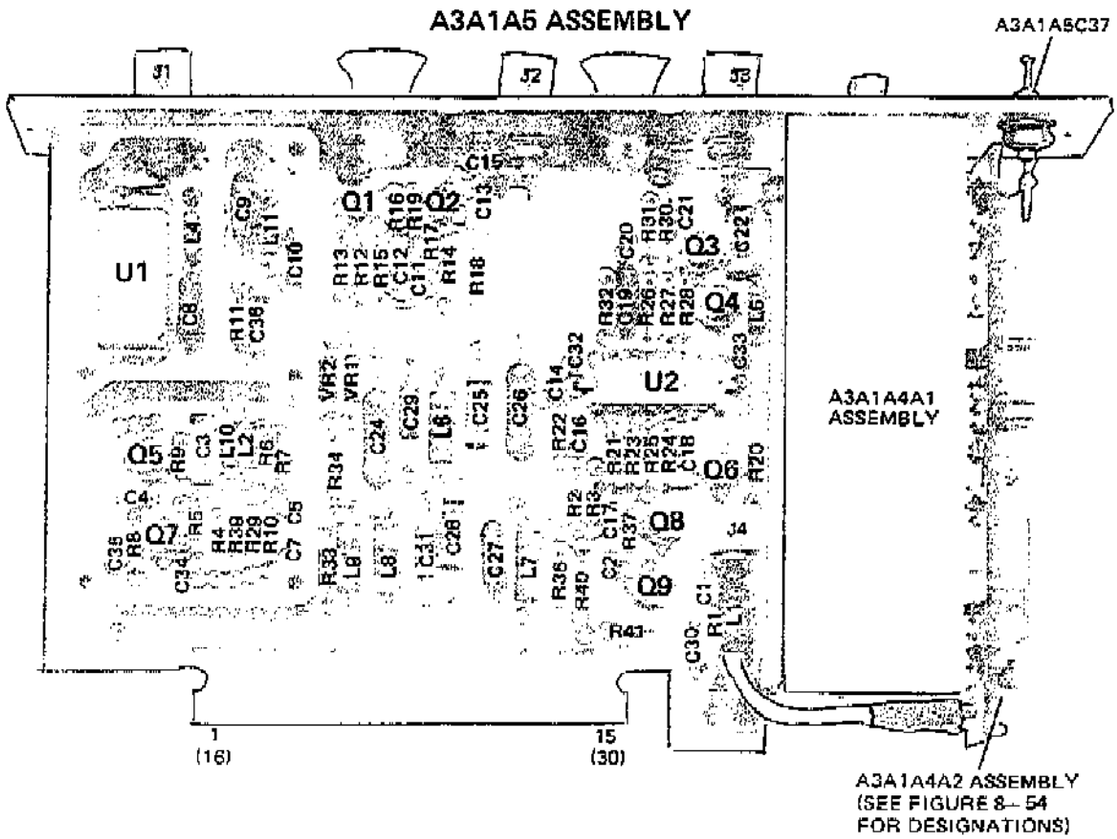


Figure 8-209. A3A1A5 M/N Output Assembly Component and Test Point Location

8-209a

www.valuetronics.com

FIG. 8-210
Sht 1 of 2

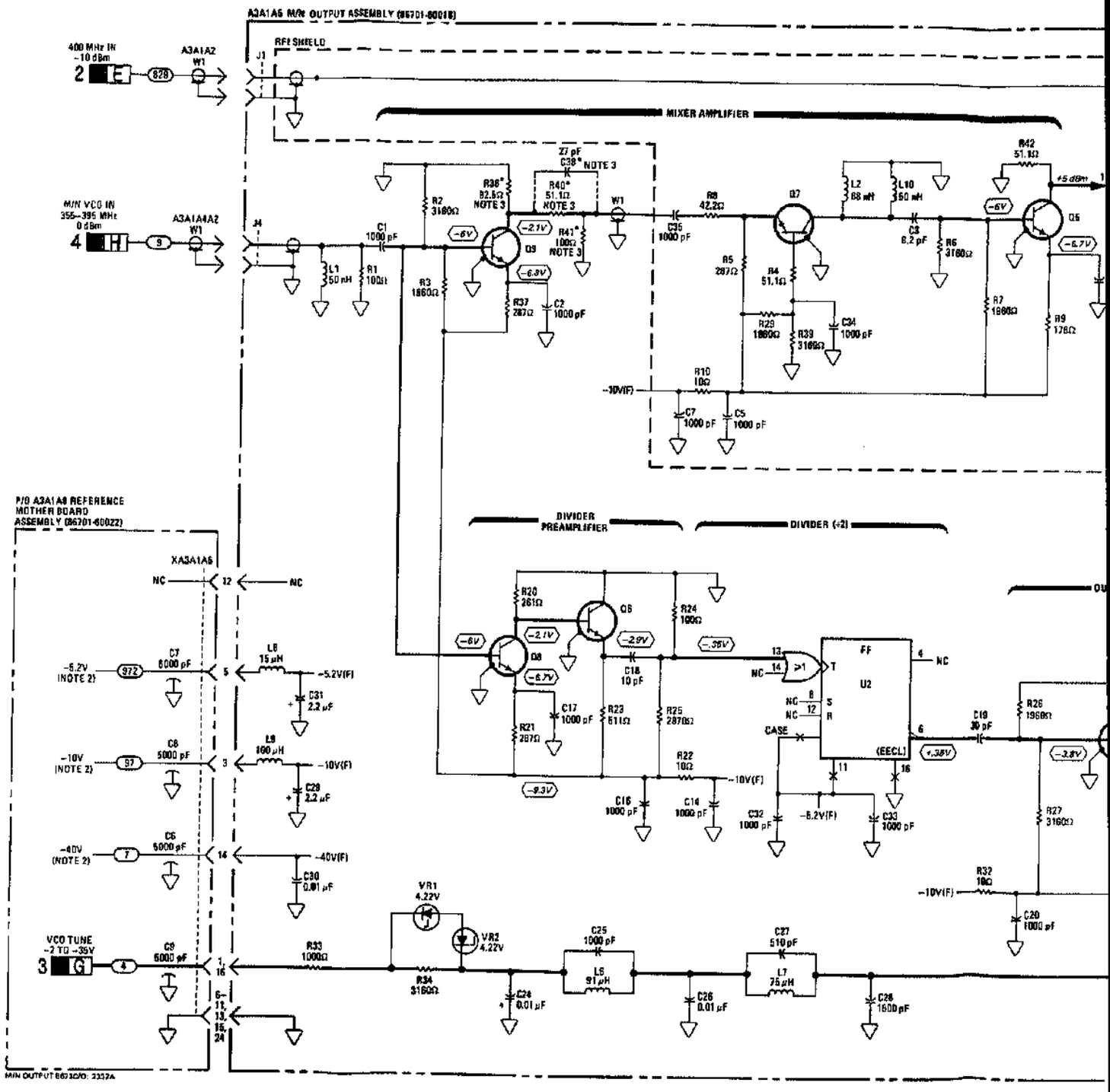


www.valuetronics.com

FIG. 8-210
Sht 2 of 2

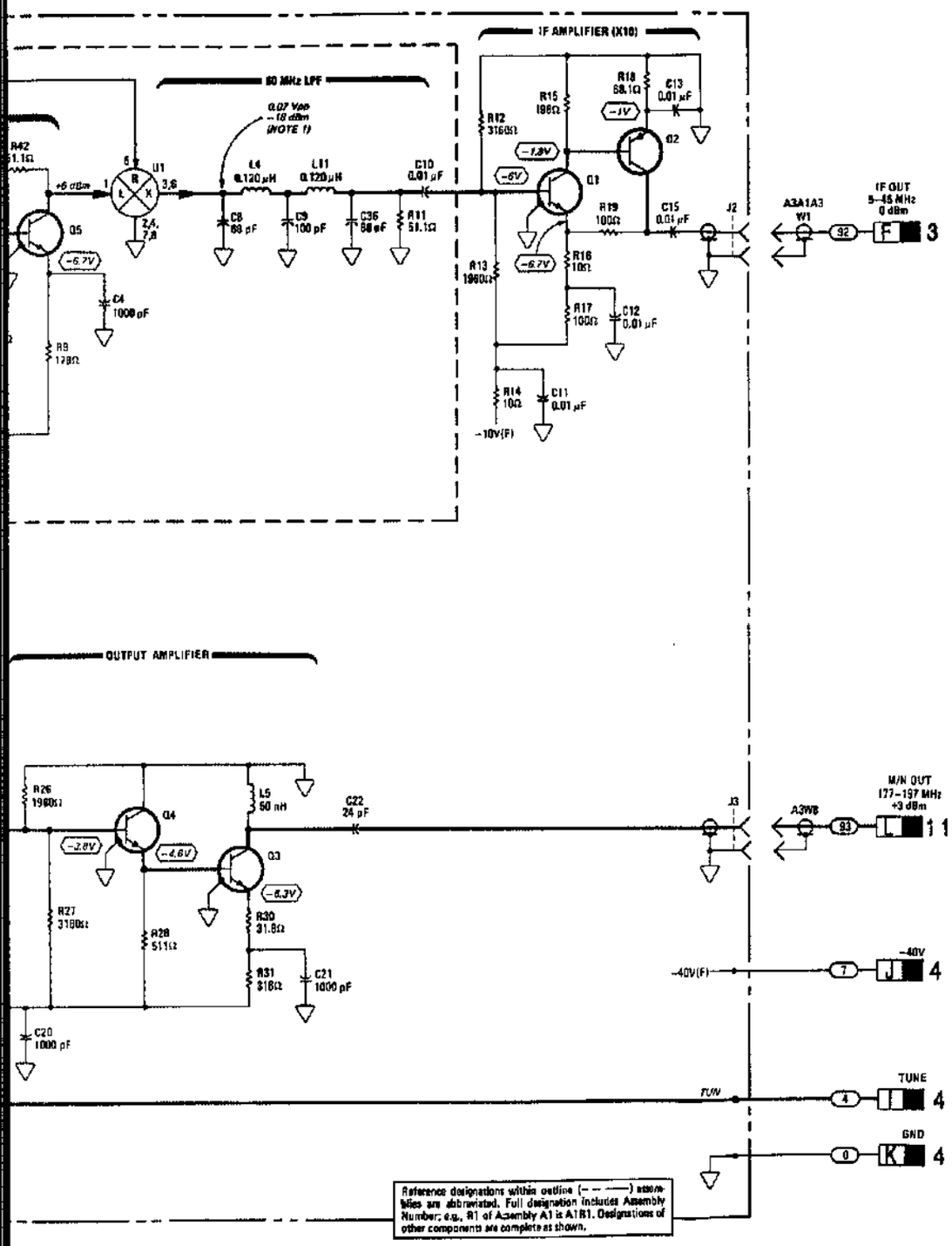


Reference designations within outline (— — —) assemblies are abbreviated. Full designation includes Assembly Number; e.g., R1 of Assembly A1 is A1R1. Designations of other components are complete as shown.

NOTES

1. MEASURED WITH SPECTRUM ANALYZER HIGH IMPEDANCE PROBE.
2. POWER SUPPLY CONNECTIONS TO THE A3A1 ASSEMBLY ARE SHOWN ON SERVICE SHEET 1
* ASTERISK INDICATES SELECTED COMPONENTS. NOMINAL VALUES SHOWN. EITHER R49 OR C38 WILL BE USED IN ANY INSTRUMENT. SELECTION IS COVERED IN SECTION V.
3. REFER TO TABLE 8-I FOR SCHEMATIC DIAGRAM NOTES.

REFERENCE DESIGNATIONS

| A3 | A3A1A5 |
|---|---|
| W8 | C1–6,7–22, 24–36,38 |
| A3A1A2 | J1–4 |
| W1 | L1,2,4–11 |
| A3A1A3 | Q1–9 |
| W7 | R1–34,36, 37,39–42 |
| A3A1A4A2 | U1,2 |
| W1 | VR1,2 |
| | W1 |
| W1 | A3A1A6 |
| | C6–9 |
| | XA3A1A5 |

DELETED: A3A1A5C6,C38,L3,L12, R35,R36

LOGIC LEVELS

| LOGIC | TTL | ECL | EECL | CMOS |
|---|---|---|---|---|
| HIGH(1) | >2V | >–0.5V | >–0.3V | ≈VDD |
| LOW(0) | <0.8V | <–1.5V | <–0.6V | <0.1V |

≤ = EQUAL TO OR MORE NEGATIVE THAN
≥ = EQUAL TO OR MORE POSITIVE THAN

| INPUT | TTL | ECL | EECL | CMOS |
|---|---|---|---|---|
| GROUND | LOW(0) | HIGH(1) | HIGH(1) | LOW(0) |
| OPEN | HIGH(1) | LOW(0) | LOW(0) | X |

GROUND = 0V; X = UNDEFINED

TRANSISTOR AND INTEGRATED CIRCUIT PART NUMBERS

| REFERENCE DESIGNATIONS | PART NUMBERS |
|---|---|
| Q1,3,4 | 1854–0345 |
| Q2 | 1853–0015 |
| Q5-9 | 1854–0546 |
| U1 | 0955–0063 |
| U2 | 1820–2642 |

5
A3A1A5

**Figure 8-210 M/N Output Assembly Schematic Diagram**



www.valuetronics.com

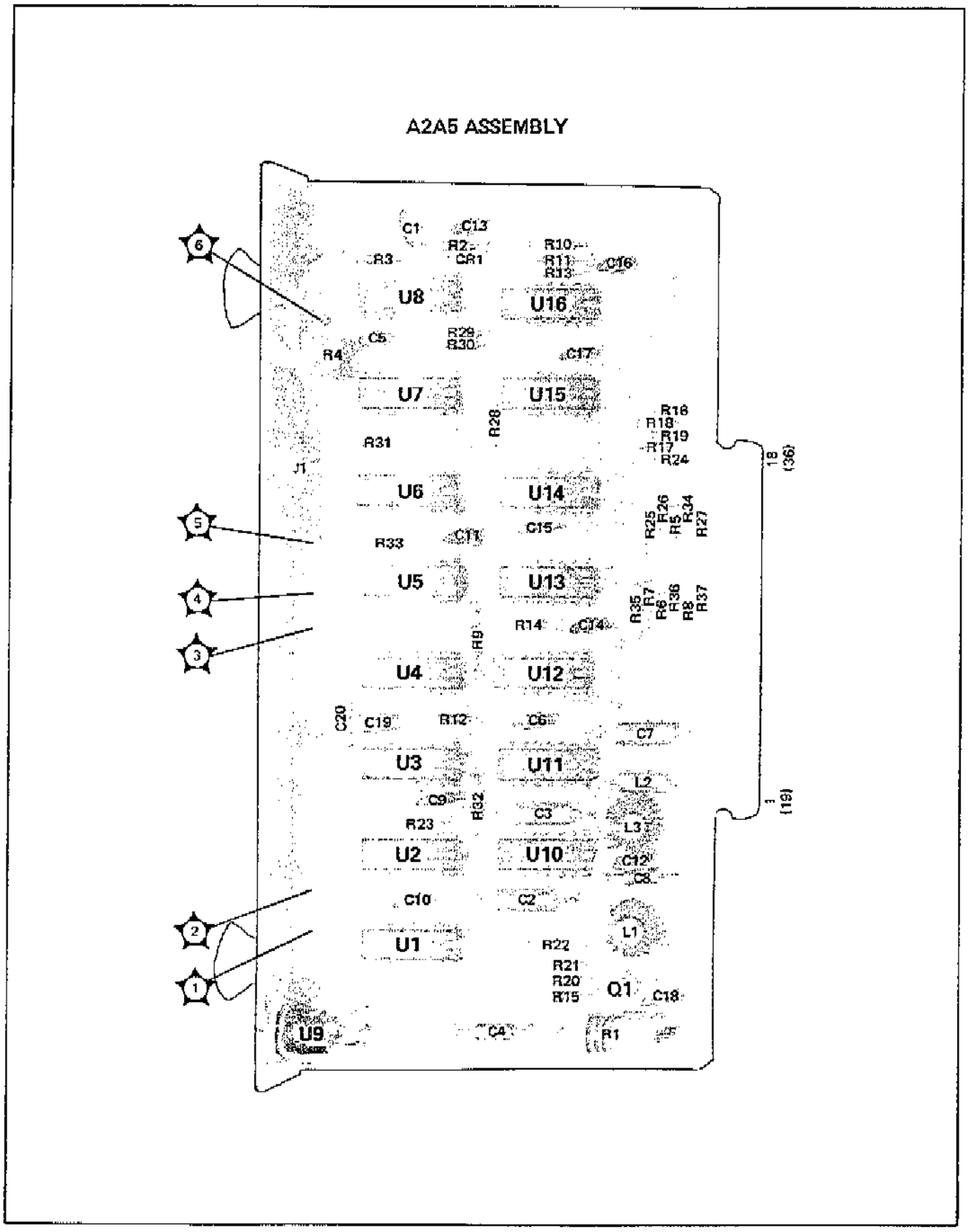


Figure 8-211. A2A5 20/30 Divider Assembly Component and Test Point Location

8-211a

www.valuetronics.com

FIG. 8-212
Sht 1 of 3

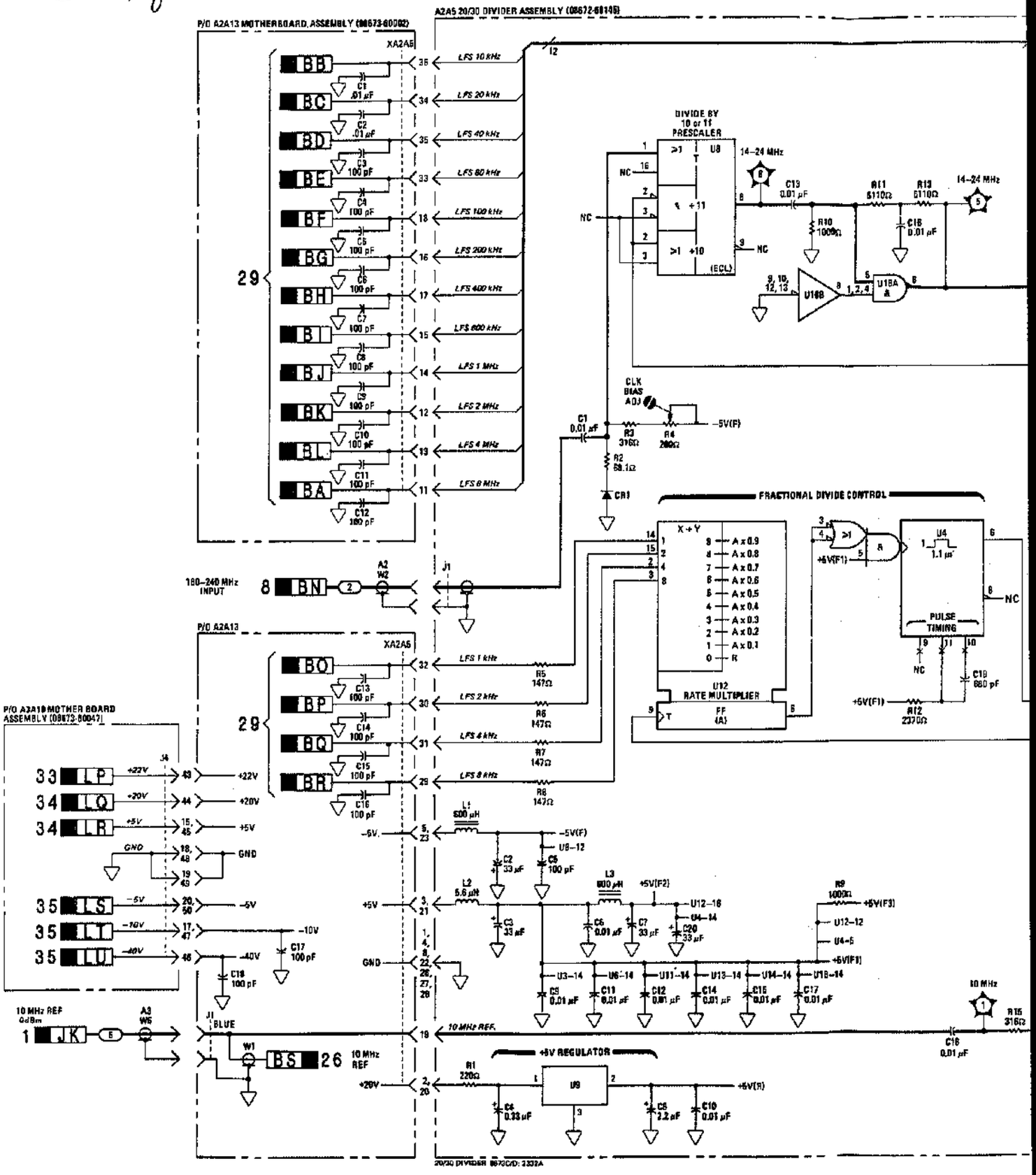


www.valuetronics.com

FIG. 8-212
Sht 2 of 3

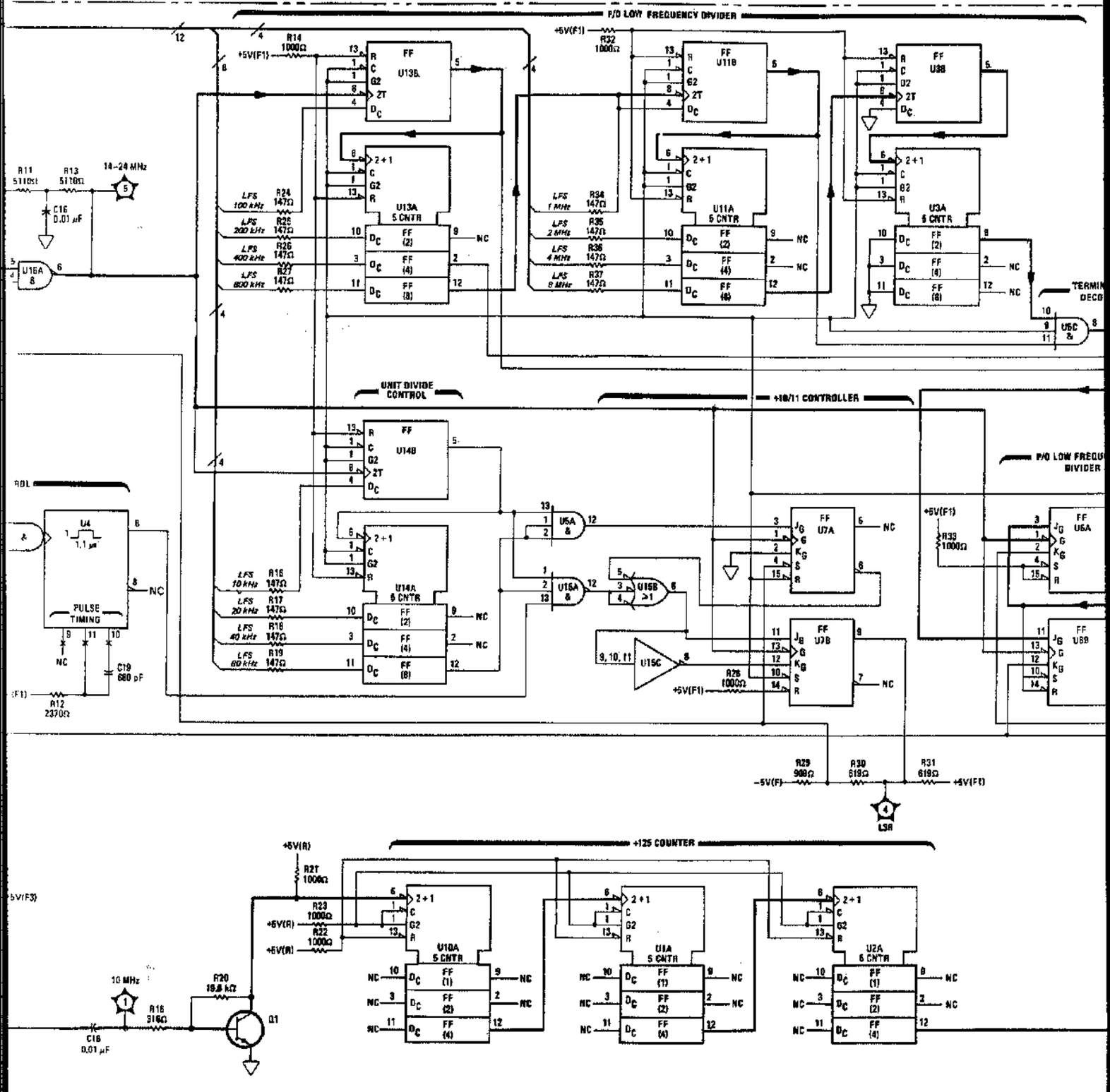


Reference designations within our
tiles are abbreviated. Full design
Number; e.g., R1 of Assembly A1
other components are complete as

www.valuetronics.com

FIG. 8-212
SHT 3 of 3

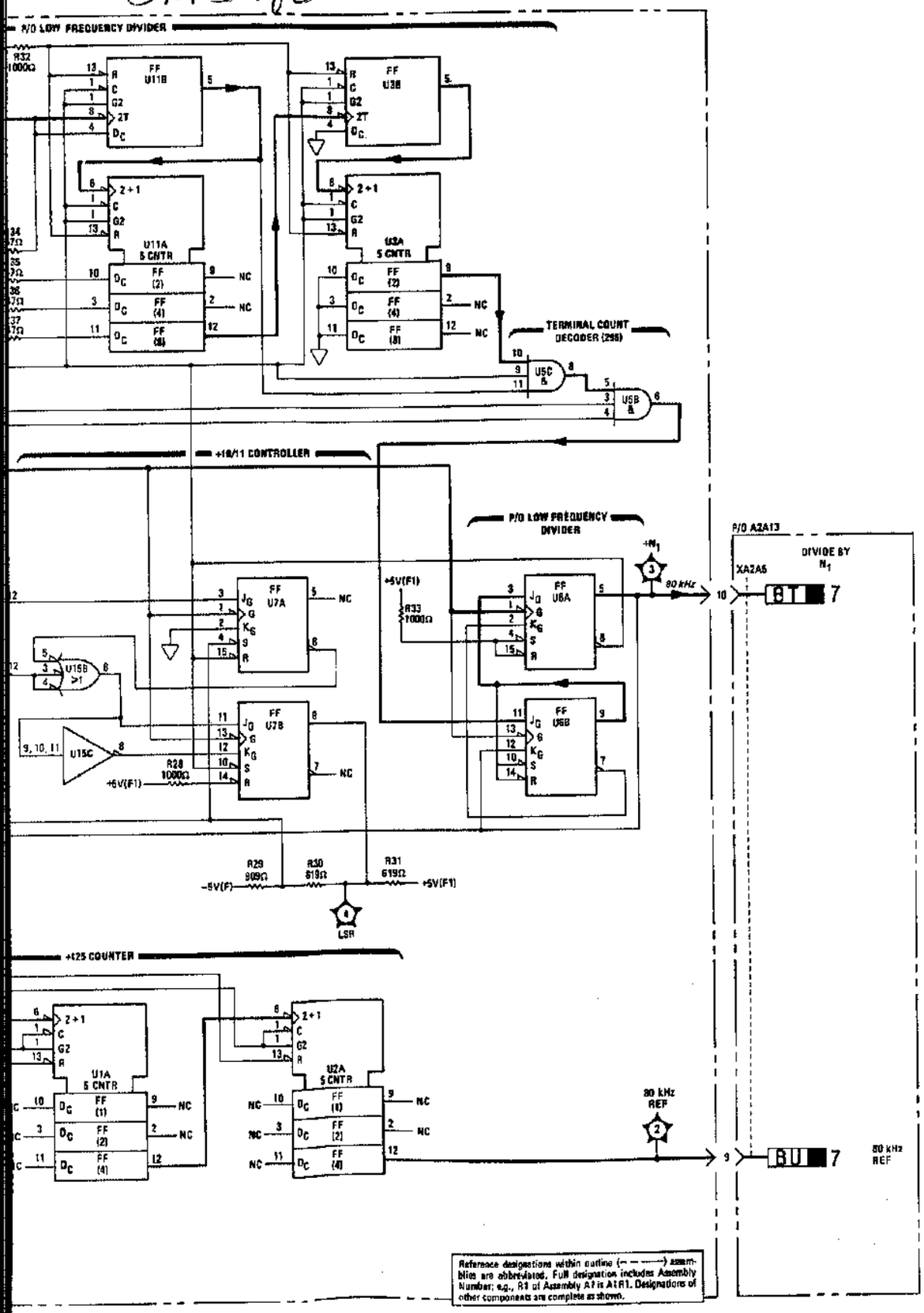


NOTES

1. REFER TO TABLE 8-1 FOR SCHEMATIC DIAGRAM NOTES.

REFERENCE DESIGNATIONS

| | |
|---|---|
| A2 | A2A13 |
| W2 | C1–19<br>J2<br>W1<br>XA2A5 |
| A2A5 | |
| C1–20<br>CR1<br>J1<br>L1–3<br>Q1<br>R1–37<br>TP1–6<br>U1–16 | A3<br>W3<br>A3A10<br>J3 |

LOGIC LEVELS

| LOGIC | TTL | ECL | EECL | CMOS |
|---|---|---|---|---|
| HIGH (1) | >2V | >–0.5V | >–0.1V | ≈VDD |
| LOW (0) | <0.8V | <–1.5V | <–0.8V | <0.1V |

< = EQUAL TO OR MORE NEGATIVE THAN
> = EQUAL TO OR MORE POSITIVE THAN

| INPUT | TTL | ECL | EECL | CMOS |
|---|---|---|---|---|
| GROUND | LOW (0) | HIGH (1) | HIGH (1) | LOW (0) |
| OPEN | HIGH (1) | LOW (0) | LOW (0) | X |

GROUND = 0V; X = UNDEFINED

TRANSISTOR AND INTEGRATED CIRCUIT PART NUMBERS

| REFERENCE DESIGNATIONS | PART NUMBERS |
|---|---|
| Q1 | 1854-0019 |
| U1–3, 10, 11 | 1820-1281 |
| U4 | 1820-0281 |
| U5 | 1820-0686 |
| U6, 7 | 1820-0829 |
| U8 | 1820-1384 |
| U9 | 1820-0429 |
| U12 | 1820-0809 |
| U13, 14 | 1820-0761 |
| U15 | 1820-0685 |
| U16 | 1820-0690 |

INTEGRATED CIRCUIT VOLTAGE AND GROUND CONNECTIONS

| REFERENCE DESIGNATIONS | PIN NUMBERS |
|---|---|
| U1, 2, 10 | +5V(R) – 14<br>▽ – 7 |
| U3, 5, 11, 13–16 | +5V(F1) – 14<br>▽ – 7 |
| U4 | +5V(F2) – 14<br>▽ – 7 |
| U6, 7 | +5V(F1) – 16<br>▽ – 8 |
| U8 | –5V(F) – 12<br>▽ – 5 |
| U12 | +5V(F2) – 16<br>+5V(F3) – 12<br>▽ – 8 |

6
A2A5

Figure 8-212. 20/30 Divider Assembly Schematic Diagram



www.valuetronics.com

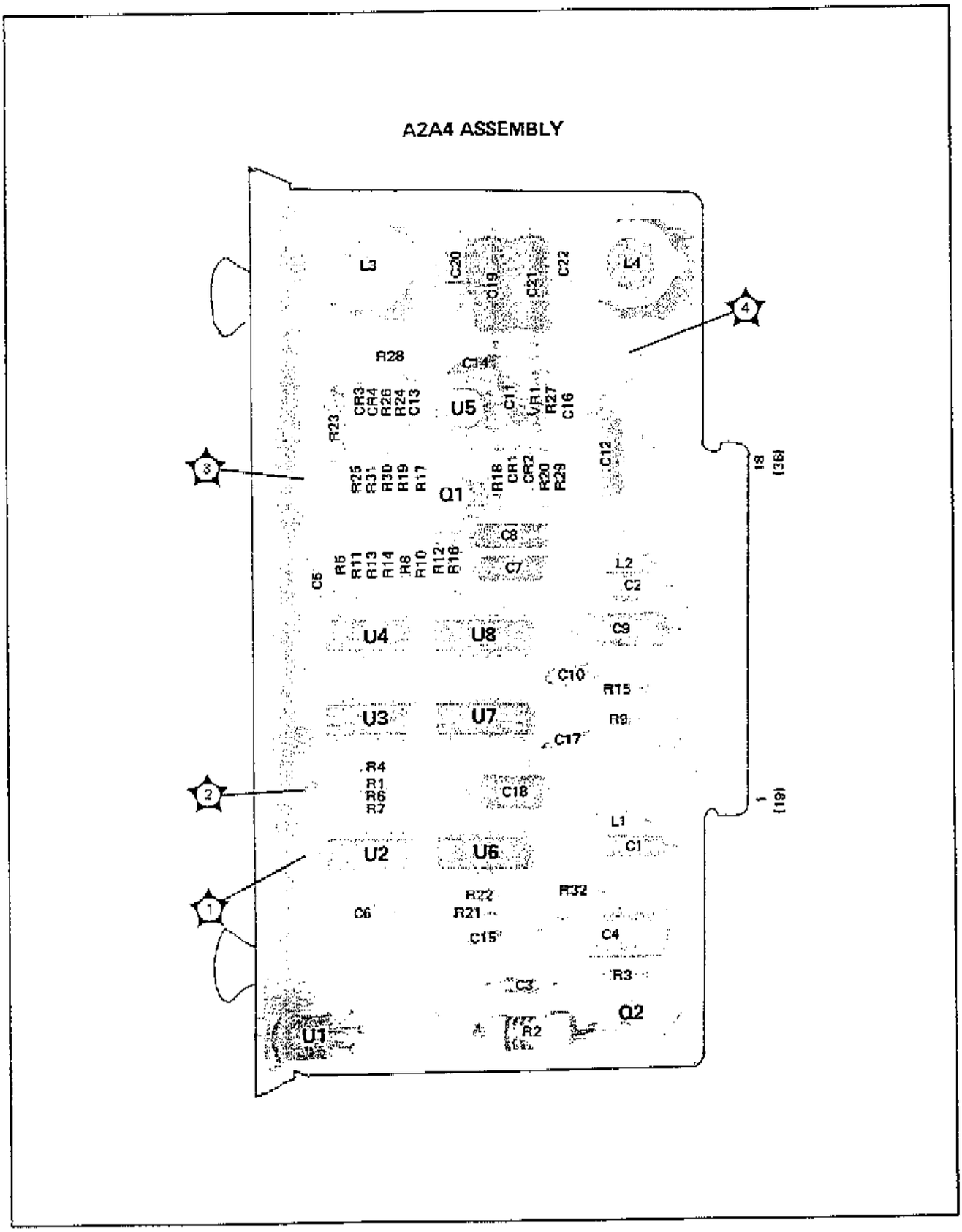


Figure 8-213. A2A4 20/30 Phase Detector Assembly Component and Test Point Location

8-213a

www.valuetronics.com

FIG. 8-214
Sht 1 of 3

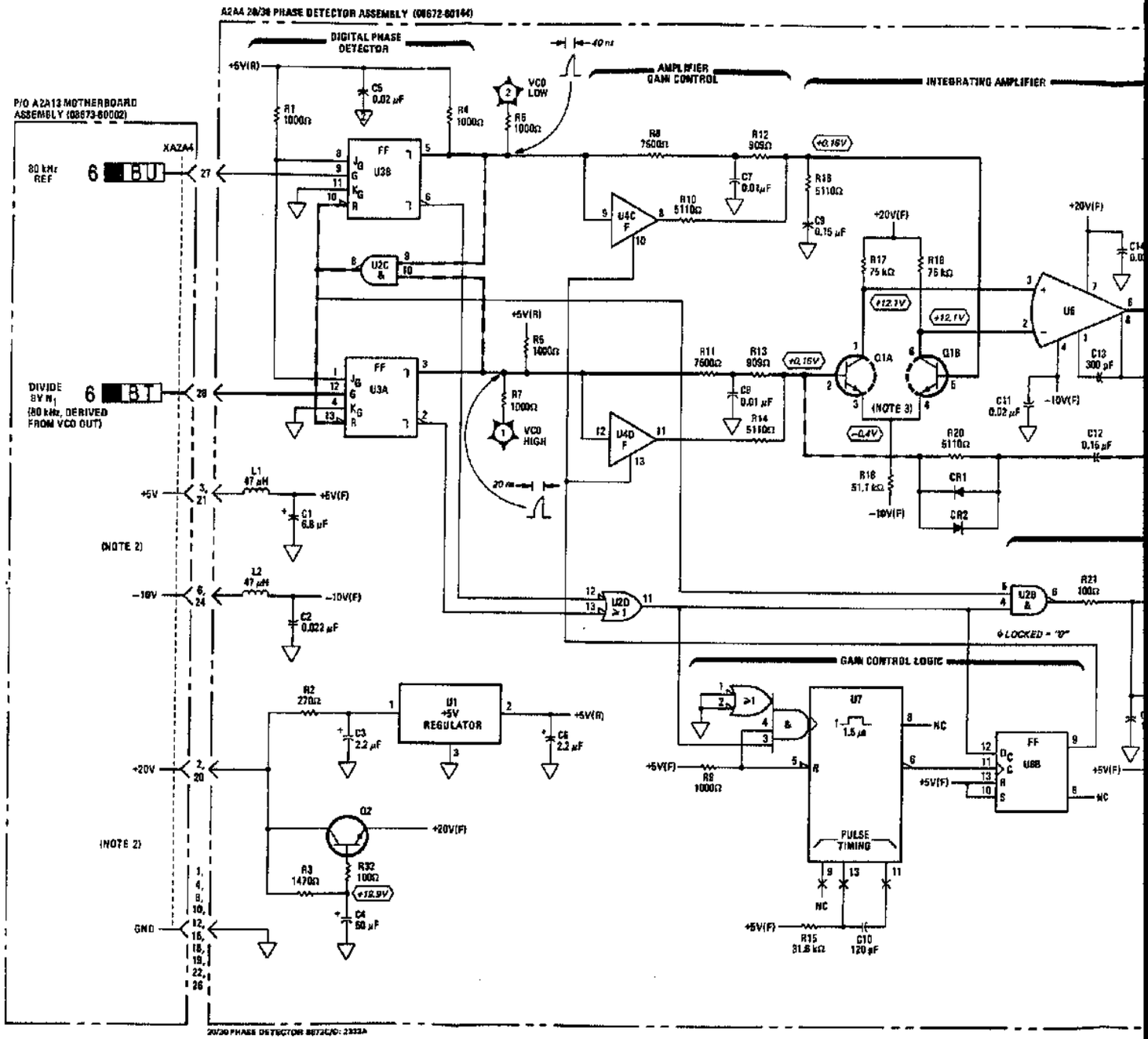


www.valuetronics.com

FIG. 8-214
SHT 2 of 3

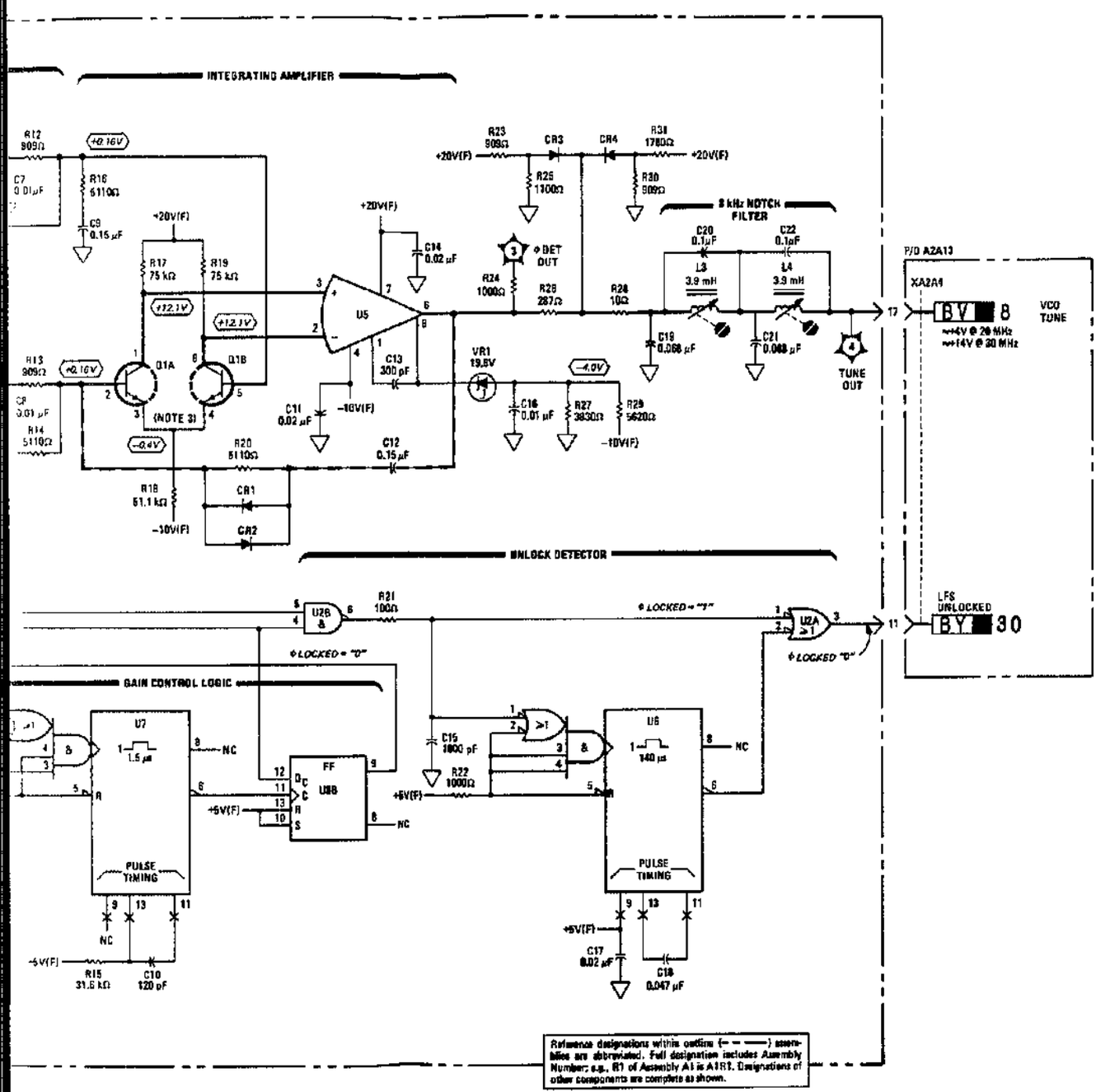


Figure 8-214. 20/30

www.valuetronics.com

FIG. 8-214
SHT 3 of 3

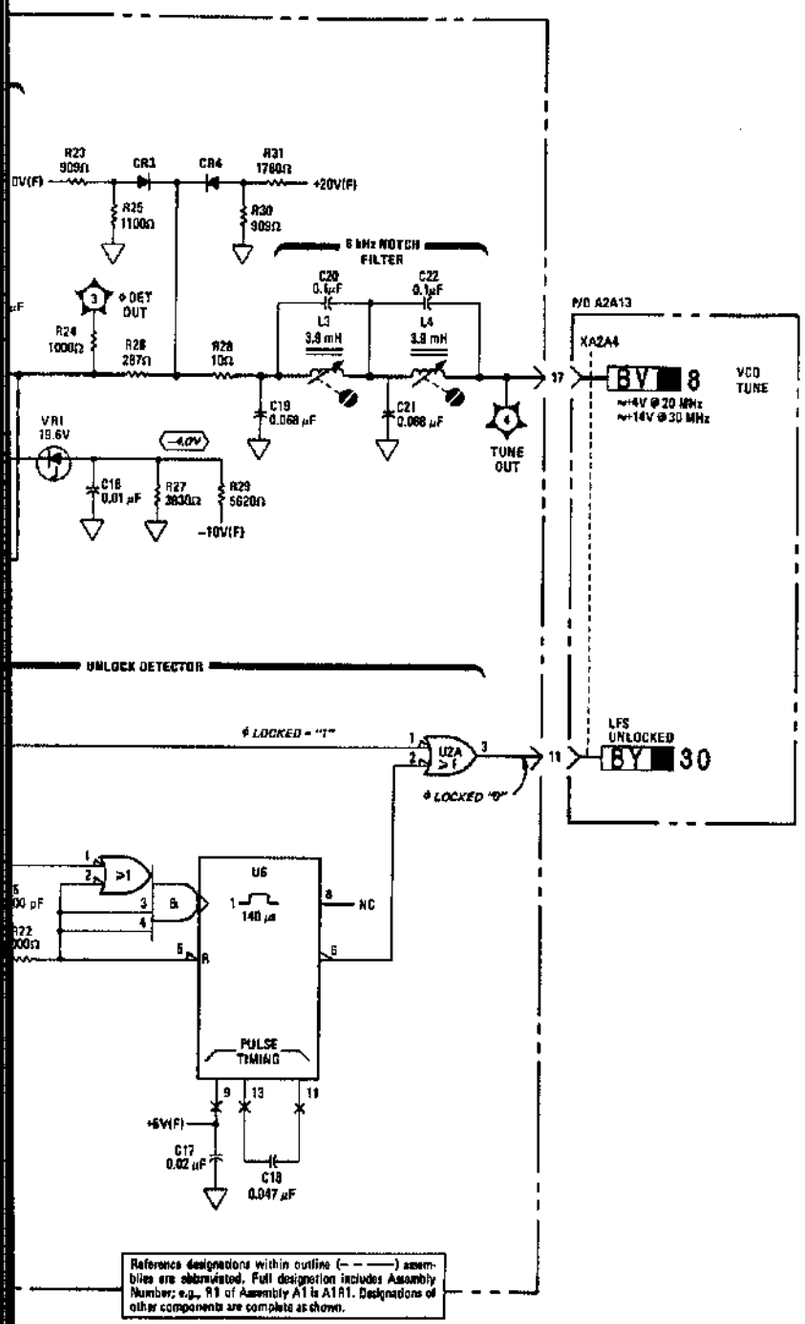


Reference designations within outline (– – ——) assemblies are abbreviated. Full designation includes Assembly Number; e.g., R1 of Assembly A1 is A1R1. Designations of other components are complete as shown.

NOTES

1. REFER TO TABLE 8-1 FOR SCHEMATIC DIAGRAM NOTES.
2. POWER SUPPLY CONNECTIONS TO THE A2 ASSEMBLY ARE SHOWN ON SERVICE SHEET 8
3. REFER TO THE FOLLOWING DIAGRAM FOR PIN LOCATIONS.

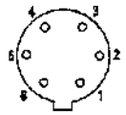


A2A4Q1
TOP VIEW

REFERENCE DESIGNATIONS

| A2A4 | A2A13 |
|---|---|
| C1–22<br>CR1–4<br>L1–4<br>Q1–2<br>R1–32<br>TP1–4<br>U1–8<br>VR1 | XA2A4 |

LOGIC LEVELS

| LOGIC | TTL | ECL | EECL | CMOS |
|---|---|---|---|---|
| HIGH (1) | >2V | >–0.5V | >–0.1V | =VDD |
| LOW (0) | <0.8V | <–1.5V | <–0.5V | <0.1V |
| <= EQUAL TO OR MORE NEGATIVE THAN<br>>= EQUAL TO OR MORE POSITIVE THAN | | | | |
| INPUT | TTL | ECL | EECL | CMOS |
| GROUND | LOW (0) | HIGH (1) | HIGH (1) | LOW (0) |
| OPEN | HIGH (1) | LOW (0) | LOW (0) | X |
| GROUND – 0V; X = UNDEFINED | | | | |

TRANSISTOR AND INTEGRATED CIRCUIT PART NUMBERS

| REFERENCE DESIGNATIONS | PART NUMBERS |
|---|---|
| Q1 | 1854-0712 |
| Q2 | 1854-0071 |
| U1 | 1820-0429 |
| U2 | 1820-2197 |
| U3 | 1820-0281 |
| U4 | 1820-0848 |
| U5 | 1820-0223 |
| U6–7 | 1820-1422 |
| U8 | 1820-1112 |

INTEGRATED CIRCUIT VOLTAGE AND GROUND CONNECTIONS

| REFERENCE DESIGNATIONS | PIN NUMBERS | |
|---|---|---|
| U2, 3 | +5V(R) | 14 |
| | ▽ | 7 |
| U4, 8 | +5V(F) | 14 |
| | ▽ | 7 |
| U6, 7 | +5V(F) | 16 |
| | ▽ | 7 |

7
A2A4

Figure 8-214. 20/30 Phase Detector Assembly Schematic Diagram



www.valuetronics.com

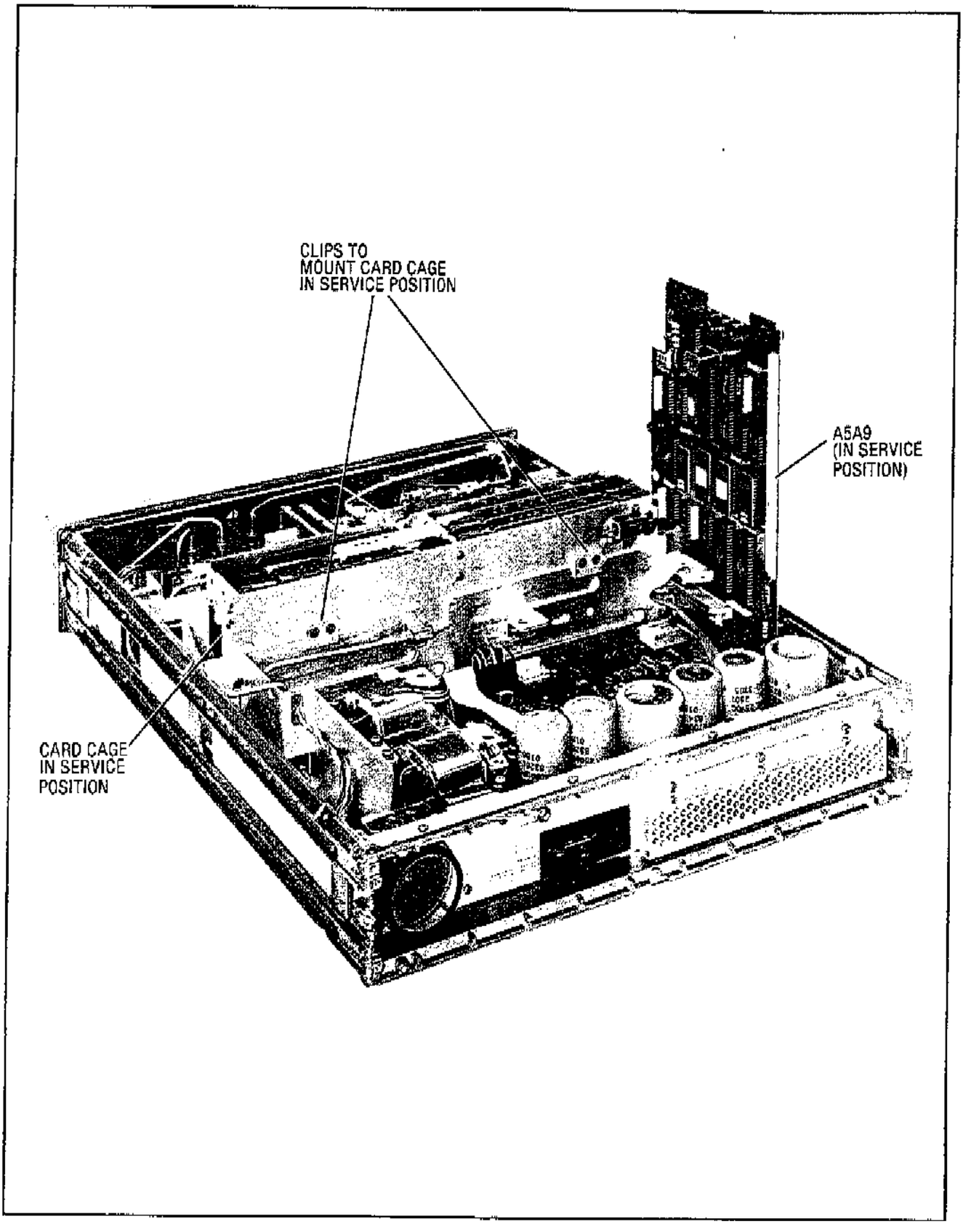


Figure 8-308. A5 Card Cage and Processor Board in Service Position

8-303/8-304b

www.valuetronics.com

FIG. 8-216
SHT 1 of 3

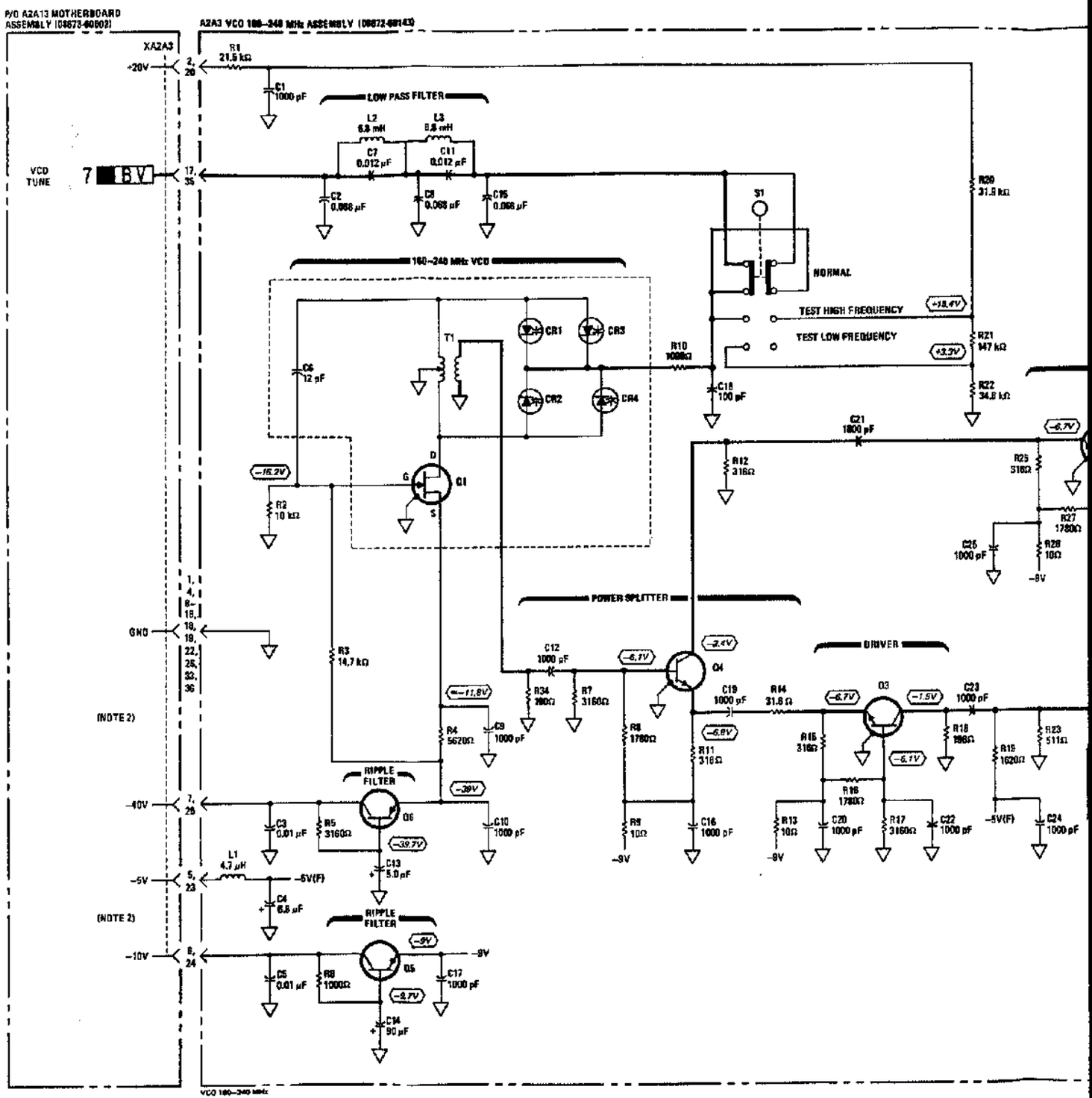


www.valuetronics.com

FIG. 8-216
Sht 2 of 3

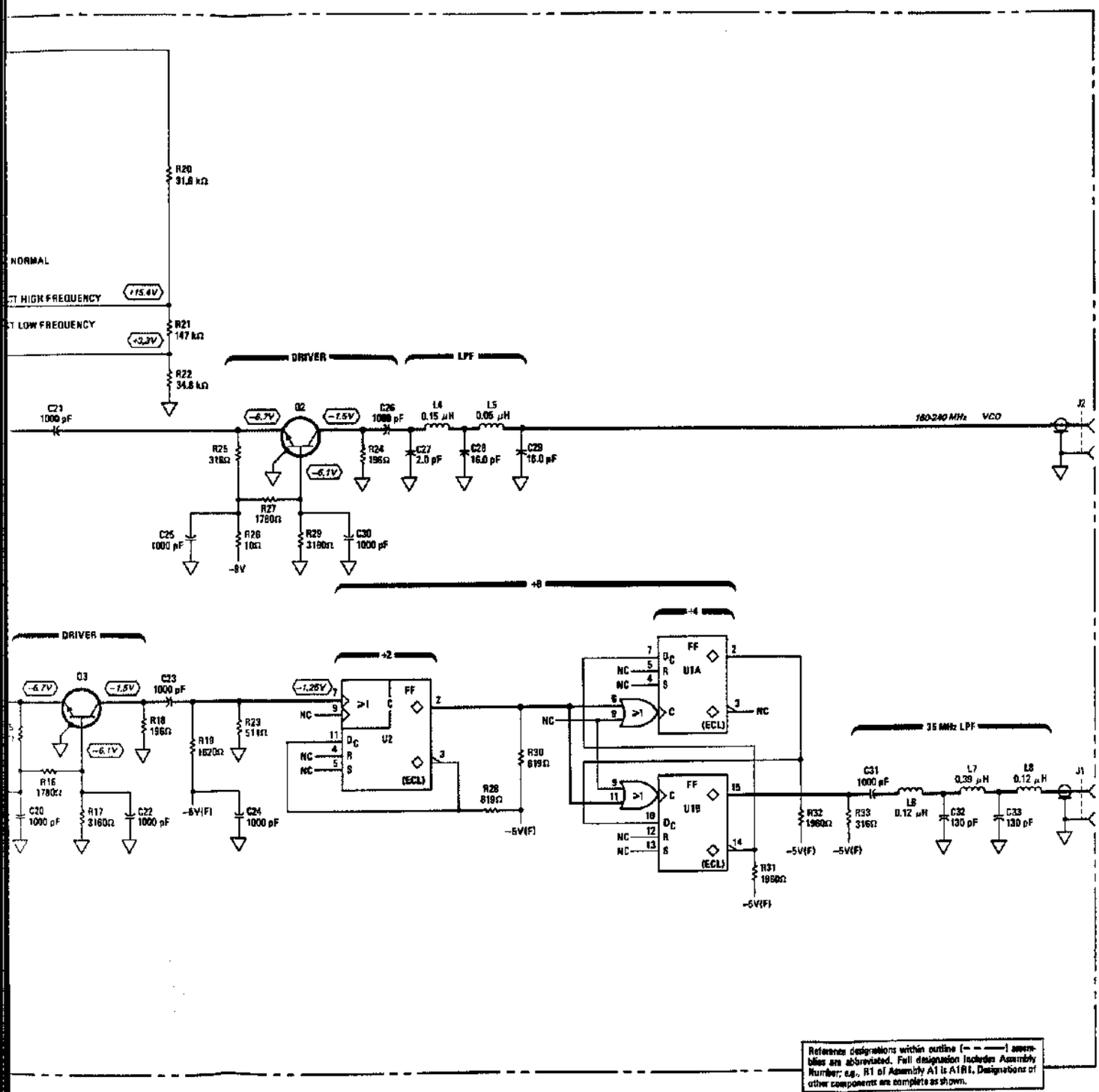


Figure 8-216. VCO 160-240 MHz Ass

www.valuetronics.com

FIG. 8-216
SHT 3 of 3

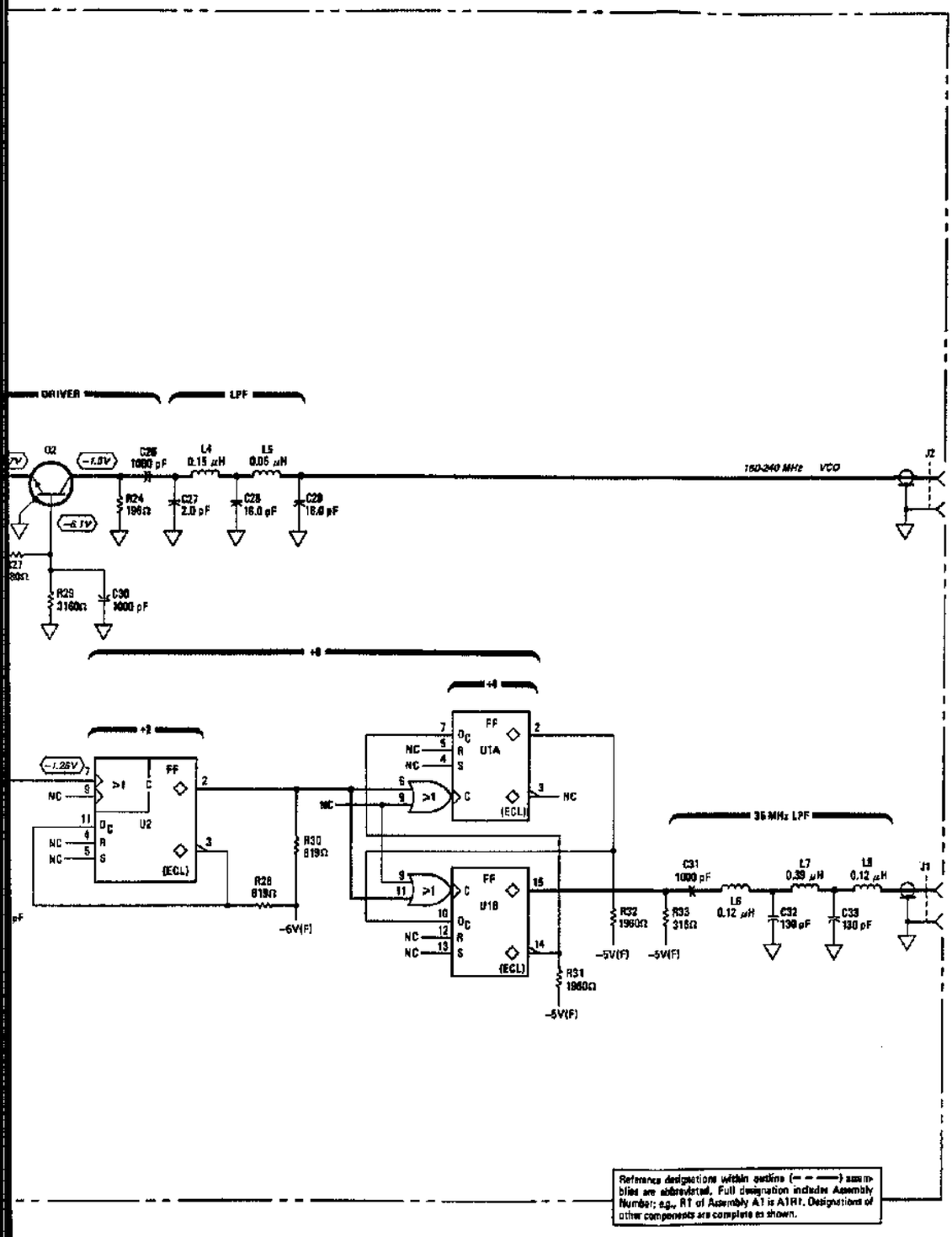


NOTES

1. REFER TO TABLE 8-1 FOR SCHEMATIC DIAGRAM NOTES.
2. POWER SUPPLY CONNECTIONS TO THE A2 ASSEMBLY ARE SHOWN ON SERVICE SHEET 6

REFERENCE DESIGNATIONS

| A2 | A2A3 |
|---|---|
| W2 | C1-33 |
| A2A13 | CR1-4 |
| XA2A3 | J1, 2 |
| A3 | L1-8 |
| W14 | Q1-6 |
| | R1-34 |
| | S1 |
| | T1 |
| | U1, 2 |

LOGIC LEVELS

| LOGIC | TTL | ECL | EECL | CMOS |
|---|---|---|---|---|
| HIGH (1) | >2V | >-0.5V | >-0.1V | ≈VDD |
| LOW (0) | <0.8V | <-1.5V | <-0.6V | <0.1V |

< = EQUAL TO OR MORE NEGATIVE THAN
> = EQUAL TO OR MORE POSITIVE THAN

| INPUT | TTL | ECL | EECL | CMOS |
|---|---|---|---|---|
| GROUND | LOW(0) | HIGH(1) | HIGH (1) | LOW (0) |
| OPEN | HIGH (1) | LOW (0) | LOW (0) | X |

GROUND = 0V; X = UNDEFINED

TRANSISTOR AND INTEGRATED CIRCUIT PART NUMBERS

| REFERENCE DESIGNATIONS | PART NUMBERS |
|---|---|
| Q1 | 1855-0392 |
| Q2-4 | 1854-0345 |
| Q5 | 1855-0020 |
| Q6 | 1853-0451 |
| U1 | 1820-1225 |
| U2 | 1820-0794 |

INTEGRATED CIRCUIT VOLTAGE AND GROUND CONNECTIONS

| REFERENCE DESIGNATIONS | PIN NUMBERS |
|---|---|
| U1, 2 | -5V(F) - 8<br>▽ - 1, 16 |

Reference designations within outline (— — —) assemblies are abbreviated. Full designation includes Assembly Number; e.g., R1 of Assembly A1 is A1R1. Designations of other components are complete as shown.

8
A2A3

**Figure 8-216. VCO 160-240 MHz Assembly Schematic Diagram**



www.valuetronics.com

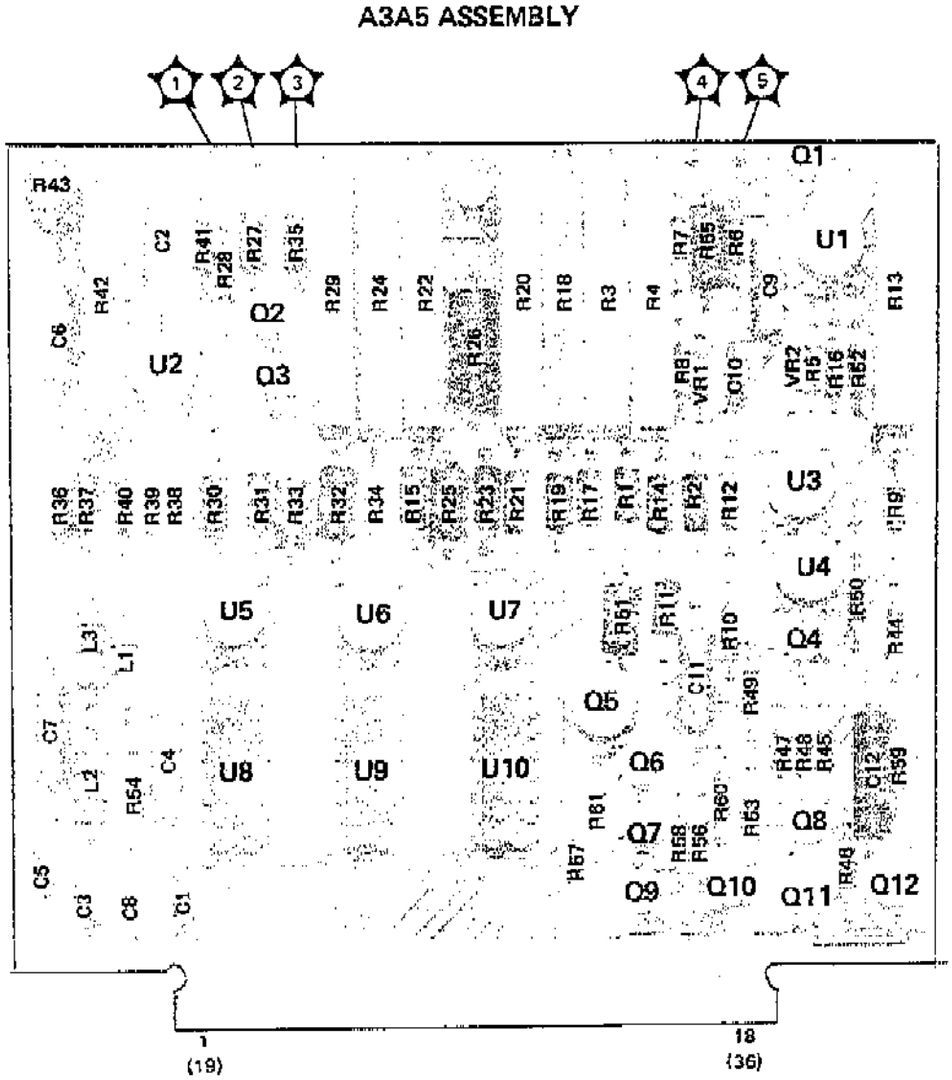


Figure 8-217. A3A5 DAC Assembly Component and Test Point Location

8-217a

www.valuetronics.com

FIG. 8-218
SHT 1 of 3

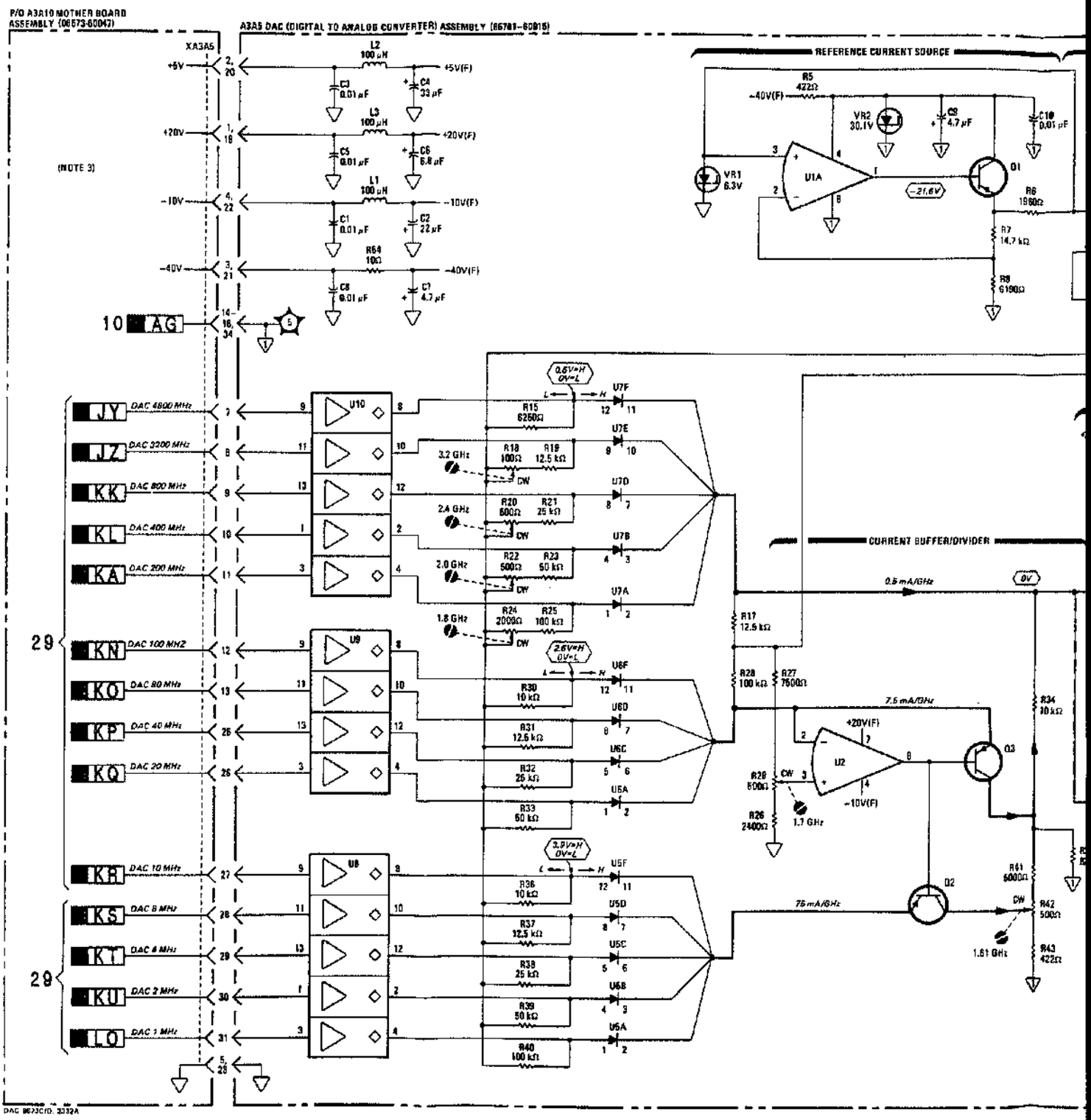


www.valuetronics.com

FIG. 8-218
Sht 2 of 3

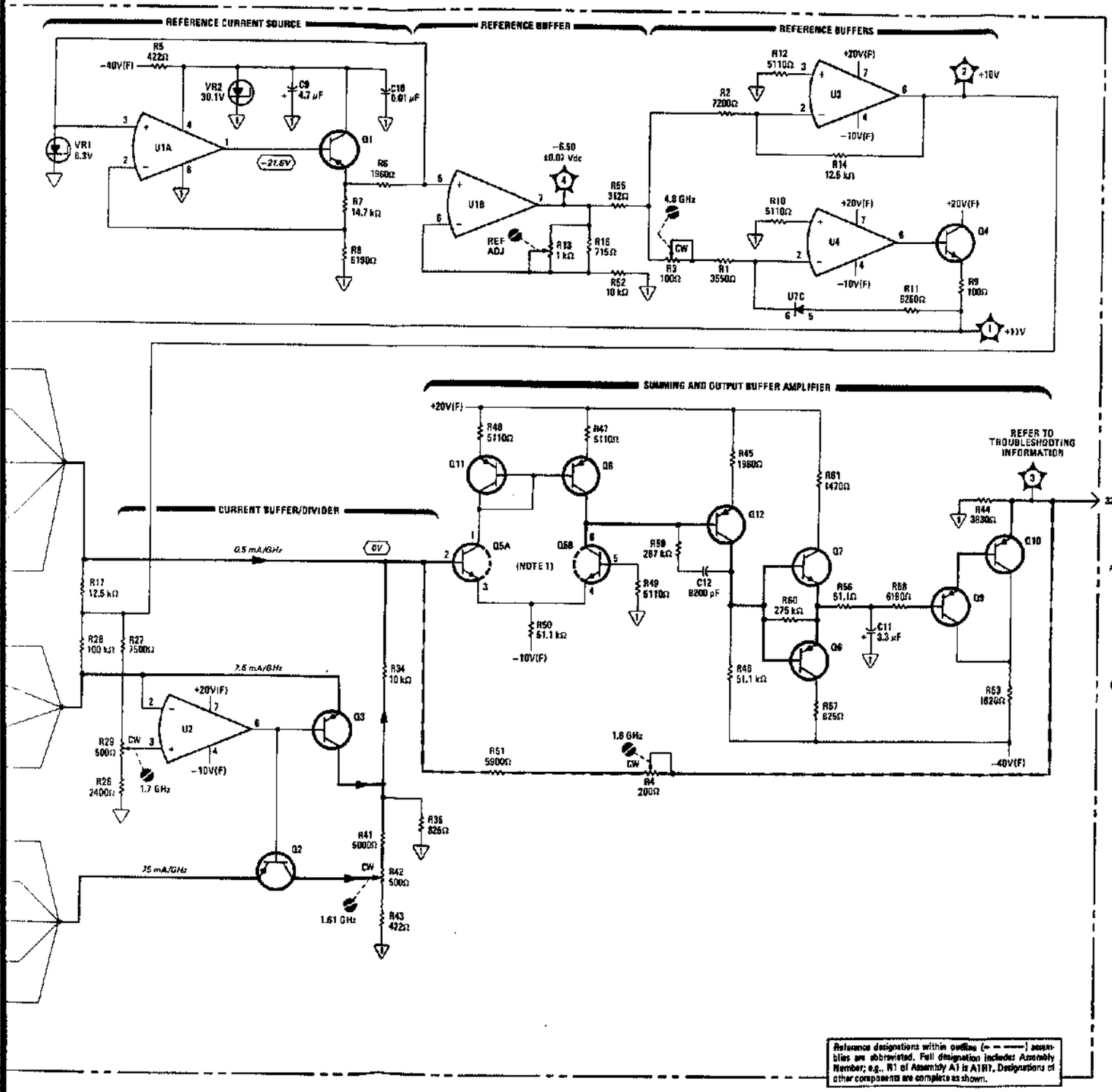


Figure 8-218. Digital to A

www.valuetronics.com

FIG. 8-218
SHT 3 of 3

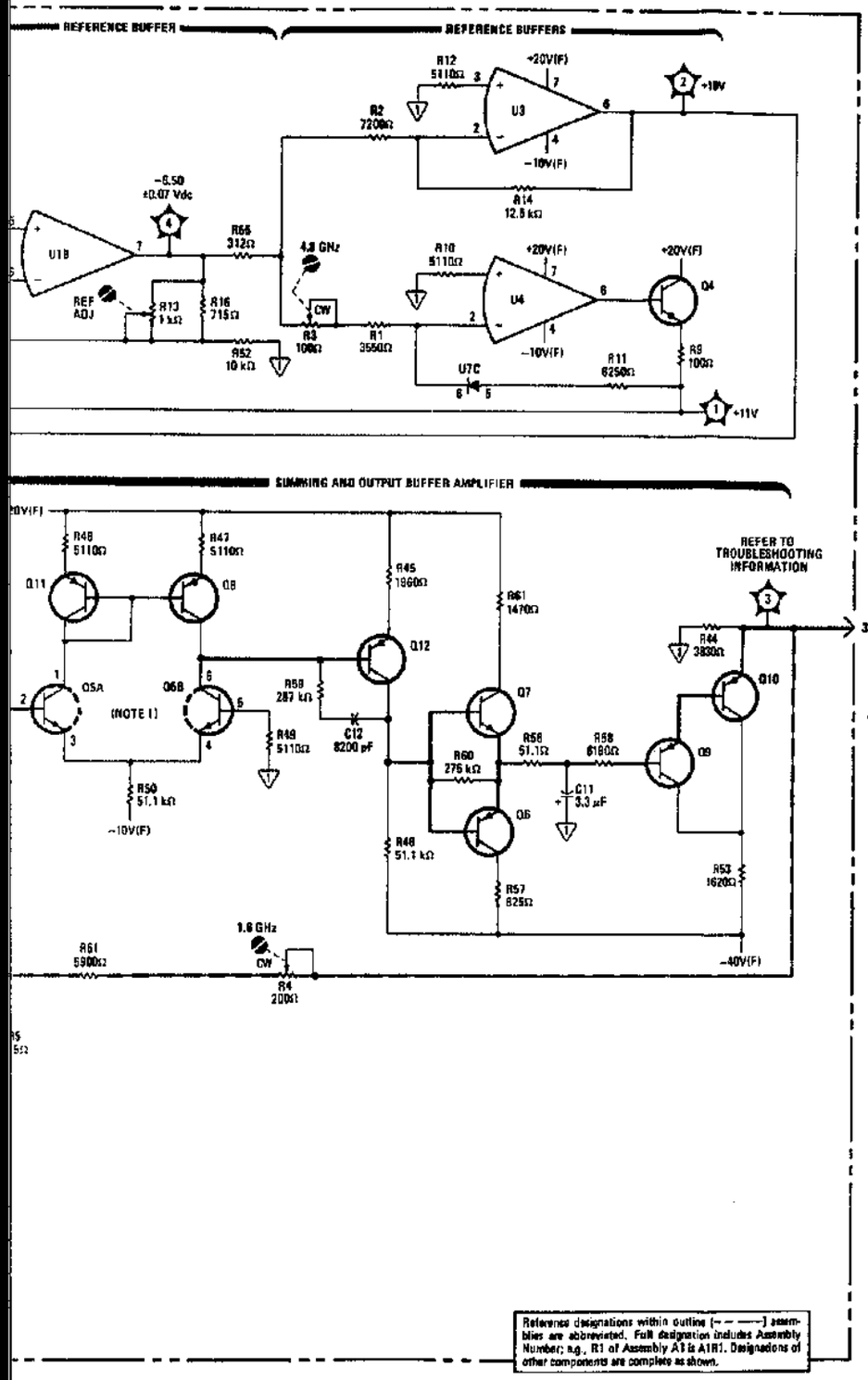


NOTES

1. REFER TO THE FOLLOWING DIAGRAM FOR PIN LOCATIONS

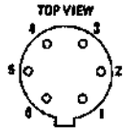


2. REFER TO TABLE 8-1 FOR SCHEMATIC DIAGRAM NOTES.
3. POWER SUPPLY CONNECTIONS TO THE MOTHERBOARD ASSEMBLY ARE SHOWN ON SERVICE SHEET 1

REFERENCE DESIGNATIONS

| A3 | A3A10 |
|---|---|
| W4 | XA3A5 |
| A3A5 | |
| C1–12<br>L1–3<br>Q1–12<br>R1–61<br>TP1–5<br>U1–10<br>VR1,2 | |

TRANSISTOR AND INTEGRATED CIRCUIT PART NUMBERS

| REFERENCE DESIGNATIONS | PART NUMBERS |
|---|---|
| Q1,8,11 | 1853–0007 |
| Q2,3,6,9, 10,12 | 1853–0451 |
| Q4 | 1854–0404 |
| Q5 | 1854–0712 |
| Q7 | 1854–0474 |
| U1 | 1826–0082 |
| U2–4 | 1826–0281 |
| U5–7 | 1901–1011 |
| U8–10 | 1820–0666 |

DIGITAL INTEGRATED CIRCUIT VOLTAGE AND GROUND CONNECTIONS

| REFERENCE DESIGNATIONS | PIN NUMBERS |
|---|---|
| U8–10 | +5V(F) — 14<br>▽ — 7 |

9
A3A5

**Figure 8-218. Digital to Analog Converter Assembly Schematic Diagram**



www.valuetronics.com

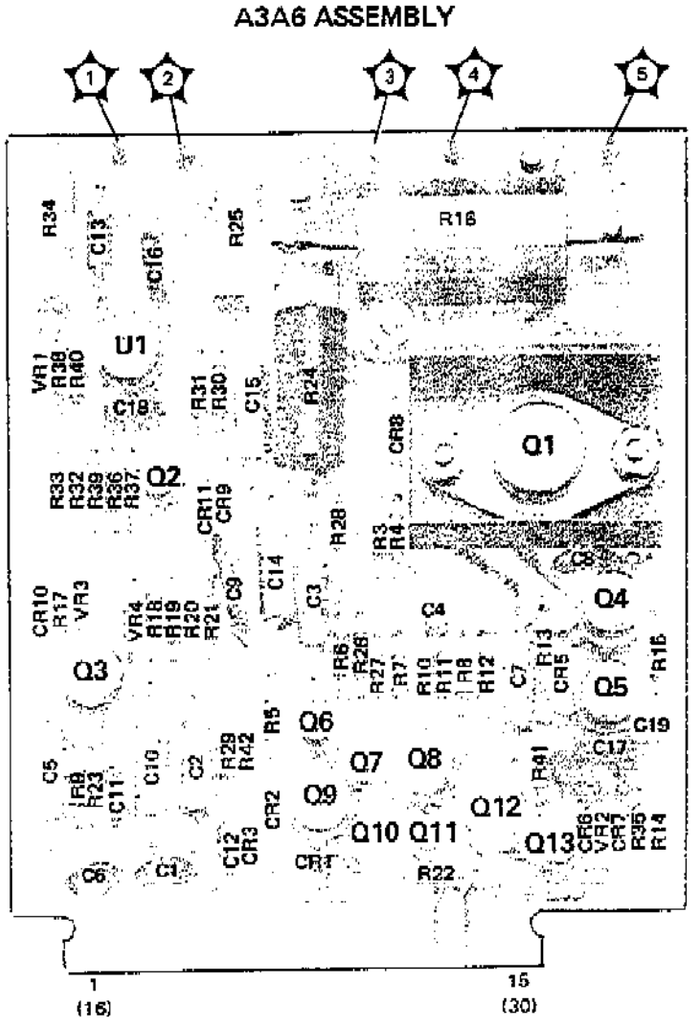


Figure 8-219. A3A6 YTO Driver Assembly Component and Test Point Location

8-219a

www.valuetronics.com

FIG. 8-220
Sht 1 of 2

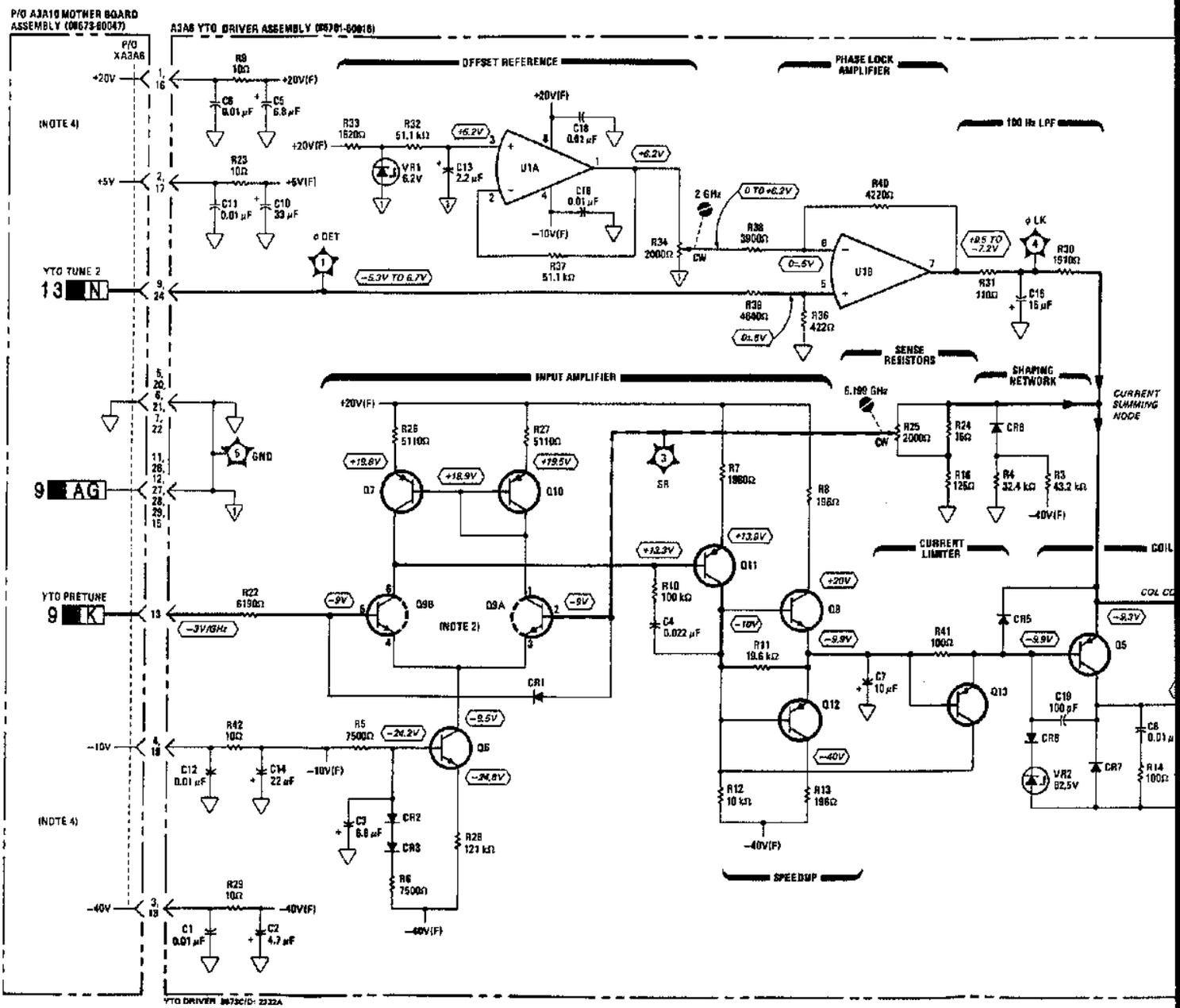


www.valuetronics.com

FIG. 8-220
Sht 2 of 2

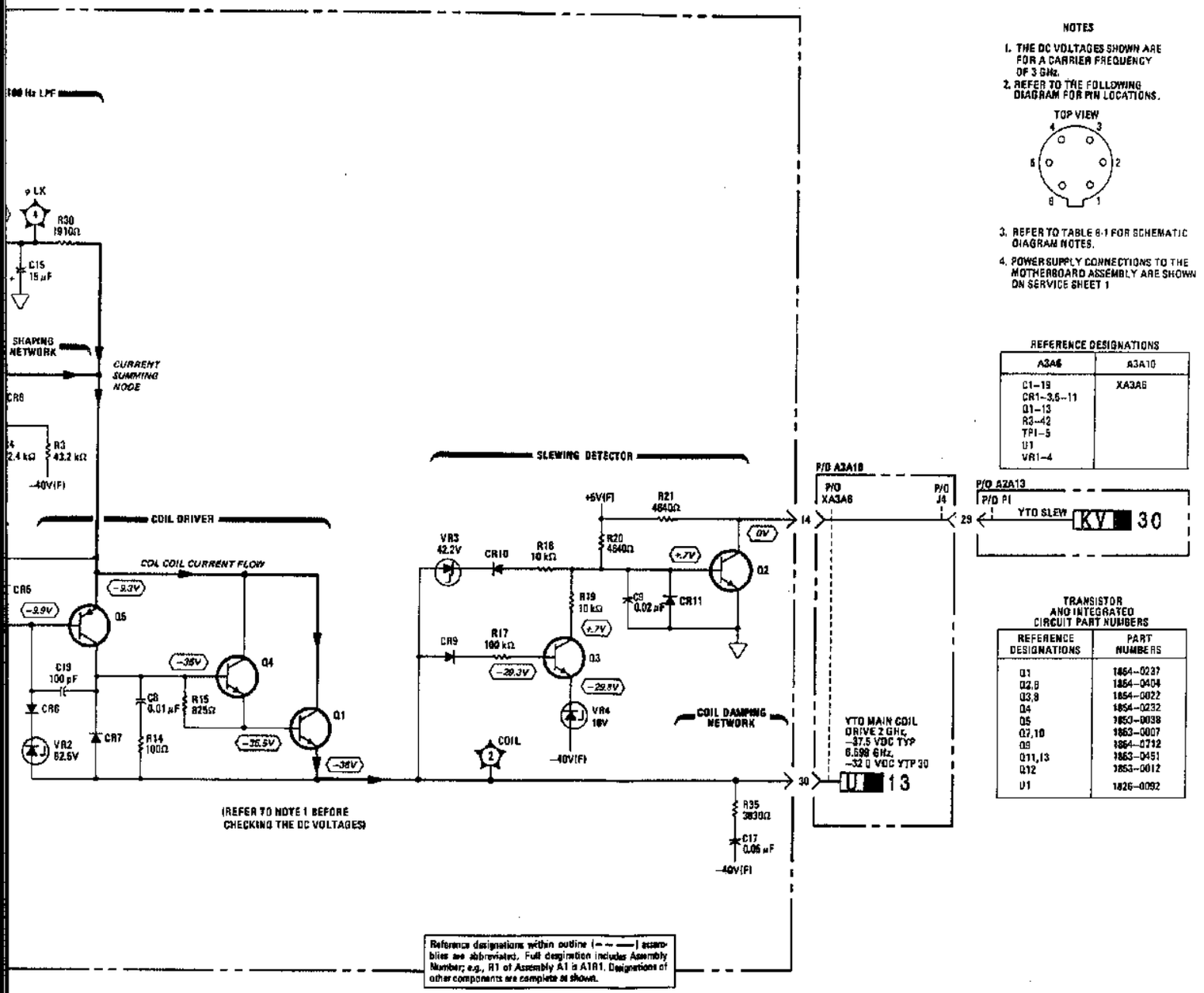


10
A3A6

Figure 8-220. YTO Driver Assembly Schematic Diagram



www.valuetronics.com

Service Shts 11-20

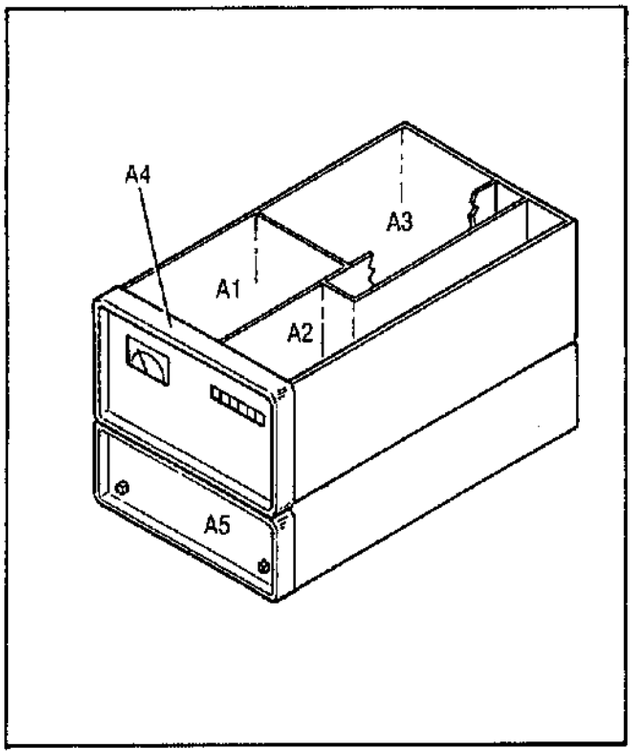


**Major Assemblies**

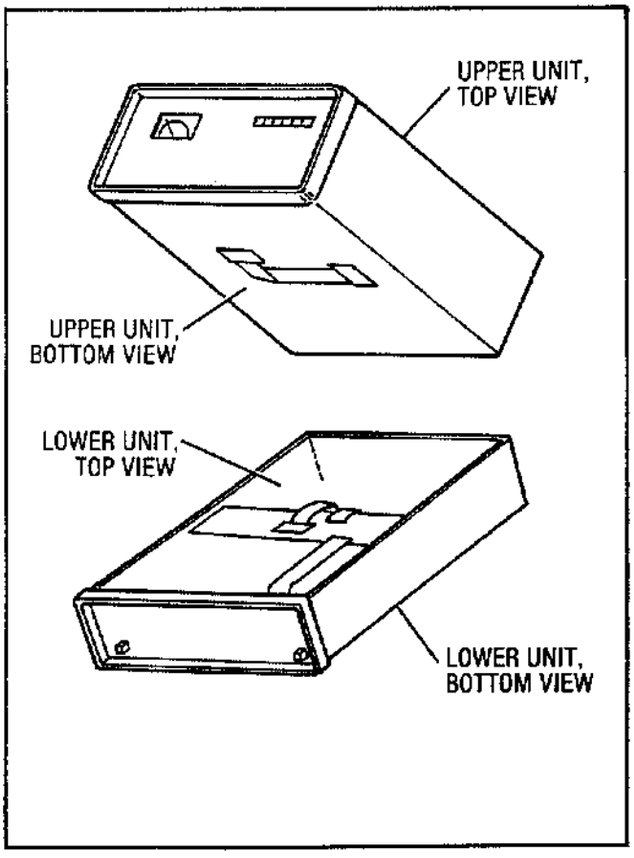


**Internal View Identification**

## Assemblies vs. Service Sheet List

| Assembly | Description | Ser.Sheet |
|---|---|---|
| A1A1 | Attenuator Driver Board Assembly | 18 |
| A1A2 | Detector Module Assembly | 14,17 |
| A1A2A1 | ALC Board Assembly | 14,17 |
| A1A2A2 | Detector Board Assembly | 17 |
| A1A3 | Function Board Assembly | 20 |
| A1A4 | Pulse Driver Board Assembly | 15 |
| A1A5 | DAC and Enable Board Assembly | 22 |
| A1A6 | Meter Board Assembly | 20,40 |
| A1A7 | YTM Driver Board Assembly | 16 |
| A1A8 | SRD Bias Board Assembly | 19 |
| A1A9 | Preamp Assembly | 14,16 |
| A1A10 | YTM Assembly | 16 |
| A1A10A1 | YIG Heater Control Assembly | 16 |
| A1A11 | Power Amplifier Assembly | 16 |
| A1A12 | Motherboard Assembly | 14-16,18-22, 30,31,40 |
| A1A13 | Terminal Strip | 37 |
| A1A14 | Amp Bias Board Assembly | 17 |
| A2A1 | Panel Driver Board Assembly | 25 |
| A2A2 | Key Code Board Assembly | 24 |
| A2A3 | VCO Assembly | 8 |
| A2A4 | Phase Detector Assembly | 7 |
| A2A5 | Divider Assembly 20/30 | 6 |
| A2A6 | Not Assigned | |
| A2A7 | I/O Board Assembly | 30,31 |
| A2A8 | Microprocessor Board Assembly | 26 |
| A2A9 | Frequency/HP-IB Board Assembly | 29 |
| A2A10 | RAM Board Assembly | 28 |
| A2A11 | ROM Board Assembly | 27 |
| A2A13 | Motherboard Assembly | 6-8,10, 20-32 |
| A2A14 | Rear Interconnect Board Assembly | 24,29, 31 |
| A2A15 | HP-IB Connector Board Assembly | 29 |
| A3A1 | Rectifier Assembly | 33 |
| A3A1A1 | Reference Phase Detector Assembly | 1,2 |
| A3A1A2 | 100 MHz VCXO Assembly | 2 |
| A3A1A3 | M/N Phase Detector Assembly | 3 |
| A3A1A4 | M/N VCO Assembly | 4 |
| A3A1A4A1 | VCO Resonator | 4 |
| A3A1A4A2 | VCO Board Assembly | 4 |
| A3A1A5 | M/N Output Assembly | 5 |
| A3A1A6 | M/N Reference Motherboard Assembly | 1-3,5 |
| A3A1A7 | Reference Housing Assembly | |
| A3A2 | Not Assigned | |
| A3A3 | Positive Regulator Assembly | 34 |
| A3A4 | Negative Regulator Assembly | 35 |
| A3A5 | DAC Assembly | 9 |
| A3A6 | YTO Driver Assembly | 10 |
| A3A7 | FM Driver Assembly | 13 |
| A3A8 | 10 MHz Reference Oscillator | 1 |
| A3A9 | YTO Loop Assembly | 11,12 |
| A3A9A1 | Directional Coupler Assembly | 13 |
| A3A9A2 | YTO Interconnect Assembly | 11-13 |
| A3A9A3 | 2.0 - 6.6 GHz YTO Assembly | 13 |
| A3A9A4 | YTO Phase Detector Assembly | 12 |
| A3A9A5 | Sampler Assembly | 11 |
| A3A9A6 | Attenuator Assembly | 13 |
| A3A9A7 | 6.2 GHz Low Pass Filter | 13 |
| A3A10 | Motherboard Assembly | 1,3,6,10, 12-14,21-23 26, 29-31, 33-35 |
| A4A1 | Front Panel Board Assembly | 20,22, 23,32,40 |
| A5A1 | Front Panel Board Assembly | 41,42,44 |
| A5A2 | Detector Module Assembly | 36,39 |
| A5A2A1 | ALC Board Assembly | 36,39 |
| A5A2A2 | Detector Board Assembly | 39 |
| A5A3 | Function Board Assembly | 42 |
| A5A4 | Pulse Driver Board Assembly | 37 |
| A5A5 | DAC and Enable Board Assembly | 44 |
| A5A6 | Switch Driver Board Assembly | 36,41 |
| A5A7 | YTM Driver Board Assembly | 38 |
| A5A8 | Motherboard Assembly | 36-38,40-44, 46,47 |
| A5A9 | Microprocessor Board Assembly | 43 |
| A5A10 | Power Supply Board Assembly | 45-47 |
| A5A11 | Regulator 2 Board Assembly | 46 |
| A5A12 | Regulator 1 Board Assembly | 46,47 |
| A5A13 | Pulse Input Assembly | 37 |
| A5A13A1 | Pulse Input Switch Board Assembly | 37 |

www.valuetronics.com

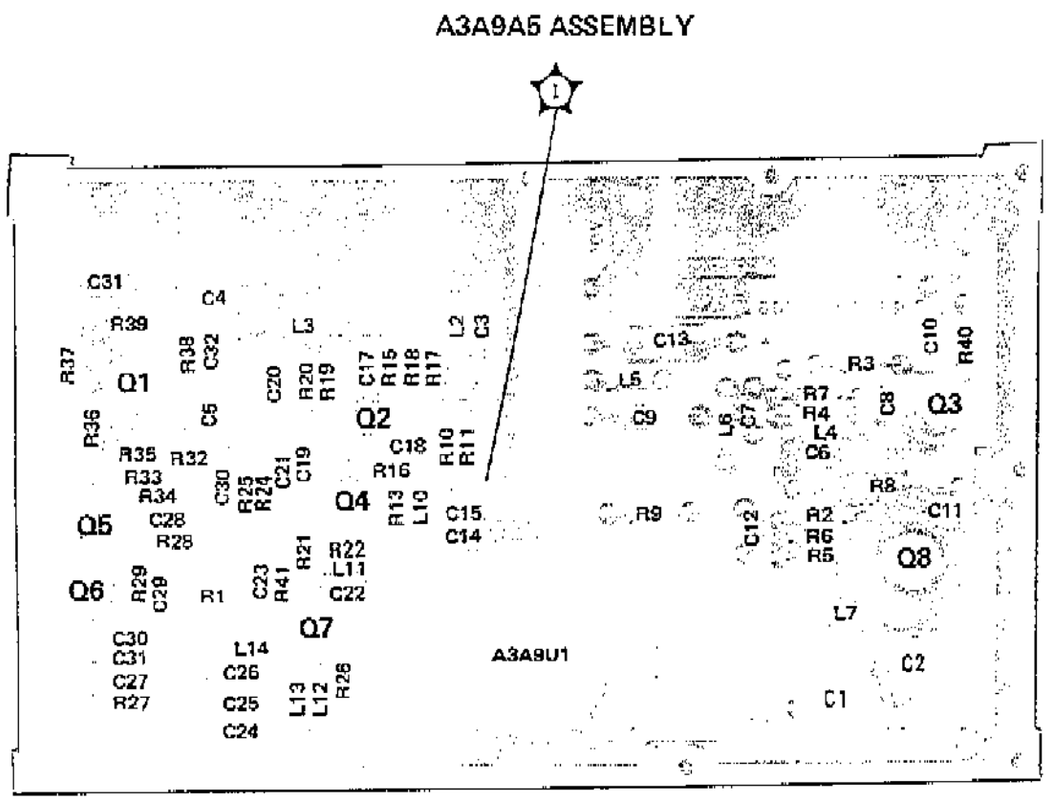


Figure 8-221. A3A9A5 Sampler Assembly Component and Test Point Location

8-221a

www.valuetronics.com

FIG. 8-222
Sht 1 of 3

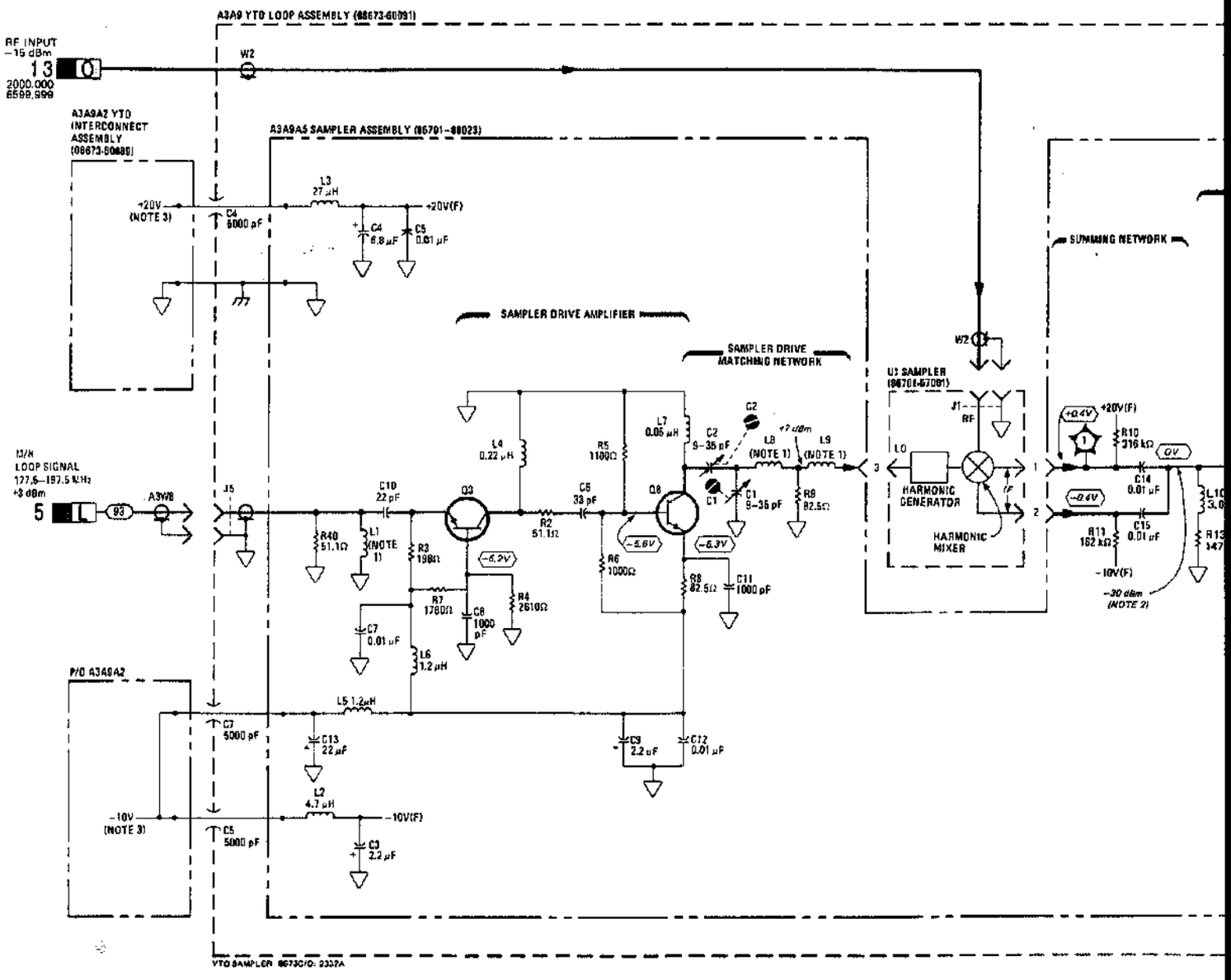


www.valuetronics.com

FIG. 8-222
SM 2 of 3

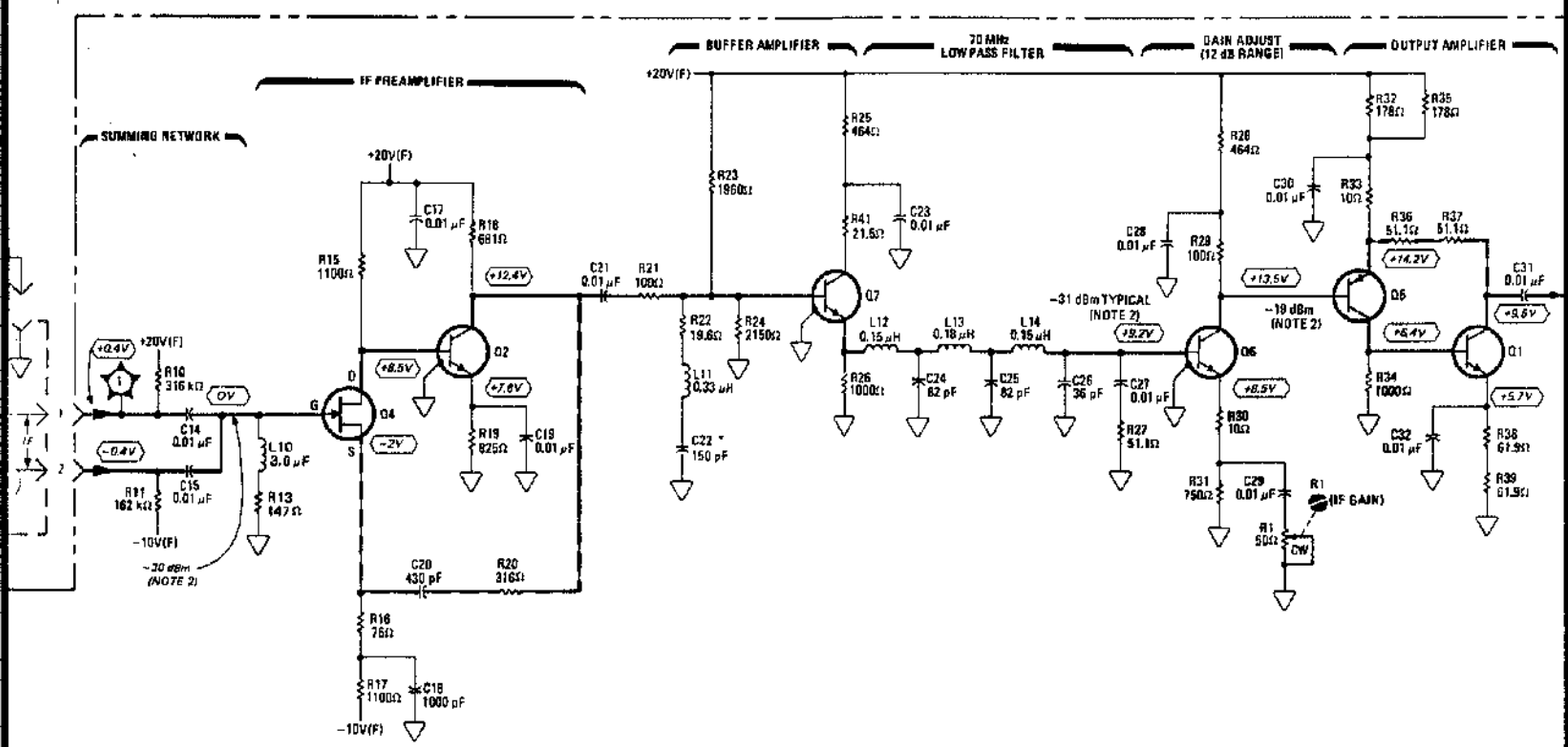


Reference designations within outline (— — —) assemblies are abbreviated. Full designation includes Assembly Number; e.g., R1 of Assembly A1 is A1R1. Designations of other components are complete as shown.

Figure 8-222. P/O YT

www.valuetronics.com

FIG. 8-222
Sht 3 of 3

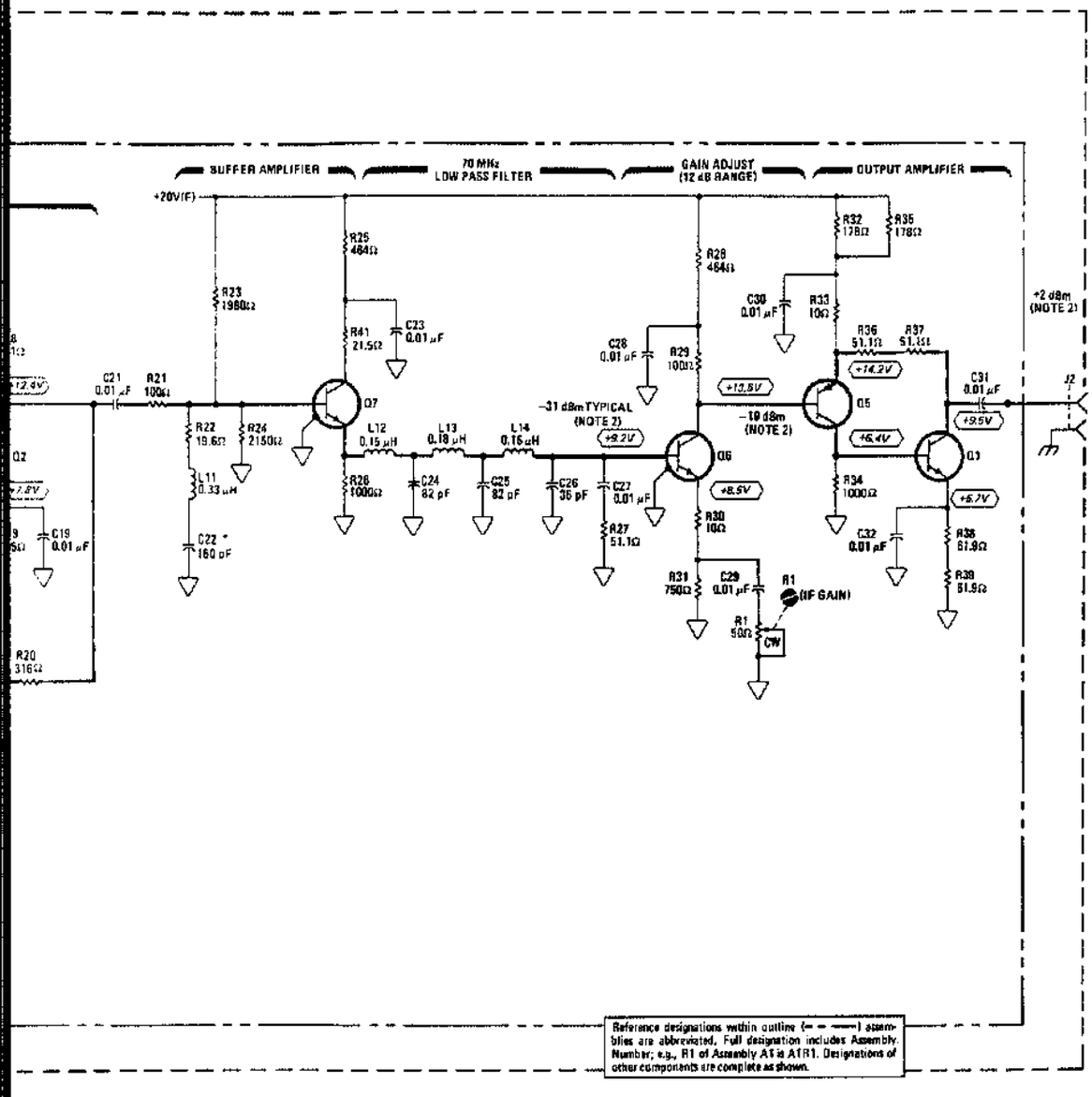


NOTES

1. INDUCTORS A3A9A5L1, 8 AND 9 ARE PART OF THE CIRCUIT BOARD.
2. TYPICAL IF LEVELS MEASURED WITH A 5 kΩ PROBE (50Ω REFERENCE) WITH NORMAL LOAD AT J2.
3. POWER SUPPLY INPUTS TO A3A9A2 ARE SHOWN ON SERVICE SHEET 12.
4. REFER TO TABLE 8-1 FOR SCHEMATIC DIAGRAM NOTES.

* ASTERISK INDICATES SELECTED COMPONENTS. NOMINAL VALUES SHOWN.

REFERENCE DESIGNATIONS

| A3 | A3A9A5 |
|---|---|
| W8 | C1–32<br>L1–14<br>Q1–8<br>R1–11,13–41<br>TP1 |
| A3A9 | |
| C4,5,7<br>J2,3<br>U1<br>W2,4 | |

DELETED: A3A9A5E1; R12

TRANSISTOR PART NUMBERS

| REFERENCE DESIGNATIONS | PART NUMBERS |
|---|---|
| Q1,3,8 | 1854–0247 |
| Q2,6,7 | 1854–0345 |
| Q4 | 1855–0235 |
| Q5 | 1853–0015 |

**11**

**A3A9A2, A3A9A5**

**Figure 8-222. P/O YTO Loop Assembly Schematic Diagram**



www.valuetronics.com

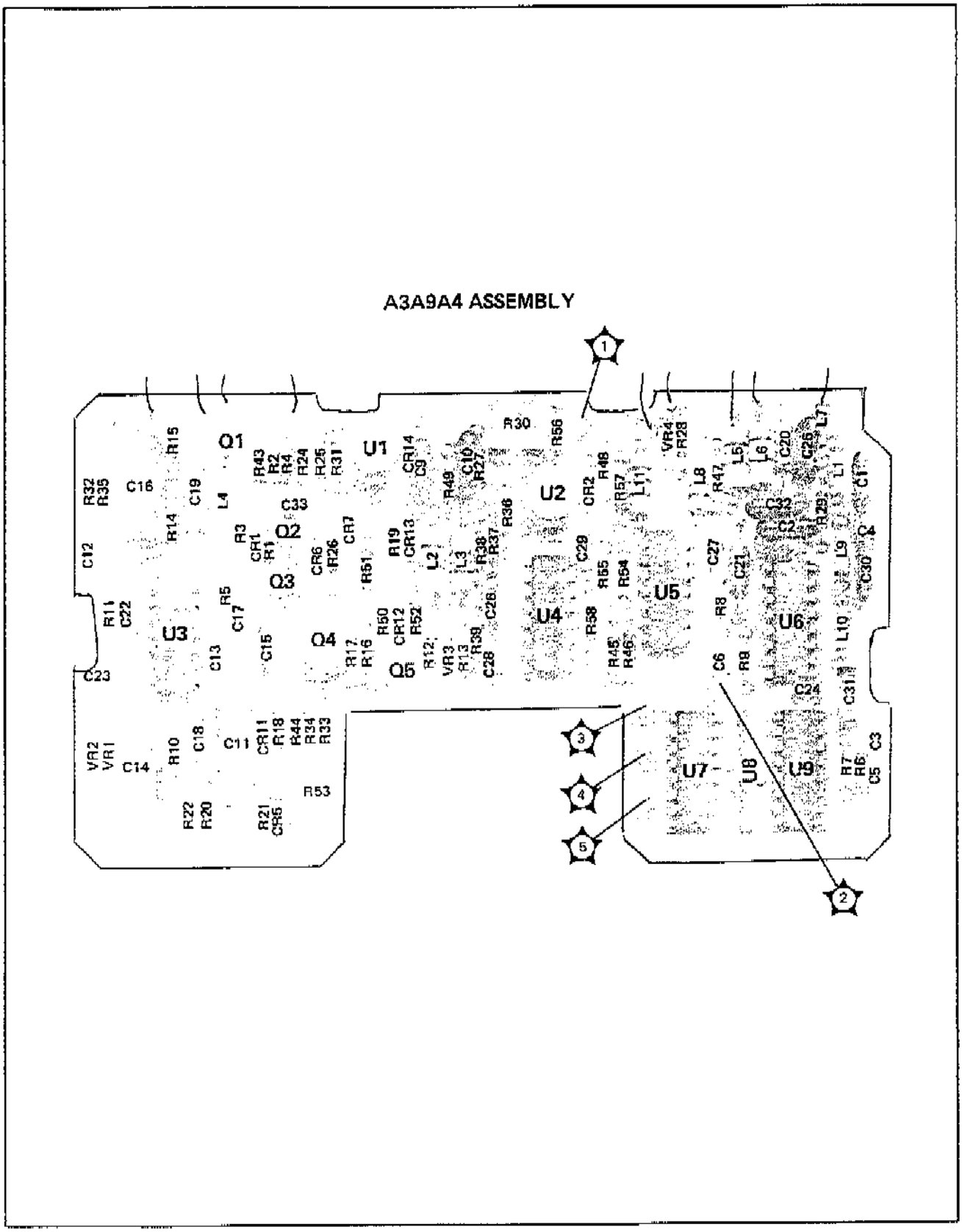


Figure 8-223. A3A9A4 YTO Phase Detector Assembly Component and Test Point Location

8-223a

www.valuetronics.com

FIG. 8-224
Sht 1 of 3

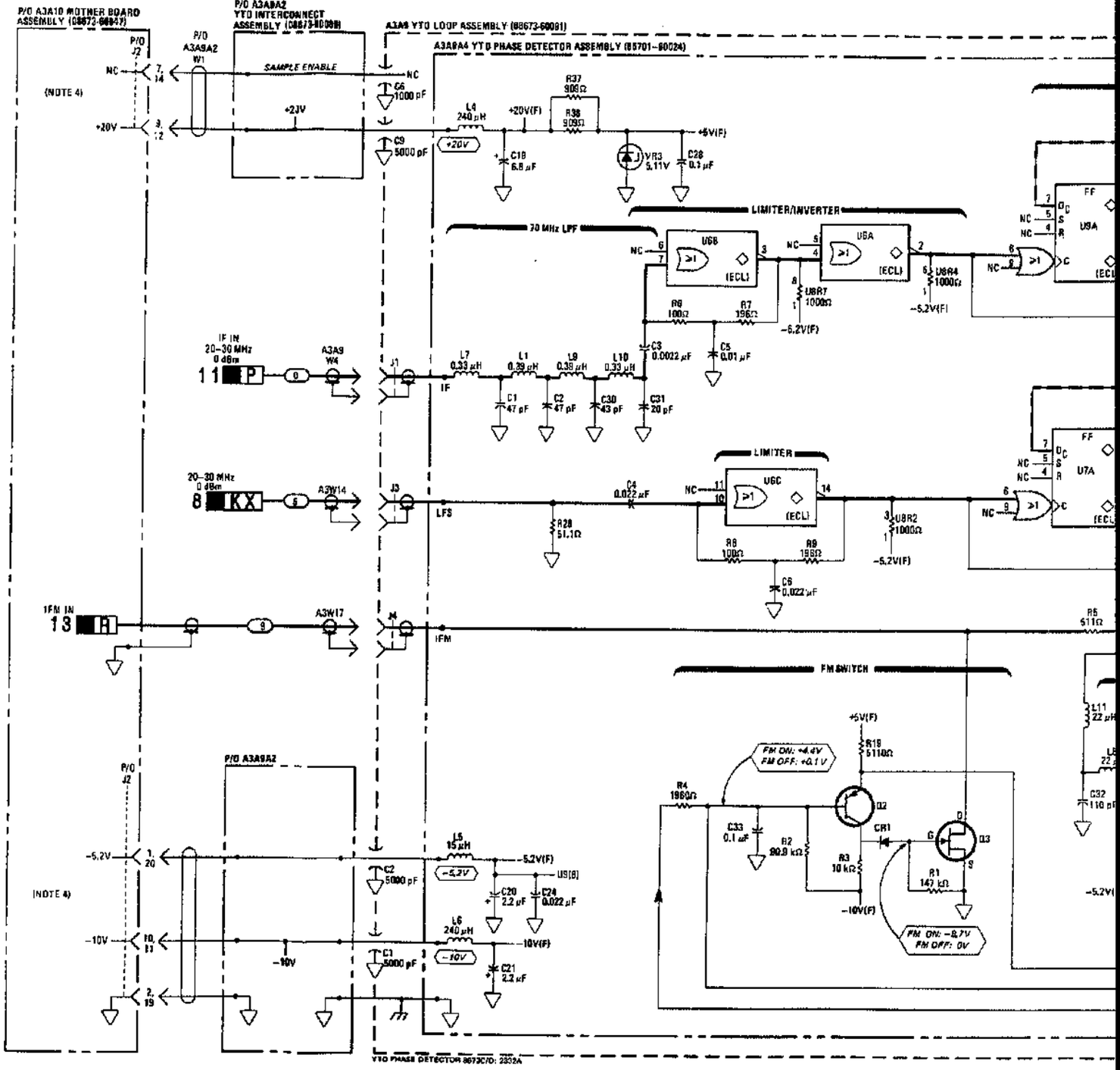


www.valuetronics.com

FIG. 8-324
Sht 2 of 3

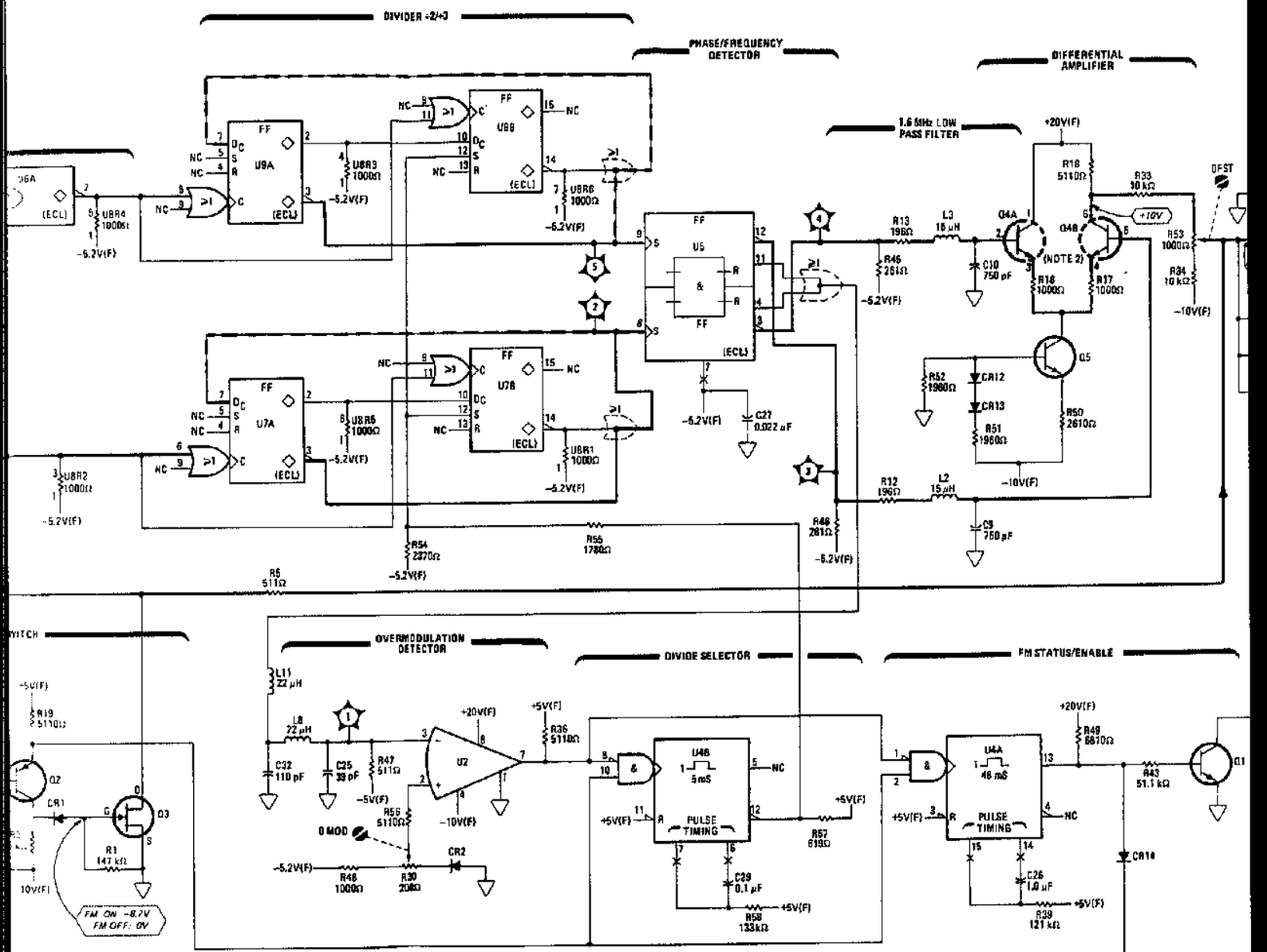


www.valuetronics.com

FIG. 8-224
Sht 3 of 3

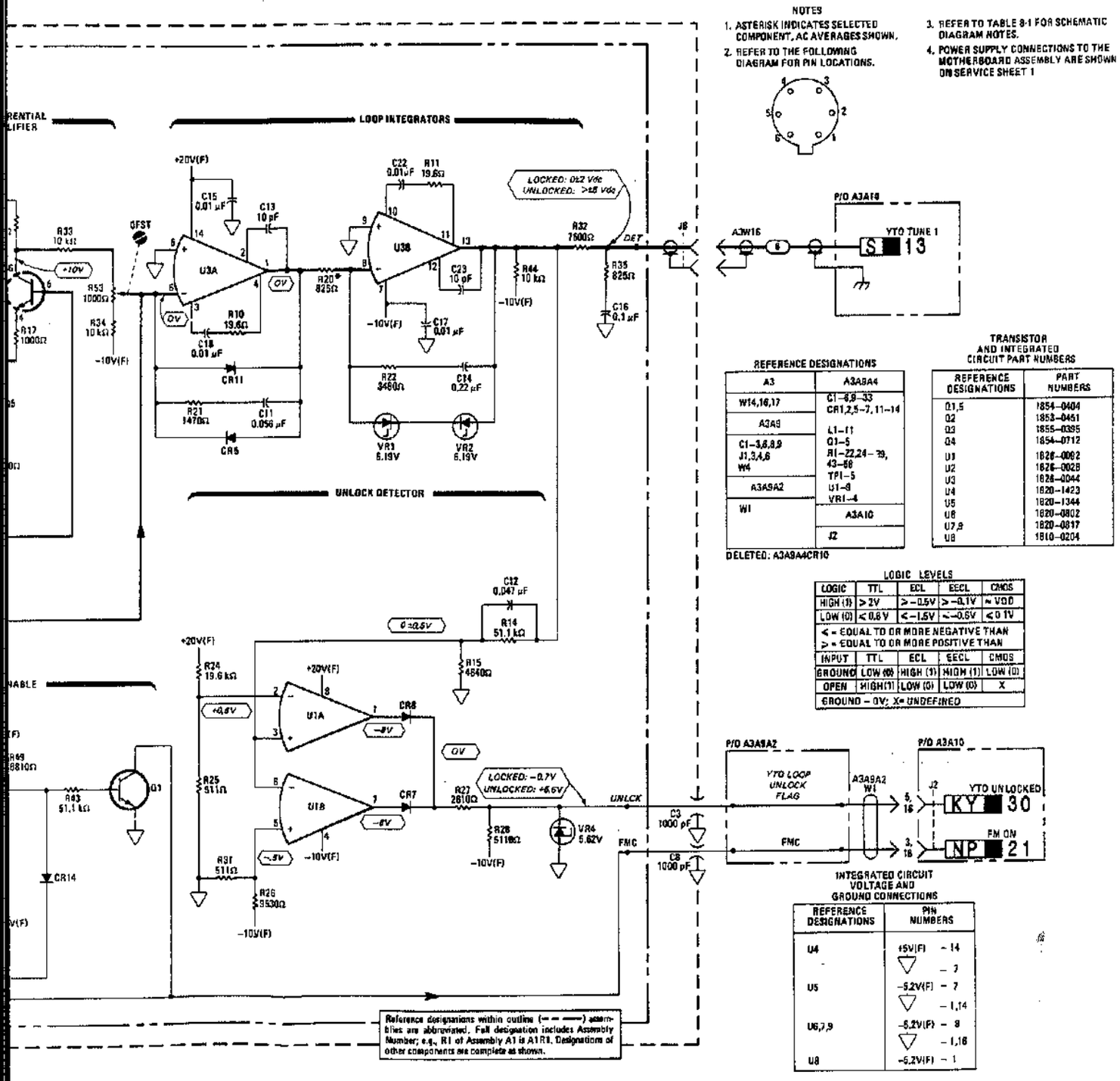


| REFERENCE DESIGNATIONS | |
|---|---|
| A3 | A3A9A4 |
| W14,16,17 | C1–6,8–33<br>CR1,2,5–7,11–14 |
| A3A9 | L1–11<br>Q1–5<br>R1–22,24–39,<br>43–58<br>TP1–5<br>U1–8<br>VR1–4 |
| C1–3,6,8,9<br>J1,3,4,6<br>W4 | |
| A3A9A2 | |
| W1 | A3A10 |
| | J2 |

| TRANSISTOR AND INTEGRATED CIRCUIT PART NUMBERS | |
|---|---|
| REFERENCE DESIGNATIONS | PART NUMBERS |
| Q1,5 | 1854–0404 |
| Q2 | 1853–0451 |
| Q3 | 1855–0395 |
| Q4 | 1854–0712 |
| U1 | 1826–0062 |
| U2 | 1826–0028 |
| U3 | 1826–0044 |
| U4 | 1820–1423 |
| U5 | 1820–1344 |
| U6 | 1820–0802 |
| U7,9 | 1820–0817 |
| U8 | 1810–0204 |

LOGIC LEVELS

| LOGIC | TTL | ECL | EECL | CMOS |
|---|---|---|---|---|
| HIGH (1) | > 2V | > −0.5V | > −0.1V | ≈ VDD |
| LOW (0) | < 0.8 V | < −1.5V | ≈ −0.6V | ≤ 0.1V |

< = EQUAL TO OR MORE NEGATIVE THAN
> = EQUAL TO OR MORE POSITIVE THAN

| INPUT | TTL | ECL | EECL | CMOS |
|---|---|---|---|---|
| GROUND | LOW (0) | HIGH (1) | HIGH (1) | LOW (0) |
| OPEN | HIGH (1) | LOW (0) | LOW (0) | X |

GROUND = 0V; X = UNDEFINED

| INTEGRATED CIRCUIT VOLTAGE AND GROUND CONNECTIONS | |
|---|---|
| REFERENCE DESIGNATIONS | PIN NUMBERS |
| U4 | +5V(F) – 14<br>– 7 |
| U5 | −5.2V(F) – 7<br>– 1,14 |
| U6,7,9 | −5.2V(F) – 8<br>– 1,16 |
| U8 | −5.2V(F) – 1 |

**12**

**A3A9A2, A3A9A4**

**Figure 8-224. P/O YTO Loop Assembly Schematic Diagram**



www.valuetronics.com

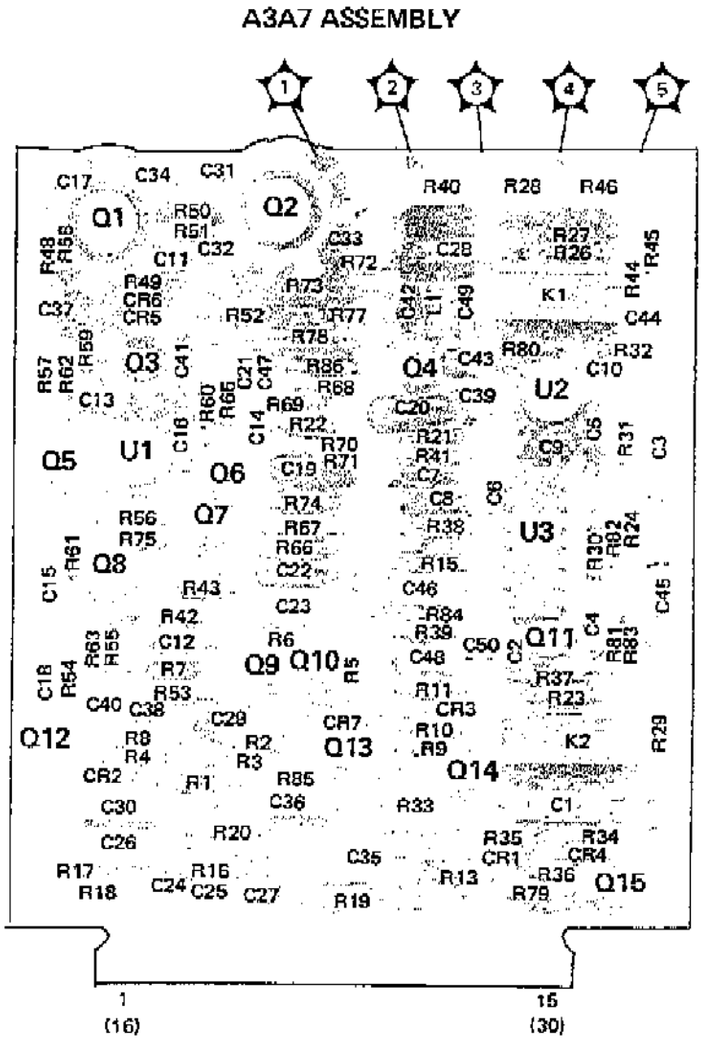


Figure 8-225. A3A7 YTO/FM Coil Driver Assembly Component and Test Point Location

8-225a

www.valuetronics.com

FIG. 8-226
SHT 1 of 3

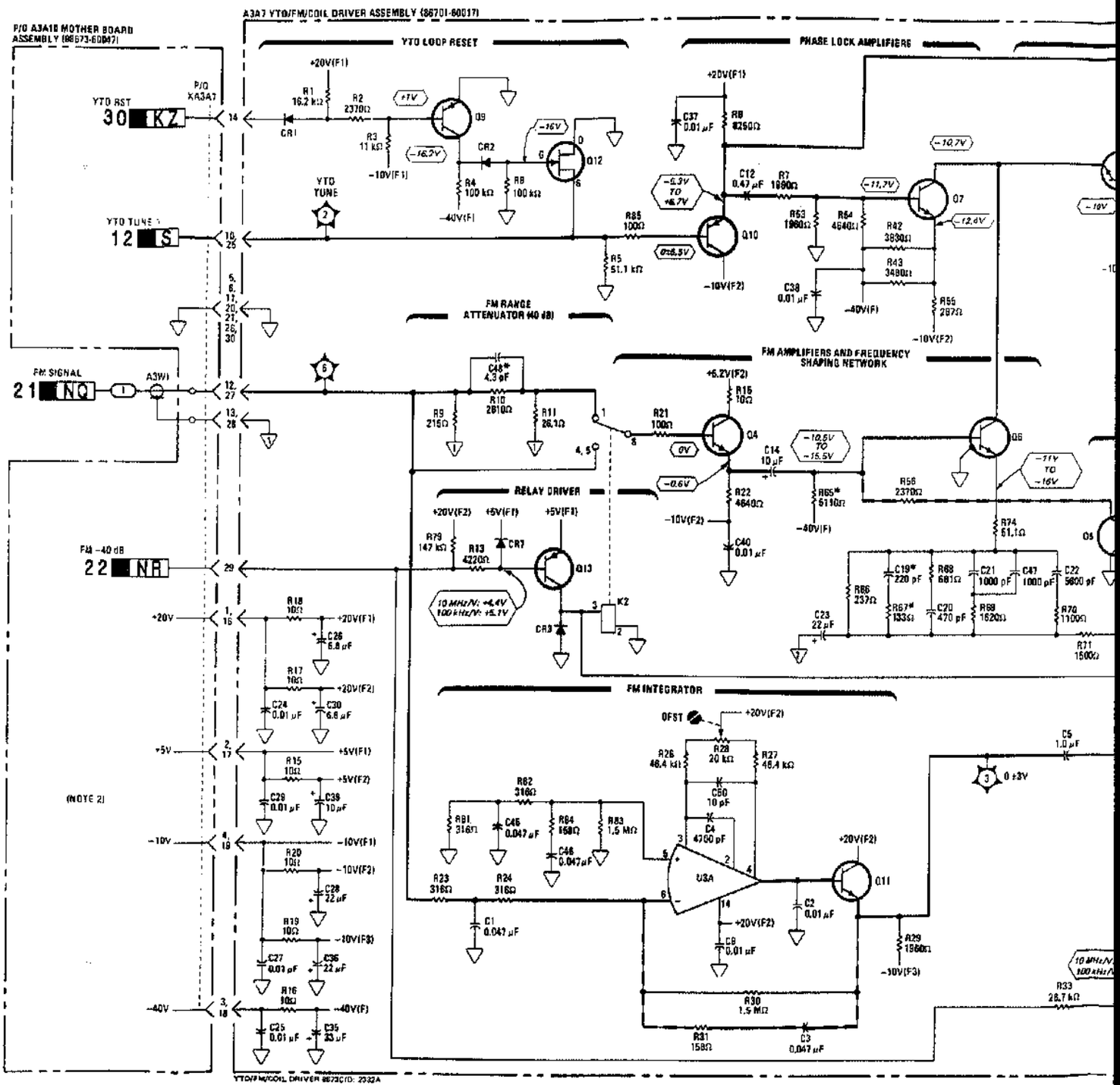


www.valuetronics.com

FIG, 8-226
SHT 2 of 3

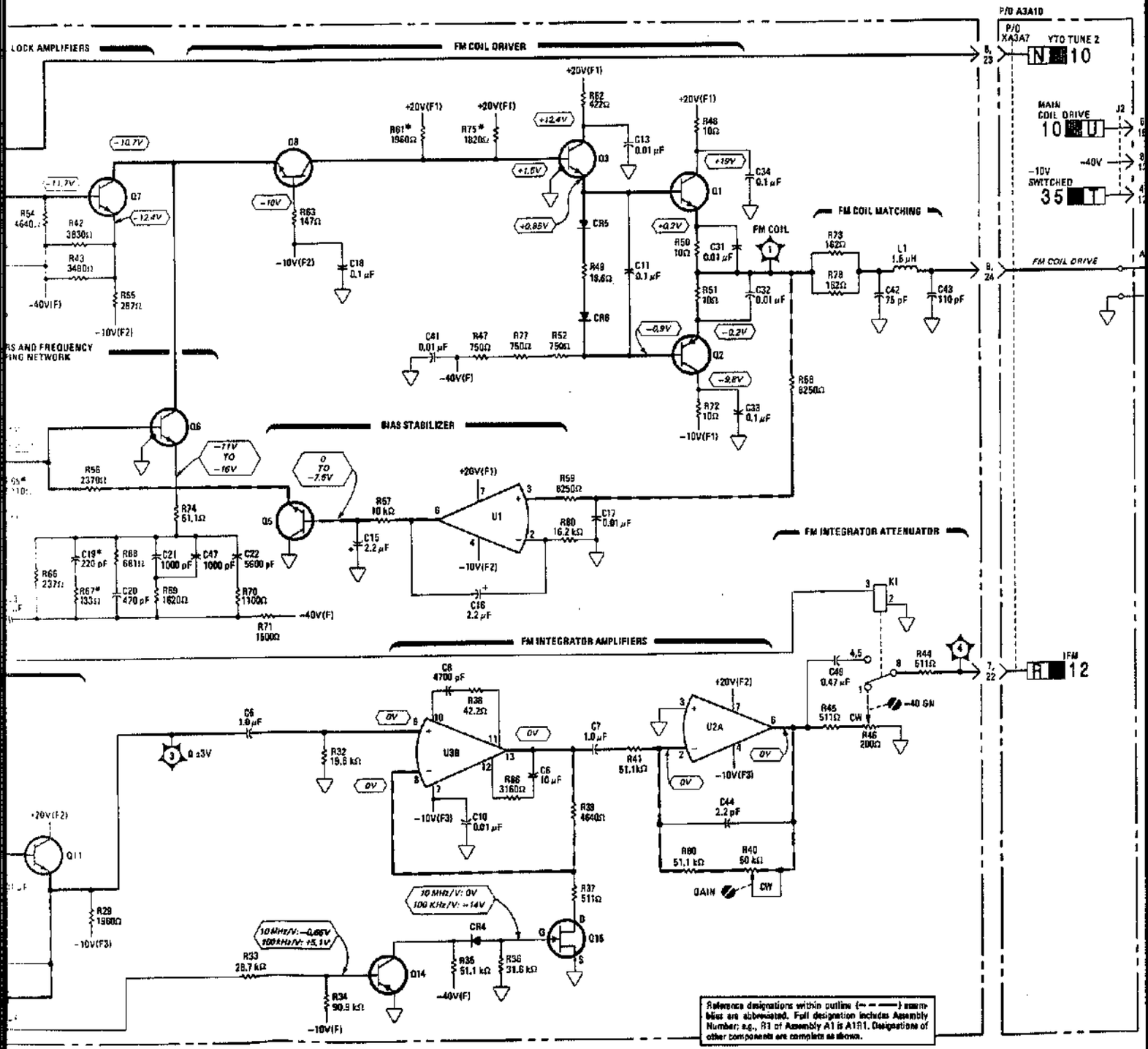


www.valuetronics.com

FIG. 8-226
SHT 3 of 3

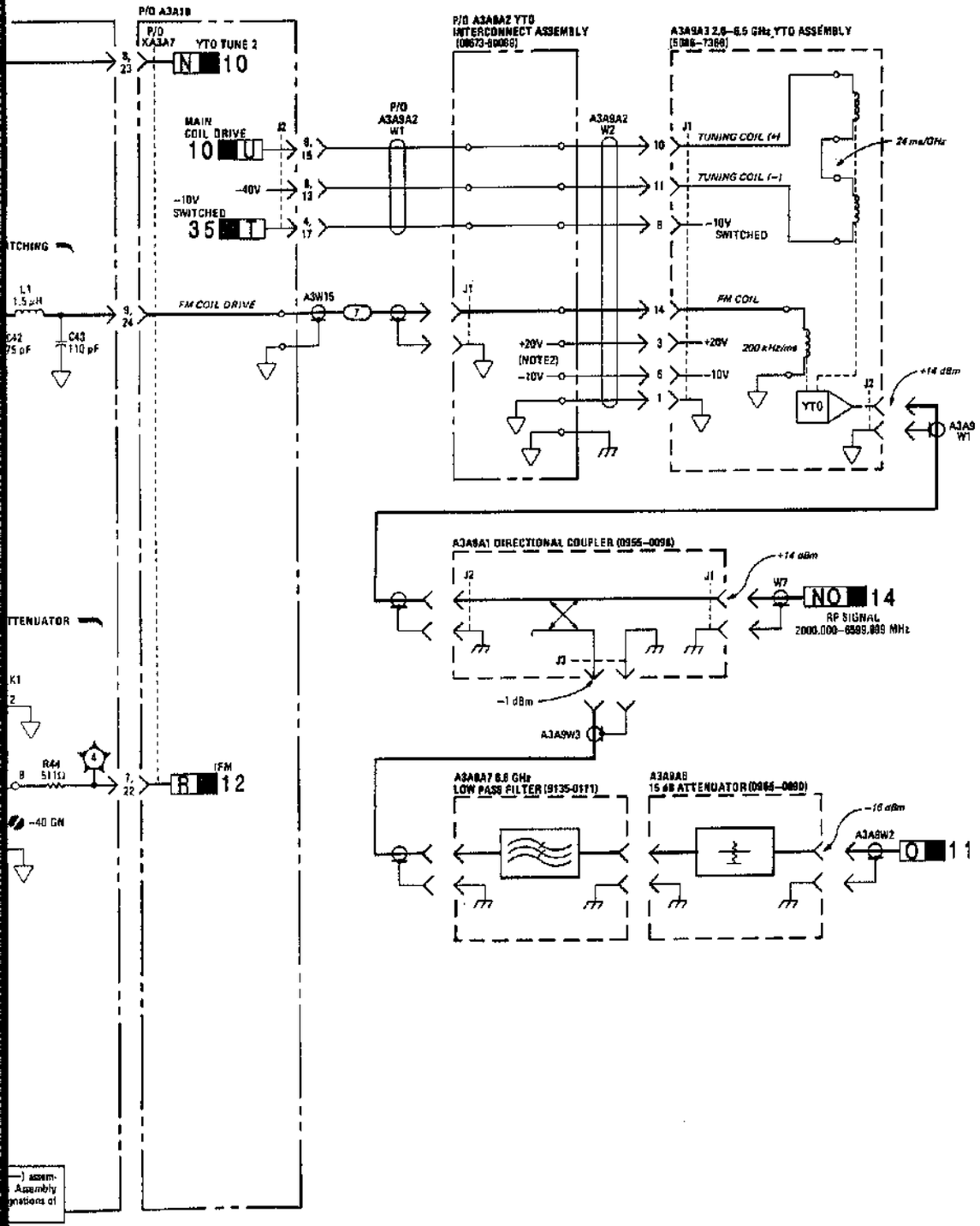


NOTES

1. REFER TO TABLE 8-1 FOR SCHEMATIC DIAGRAM NOTES.
2. POWER SUPPLY INPUTS TO A3A9A2 ARE SHOWN ON SERVICE SHEET 11
* ASTERISK INDICATES SELECTED COMPONENT, AVERAGE VALUES SHOWN.

**WARNING**

A VOLTAGE DIFFERENTIAL OF 60 Vdc MAY BE FOUND ON THE YTO AND INTERFACE BOARD. THIS VOLTAGE COULD CAUSE PERSONAL INJURY IF CONTACTED. BE CAREFUL WHILE WORKING ON THE YTO WITH POWER SUPPLIED TO THE INSTRUMENT.

REFERENCE DESIGNATIONS

| | |
|---|---|
| A1 | A3A9 |
| W1 | W1-3 |
| A3 | A3A9A1 |
| W1,15 | J1,2,3 |
| A3A7 | A3A9A2 |
| C1-50<br>CR1-7<br>K1,2<br>L1<br>Q1-15<br>R1-11,13,15-24,<br>26-63, 65-75,<br>77-86<br>TP1-6<br>U1-3 | J1<br>W1,2<br>A3A9A3<br>J1,2<br>A3A10<br>J2<br>XA3A7 |

TRANSISTOR AND INTEGRATED CIRCUIT PART NUMBERS

| REFERENCE DESIGNATIONS | PART NUMBERS |
|---|---|
| Q1 | 1854-0013 |
| Q2 | 1853-0032 |
| Q3 | 1854-0405 |
| Q4,5,11 | 1854-0404 |
| Q6 | 1854-0346 |
| Q7 | 1854-0023 |
| Q8 | 1854-0247 |
| Q9,10,14 | 1853-0451 |
| Q12 | 1855-0020 |
| Q13 | 1853-0261 |
| Q15 | 1855-0417 |
| U1 | 1826-0261 |
| U2 | 1826-0081 |
| U3 | 1826-0044 |

13
A3A7, A3A9A3

**Figure 8-226. YTO/FM Coil Driver Assembly Schematic Diagram**



www.valuetronics.com

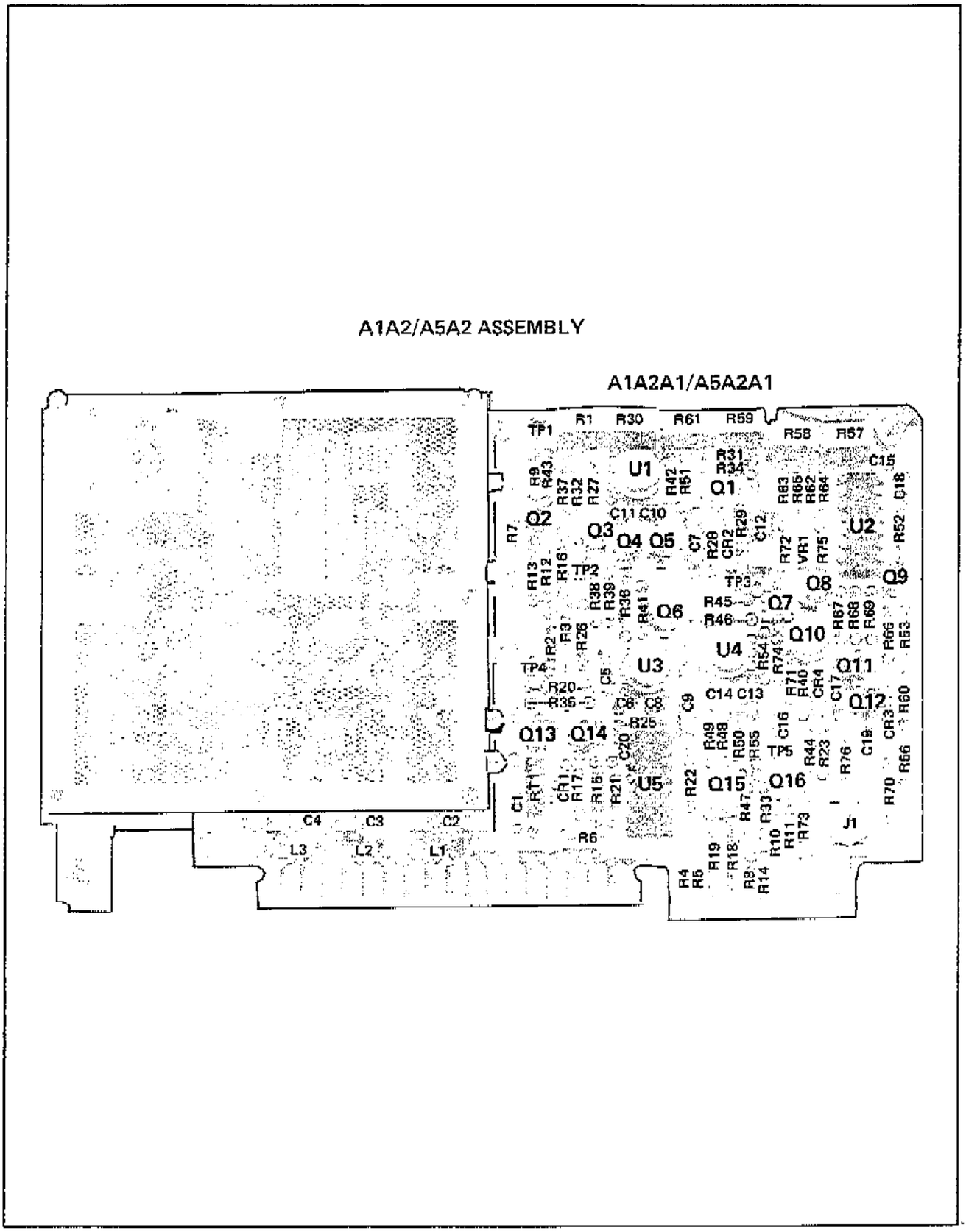


Figure 8-227. A1A2A1 Detector/ALC Assembly Component and Test Point Locations

8-227a

www.valuetronics.com

FIG. 8-228
SHT 1 of 4

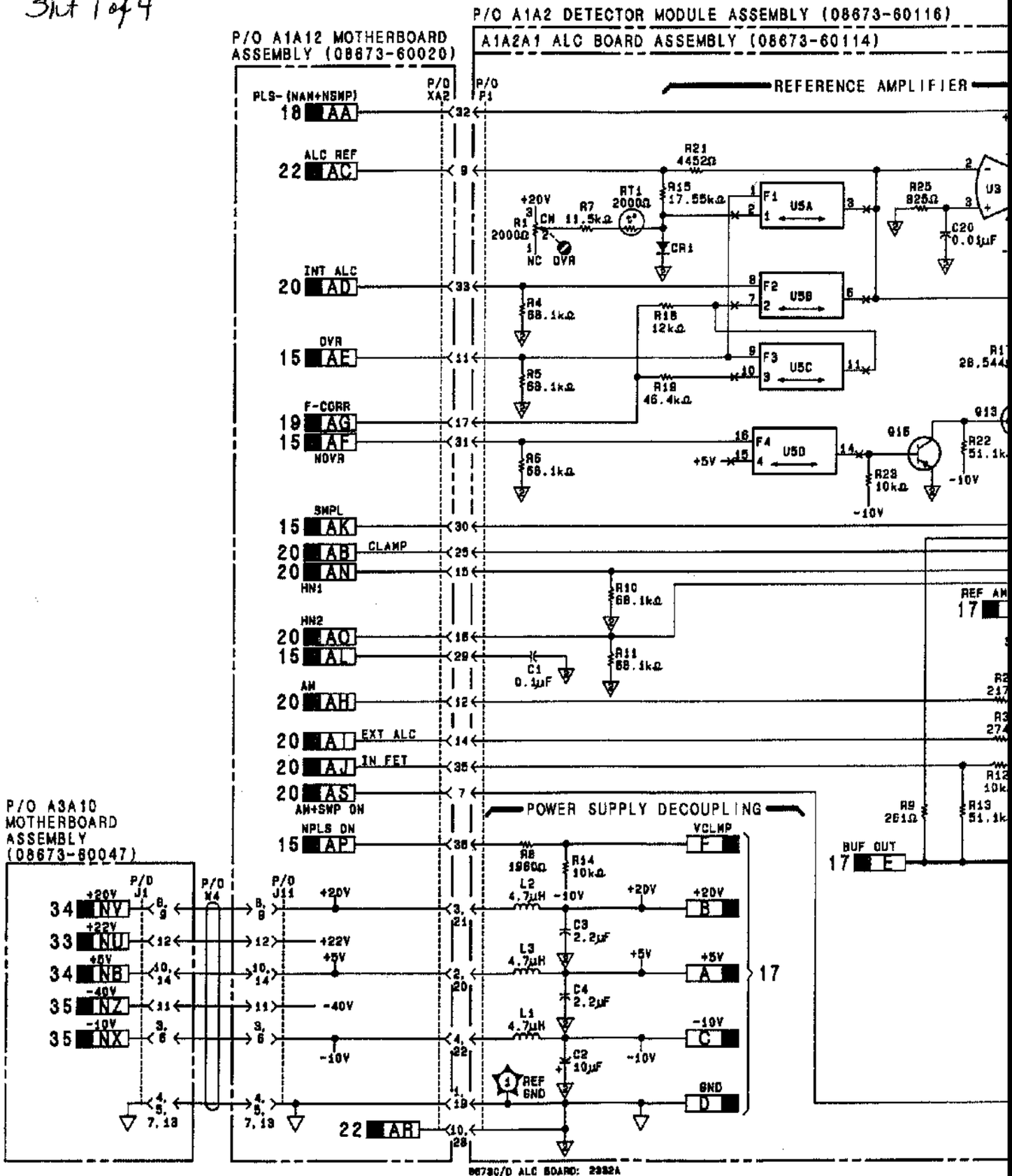


www.valuetronics.com

FIG. 8-228
Sht 2 of 4

(08673-60116)
60114)

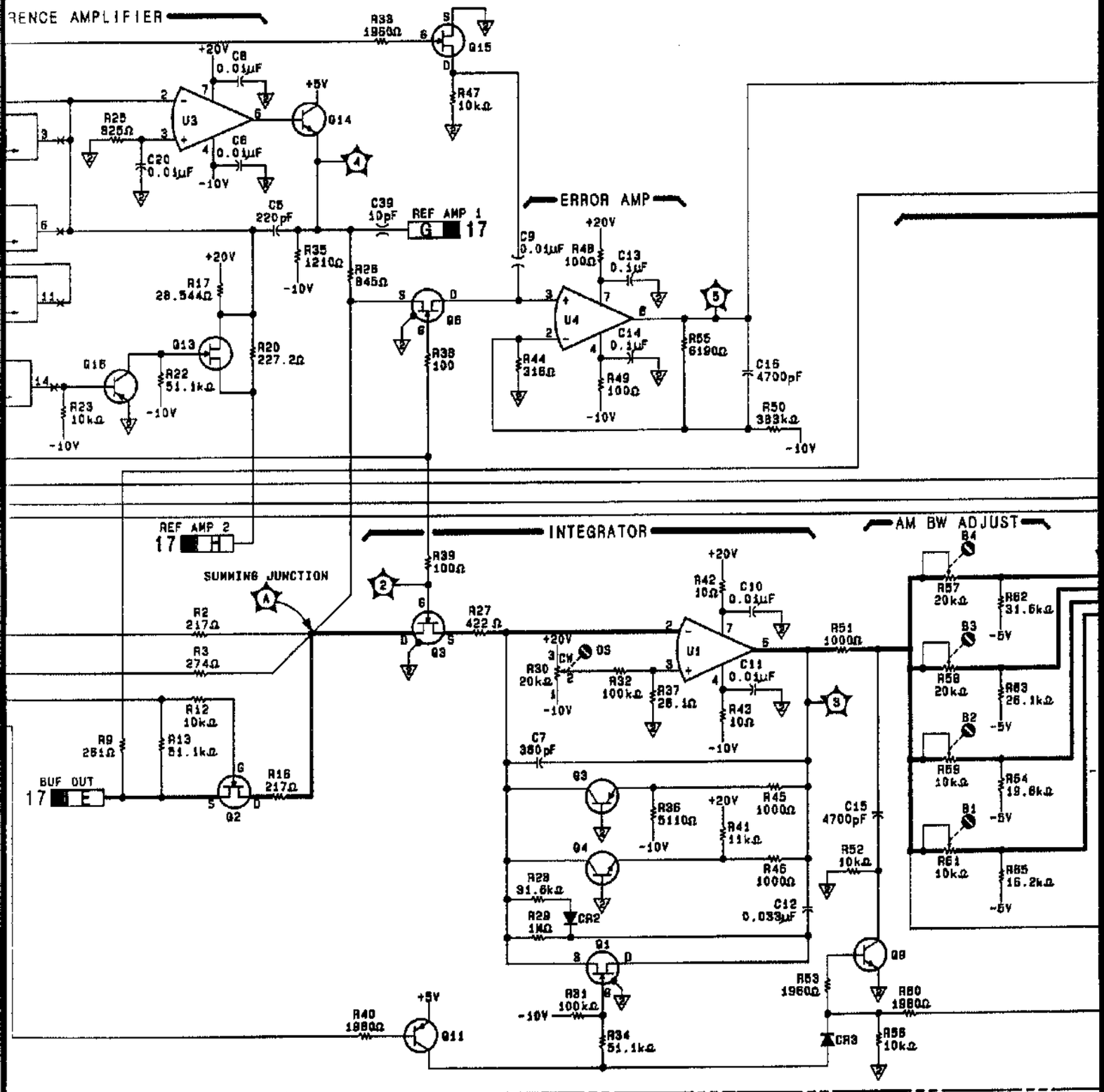


www.valuetronics.com

FIG. 8-228
SM 3 of 4

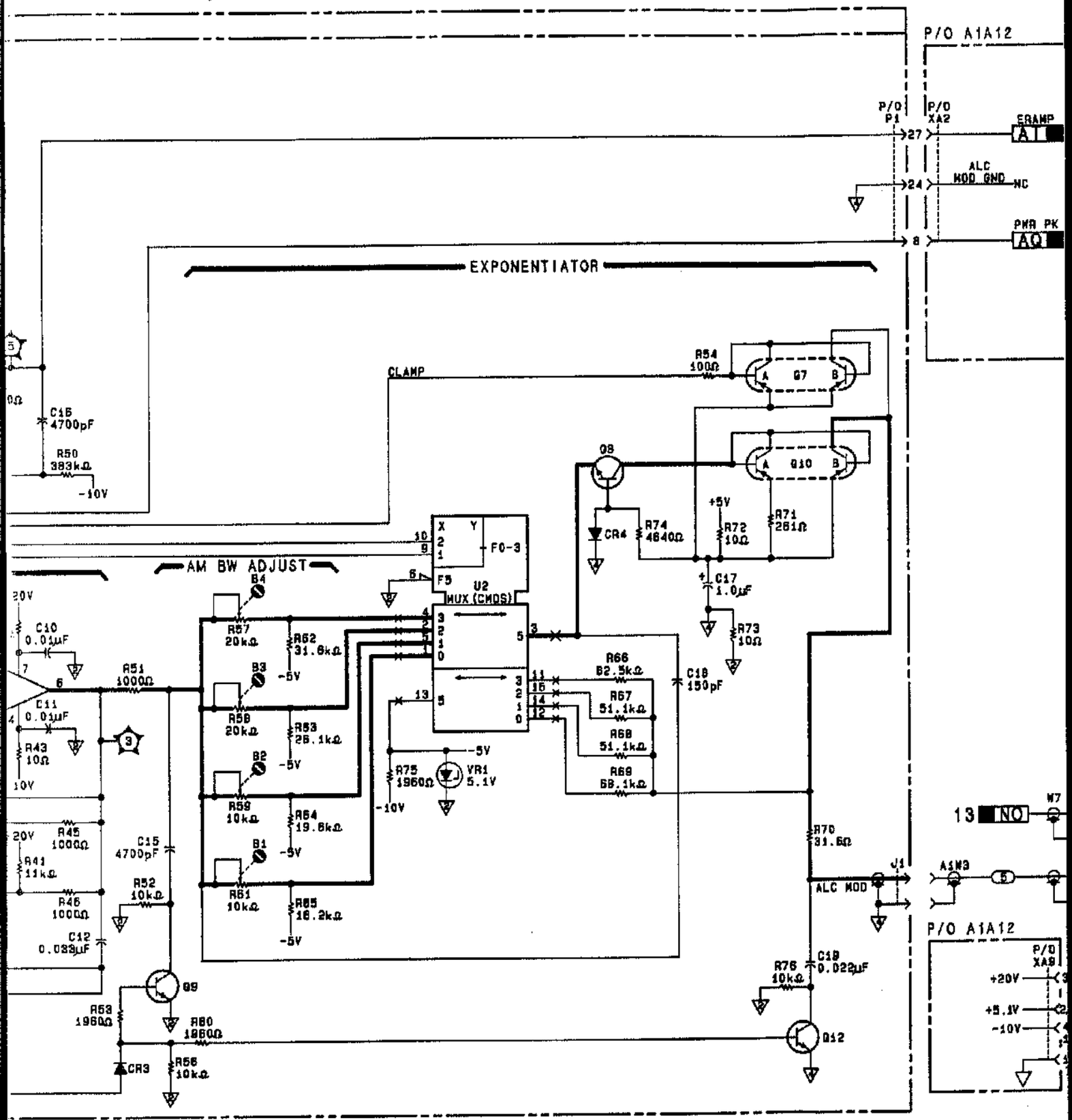


www.valuetronics.com

FIG. 8-228
Sht 4 of 4

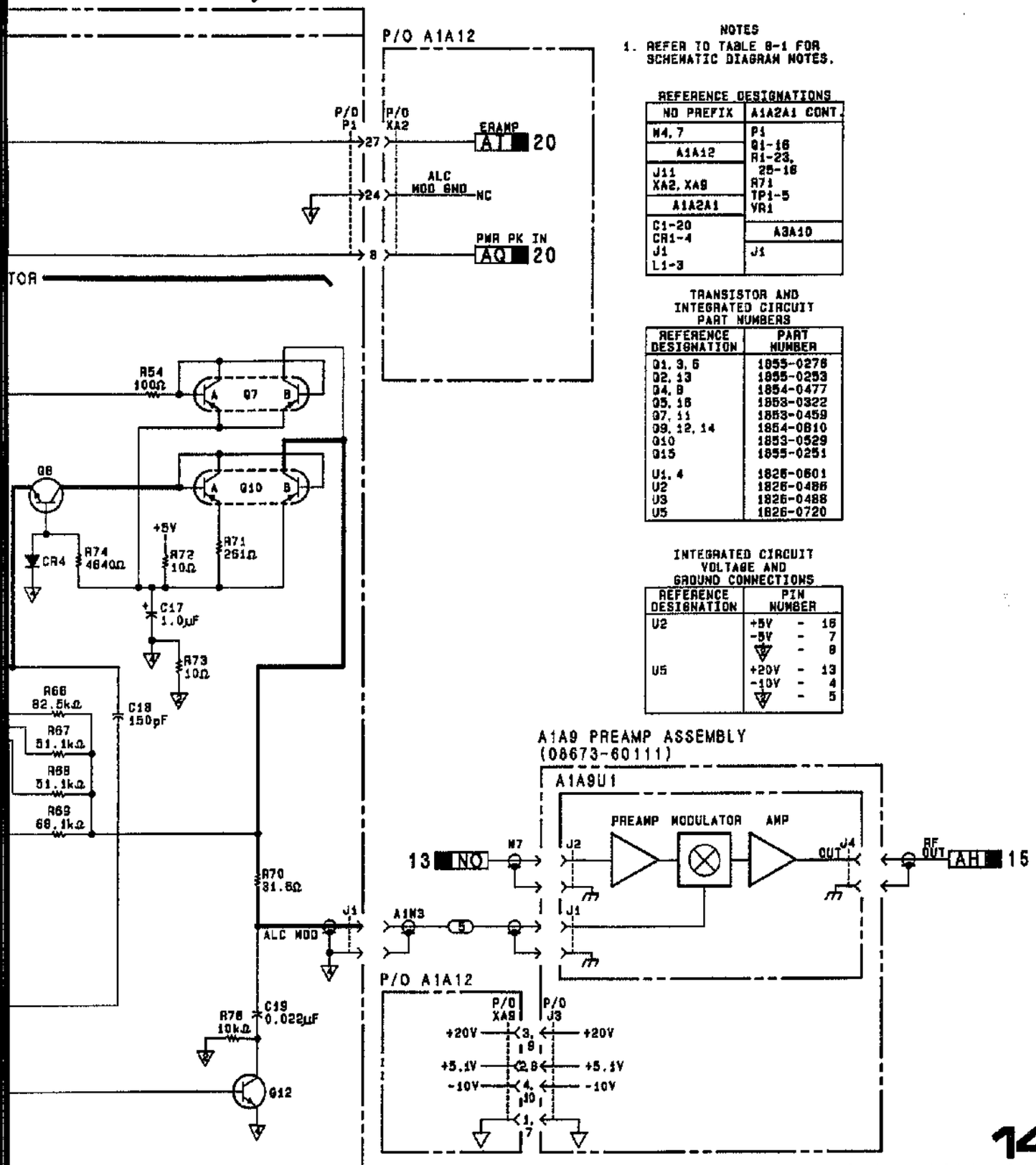


NOTES

1. REFER TO TABLE 8-1 FOR SCHEMATIC DIAGRAM NOTES.

REFERENCE DESIGNATIONS

| NO PREFIX | A1A2A1 CONT. |
|---|---|
| W4, 7 | P1 |
| A1A12 | Q1-16 |
| J11 | R1-23, 25-16 |
| XA2, XA9 | R71 |
| A1A2A1 | TP1-5 |
| C1-20 | VR1 |
| CR1-4 | A3A10 |
| J1 | J1 |
| L1-3 | |

TRANSISTOR AND INTEGRATED CIRCUIT PART NUMBERS

| REFERENCE DESIGNATION | PART NUMBER |
|---|---|
| Q1, 3, 5 | 1855-0278 |
| Q2, 13 | 1855-0253 |
| Q4, 8 | 1854-0477 |
| Q5, 15 | 1853-0322 |
| Q7, 11 | 1853-0459 |
| Q9, 12, 14 | 1854-0810 |
| Q10 | 1853-0529 |
| Q15 | 1855-0251 |
| U1, 4 | 1826-0601 |
| U2 | 1826-0486 |
| U3 | 1826-0488 |
| U5 | 1826-0720 |

INTEGRATED CIRCUIT VOLTAGE AND GROUND CONNECTIONS

| REFERENCE DESIGNATION | PIN NUMBER |
|---|---|
| U2 | +5V - 16 |
| | -5V - 7 |
| | ⏚ - 8 |
| U5 | +20V - 13 |
| | -10V - 4 |
| | ⏚ - 5 |

**14**

P/O A1A2, P/O A1A2A1, A1A9

Figure 8-228. Detector/ALC Assembly Schematic Diagram



www.valuetronics.com

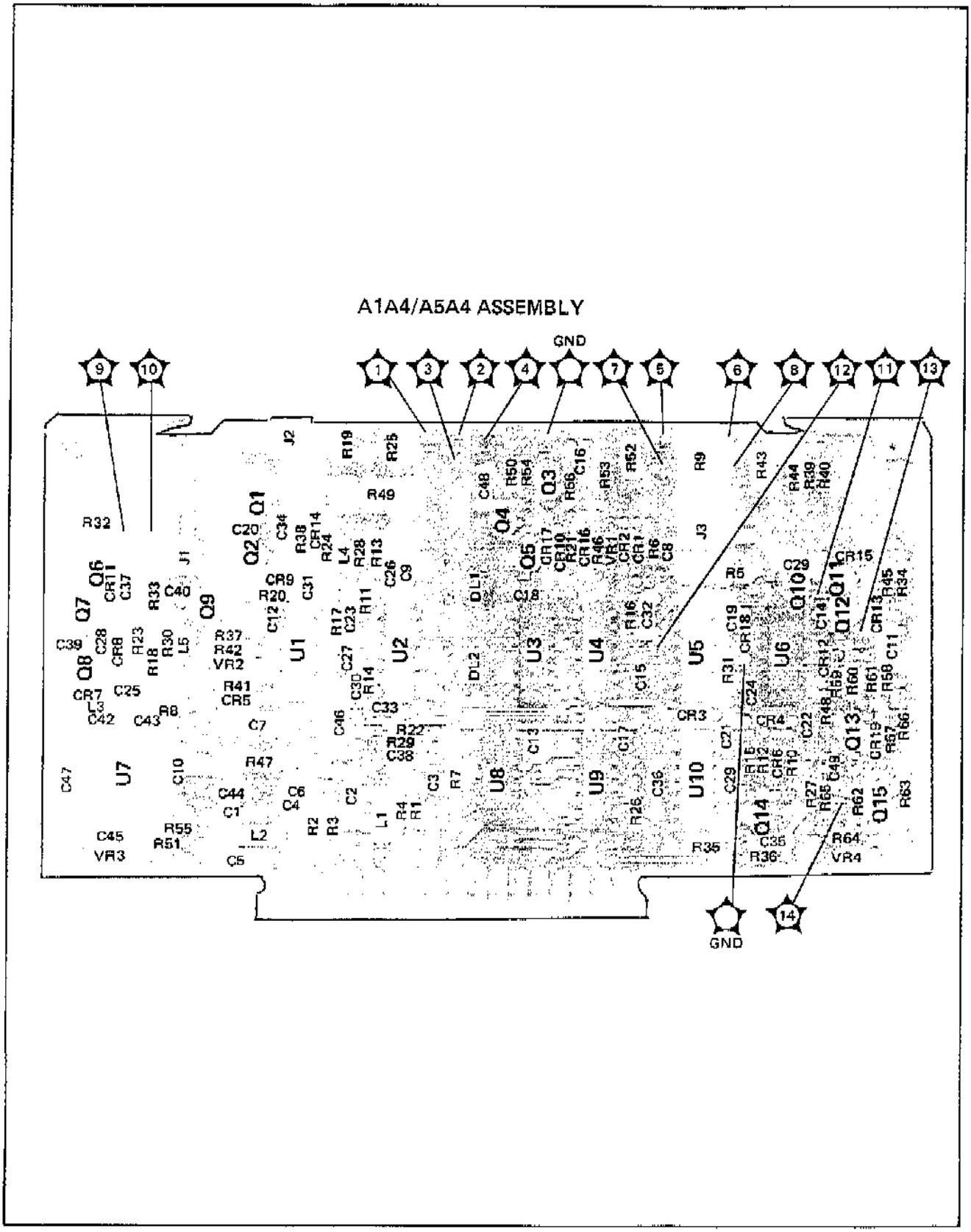


Figure 8-229. A1A4 Pulse Driver Processing Assembly Component and Test Point Location

8-229a

www.valuetronics.com

FIG. 8-230
SHT 1 of 4

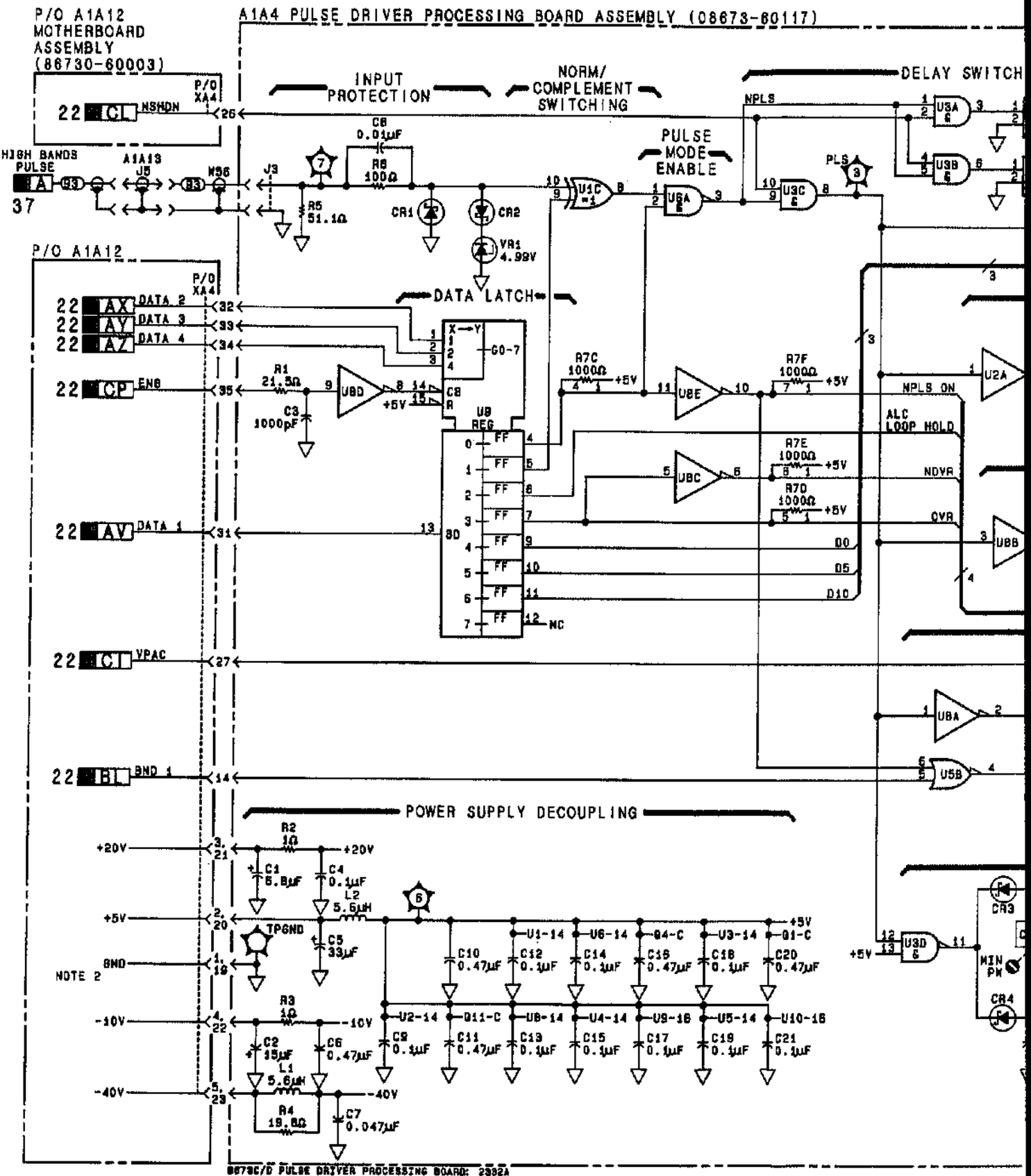


www.valuetronics.com

FIG. 8-230
SHT 2 of 4

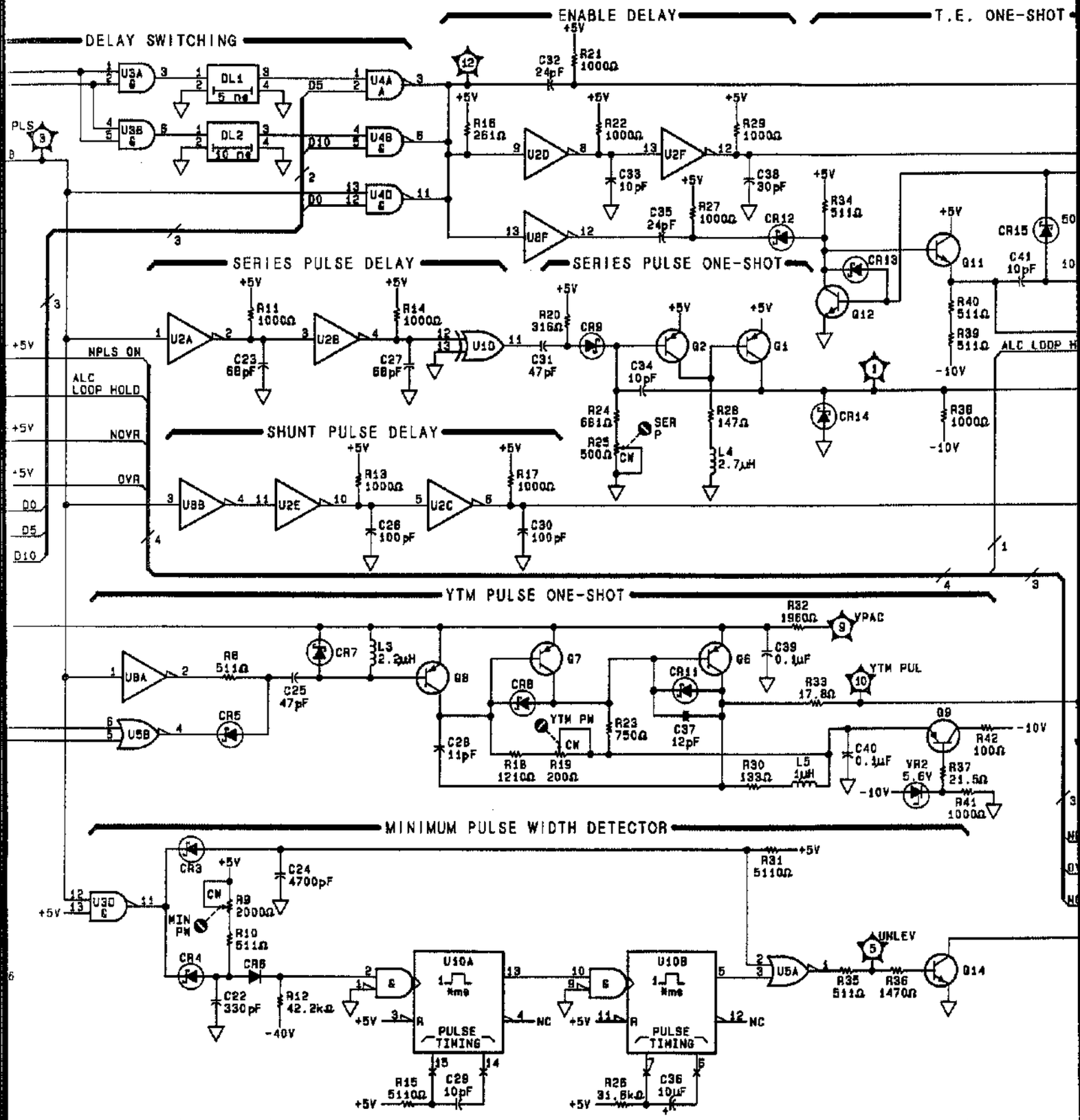


www.valuetronics.com

FIG. 8-230
Sht 3 of 4

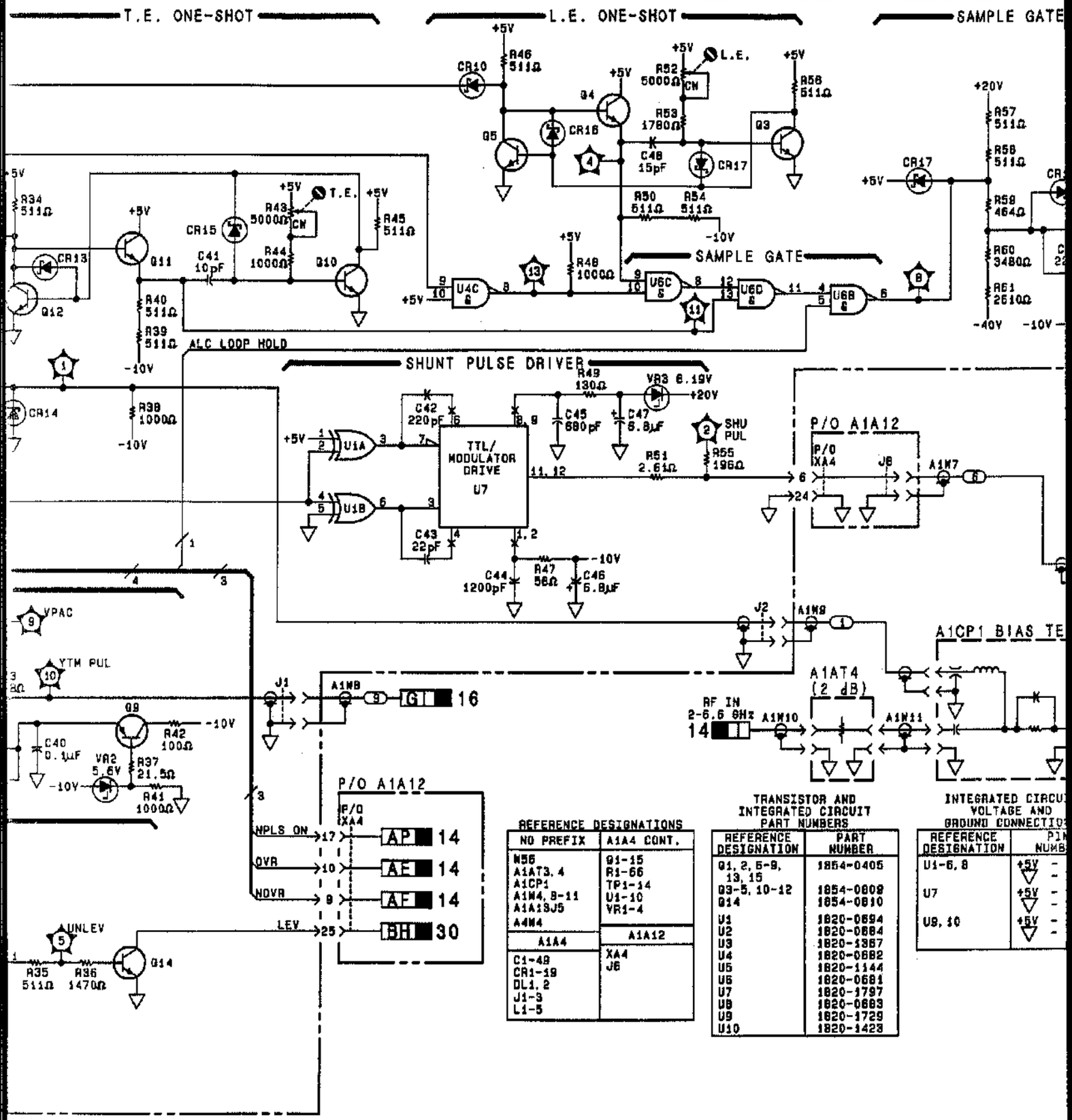


REFERENCE DESIGNATIONS

| NO PREFIX | A1A4 CONT. |
|---|---|
| W56<br>A1AT3, 4<br>A1CP1<br>A1W4, 8-11<br>A1A1SJ5<br>A4W4 | Q1-15<br>R1-66<br>TP1-14<br>U1-10<br>VR1-4 |
| **A1A4** | **A1A12** |
| C1-49<br>CR1-19<br>DL1, 2<br>J1-3<br>L1-5 | XA4<br>J6 |

TRANSISTOR AND INTEGRATED CIRCUIT PART NUMBERS

| REFERENCE DESIGNATION | PART NUMBER |
|---|---|
| Q1, 2, 5-9, 13, 15 | 1854-0405 |
| Q3-5, 10-12 | 1854-0809 |
| Q14 | 1854-0810 |
| U1 | 1820-0694 |
| U2 | 1820-0684 |
| U3 | 1820-1367 |
| U4 | 1820-0682 |
| U5 | 1820-1144 |
| U6 | 1820-0681 |
| U7 | 1820-1797 |
| U8 | 1820-0683 |
| U9 | 1820-1729 |
| U10 | 1820-1428 |

INTEGRATED CIRCUIT VOLTAGE AND GROUND CONNECTIONS

| REFERENCE DESIGNATION | PIN NUMBER |
|---|---|
| U1-6, 8 | +5V ▽ -<br>- |
| U7 | +5V ▽ -<br>- |
| U8, 10 | +5V ▽ -<br>- |

www.valuetronics.com

FIG. 8-230
Sht 4 of 4

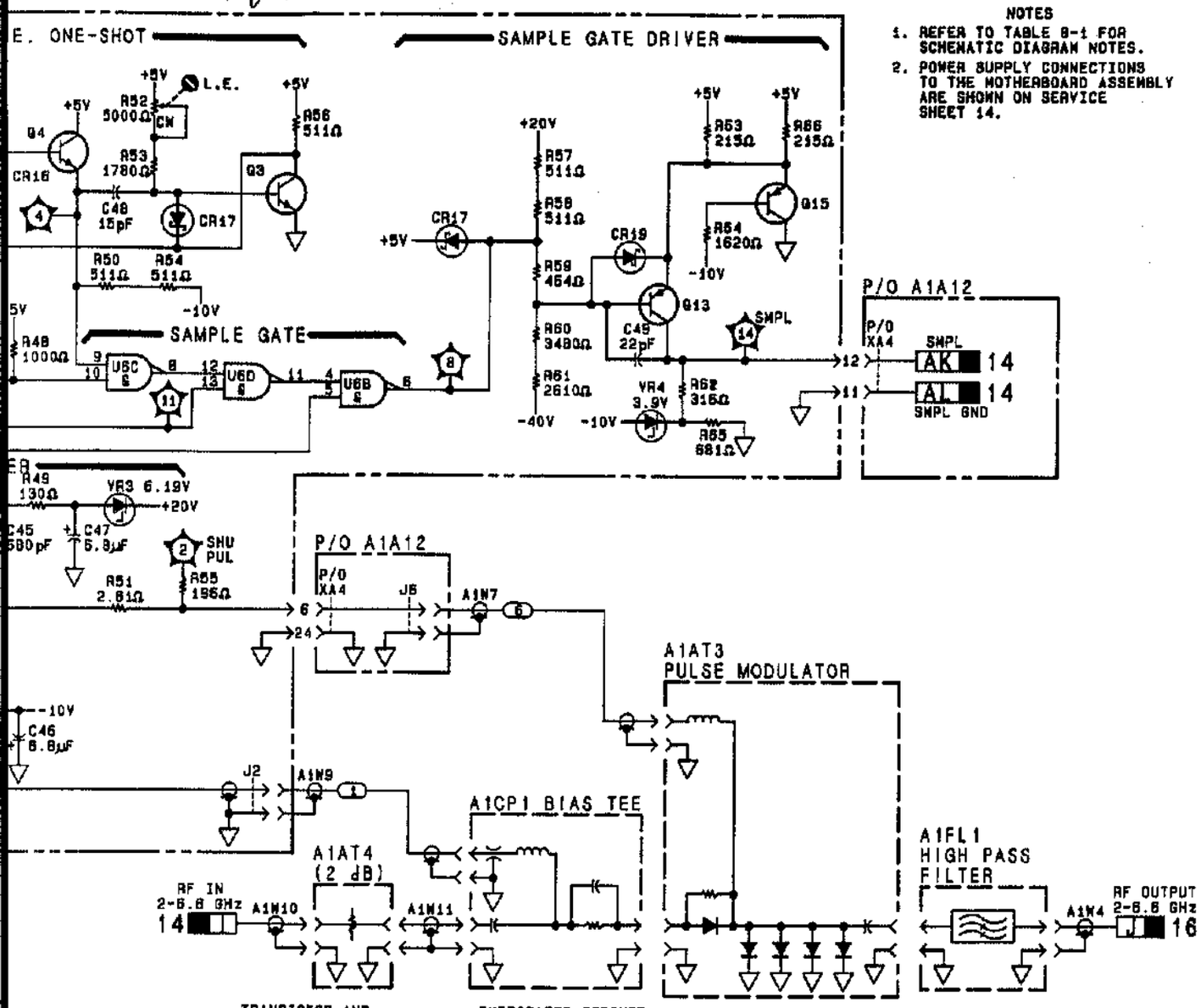


CE DESIGNATIONS

| IX | A1A4 CONT. |
|---|---|
| | D1-15<br>R1-66<br>TP1-14<br>U1-10<br>VR1-4 |
| | A1A12 |
| | XA4<br>J6 |

TRANSISTOR AND INTEGRATED CIRCUIT PART NUMBERS

| REFERENCE DESIGNATION | PART NUMBER |
|---|---|
| Q1, 2, 6-9, 13, 15 | 1854-0405 |
| Q3-5, 10-12 | 1854-0809 |
| Q14 | 1854-0810 |
| U1 | 1820-0694 |
| U2 | 1820-0684 |
| U3 | 1820-1357 |
| U4 | 1820-0682 |
| U5 | 1820-1144 |
| U6 | 1820-0681 |
| U7 | 1820-1797 |
| U8 | 1820-0683 |
| U9 | 1820-1729 |
| U10 | 1820-1423 |

INTEGRATED CIRCUIT VOLTAGE AND GROUND CONNECTIONS

| REFERENCE DESIGNATION | PIN NUMBER |
|---|---|
| U1-6, 8 | +5V - 14<br>▽ - 7 |
| U7 | +5V - 10<br>▽ - 5 |
| U9, 10 | +5V - 16<br>▽ - 8 |

15
A1A4

Figure 8-230. Pulse Driver Processing Assembly Schematic



www.valuetronics.com

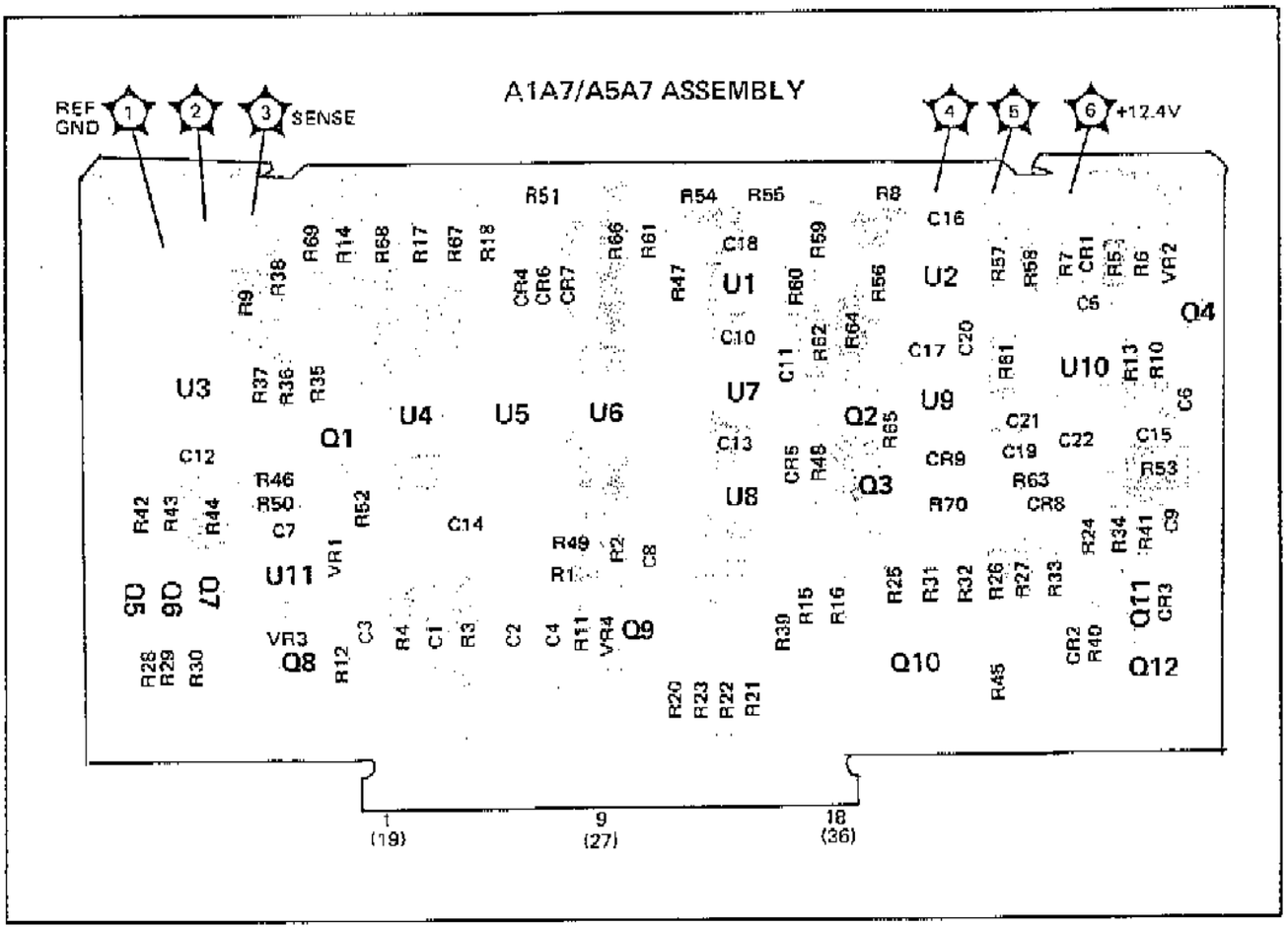


Figure 8-231. A1A7 YIG Driver Board Assembly Component and Test Point Location

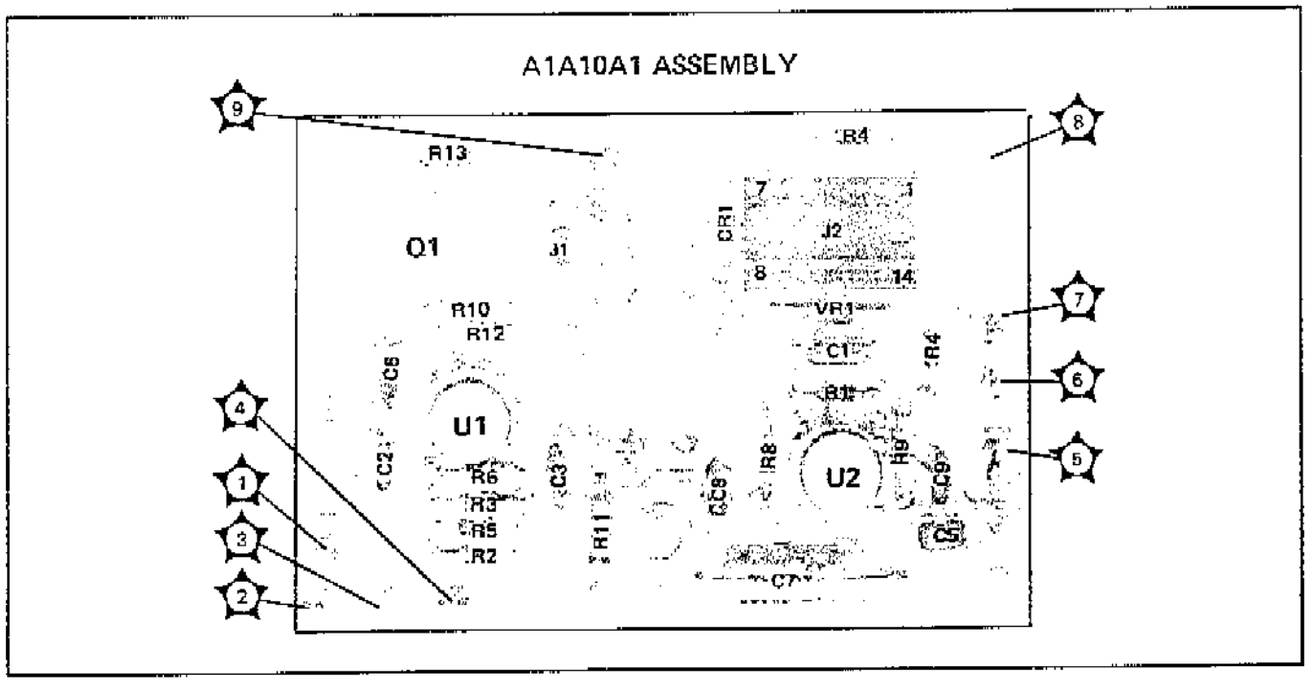


Figure 8-232. A1A10A1 YIG Assembly Component and Test Point Location

8-231a

www.valuetronics.com

FIG. 8-233
SHT 1 of 4

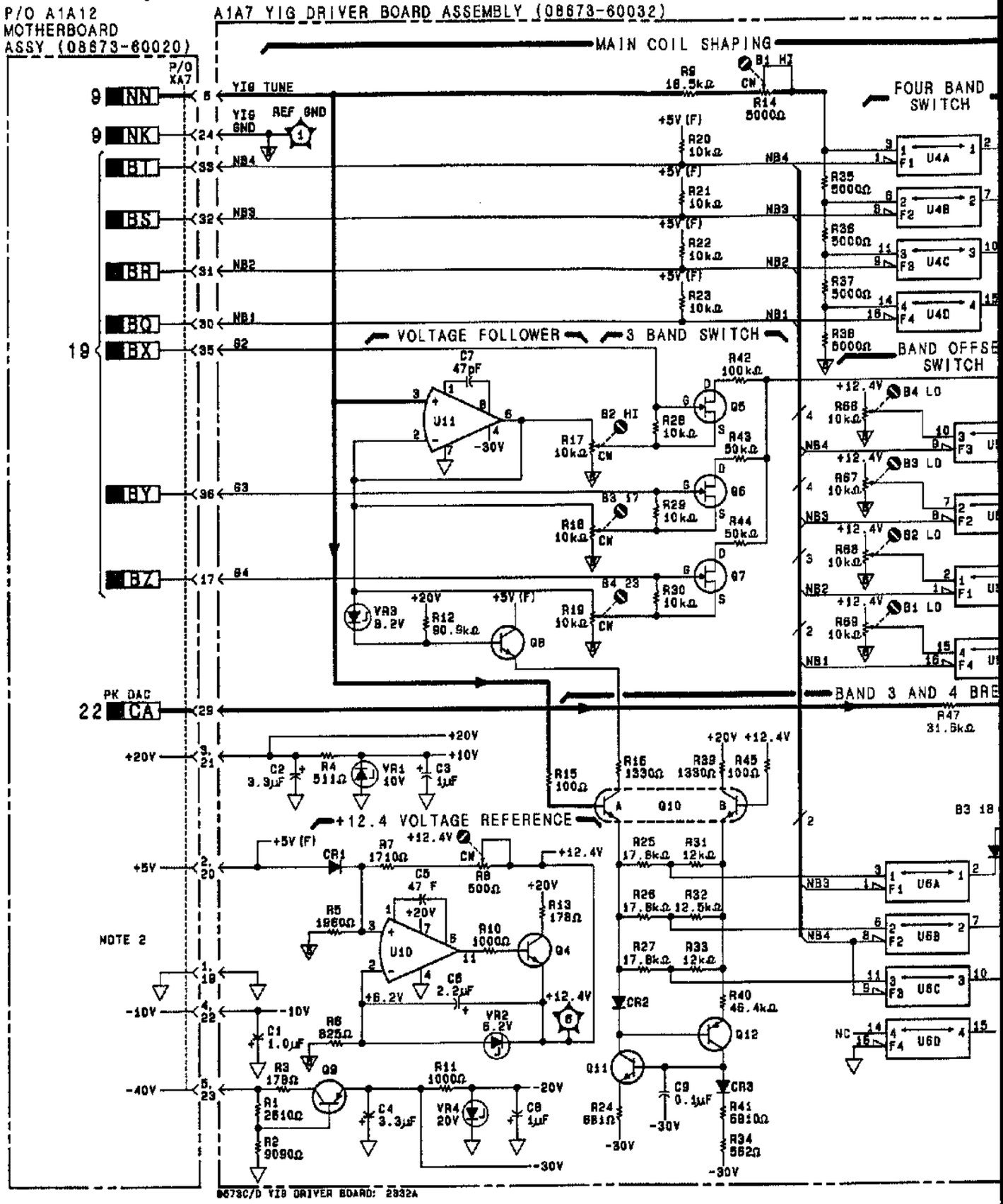


www.valuetronics.com

FIG. 8-233
Sht 2 of 4

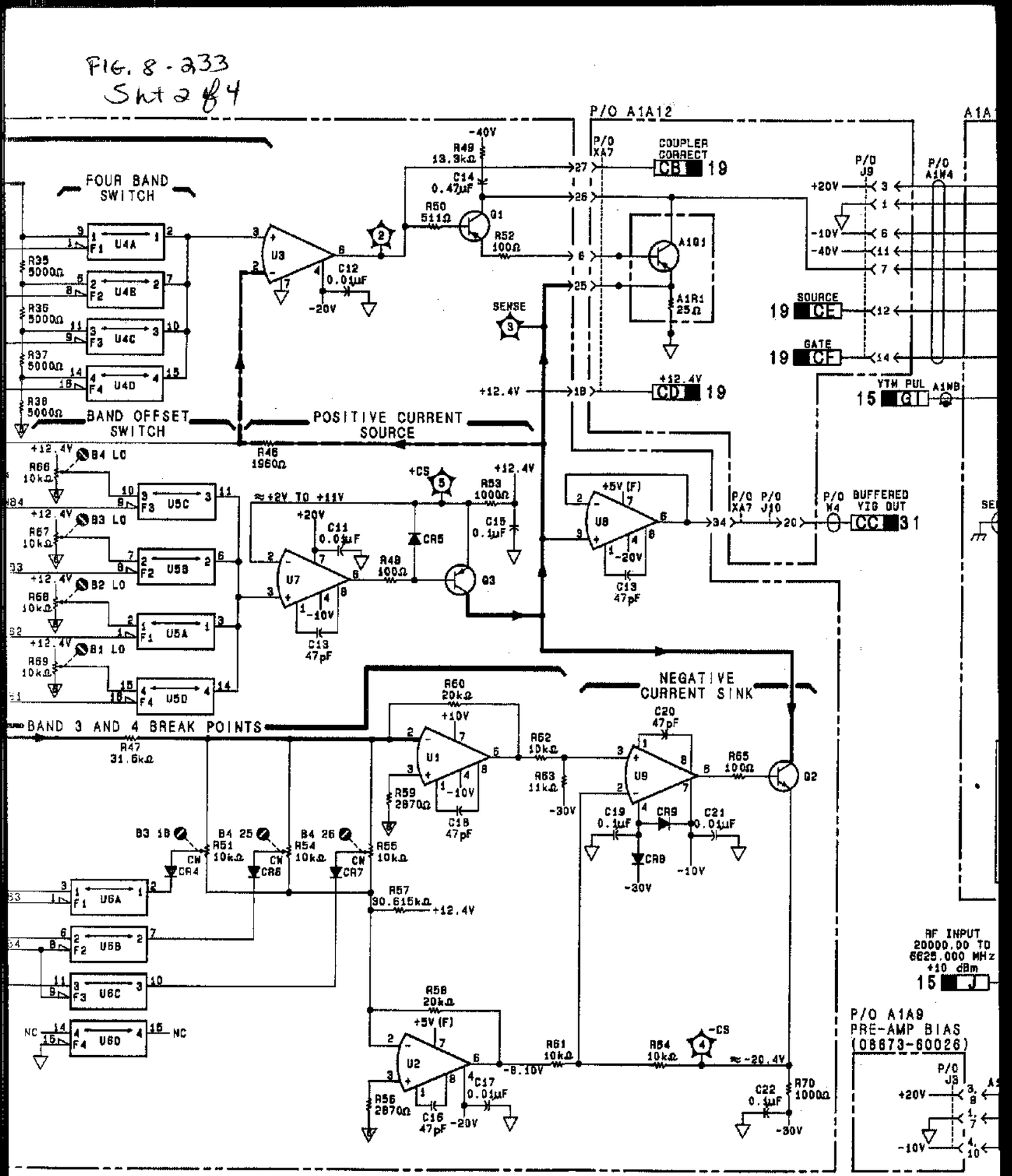


www.valuetronics.com

FIG. 8-233
Sht 3 of 4

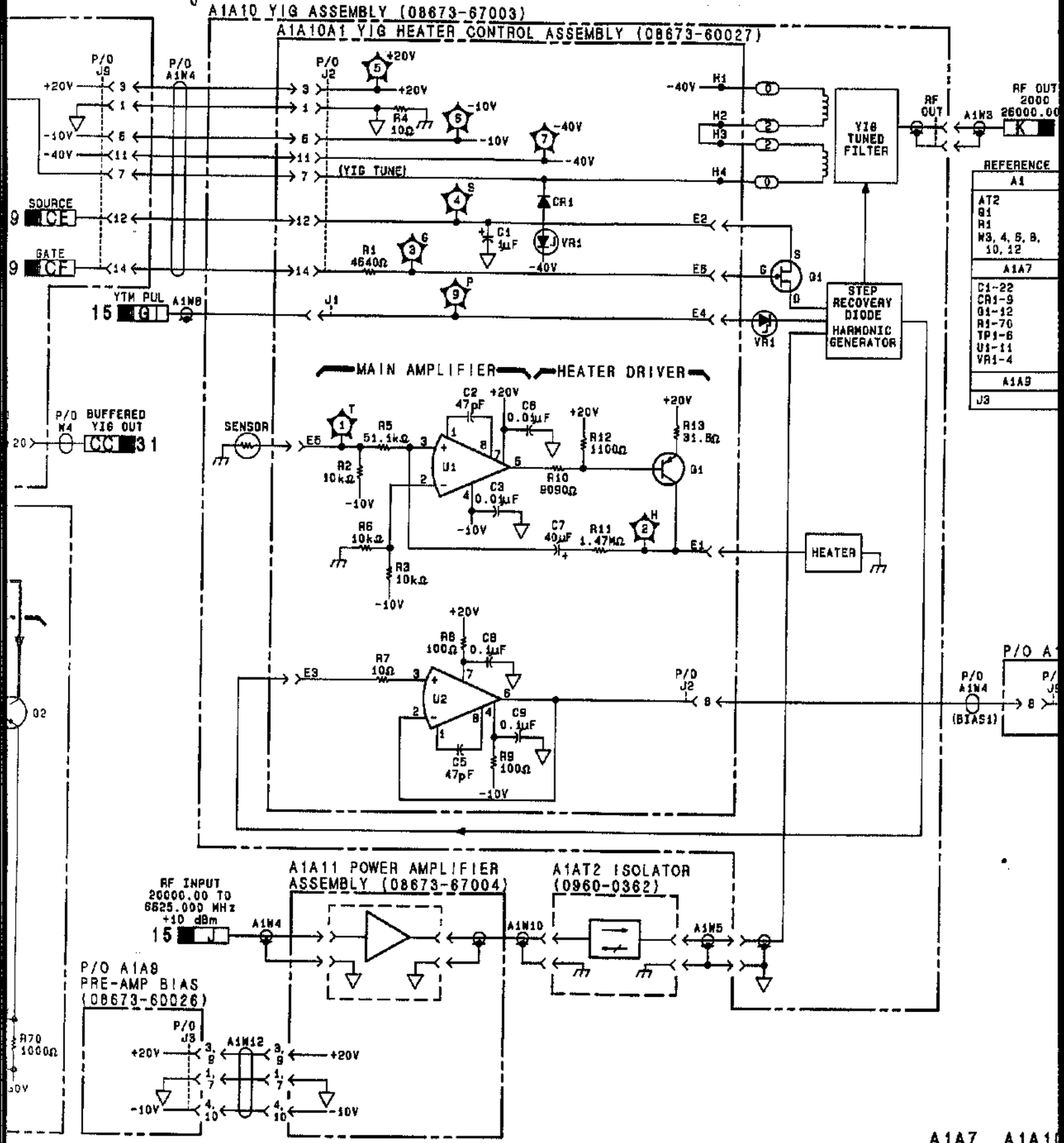


A1A7, A1A1

Figure 8-233

www.valuetronics.com

FIG. 8-233
Sht 4 of 4

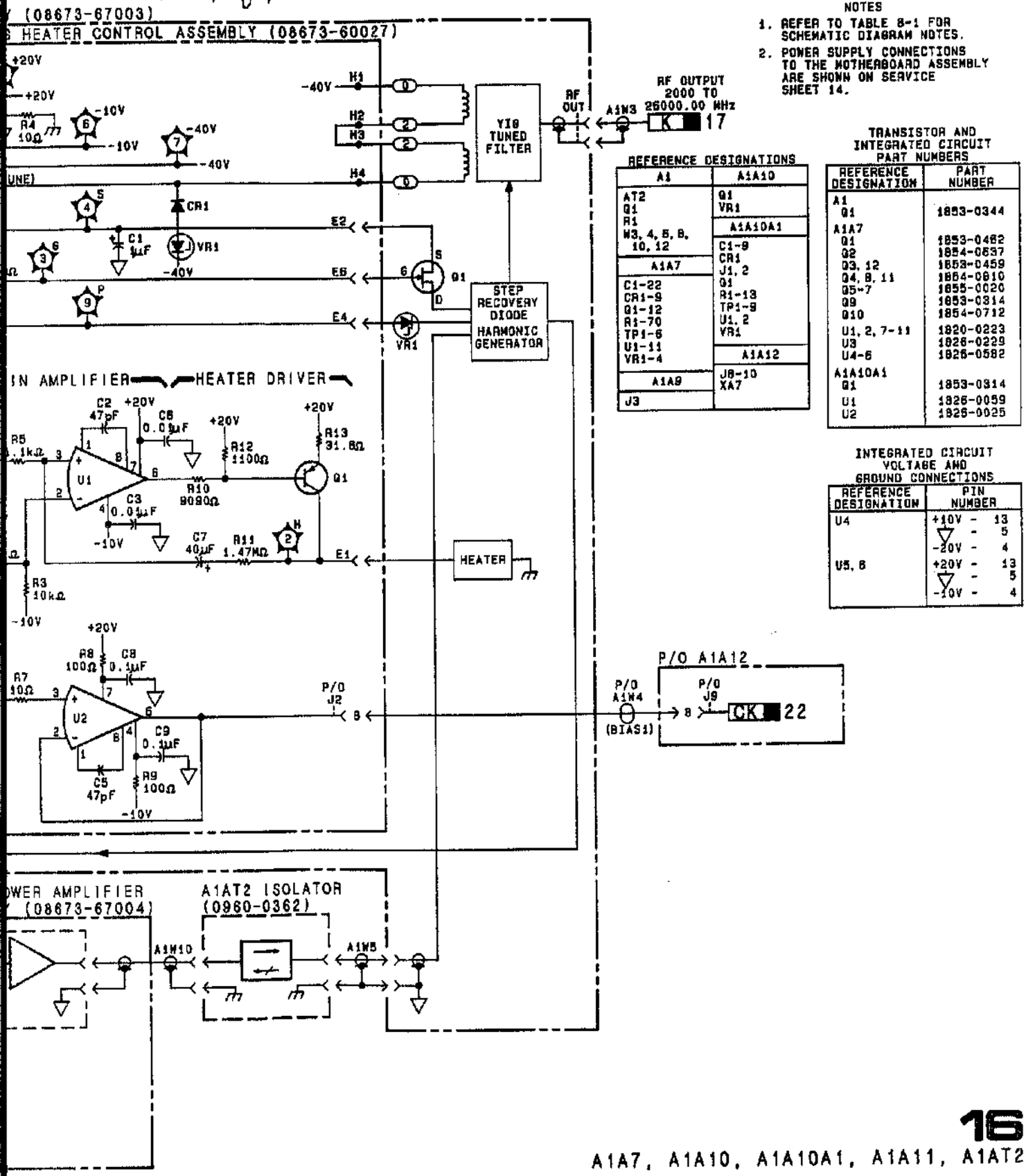


NOTES

1. REFER TO TABLE 8-1 FOR SCHEMATIC DIAGRAM NOTES.
2. POWER SUPPLY CONNECTIONS TO THE MOTHERBOARD ASSEMBLY ARE SHOWN ON SERVICE SHEET 14.

REFERENCE DESIGNATIONS

| A1 | A1A10 |
|---|---|
| AT2<br>Q1<br>R1<br>W3, 4, 5, 8, 10, 12 | Q1<br>VR1 |
| **A1A7** | **A1A10A1** |
| C1-22<br>CR1-9<br>Q1-12<br>R1-70<br>TP1-6<br>U1-11<br>VR1-4 | C1-9<br>CR1<br>J1, 2<br>Q1<br>R1-13<br>TP1-9<br>U1, 2<br>VR1 |
| **A1A9** | **A1A12** |
| J3 | J8-10<br>XA7 |

TRANSISTOR AND INTEGRATED CIRCUIT PART NUMBERS

| REFERENCE DESIGNATION | PART NUMBER |
|---|---|
| A1 | |
| Q1 | 1853-0344 |
| A1A7 | |
| Q1 | 1853-0462 |
| Q2 | 1854-0637 |
| Q3, 12 | 1853-0459 |
| Q4, 8, 11 | 1854-0810 |
| Q5-7 | 1855-0020 |
| Q9 | 1853-0314 |
| Q10 | 1854-0712 |
| U1, 2, 7-11 | 1820-0223 |
| U3 | 1826-0229 |
| U4-6 | 1826-0582 |
| A1A10A1 | |
| Q1 | 1853-0314 |
| U1 | 1826-0059 |
| U2 | 1826-0025 |

INTEGRATED CIRCUIT VOLTAGE AND GROUND CONNECTIONS

| REFERENCE DESIGNATION | PIN NUMBER | |
|---|---|---|
| U4 | +10V | 13 |
| | ▽ | 5 |
| | -20V | 4 |
| U5, 6 | +20V | 13 |
| | ▽ | 5 |
| | -10V | 4 |

16

A1A7, A1A10, A1A10A1, A1A11, A1AT2

Figure 8-233. YIG Driver Assembly Schematic Diagram



www.valuetronics.com

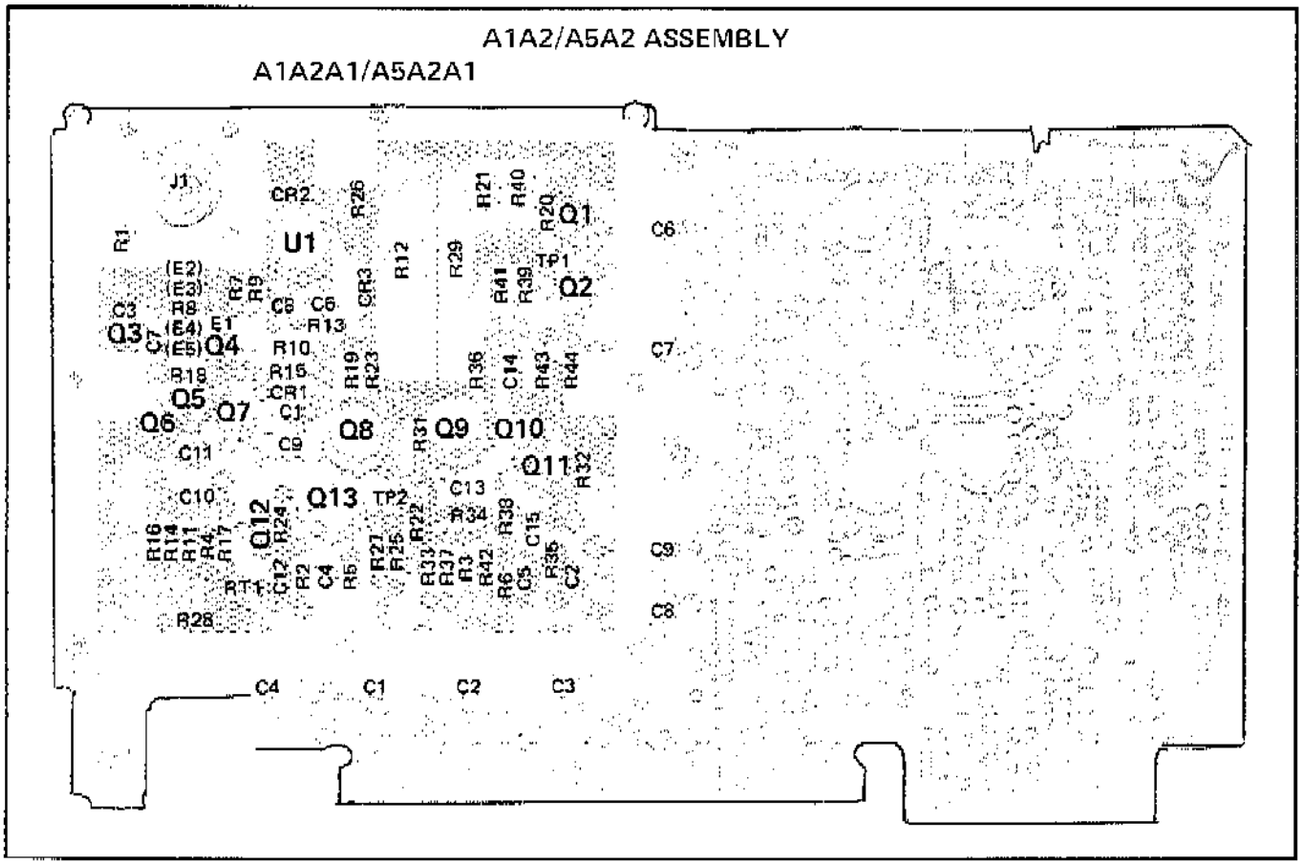


Figure 8-234. A1A2A2 Detector Board Assembly Component and Test Point Location

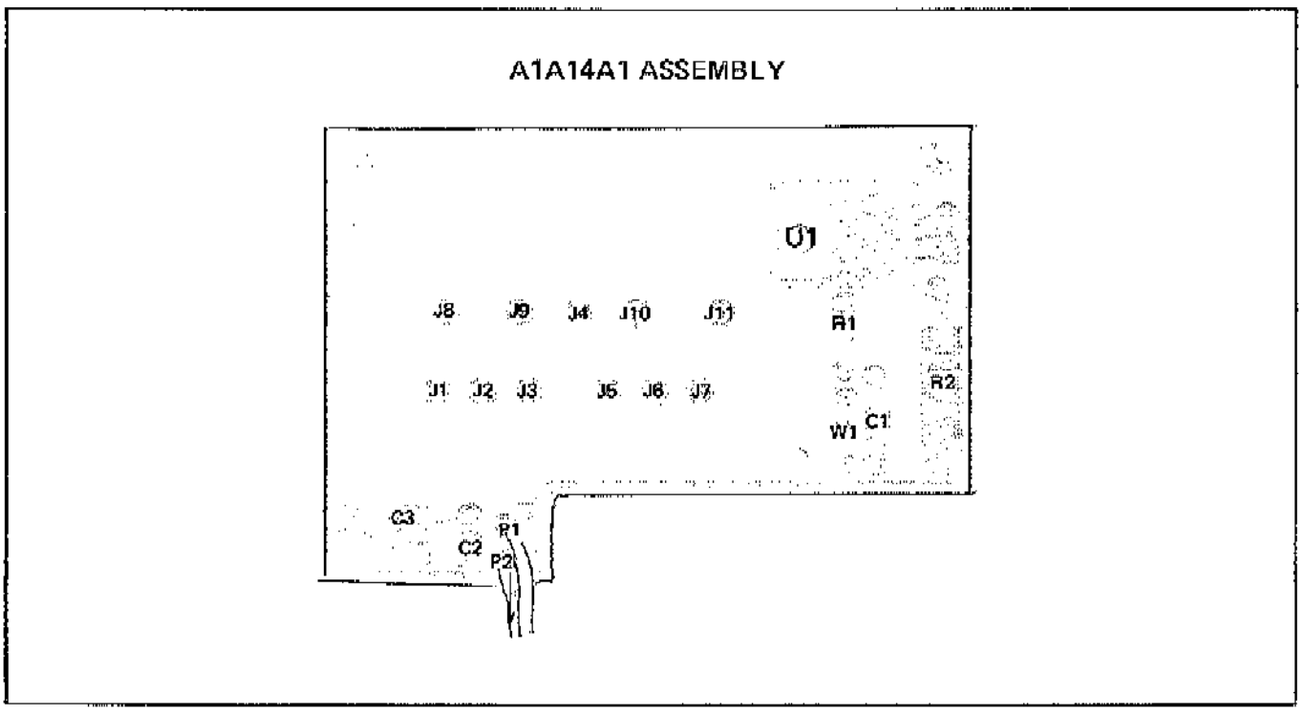


Figure 8-235. A1A14A1 Bias Board Assembly Component and Test Point Location



www.valuetronics.com

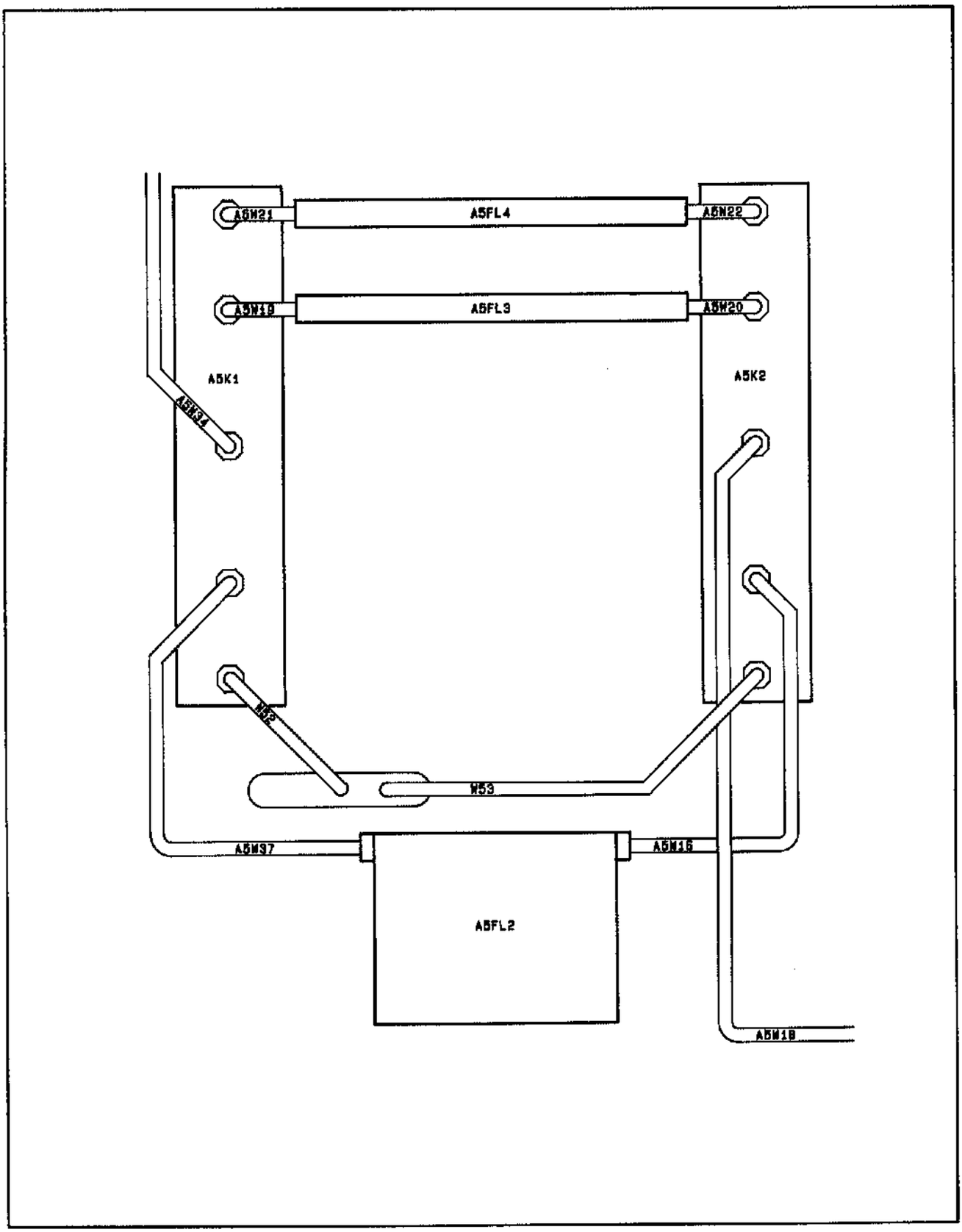


Figure 8-236. RF Filter Circuits Component Location (8673C)



www.valuetronics.com

HP 8673C Only

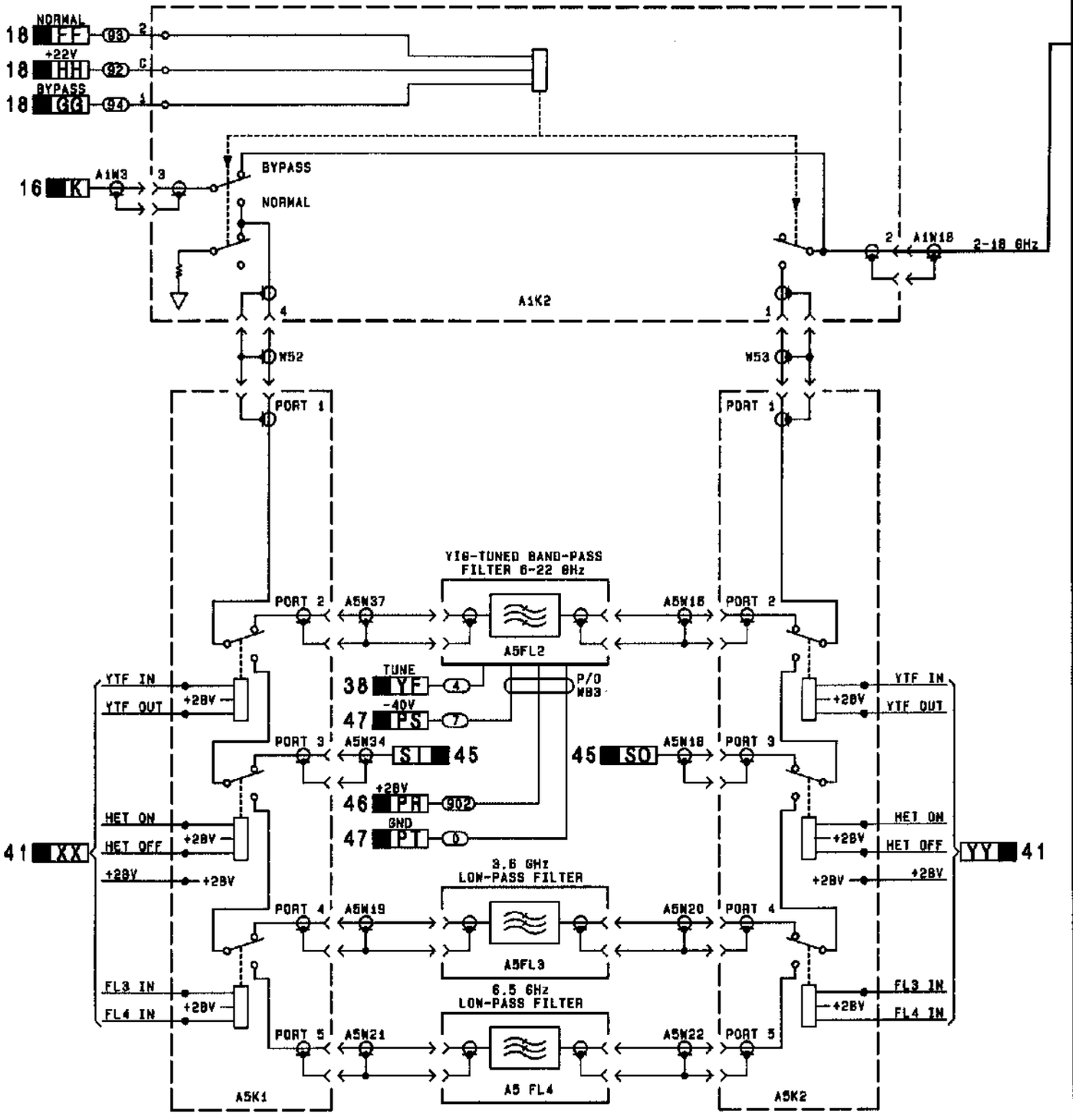


Figure 8-237. P/O RF Filter, RF Amplifier, and Detector Amplifier Circuits (to be used with Figure 8-239)



www.valuetronics.com

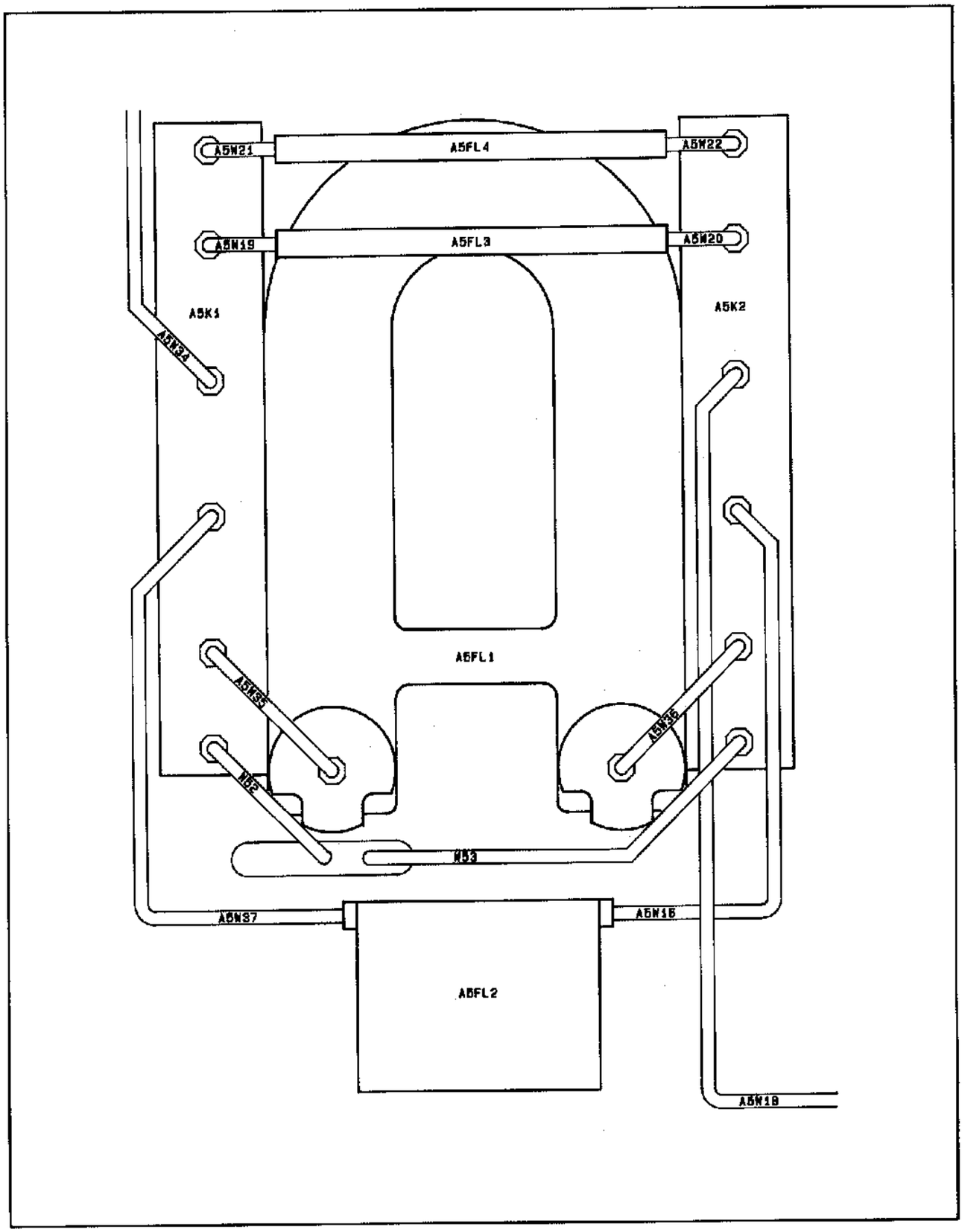


Figure 8-238. RF Filter Circuits Component Location (8673D)



www.valuetronics.com

F16.8-239
Sht 1 of 5

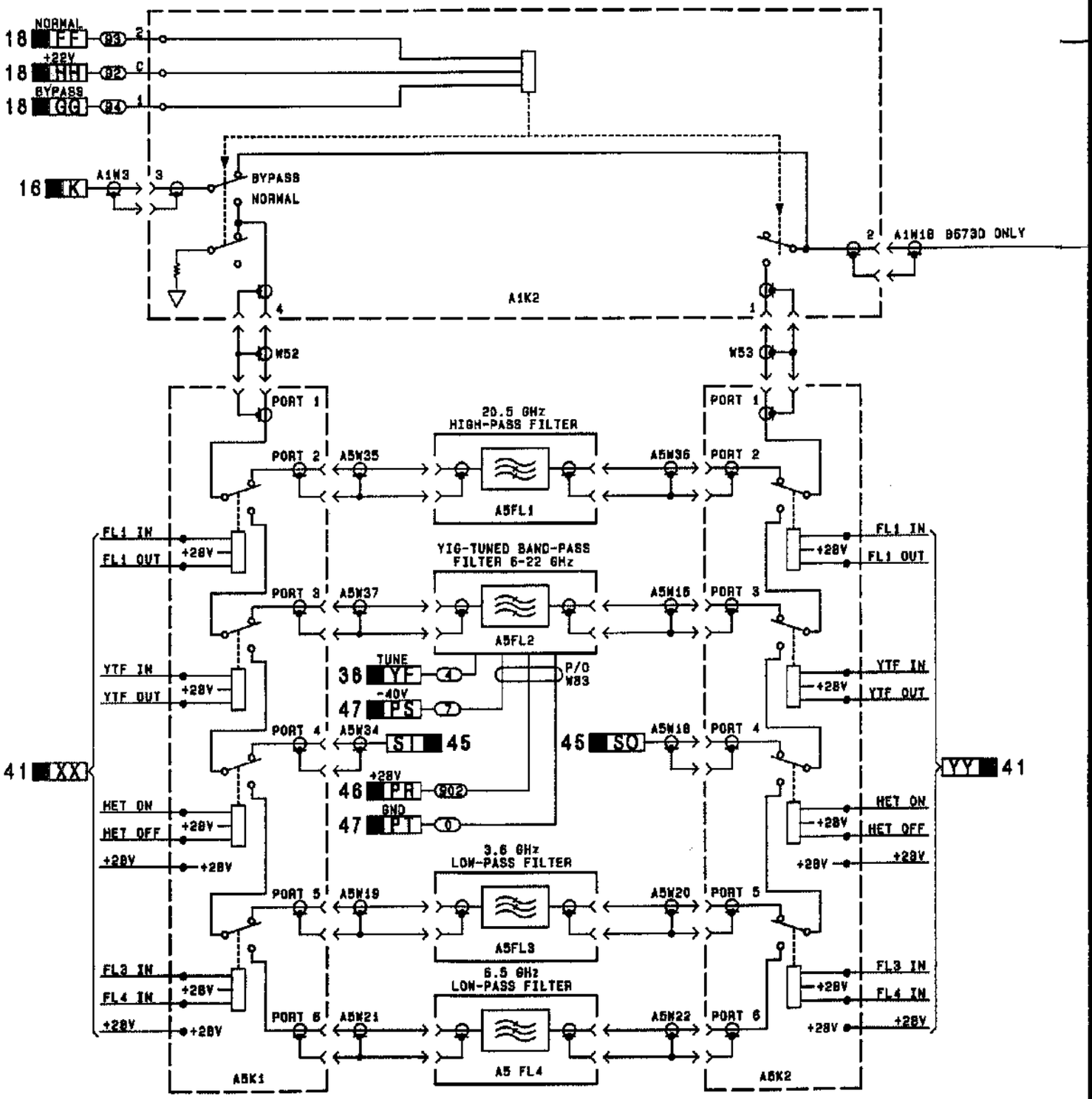


www.valuetronics.com

FIG. 8-239
Sht 2 of 5

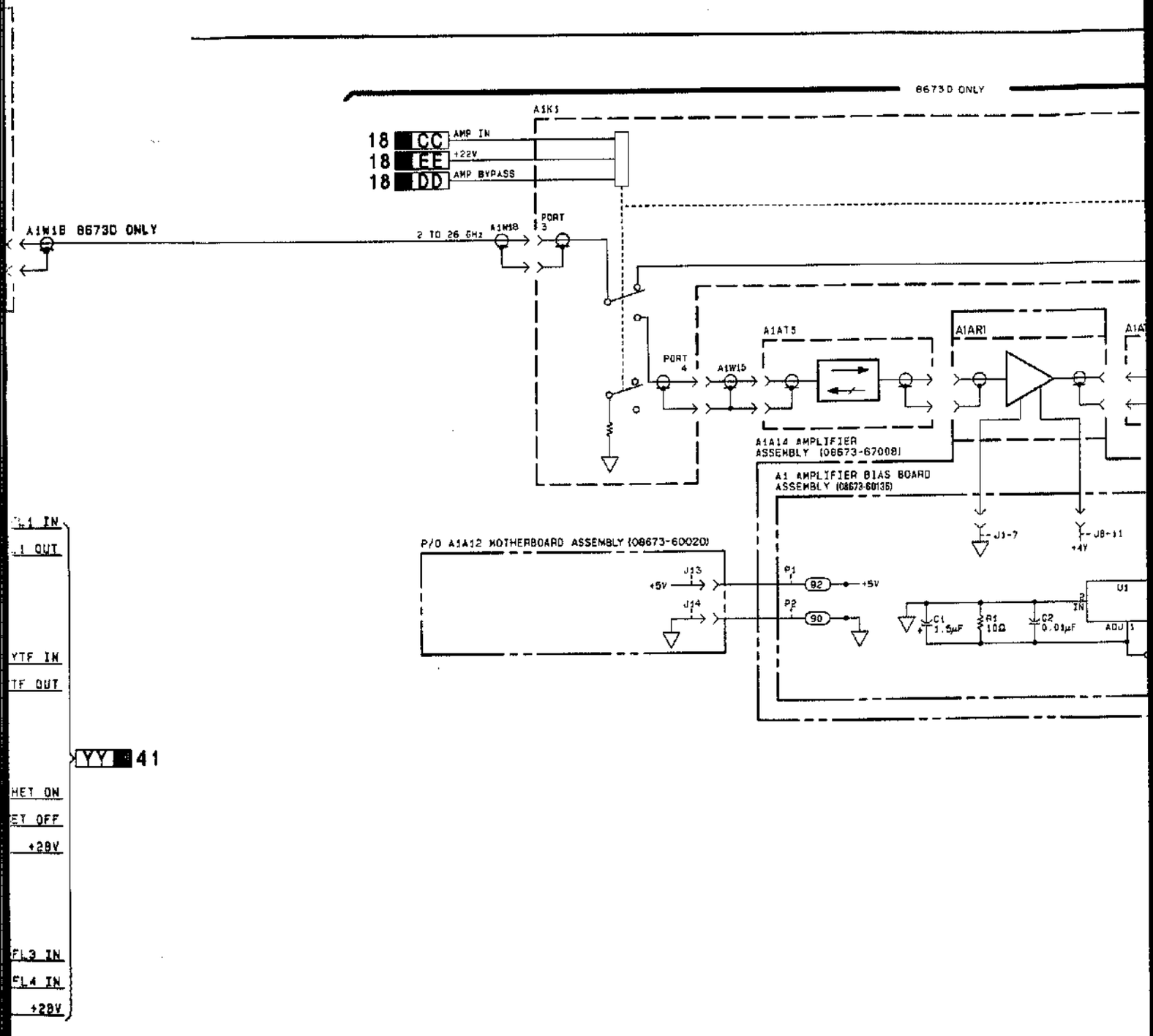


www.valuetronics.com

FIG. 8-239
SHT 3 of 5

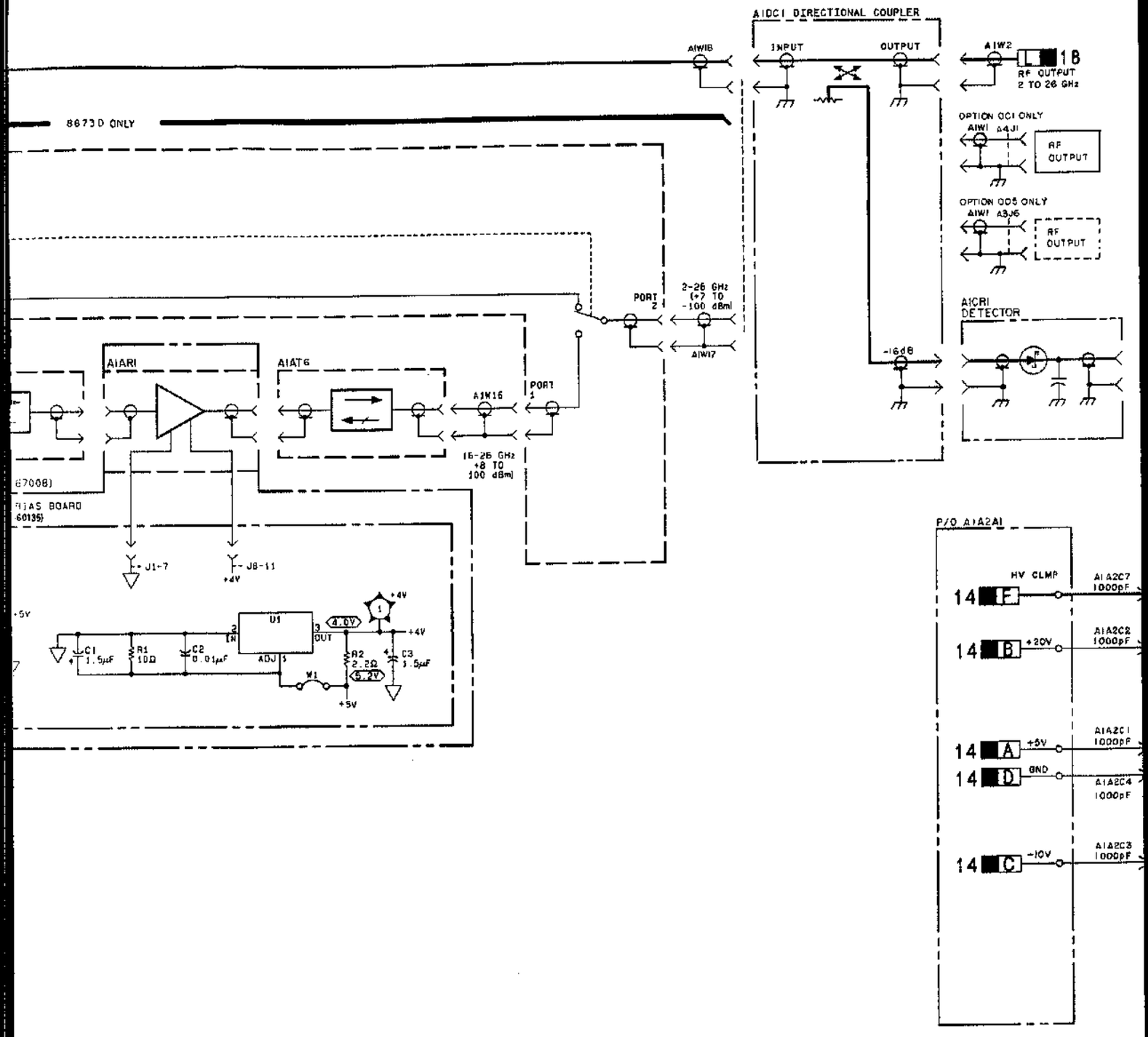


www.valuetronics.com

FIG. 8-239
Sht 4 of 5

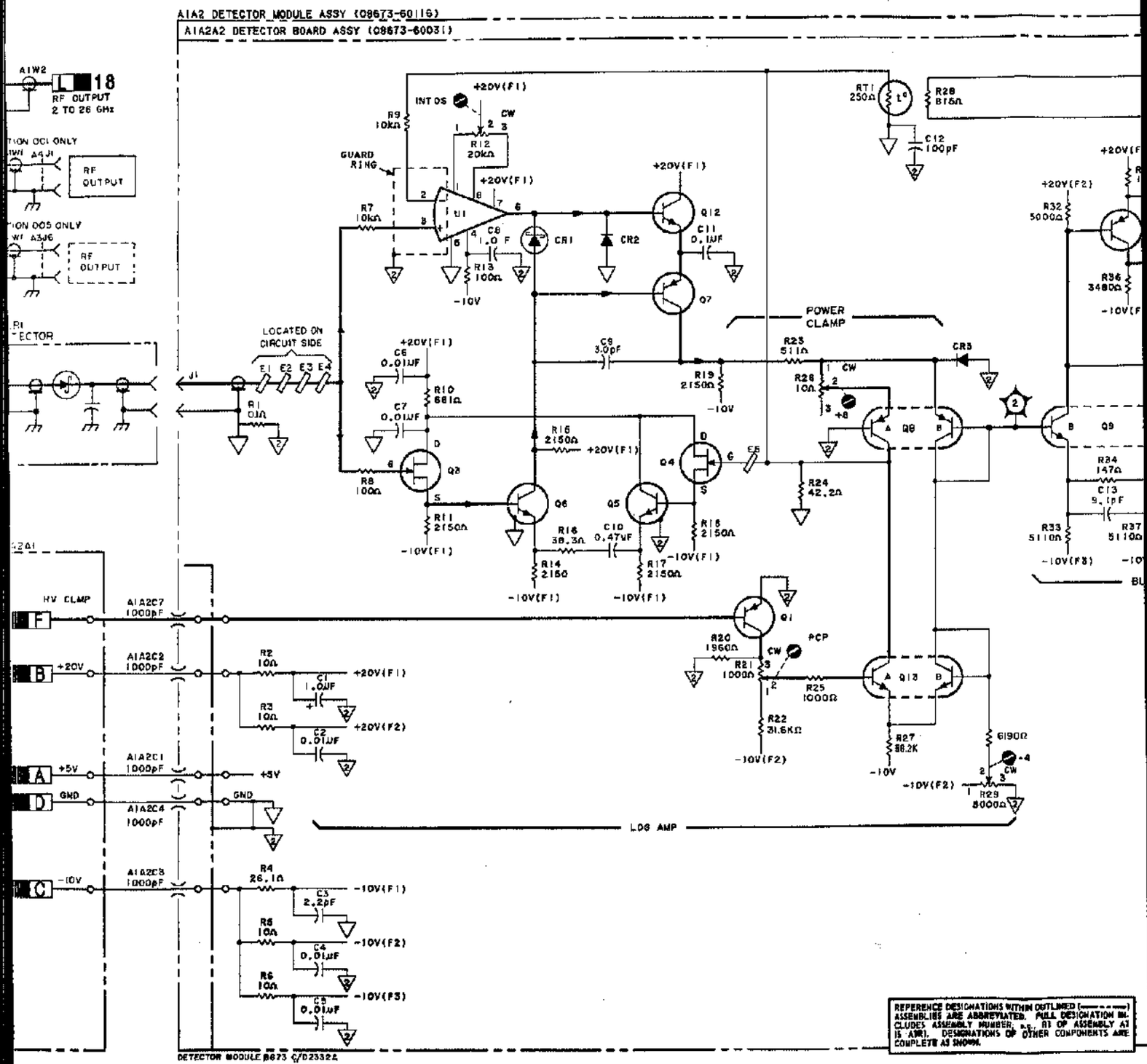


www.valuetronics.com

FIG. 8-239
SHT 5 of 5

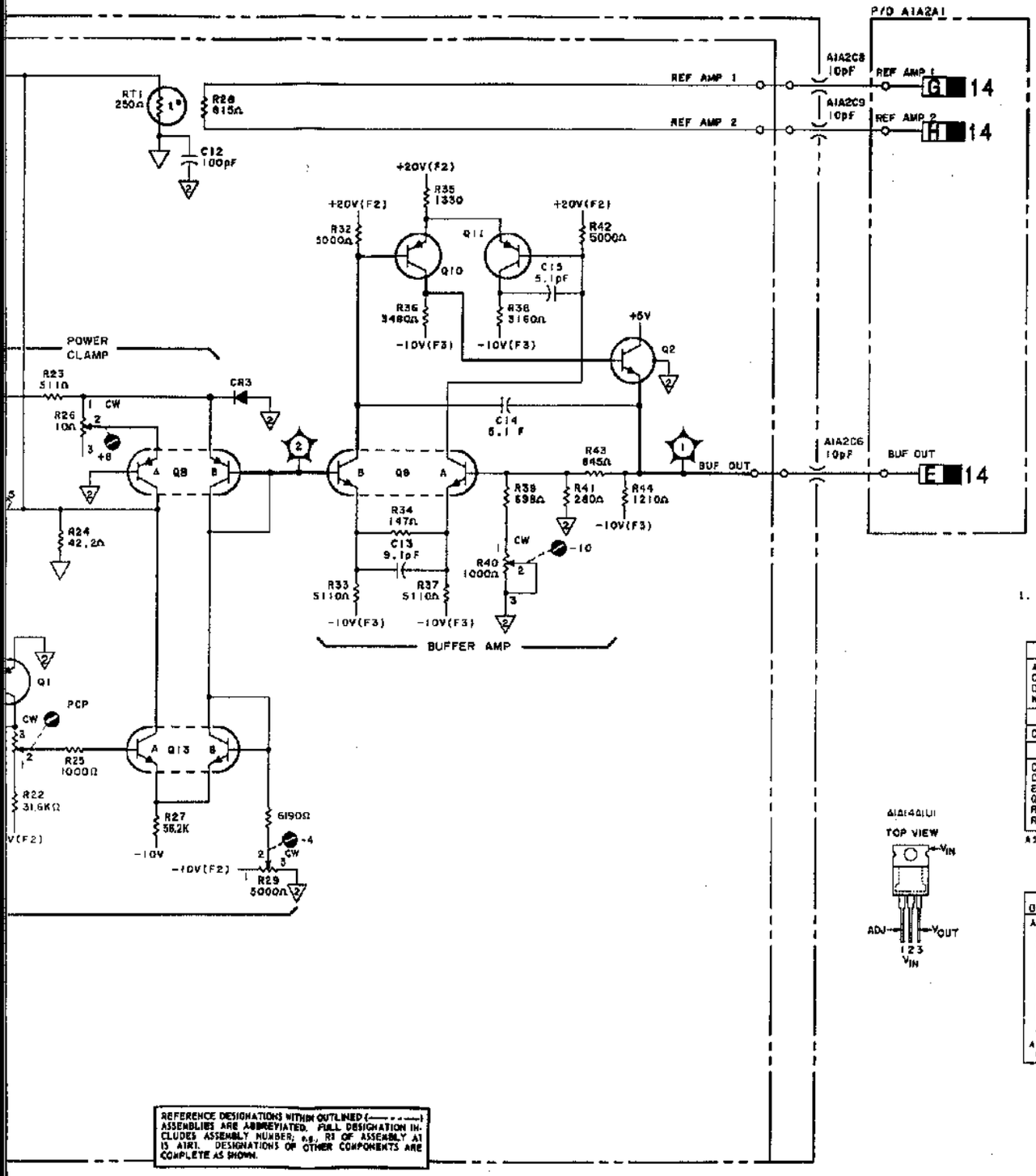


NOTES
1. REFER TO TABLE 8-1 FOR SCHEMATIC DIAGRAM NOTES.

REFERENCE DESIGNATIONS

| A1 | A1A2A2 CONT |
|---|---|
| AT5, 6 | TP1, 2 |
| CR1 | U1 |
| DC1 | |
| W2, 3, 15, 16 | A1A12 |
| A1A2 | J12, 13 |
| C1-4, 8-9 | A1A14 |
| A1A2A2 | AR1 |
| | A1A14A1 |
| C1-15 | C1-3 |
| CR1-3 | J1-11 |
| E1-5 | P1, 2 |
| Q1-13 | TP1 |
| R1-30, 32-44 | U1 |
| RT1 | |

A1A2C5 NOT ASSIGNED

A1A14A1U1
TOP VIEW
$V_{IN}$
ADJ
$V_{OUT}$
1 2 3
$V_{IN}$

TRANSISTOR AND INTEGRATED CIRCUIT PART NUMBERS

| REFERENCE DESIGNATION | PART NUMBER |
|---|---|
| A1A2A2 | |
| Q1 | 1853-0459 |
| Q2, 5, 6 | 1854-0345 |
| Q3, 4 | 1855-0268 |
| Q7 | 1853-0405 |
| Q8 | 1852-0075 |
| Q9 | 1854-0475 |
| Q10, 11 | 1853-0451 |
| Q12 | 1854-0810 |
| Q13 | 1854-0295 |
| U1 | 1826-0471 |
| A1A14A1 | |
| U1 | 1826-0527 |

REFERENCE DESIGNATIONS WITHIN OUTLINED (—— - - ——) ASSEMBLIES ARE ABBREVIATED. FULL DESIGNATION INCLUDES ASSEMBLY NUMBER; e.g., R1 OF ASSEMBLY A1 IS A1R1. DESIGNATIONS OF OTHER COMPONENTS ARE COMPLETE AS SHOWN.

**17**

**P/O A1A2, P/O A1A2A1, A1A2A2, A1CR1, A1DC1**

**Figure 8-239. P/O RF Filter, RF Amplifier, and Detector Amplifier Circuits**



www.valuetronics.com

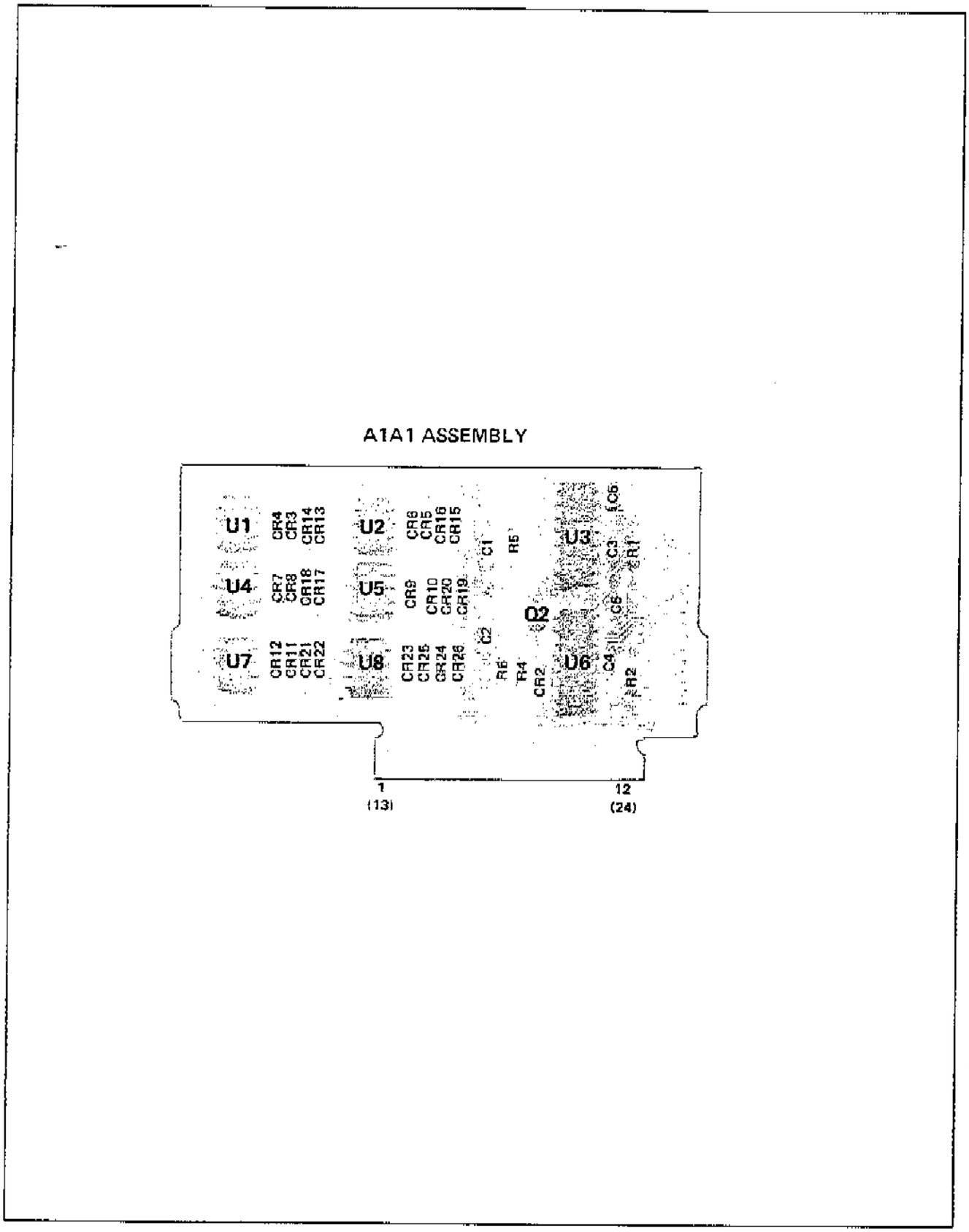


Figure 8-240. A1A1 Attenuator Driver Board Assembly Component and Test Point Location



www.valuetronics.com

FIG. 8-241
Sht 1 of 2

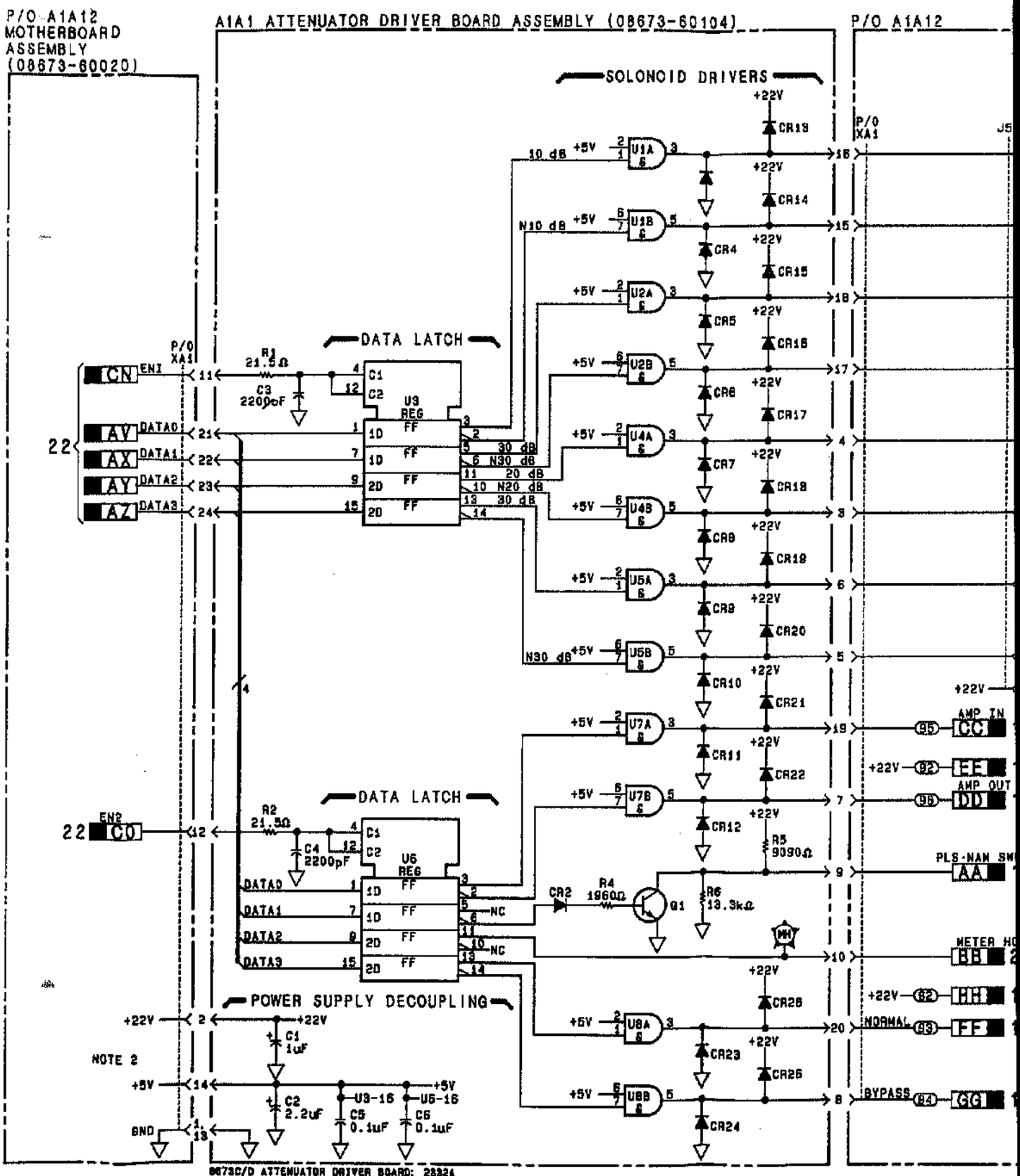


www.valuetronics.com

FIG. 8-241
Sht 2 of 2

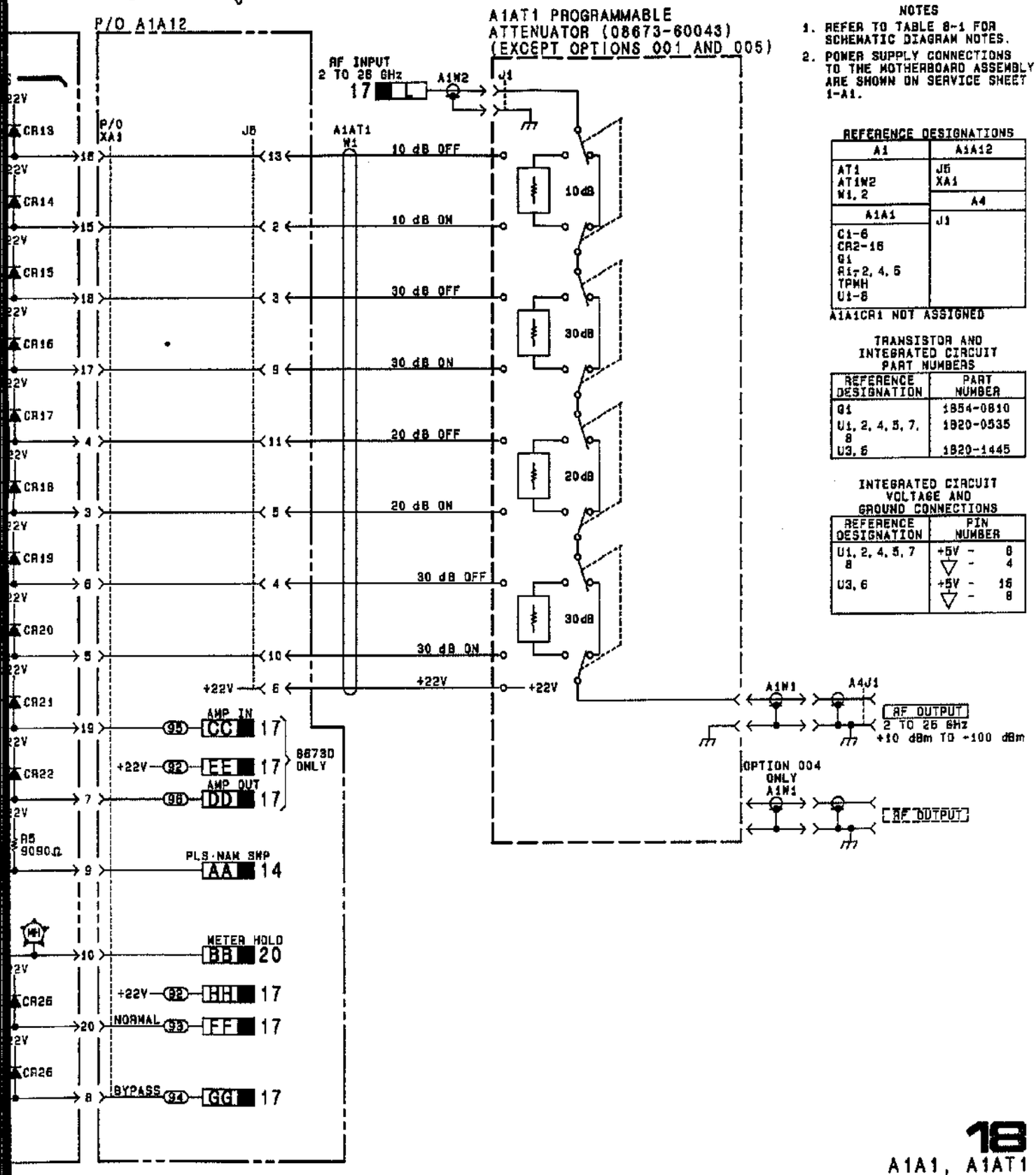


NOTES

1. REFER TO TABLE 8-1 FOR SCHEMATIC DIAGRAM NOTES.
2. POWER SUPPLY CONNECTIONS TO THE MOTHERBOARD ASSEMBLY ARE SHOWN ON SERVICE SHEET 1-A1.

REFERENCE DESIGNATIONS

| A1 | A1A12 |
|---|---|
| AT1<br>AT1W2<br>W1, 2 | J6<br>XA1 |
| **A1A1** | **A4** |
| C1-6<br>CR2-16<br>Q1<br>R1-2, 4, 5<br>TPMH<br>U1-6 | J1 |

A1A1CR1 NOT ASSIGNED

TRANSISTOR AND INTEGRATED CIRCUIT PART NUMBERS

| REFERENCE DESIGNATION | PART NUMBER |
|---|---|
| Q1 | 1854-0810 |
| U1, 2, 4, 5, 7, 8 | 1820-0535 |
| U3, 6 | 1820-1445 |

INTEGRATED CIRCUIT VOLTAGE AND GROUND CONNECTIONS

| REFERENCE DESIGNATION | PIN NUMBER |
|---|---|
| U1, 2, 4, 5, 7, 8 | +5V - 8<br>▽ - 4 |
| U3, 6 | +5V - 16<br>▽ - 8 |

18
A1A1, A1AT1

**Figure 8-241.** Attenuator Driver Assembly Schematic Diagram



www.valuetronics.com

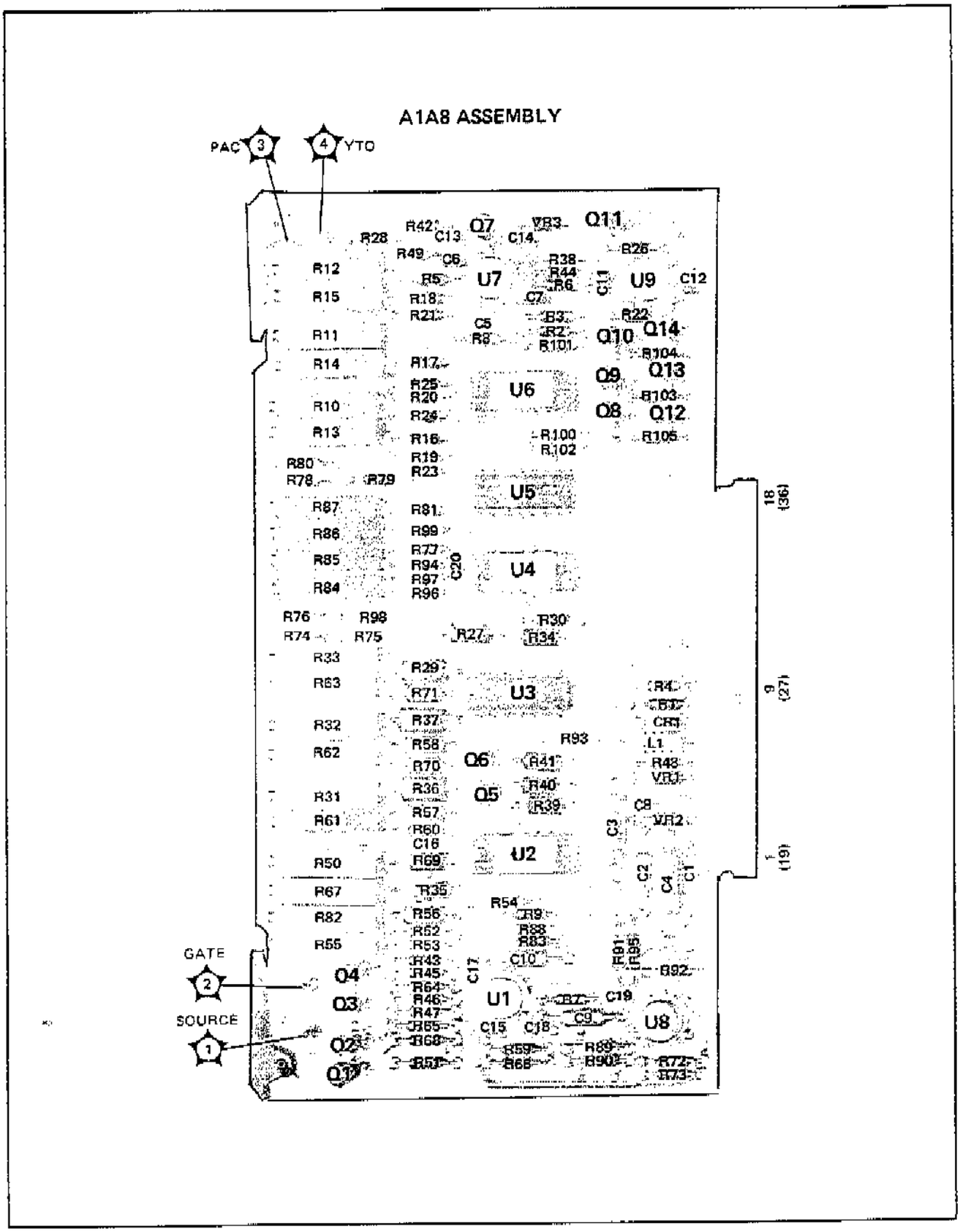


Figure 8-242. A1A8 SRD Bias Board Assembly Component and Test Point Location

8-241a

www.valuetronics.com

FIG. 8-243
Sht 1 of 3

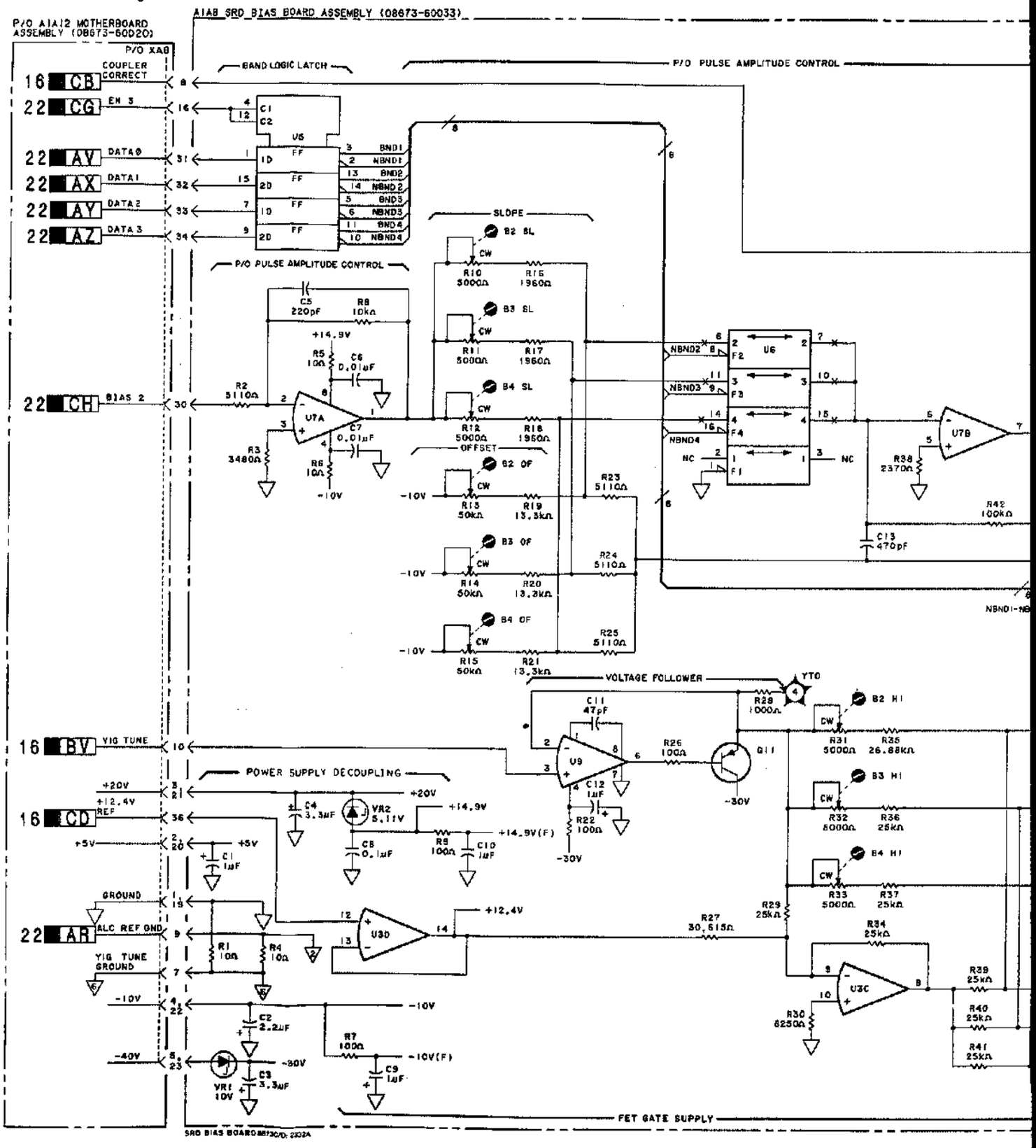


www.valuetronics.com

FIG. 8-243
Sht 2 of 3

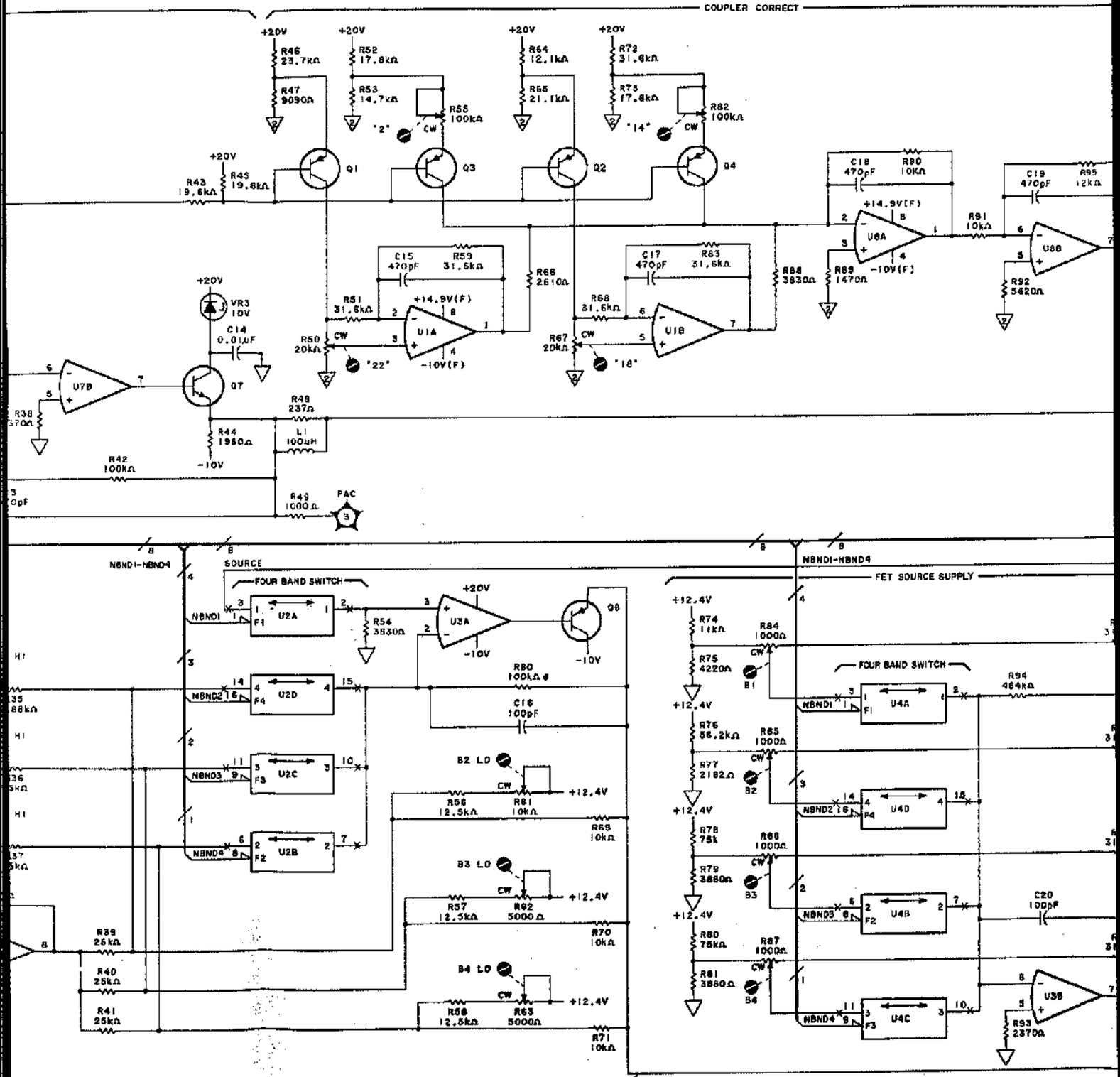


www.valuetronics.com

FIG. 8-243
Sht 3 of 3

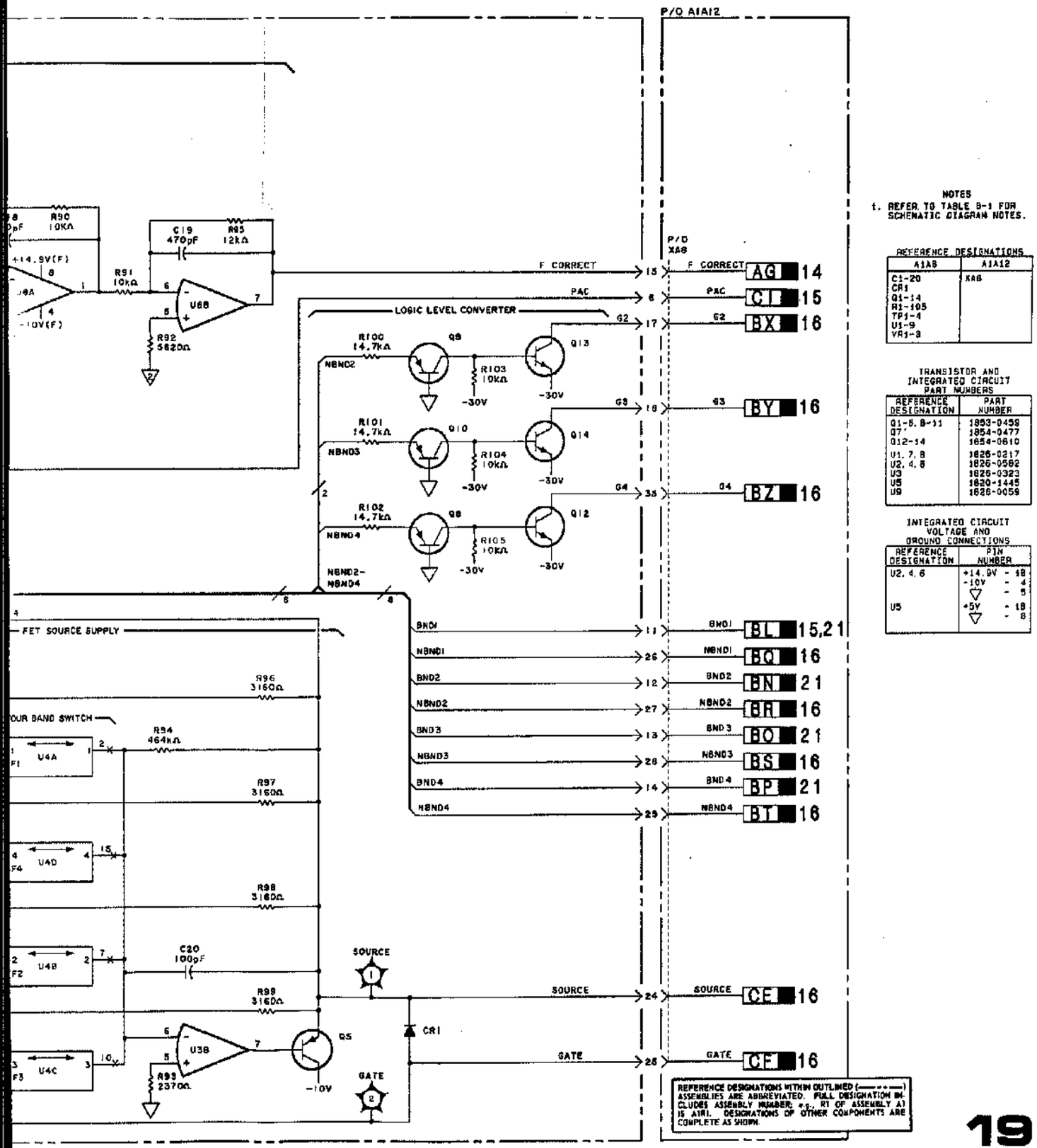


NOTES

1. REFER TO TABLE 8-1 FOR SCHEMATIC DIAGRAM NOTES.

REFERENCE DESIGNATIONS

| A1A8 | A1A12 |
|---|---|
| C1-20<br>CR1<br>Q1-14<br>R1-105<br>TP1-4<br>U1-9<br>VR1-3 | XA8 |

TRANSISTOR AND INTEGRATED CIRCUIT PART NUMBERS

| REFERENCE DESIGNATION | PART NUMBER |
|---|---|
| Q1-5, 8-11 | 1853-0459 |
| Q7 | 1854-0477 |
| Q12-14 | 1854-0610 |
| U1, 7, 8 | 1826-0217 |
| U2, 4, 6 | 1826-0582 |
| U3 | 1826-0323 |
| U5 | 1820-1445 |
| U9 | 1826-0059 |

INTEGRATED CIRCUIT VOLTAGE AND GROUND CONNECTIONS

| REFERENCE DESIGNATION | PIN NUMBER |
|---|---|
| U2, 4, 6 | +14.9V - 18<br>-10V - 4<br>▽ - 5 |
| U5 | +5V - 18<br>▽ - 8 |

REFERENCE DESIGNATIONS WITHIN OUTLINED (— · · · —) ASSEMBLIES ARE ABBREVIATED. FULL DESIGNATION INCLUDES ASSEMBLY NUMBER; e.g., R1 OF ASSEMBLY A1 IS A1R1. DESIGNATIONS OF OTHER COMPONENTS ARE COMPLETE AS SHOWN.

19
A1A8

Figure 8-243. SRD Control Assembly Schematic Diagram



www.valuetronics.com

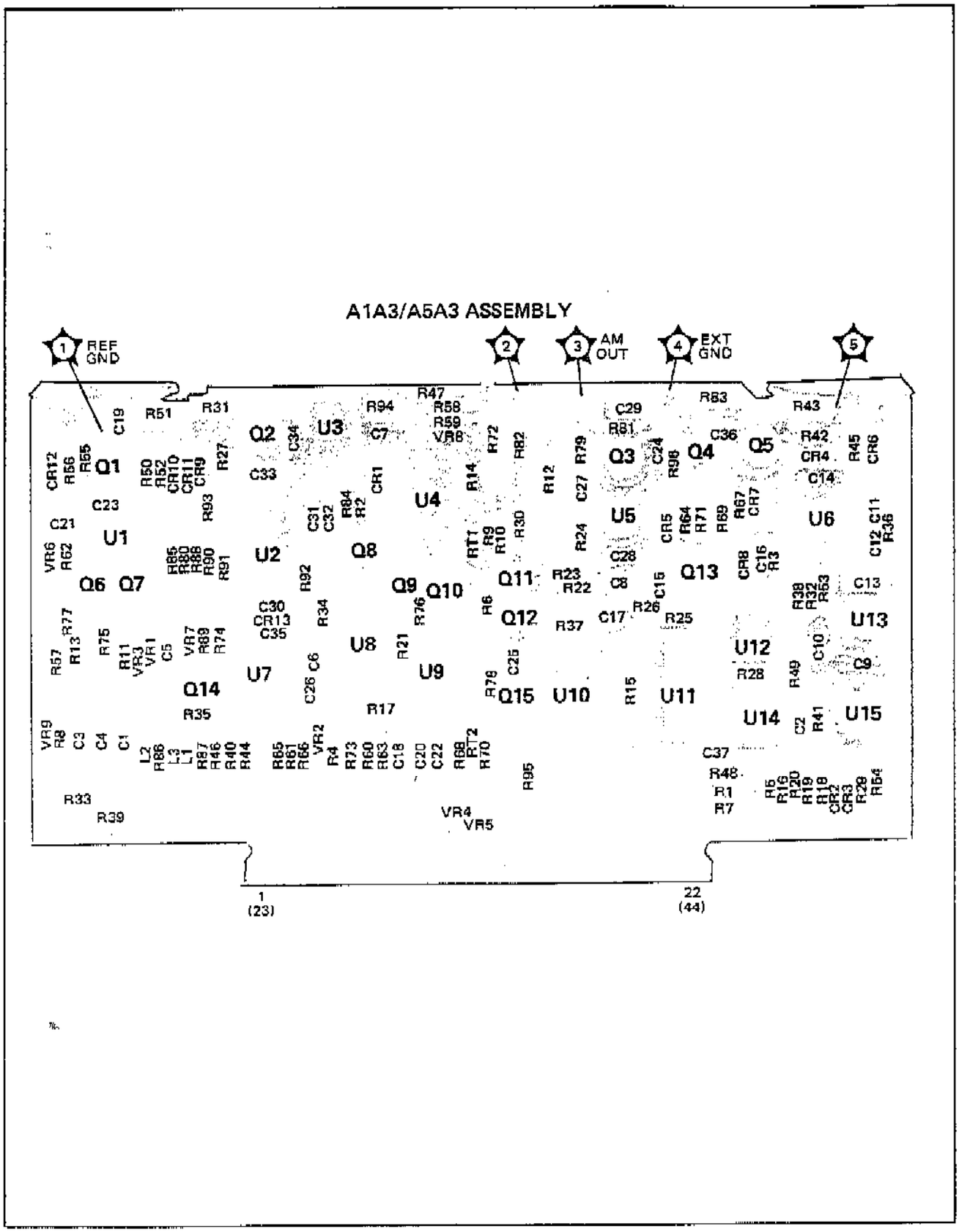


Figure 8-244. A1A3 Function Board Assembly Component and Test Point Location

8-243a

www.valuetronics.com

FIG. 8-245
Sht 1 of 4

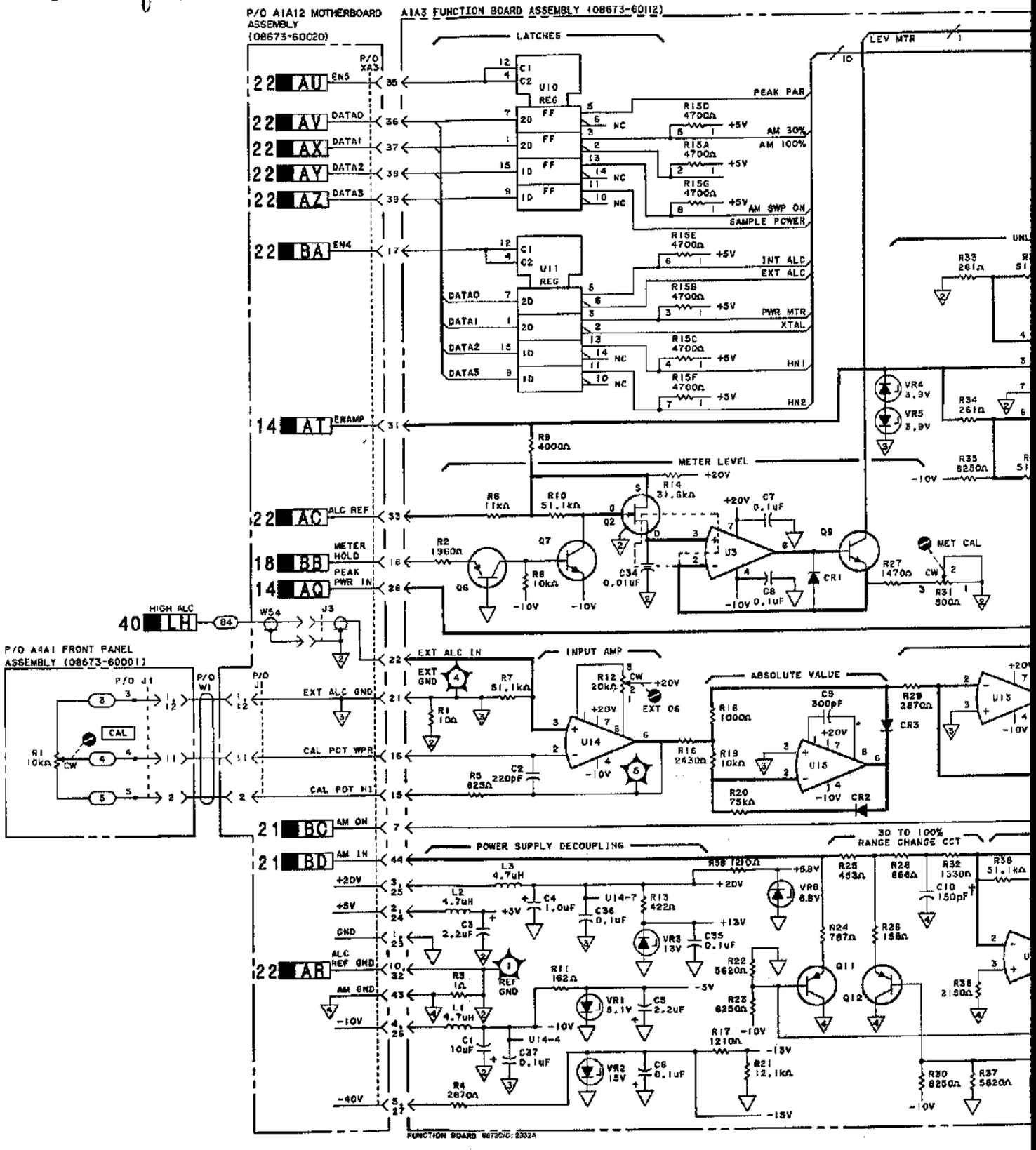


www.valuetronics.com

FIG. 8-245
Sht 2 of 4

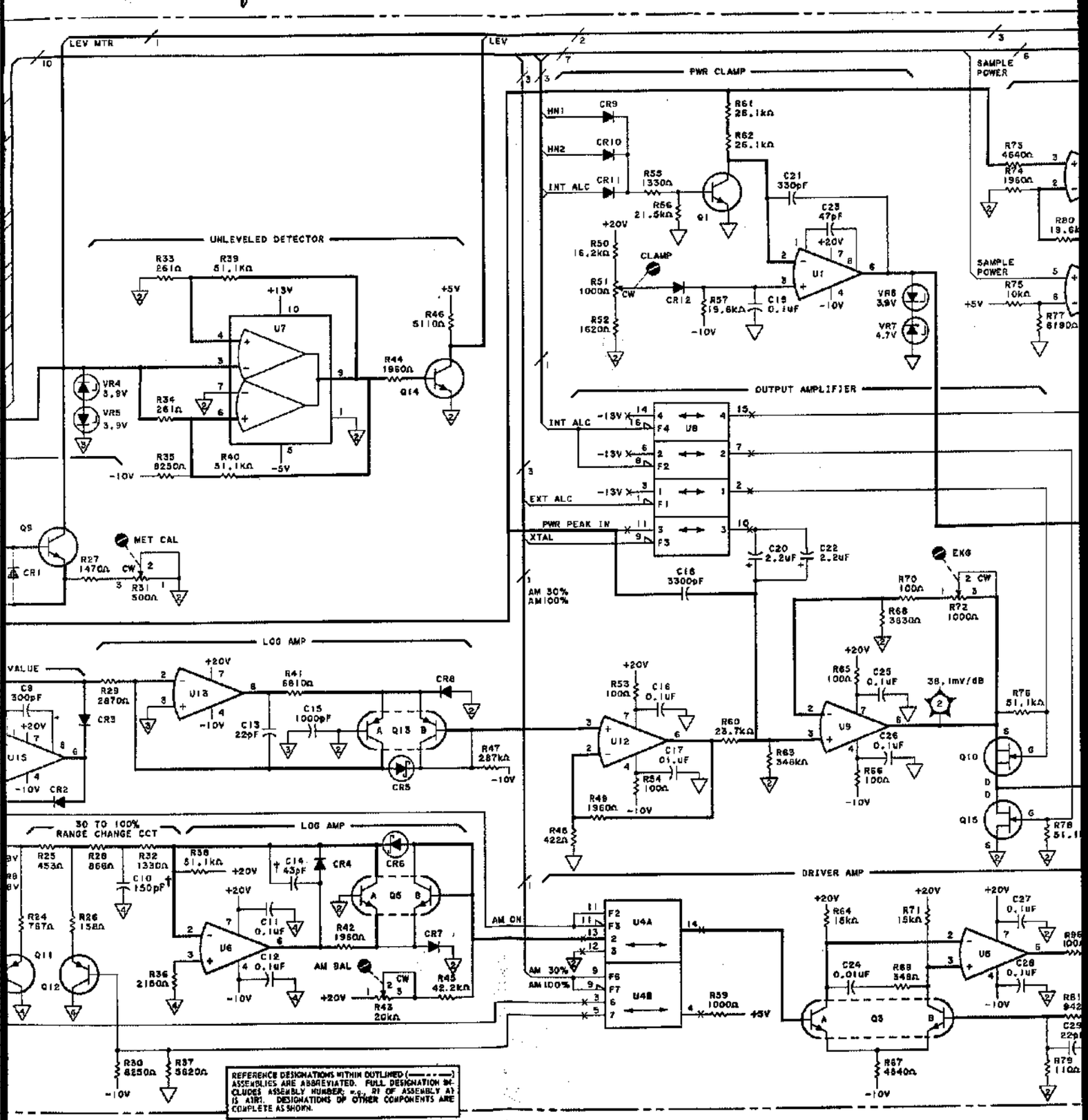


www.valuetronics.com

FIG. 8-245
Sht 3 of 4

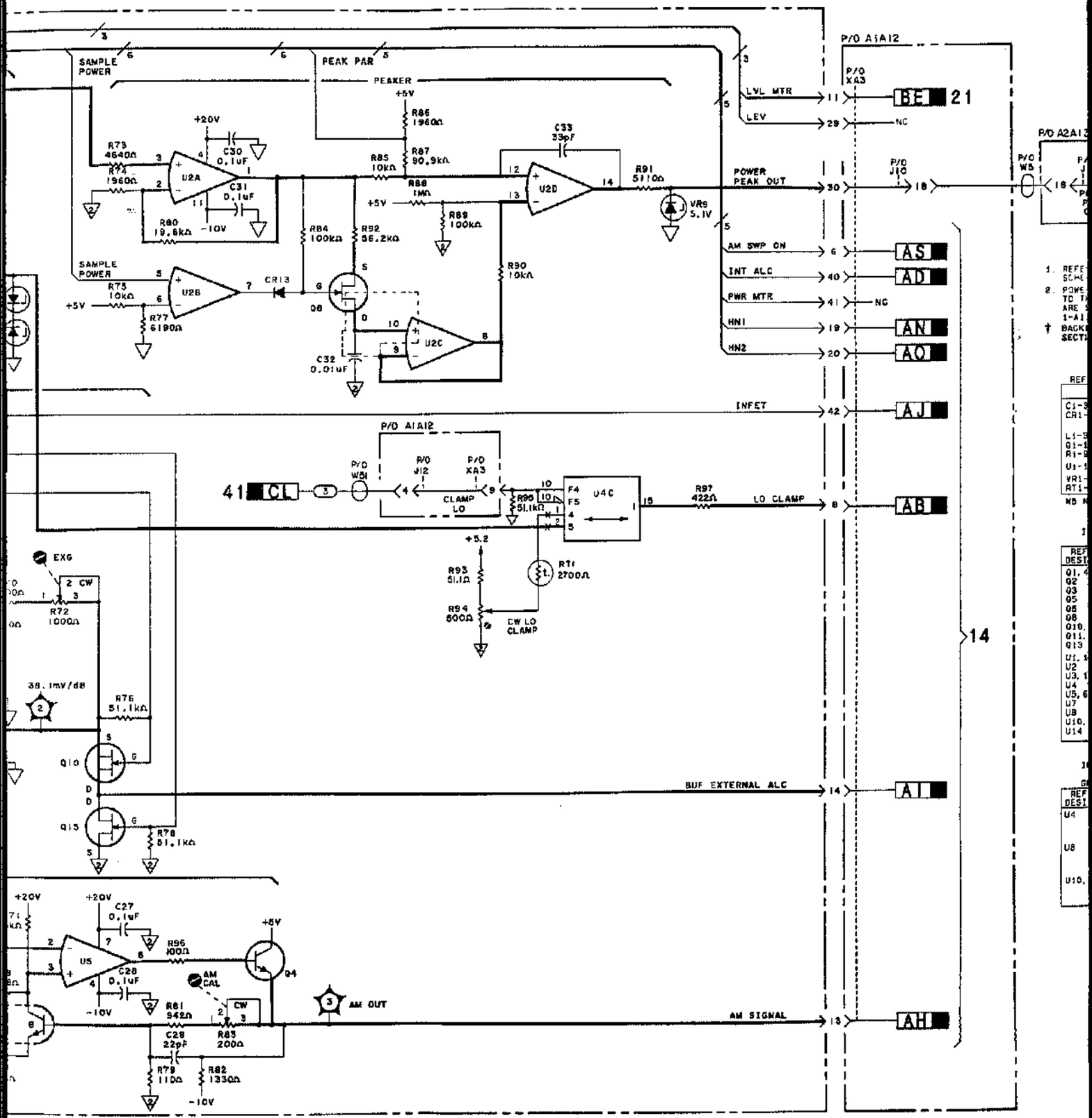


Figure 8-245. Function Board Assembly Sc

www.valuetronics.com

FIG. 8-245
Sht 4 of 4

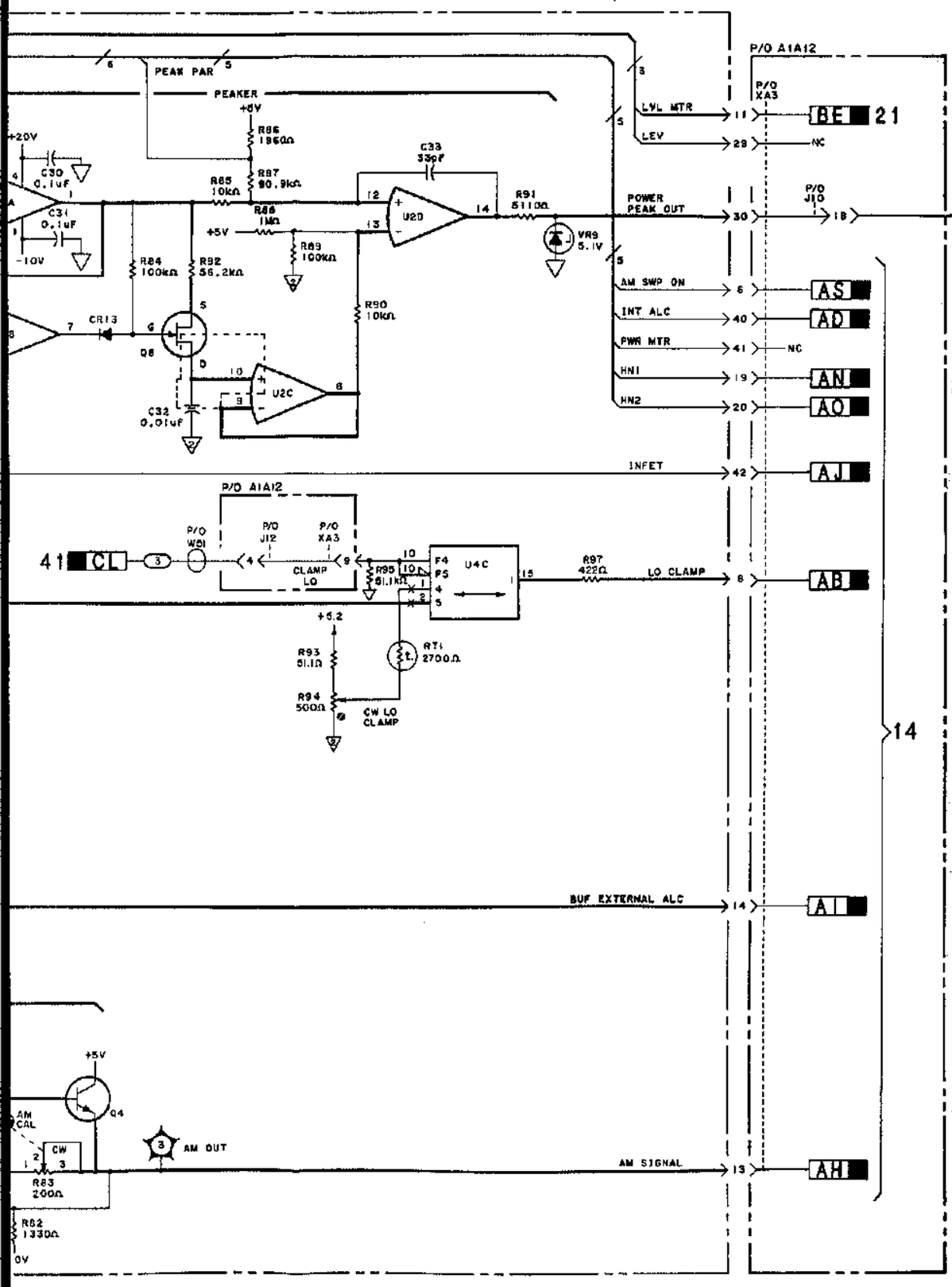


NOTES

1. REFER TO TABLE 8-1 FOR SCHEMATIC DIAGRAM NOTES.
2. POWER SUPPLY CONNECTIONS TO THE MOTHERBOARD ASSEMBLY ARE SHOWN ON SERVICE SHEET 1-A1.

† BACKDATING INFORMATION IN SECTION VII.

REFERENCE DESIGNATIONS

| A1A3 | A1A12 |
|---|---|
| C1-37<br>CR1-13 | XA3<br>J10, 12 |
| | A4A1 |
| L1-3<br>Q1-15<br>R1-95 | J3<br>W2 |
| | A2A13 |
| U1-15<br>VR1-8<br>RT1-2 | J5 |

W5 NOT ASSIGNED

TRANSISTOR AND INTEGRATED CIRCUIT PART NUMBERS

| REFERENCE DESIGNATION | PART NUMBER |
|---|---|
| Q1, 4, 7, 9, 14 | 1854-0810 |
| Q2 | 1855-0327 |
| Q3 | 1854-0830 |
| Q5 | 1854-0475 |
| Q6 | 1853-0458 |
| Q8 | 1855-0414 |
| Q10, 15 | 1855-0253 |
| Q11, 12 | 1853-0322 |
| Q13 | 1853-0316 |
| U1, 15 | 1826-0059 |
| U2 | 1826-0800 |
| U3, 12 | 1826-0520 |
| U4 | 1826-0501 |
| U5, 6, 9, 13 | 1826-0413 |
| U7 | 1820-0125 |
| U8 | 1826-0582 |
| U10, 11 | 1820-1445 |
| U14 | 1826-0471 |

INTEGRATED CIRCUIT VOLTAGE AND GROUND CONNECTIONS

| REFERENCE DESIGNATION | PIN NUMBER |
|---|---|
| U4 | +6.8V - 16<br>-5V - 7<br>▽ - 6, 8 |
| U8 | +13V - 13<br>-15V - 4<br>▽ - 5 |
| U10, 11 | +5V - 16<br>▽ - 8 |

**20**
**A1A3, P/O A4A1**

**Figure 8-245. Function Board Assembly Schematic Diagram**



www.valuetronics.com

Service Shts 21-30

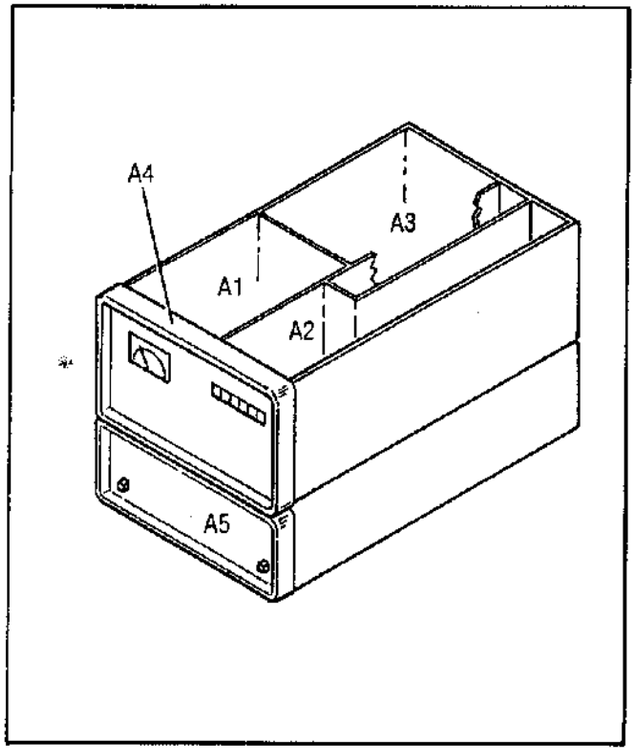


Major Assemblies

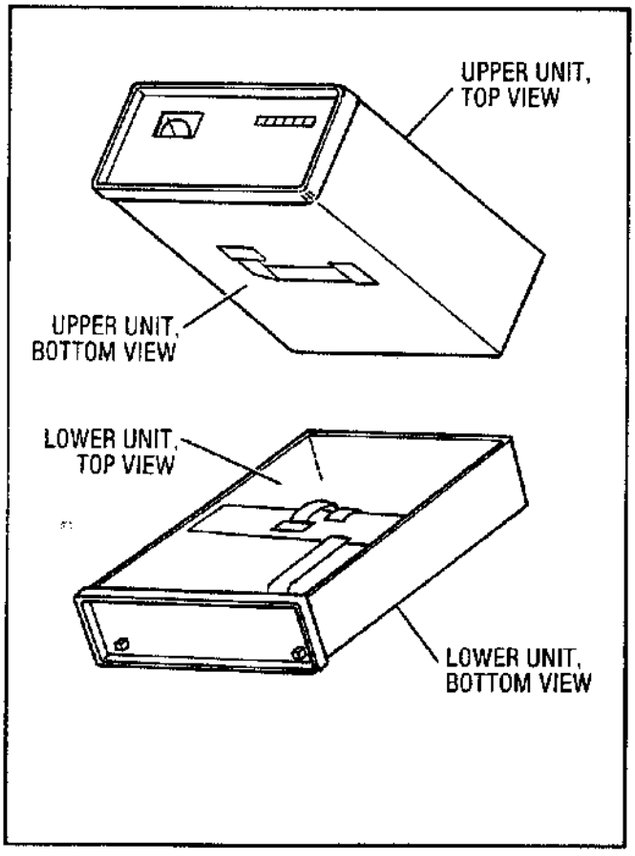


Internal View Identification

## Assemblies vs. Service Sheet List

| Assembly | Description | Ser.Sheet |
|---|---|---|
| A1A1 | Attenuator Driver Board Assembly | 18 |
| A1A2 | Detector Module Assembly | 14,17 |
| A1A2A1 | ALC Board Assembly | 14,17 |
| A1A2A2 | Detector Board Assembly | 17 |
| A1A3 | Function Board Assembly | 20 |
| A1A4 | Pulse Driver Board Assembly | 15 |
| A1A5 | DAC and Enable Board Assembly | 22 |
| A1A6 | Meter Board Assembly | 20,40 |
| A1A7 | YTM Driver Board Assembly | 16 |
| A1A8 | SRD Bias Board Assembly | 19 |
| A1A9 | Preamp Assembly | 14,16 |
| A1A10 | YTM Assembly | 16 |
| A1A10A1 | YIG Heater Control Assembly | 16 |
| A1A11 | Power Amplifier Assembly | 16 |
| A1A12 | Motherboard Assembly | 14-16,18-22, 30,31,40 |
| A1A13 | Terminal Strip | 37 |
| A1A14 | Amp Bias Board Assembly | 17 |
| A2A1 | Panel Driver Board Assembly | 25 |
| A2A2 | Key Code Board Assembly | 24 |
| A2A3 | VCO Assembly | 8 |
| A2A4 | Phase Detector Assembly | 7 |
| A2A5 | Divider Assembly 20/30 | 6 |
| A2A6 | Not Assigned | |
| A2A7 | I/O Board Assembly | 30,31 |
| A2A8 | Microprocessor Board Assembly | 26 |
| A2A9 | Frequency/HP-IB Board Assembly | 29 |
| A2A10 | RAM Board Assembly | 28 |
| A2A11 | ROM Board Assembly | 27 |
| A2A13 | Motherboard Assembly | 6-8,10, 20-32 |
| A2A14 | Rear Interconnect Board Assembly | 24,29, 31 |
| A2A15 | HP-IB Connector Board Assembly | 29 |
| A3A1 | Rectifier Assembly | 33 |
| A3A1A1 | Reference Phase Detector Assembly | 1,2 |
| A3A1A2 | 100 MHz VCXO Assembly | 2 |
| A3A1A3 | M/N Phase Detector Assembly | 3 |
| A3A1A4 | M/N VCO Assembly | 4 |
| A3A1A4A1 | VCO Resonator | 4 |
| A3A1A4A2 | VCO Board Assembly | 4 |
| A3A1A5 | M/N Output Assembly | 5 |
| A3A1A6 | M/N Reference Motherboard Assembly | 1-3,5 |
| A3A1A7 | Reference Housing Assembly | |
| A3A2 | Not Assigned | |
| A3A3 | Positive Regulator Assembly | 34 |
| A3A4 | Negative Regulator Assembly | 35 |
| A3A5 | DAC Assembly | 9 |
| A3A6 | YTO Driver Assembly | 10 |
| A3A7 | FM Driver Assembly | 13 |
| A3A8 | 10 MHz Reference Oscillator | 1 |
| A3A9 | YTO Loop Assembly | 11,12 |
| A3A9A1 | Directional Coupler Assembly | 13 |
| A3A9A2 | YTO Interconnect Assembly | 11-13 |
| A3A9A3 | 2.0 - 6.6 GHz YTO Assembly | 13 |
| A3A9A4 | YTO Phase Detector Assembly | 12 |
| A3A9A5 | Sampler Assembly | 11 |
| A3A9A6 | Attenuator Assembly | 13 |
| A3A9A7 | 6.2 GHz Low Pass Filter | 13 |
| A3A10 | Motherboard Assembly | 1,3,6,10, 12-14,21-23 26, 29-31, 33-35 |
| A4A1 | Front Panel Board Assembly | 20,22, 23,32,40 |
| A5A1 | Front Panel Board Assembly | 41,42,44 |
| A5A2 | Detector Module Assembly | 36,39 |
| A5A2A1 | ALC Board Assembly | 36,39 |
| A5A2A2 | Detector Board Assembly | 39 |
| A5A3 | Function Board Assembly | 42 |
| A5A4 | Pulse Driver Board Assembly | 37 |
| A5A5 | DAC and Enable Board Assembly | 44 |
| A5A6 | Switch Driver Board Assembly | 36,41 |
| A5A7 | YTM Driver Board Assembly | 38 |
| A5A8 | Motherboard Assembly | 36-38,40-44, 46,47 |
| A5A9 | Microprocessor Board Assembly | 43 |
| A5A10 | Power Supply Board Assembly | 45-47 |
| A5A11 | Regulator 2 Board Assembly | 46 |
| A5A12 | Regulator 1 Board Assembly | 46,47 |
| A5A13 | Pulse Input Assembly | 37 |
| A5A13A1 | Pulse Input Switch Board Assembly | 37 |

www.valuetronics.com

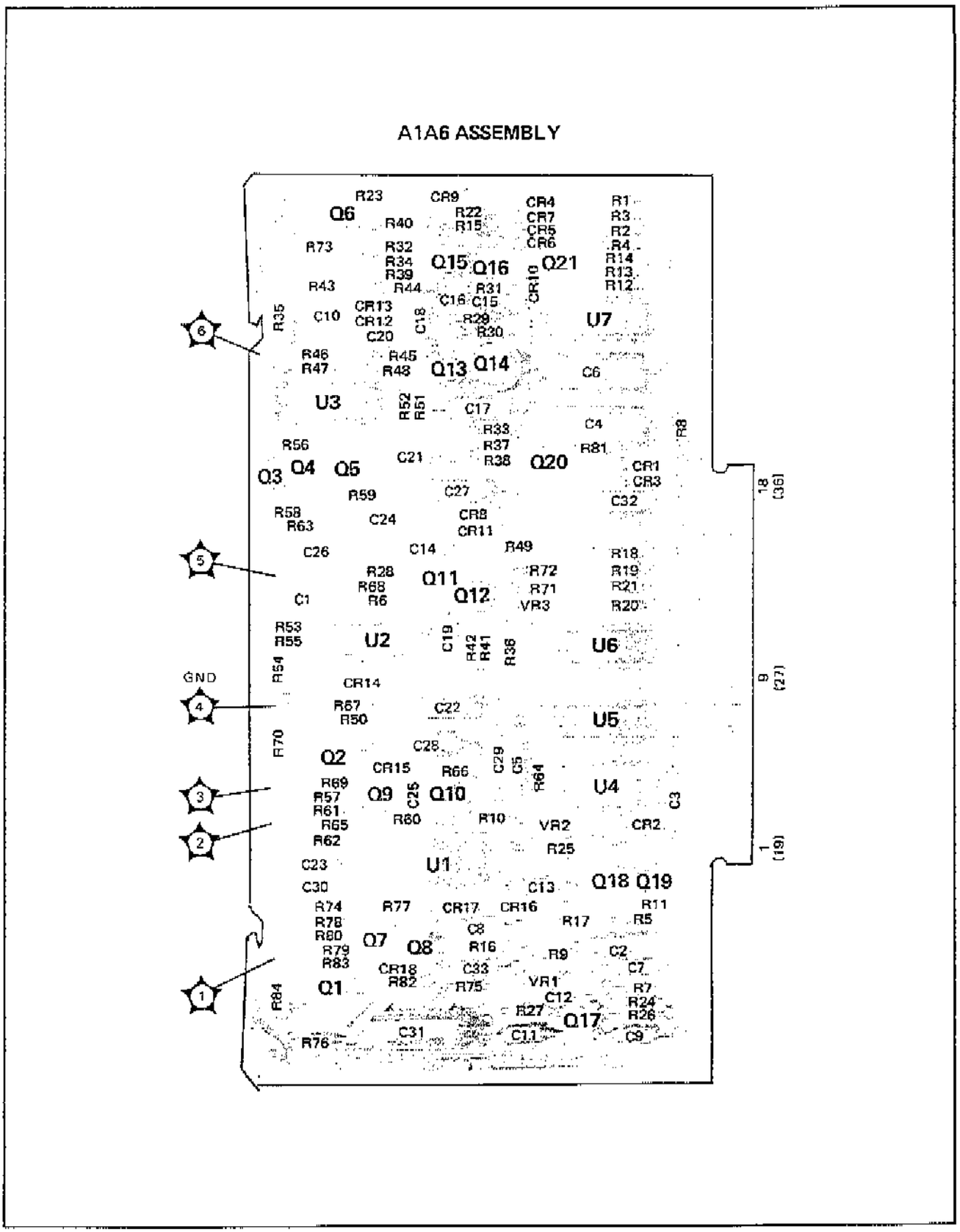


Figure 8-246. A1A6 Meter Board Assembly Component and Test Point Location

8-245a

www.valuetronics.com

FIG. 8-247
Sht 1 of 4

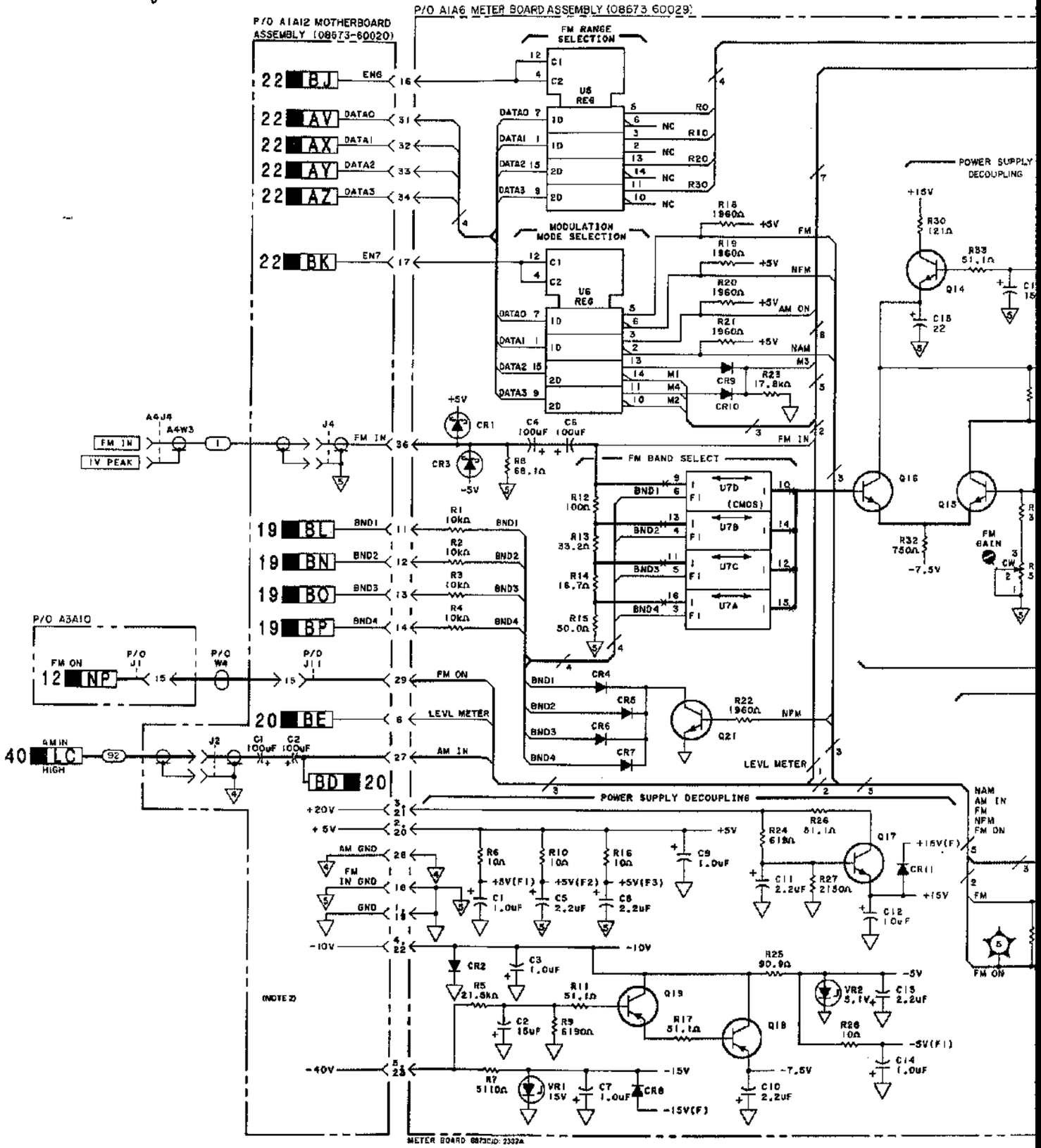


www.valuetronics.com

FIG. 8-247
Sht 2 of 4

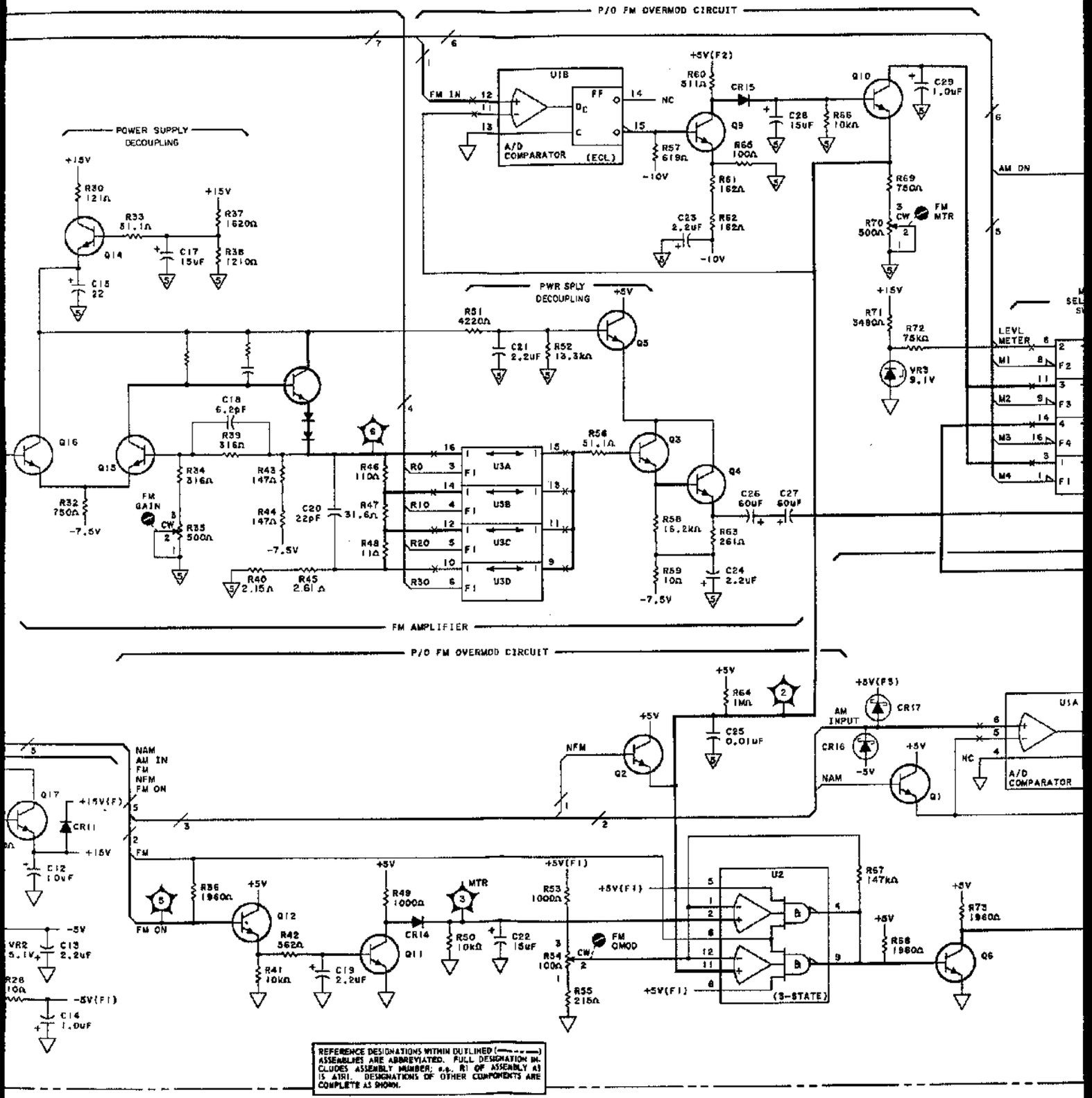


www.valuetronics.com

FIG. 8-247
SHT 3 of 4

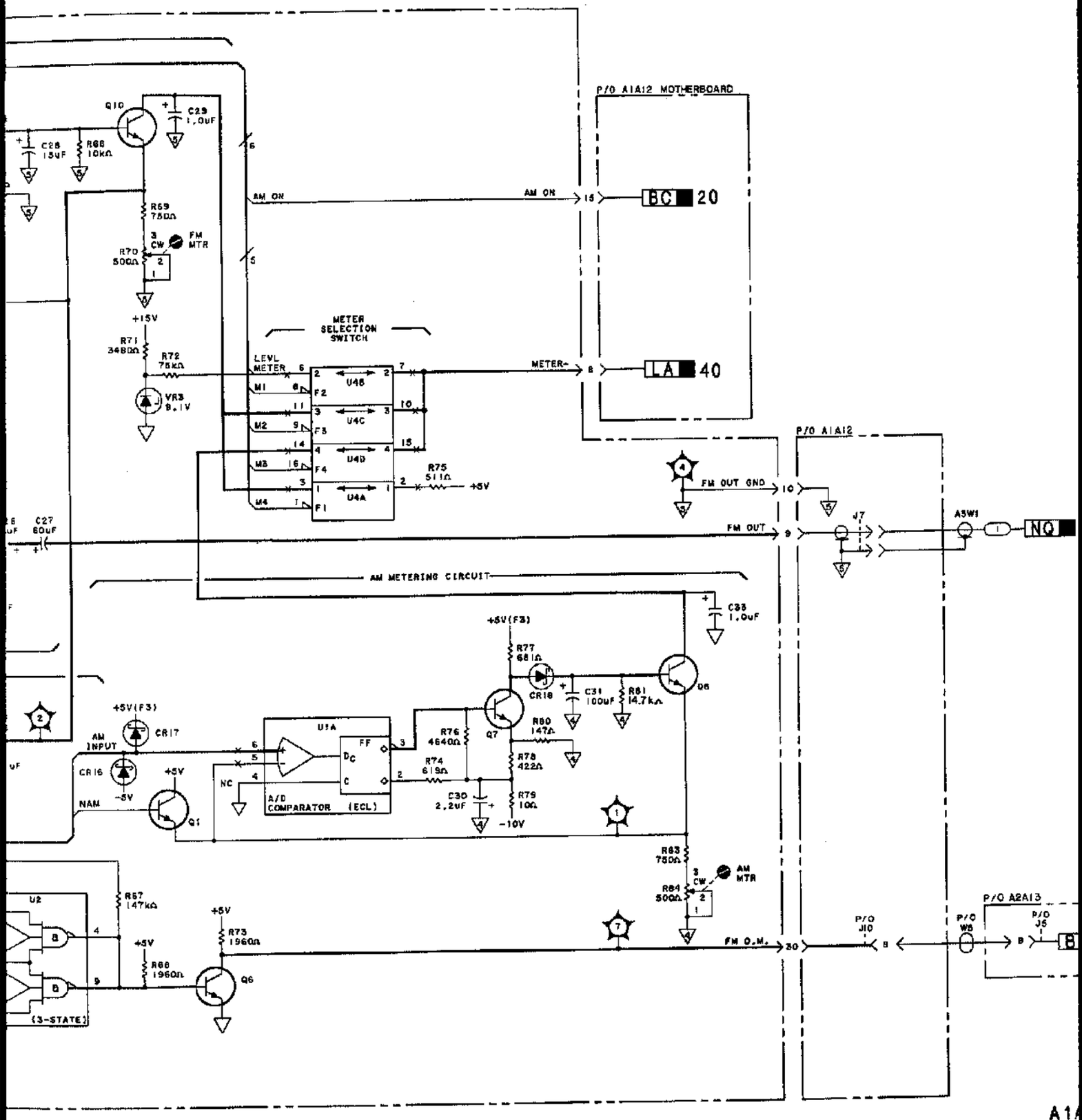


A1A

Figure 8-247. Metering

www.valuetronics.com

FIG. 8-247
Sht 4 of 4

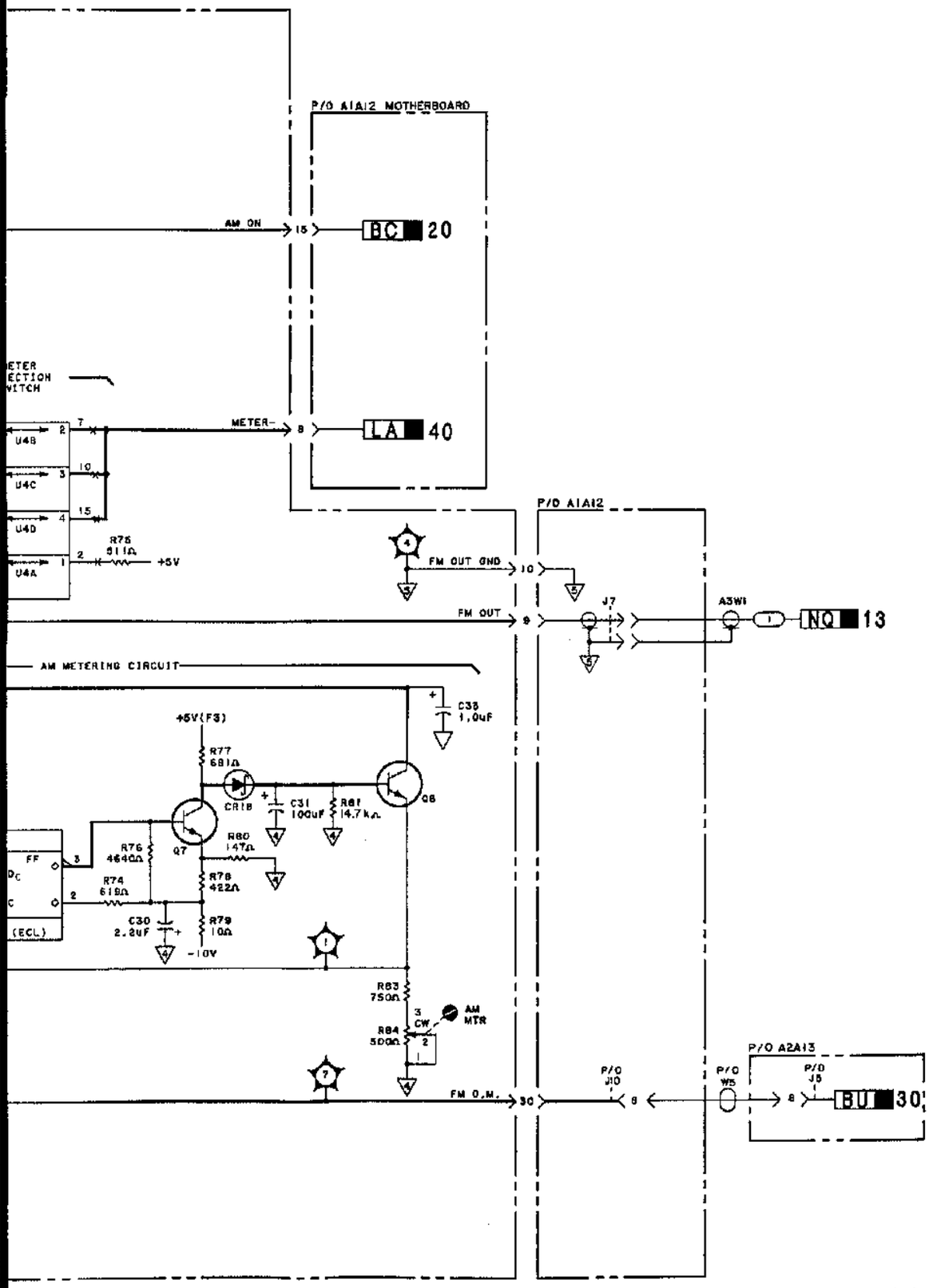


NOTES

1. REFER TO TABLE 8-1 FOR SCHEMATIC DIAGRAM NOTES.
2. POWER SUPPLY CONNECTIONS TO THE MOTHERBOARD ASSEMBLY ARE SHOWN ON SERVICE SHEET 1-A1.

REFERENCE DESIGNATIONS

| A1A6 | A2A13 |
|---|---|
| C1-31,33<br>CR1-18<br>Q1-29,21<br>R1-81,83,84<br>TR1-7<br>VR1-3<br>U1-7 | U5 |
| A1A12 | A3A10 |
| J1, 2, 4, 7, 10, 11, 12<br>N1 | J1 |

TRANSISTOR AND INTEGRATED CIRCUIT PART NUMBERS

| REFERENCE DESIGNATION | PART NUMBER |
|---|---|
| Q1, 2, 5, 6, 9, 10-12, 21 | 1854-0810 |
| Q3, 4, 13, 15, 16 | 1854-0610 |
| Q7, 9 | 1854-0809 |
| Q14 | 1854-0597 |
| Q17 | 1854-0477 |
| Q18 | 1853-0281 |
| Q19 | 1853-0549 |
| U1 | 1820-0919 |
| U2 | 1826-0256 |
| U3 | 1820-1374 |
| U4 | 1826-0582 |
| U5, 6 | 1820-1445 |
| U7 | 1820-1374 |

INTEGRATED CIRCUIT VOLTAGE AND GROUND CONNECTIONS

| REFERENCE DESIGNATION | PIN NUMBER |
|---|---|
| U1 | +5V (F2) - 7, 10<br>-5V - 8<br>▽ - 1, 18 |
| U2 | +5V (F2) - 14<br>-5V (F1) - 14<br>▽ |
| U3, 7 | +15V - 8<br>-15V - 1<br>▽ - 2 |
| U4 | +15V - 13<br>-15V - 4<br>▽ - 5 |
| U5, 6 | -5V (F1) - 16<br>▽ - 8 |

21

A1A6, P/O A4, P/O A4A1, A4M1

Figure 8-247. Metering Control Assembly Schematic Diagram



www.valuetronics.com

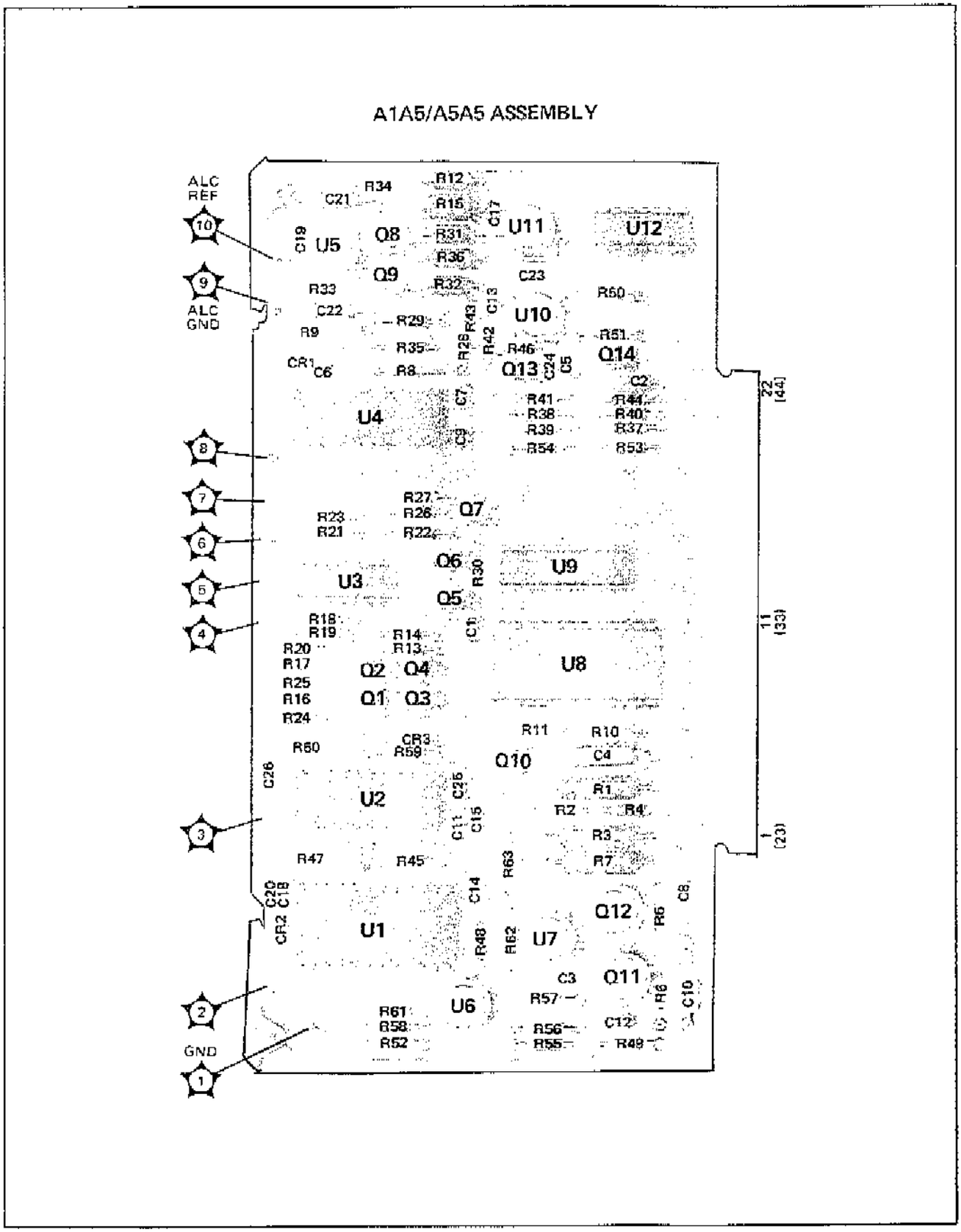


Figure 8-248. A1A5 DAC and Enable Board Assembly Component and Test Point Location



www.valuetronics.com

FIG. 8-249
SHT 1 of 4

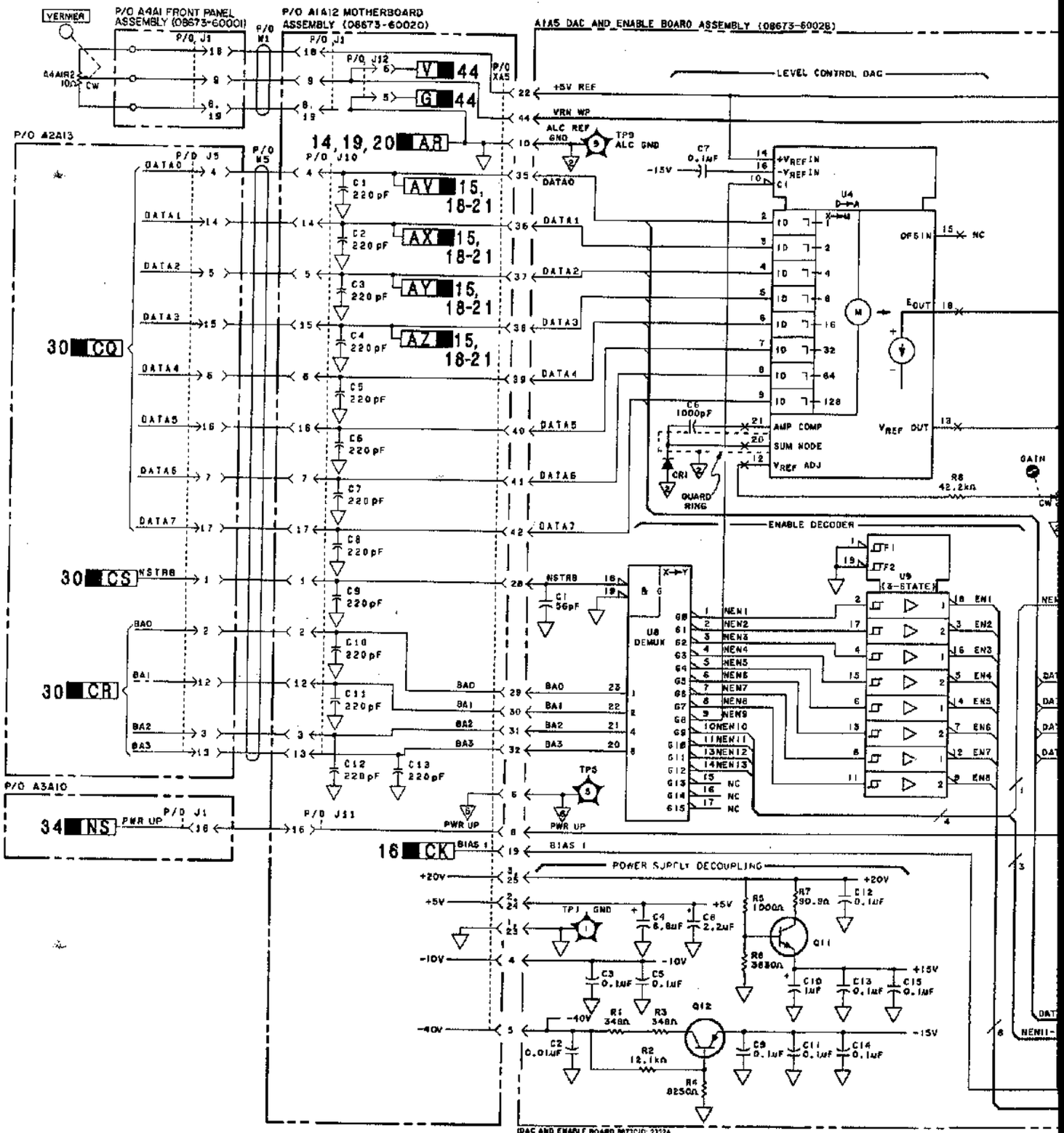


www.valuetronics.com

FIG. 8-249
Sht 2 of 4

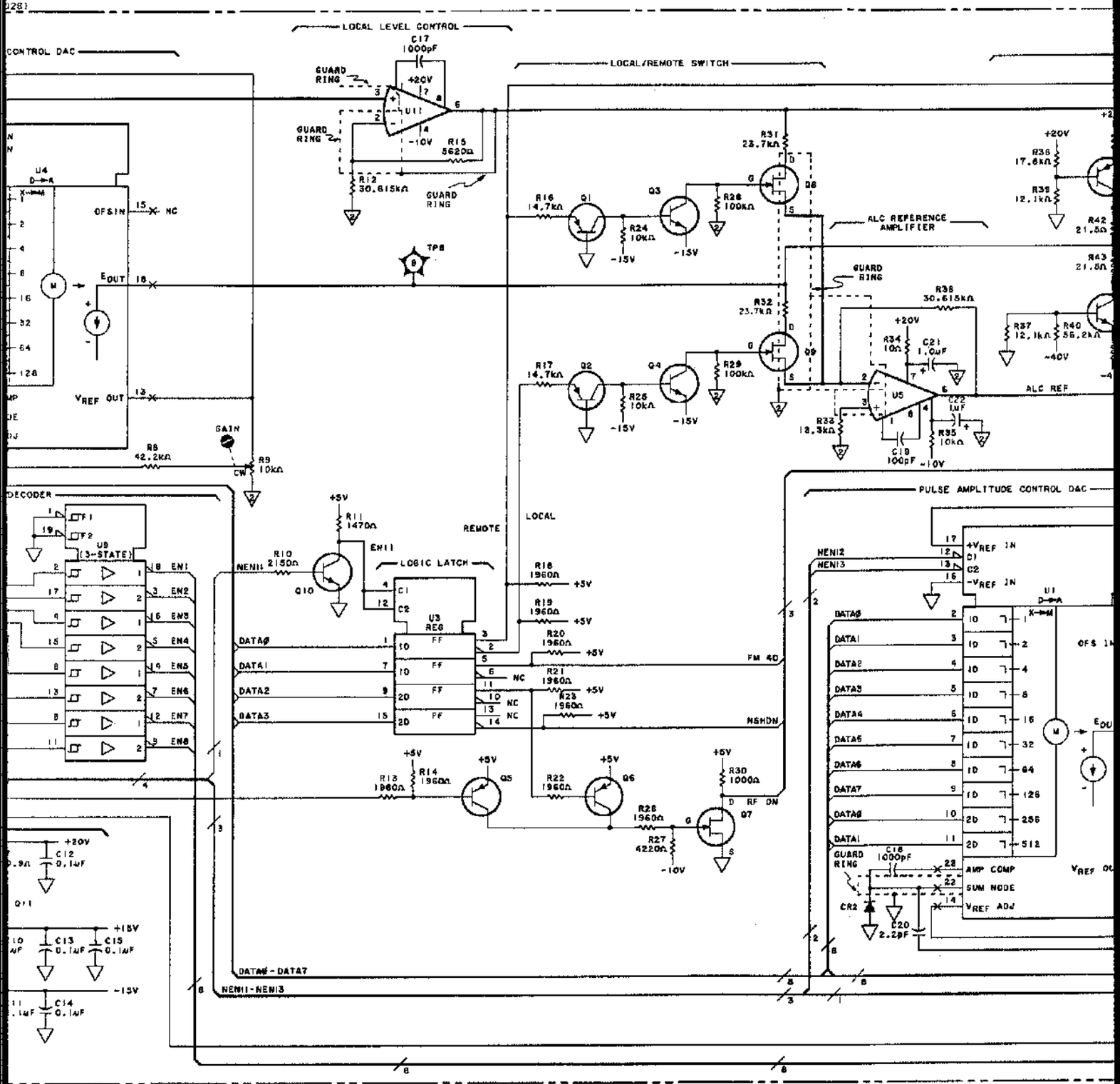


www.valuetronics.com

FIG. 8-249
Sht 3 of 4

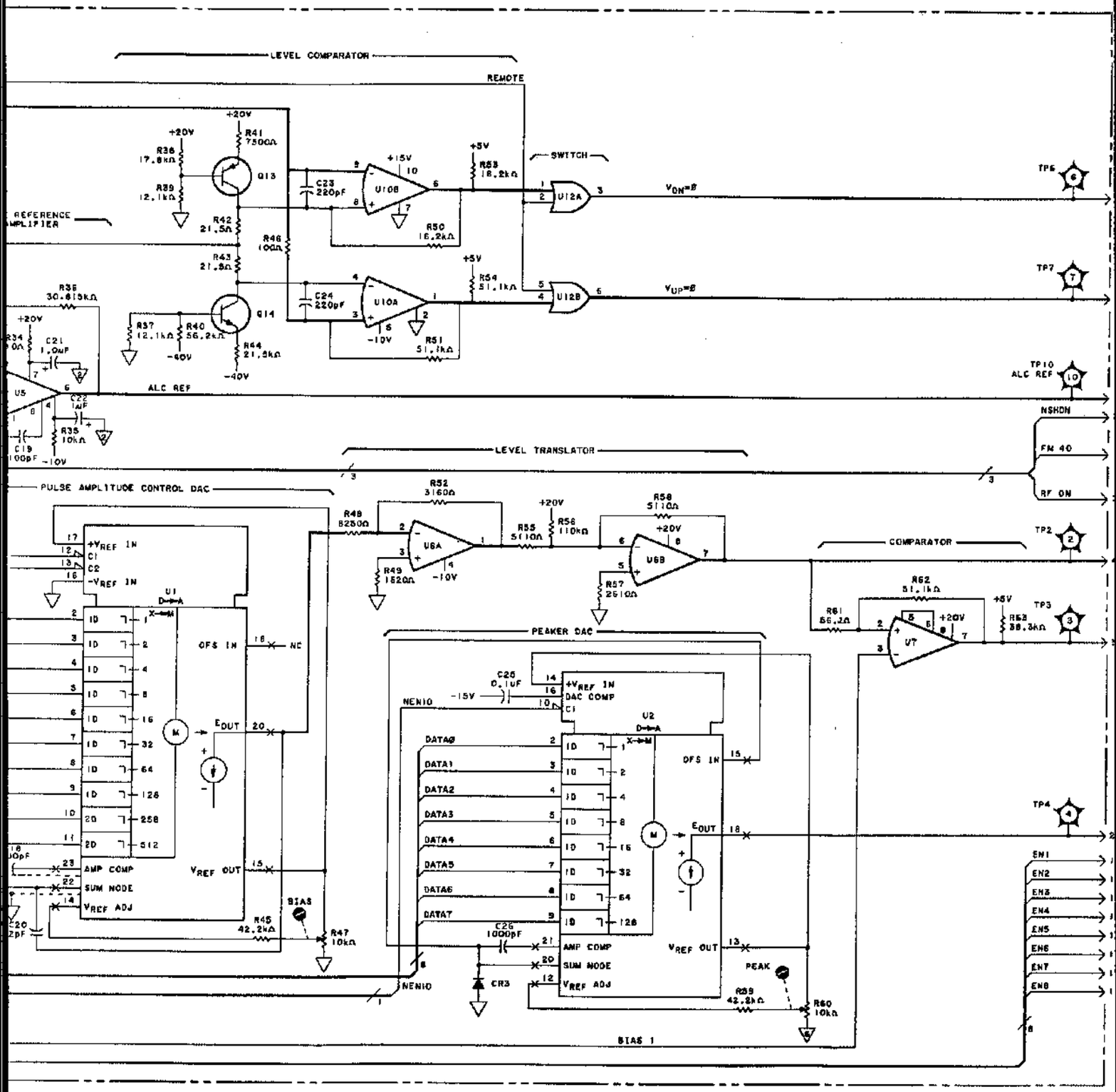


www.valuetronics.com

FIG. 8-249
Sht 4 of 4

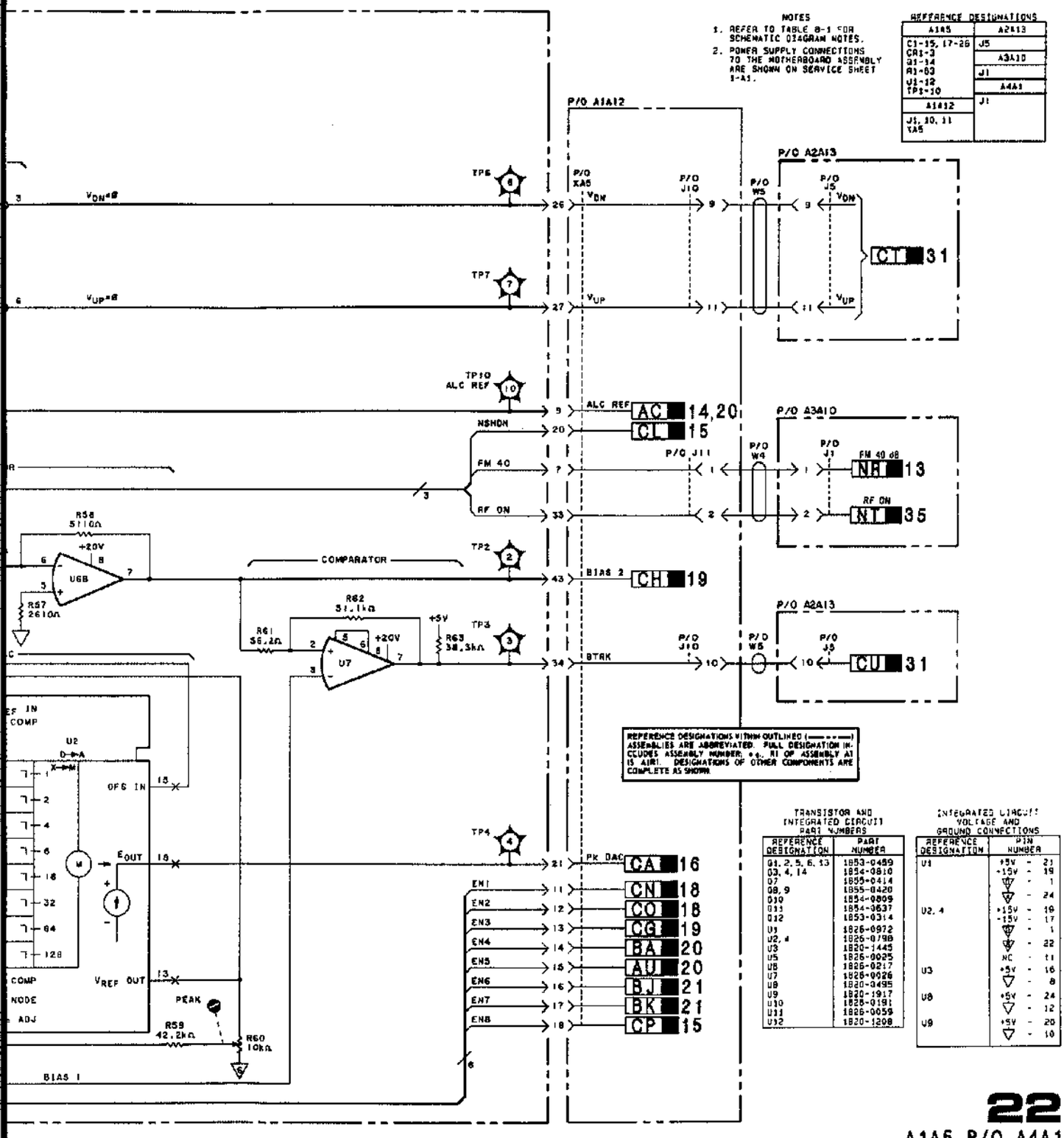


22
A1A5, P/O A4A1

Figure 8-249. DAC and Enable Assembly Schematic Diagram



www.valuetronics.com

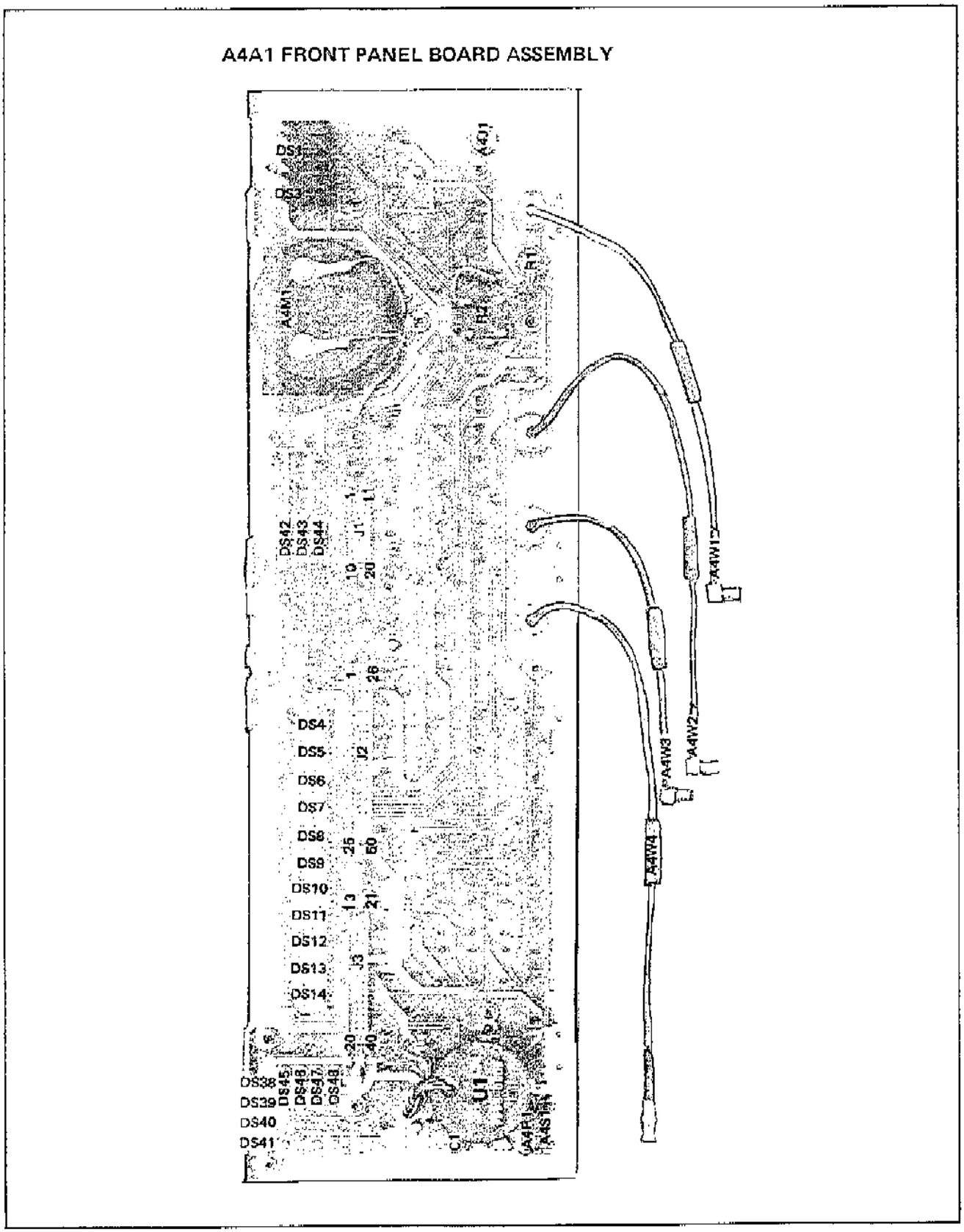


Figure 8-250. P/O A4A1 Front Panel Assembly Component Location

8-249a

www.valuetronics.com

FIG. 8-251
SHT 1 of 2

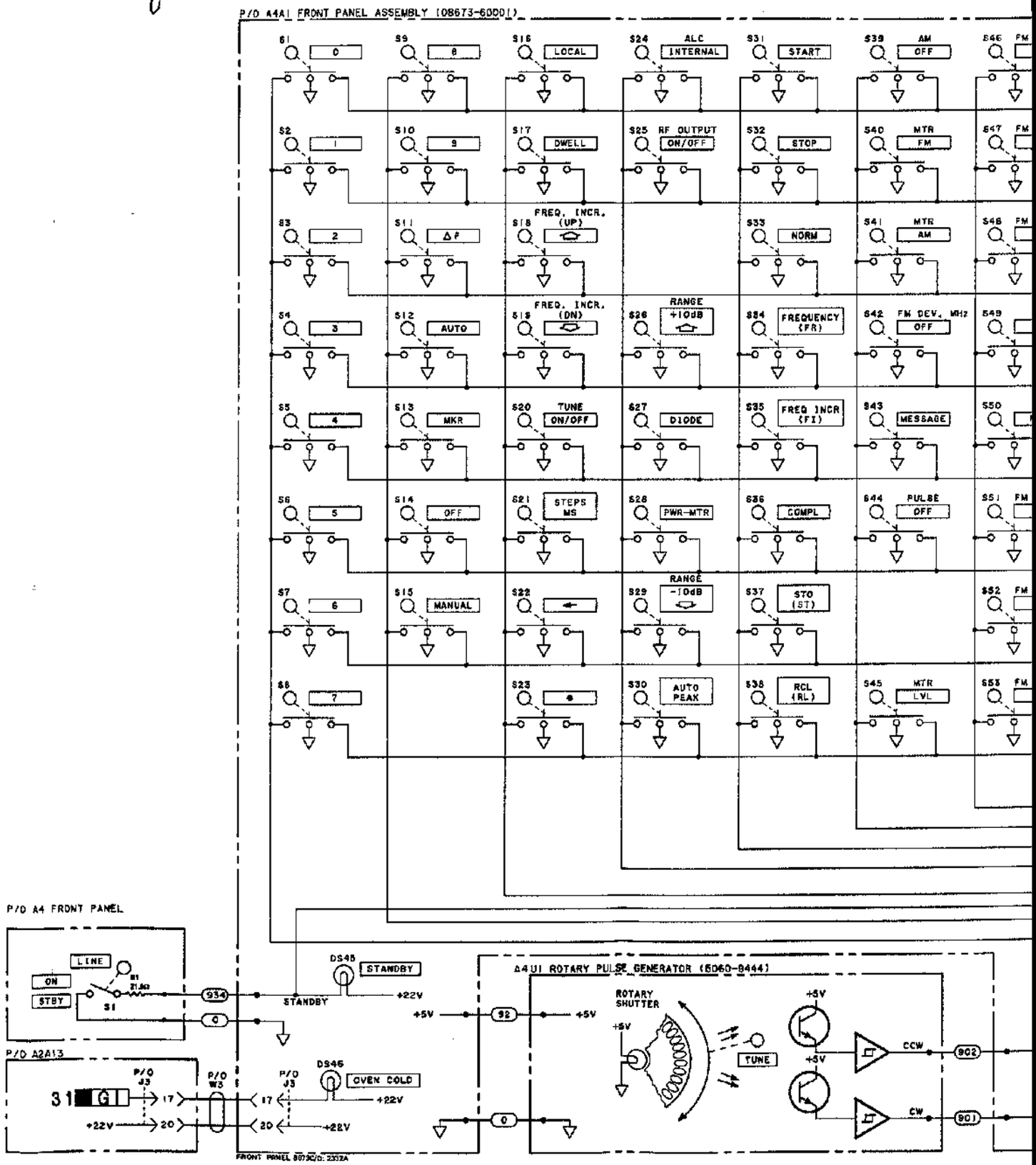


www.valuetronics.com

FIG. 8-251
Sht 2 of 2

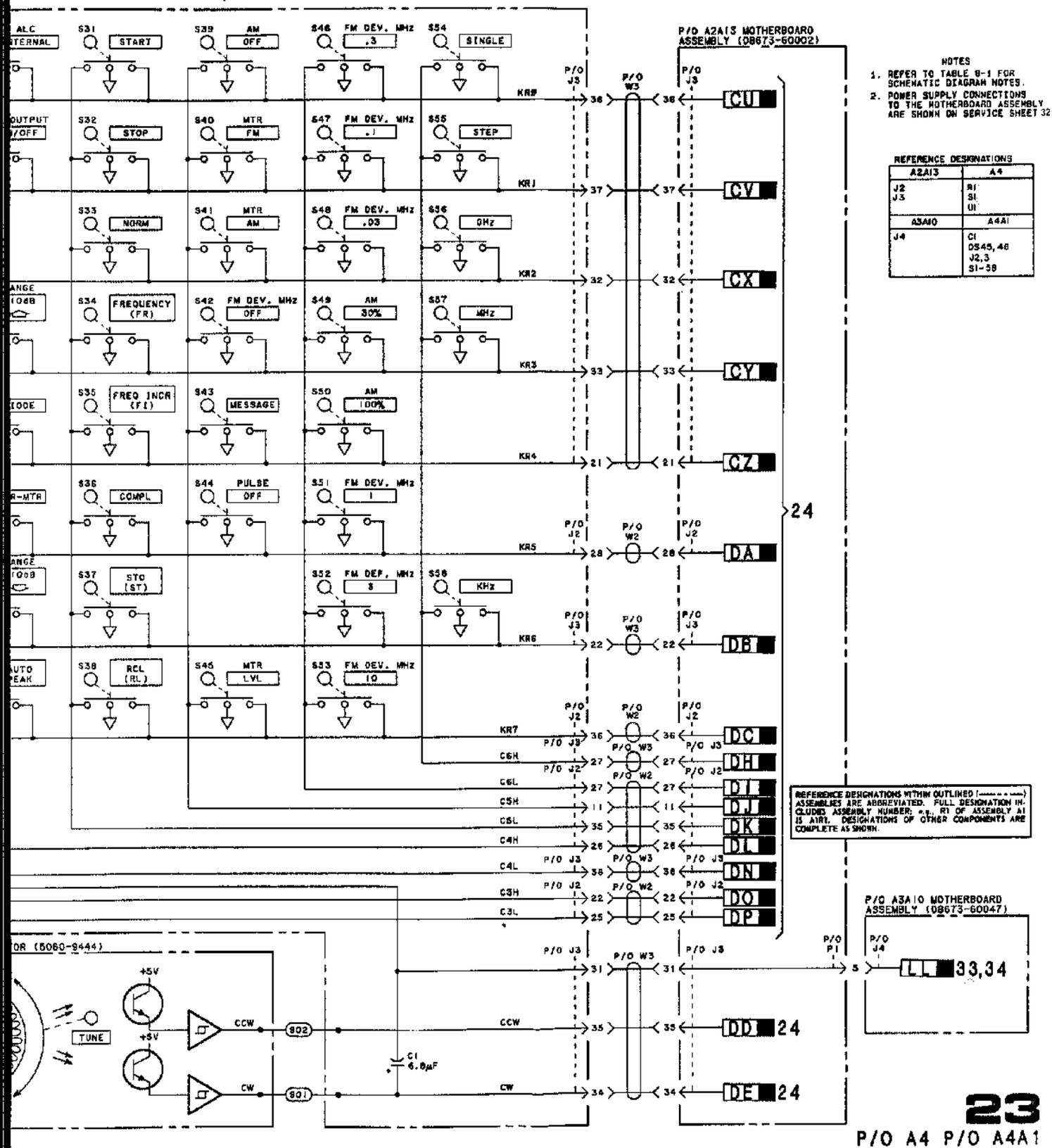


Figure 8-251. A4 Front Panel Keyboard Schematic Diagram



www.valuetronics.com

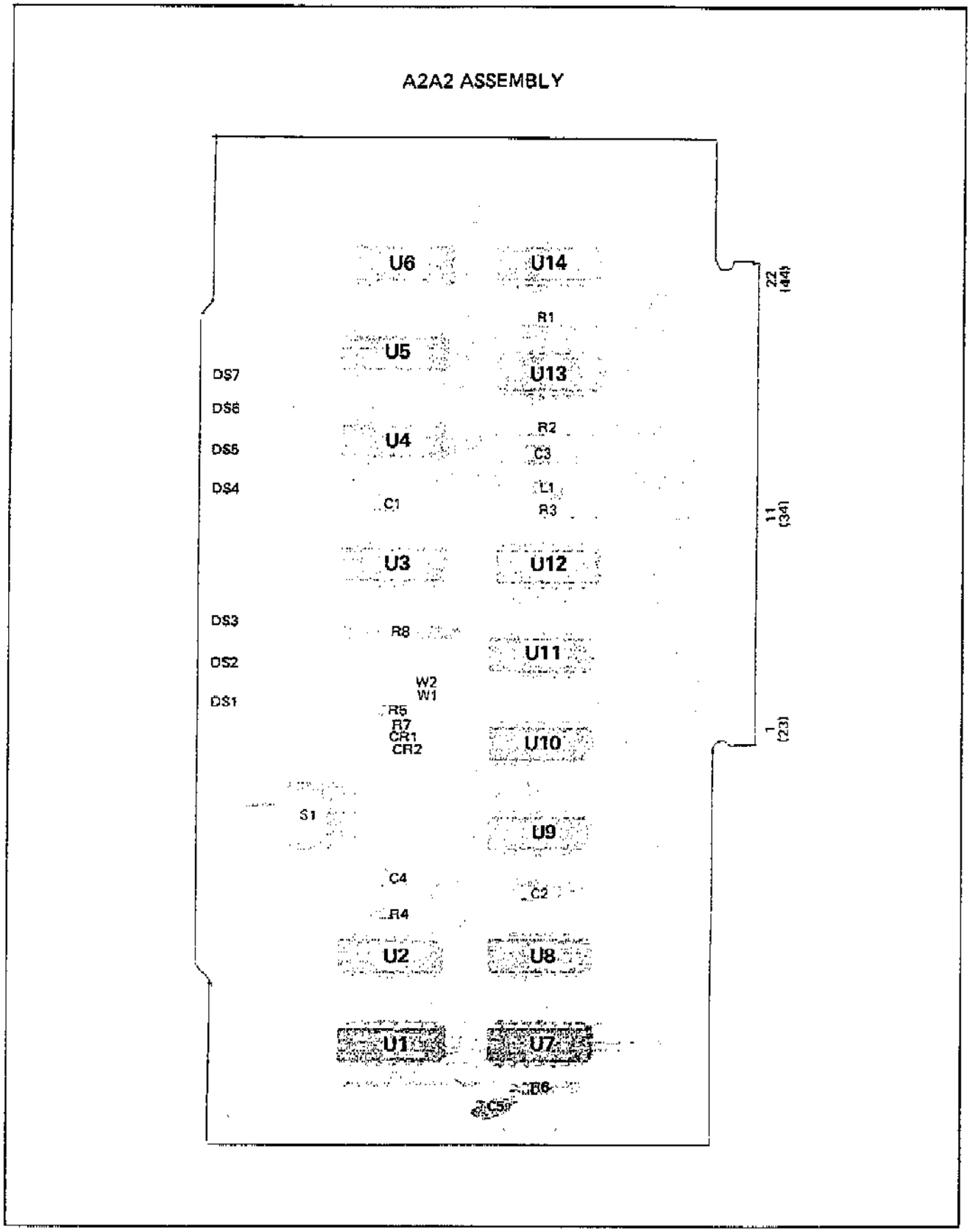


Figure 8-252. A2A2 Key Code Assembly Component Location

8-251a

www.valuetronics.com

FIG. 8-253
Sht 1 of 3

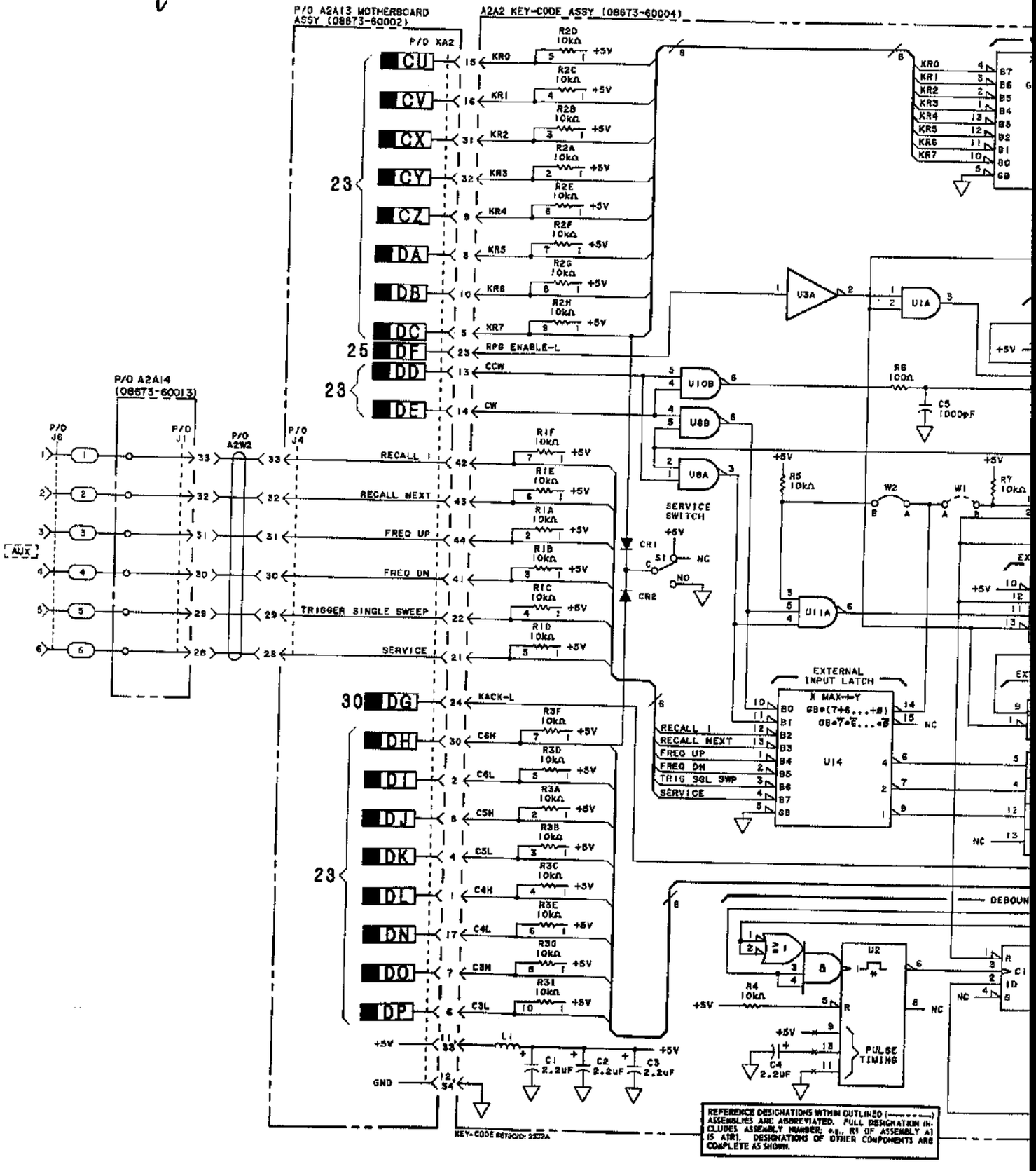


www.valuetronics.com

FIG. 8-253
Sht 2 of 3

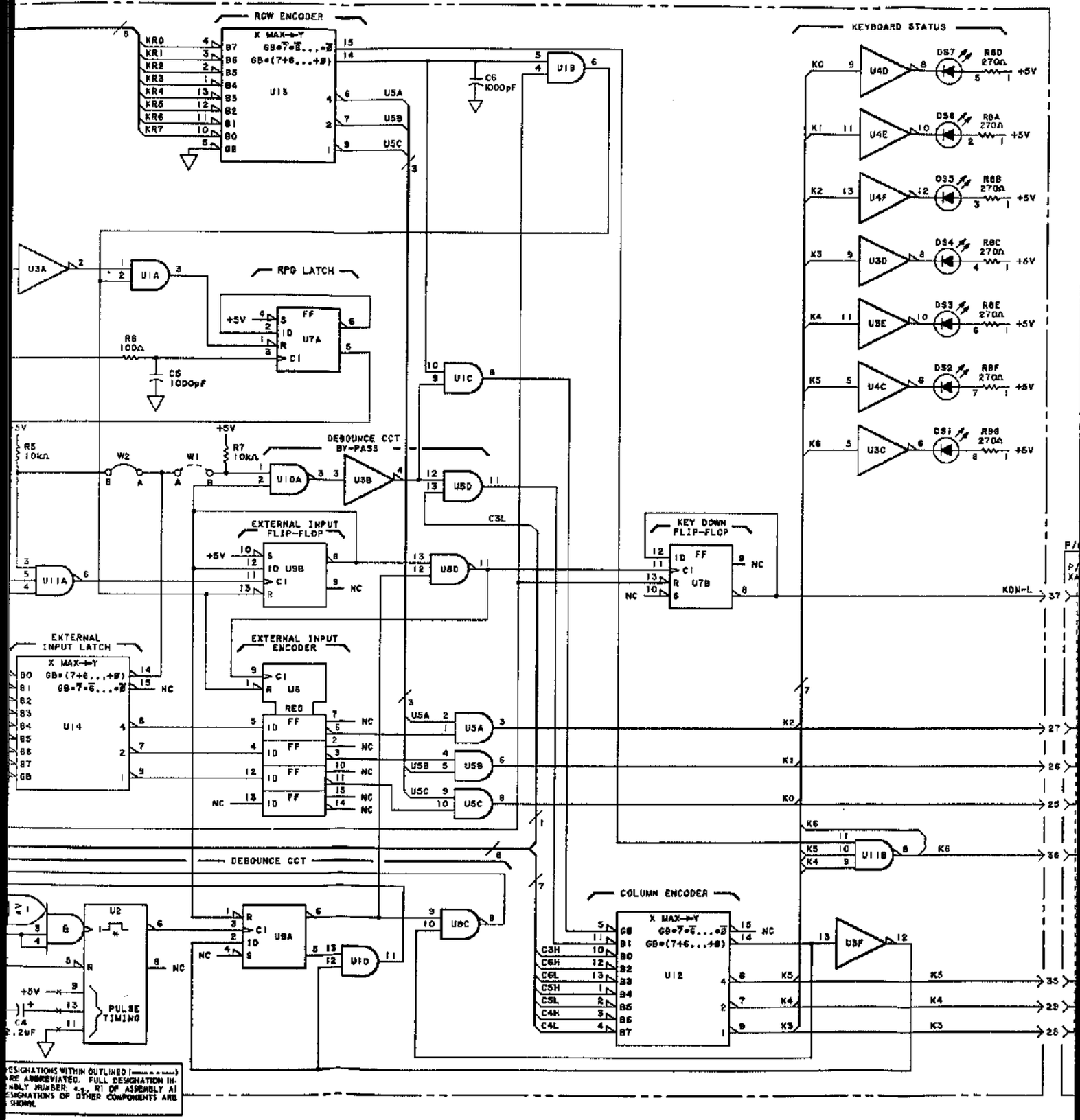


Figure 8-

www.valuetronics.com

FIG. 8-253
Sht 3 of 3

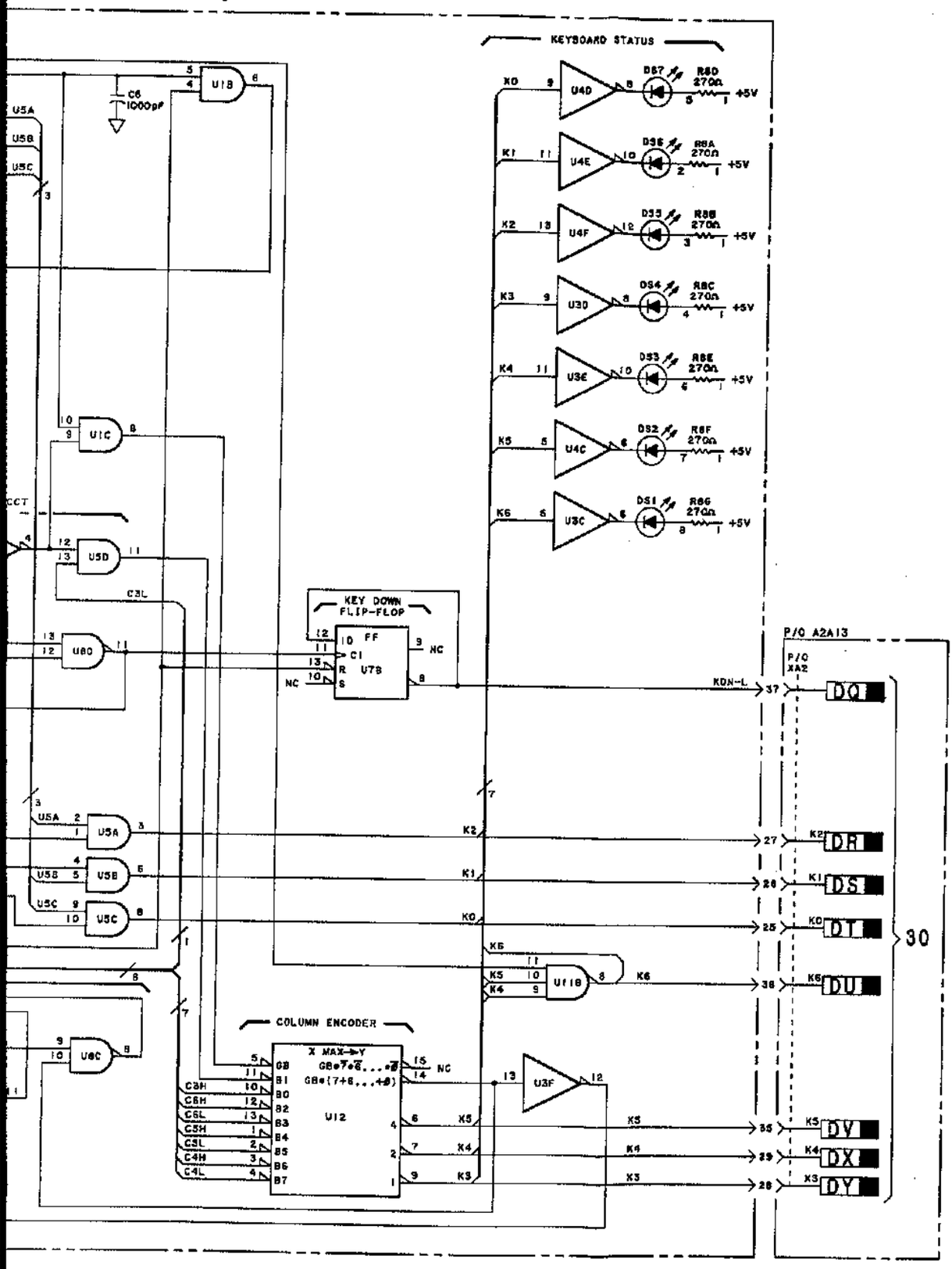


NOTES
1. REFER TO TABLE 8-1 FOR SCHEMATIC DIAGRAM NOTES.
2. POWER SUPPLY CONNECTIONS TO THE MOTHERBOARD ASSEMBLY ARE SHOWN ON SERVICE SHEET 6

REFERENCE DESIGNATIONS

| A2 | A2A2 |
|---|---|
| M2 | C1-6 |
| A2A13 | CR1, 2<br>DS1-7 |
| J4<br>XA2 | L1<br>R1-8<br>S1 |
| A2A14 | U1-14 |
| J1, 5 | W1, 2 |

TRANSISTOR AND INTEGRATED CIRCUIT PART NUMBERS

| REFERENCE DESIGNATION | PART NUMBER |
|---|---|
| U1, 5 | 1820-1201 |
| U2 | 1820-1422 |
| U3, 4 | 1820-1199 |
| U6 | 1820-1195 |
| U7, 9 | 1820-1112 |
| U8, 10 | 1820-1197 |
| U11 | 1820-1202 |
| U12, 13, 14 | 1820-1851 |

INTEGRATED CIRCUIT VOLTAGE AND GROUND CONNECTIONS

| REFERENCE DESIGNATION | PIN NUMBER |
|---|---|
| U1-5, 7-11 | +5V - 14<br>▽ - 7 |
| U6, 12-14 | +5V - 16<br>▽ - 8 |



Figure 8-253. Key Code Assembly Schematic Diagram



www.valuetronics.com

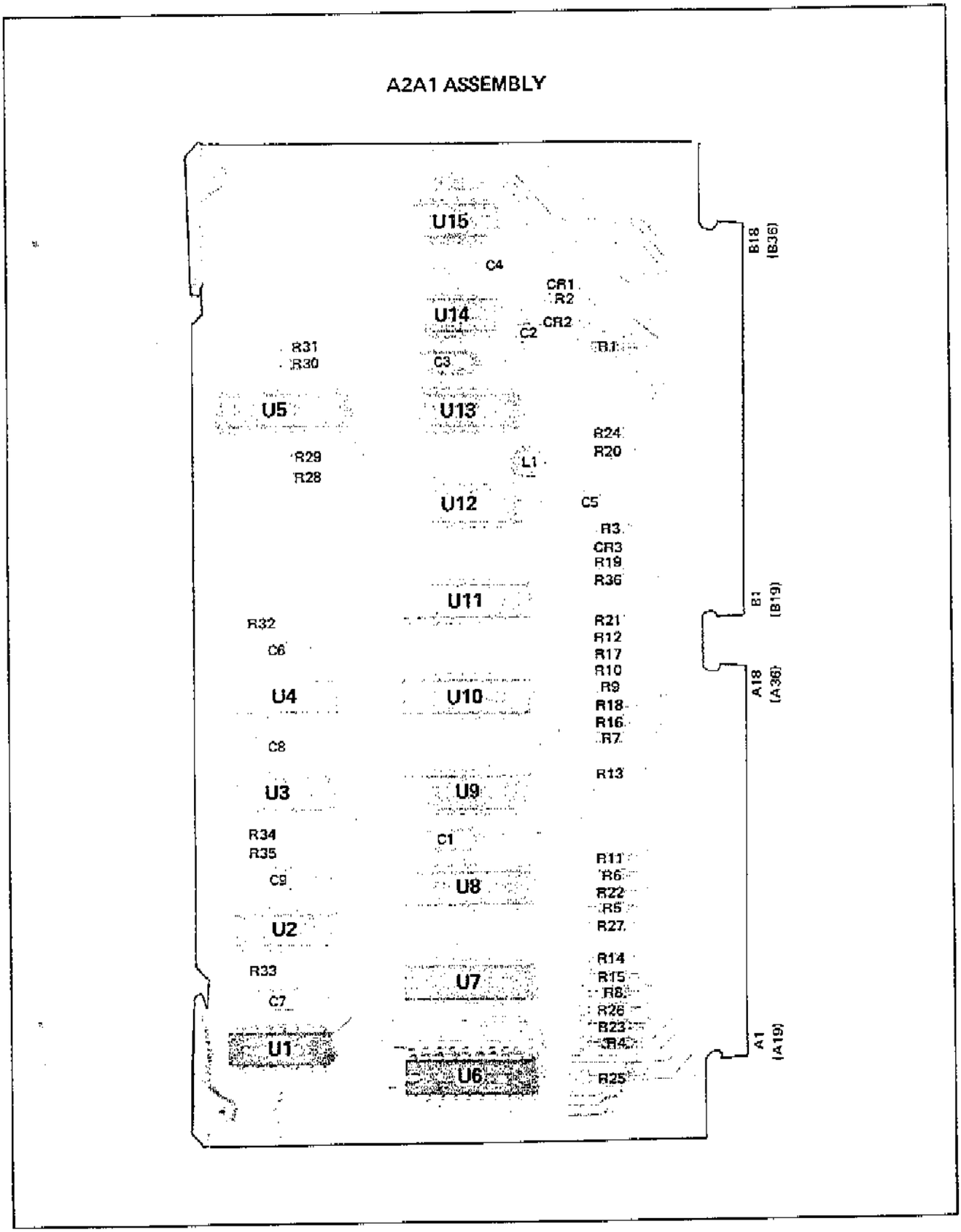


Figure 8-254. A2A1 Panel Driver Assembly Component Location

8-253a

www.valuetronics.com

FIG. 8-255
Sht 1 of 4

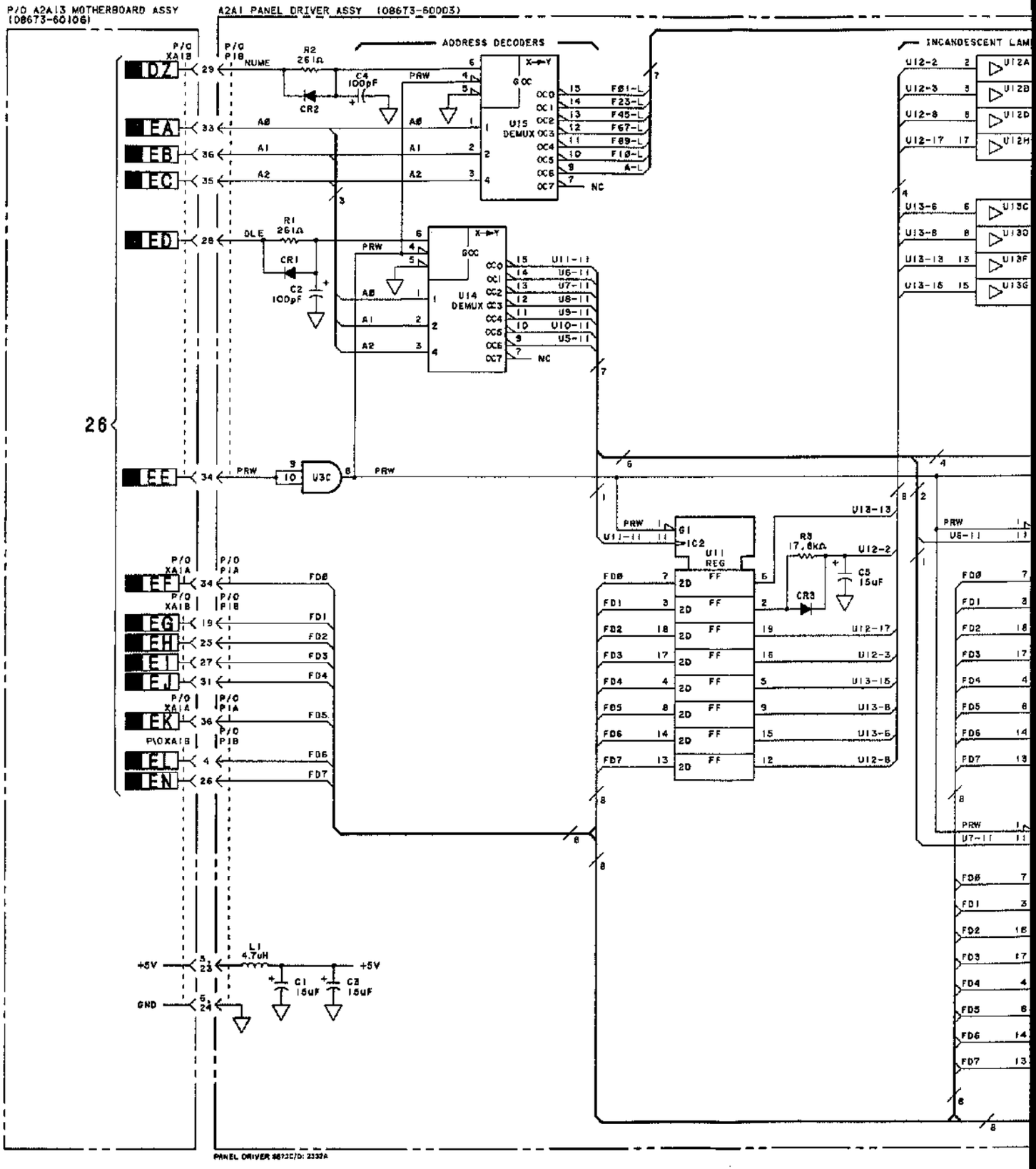


www.valuetronics.com

FIG. 8-255
Sht 2 of 4

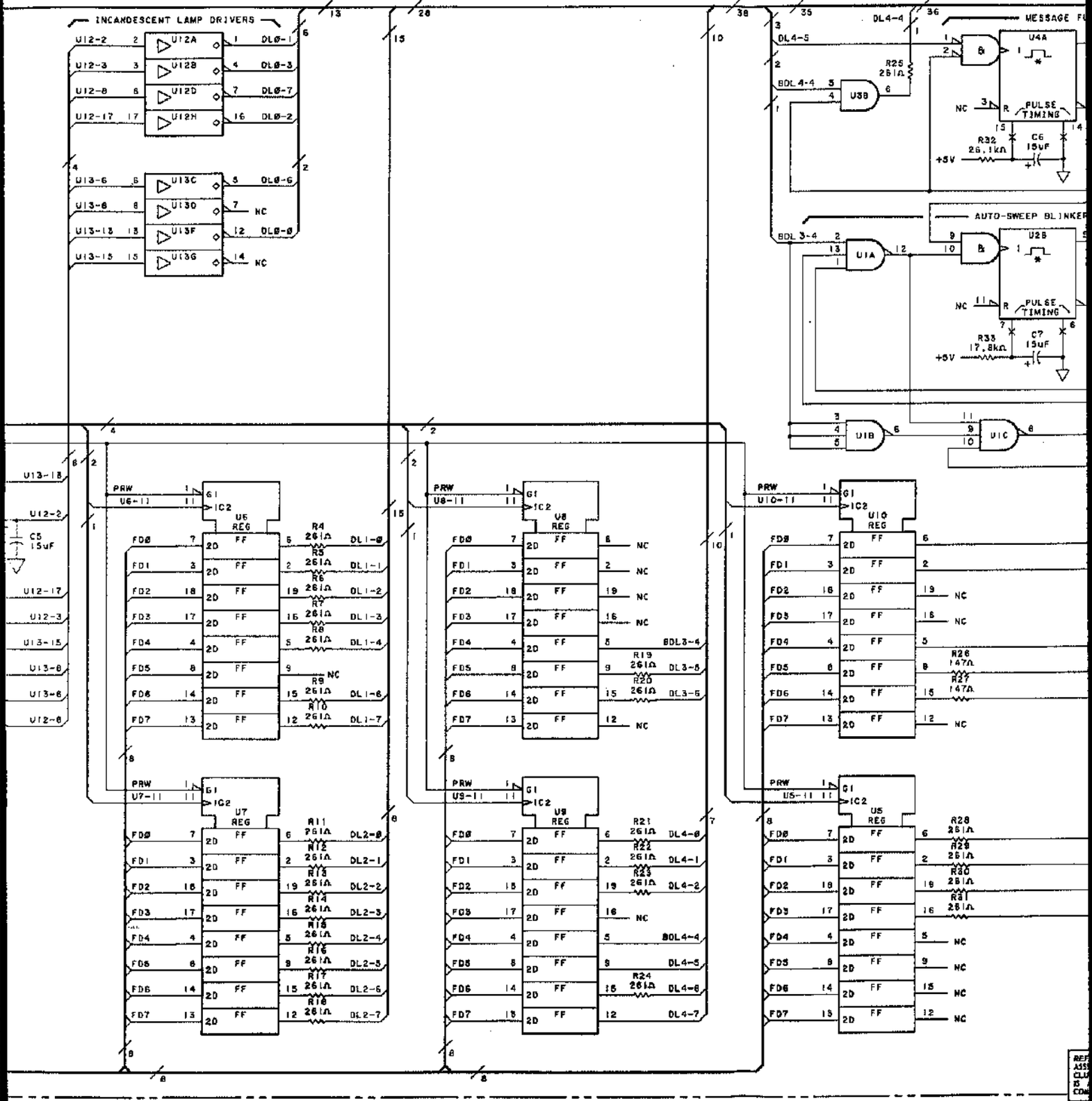


www.valuetronics.com

FIG. 8-255
Sht 3 of 4

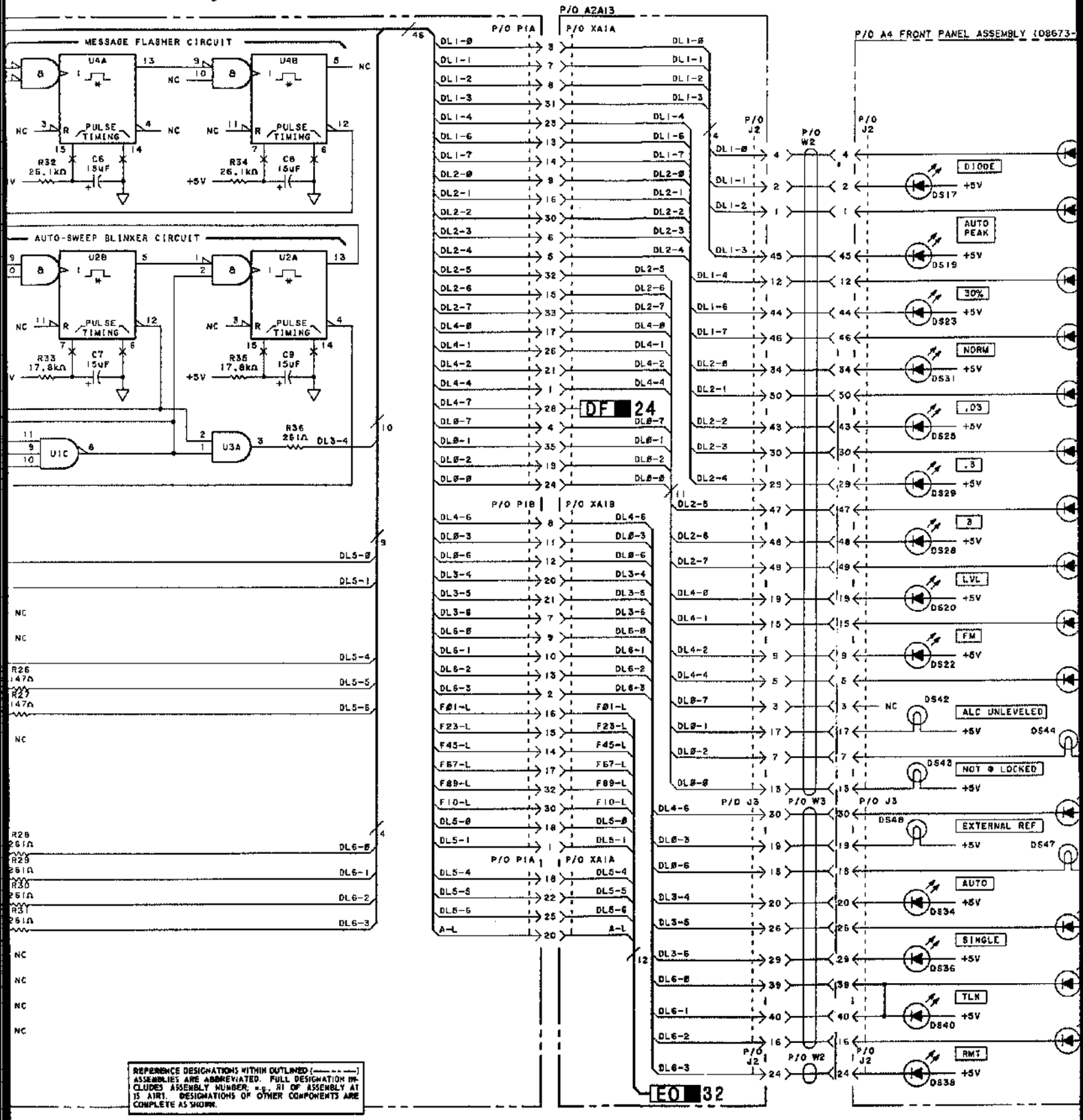


Figure 8-255

www.valuetronics.com

FIG. 8-255
Sht 4 of 4

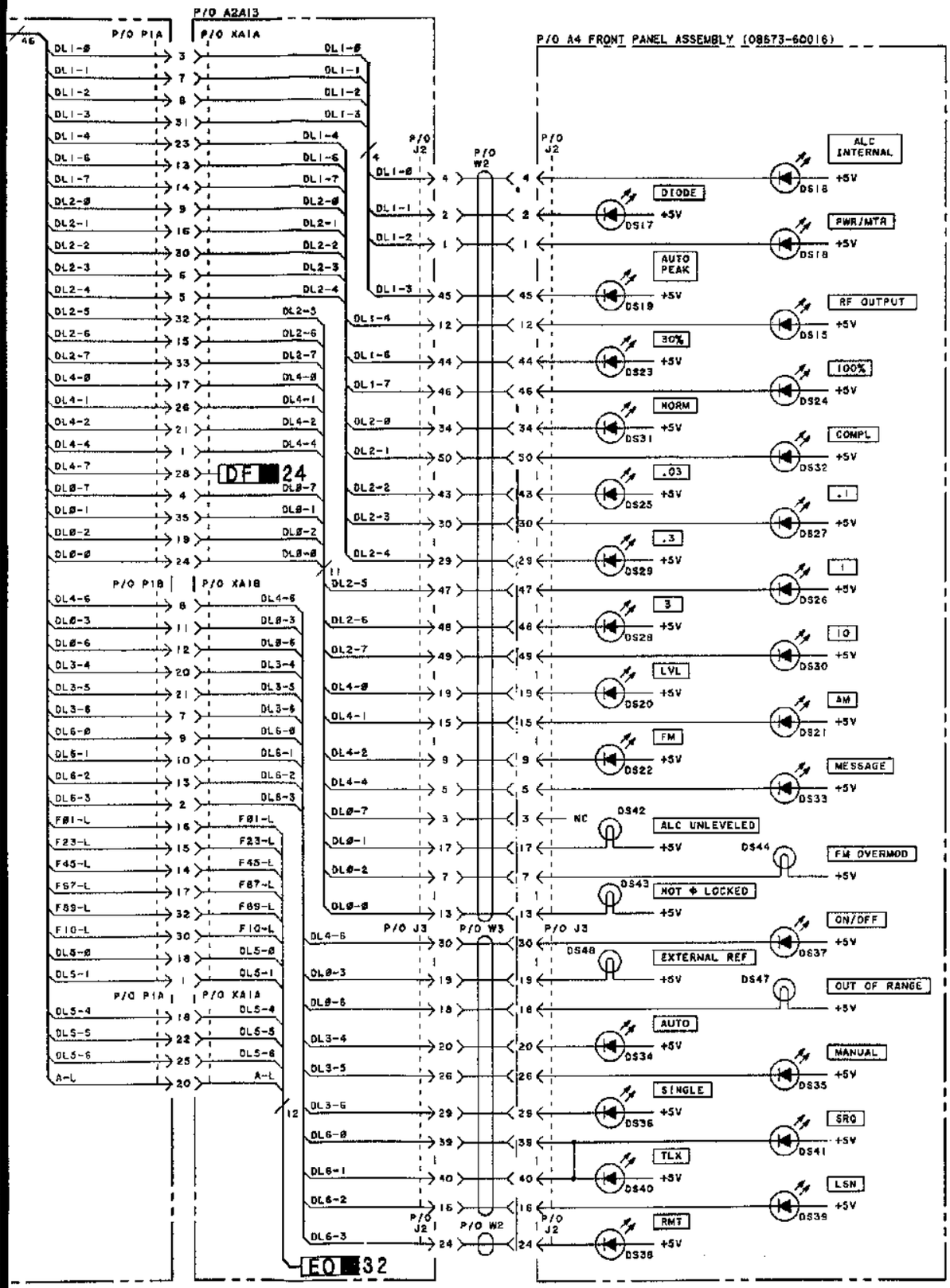


NOTES

1. REFER TO TABLE 8-1 FOR SCHEMATIC DIAGRAM NOTES.
2. POWER SUPPLY CONNECTIONS TO THE MOTHERBOARD ASSEMBLY ARE SHOWN ON SERVICE SHEET 6

REFERENCE DESIGNATIONS

| A2A1 | A2A13 |
|---|---|
| C1-9 | J2, 3 |
| CR1-3 | KA1 |
| L1 | |
| P1 | A4 |
| R1-36 | 0515-44 |
| U1-15 | 47, 48 |
| | J2, 3 |

TRANSISTOR AND INTEGRATED CIRCUIT PART NUMBERS

| REFERENCE DESIGNATION | PART NUMBER |
|---|---|
| U1 | 1820-1202 |
| U2 | 1820-1423 |
| U3 | 1820-1201 |
| U4 | 1820-1423 |
| U5-11 | 1820-1858 |
| U12, 13 | 1820-1740 |
| U15 | 1820-1216 |

INTEGRATED CIRCUIT VOLTAGE AND GROUND CONNECTIONS

| REFERENCE DESIGNATION | PIN NUMBER |
|---|---|
| U1, 3 | +5V - 14 |
| | ▽ - 7 |
| U2, 4, 14, 15 | +5V - 16 |
| | ▽ - 8 |
| U5-11 | +5V - 20 |
| | ▽ - 10 |
| U12, 13 | +5V - 18 |
| | ▽ - 9 |

25
A2A1, P/O A4

Figure 8-255. Panel Driver Assembly Schematic Diagram



www.valuetronics.com

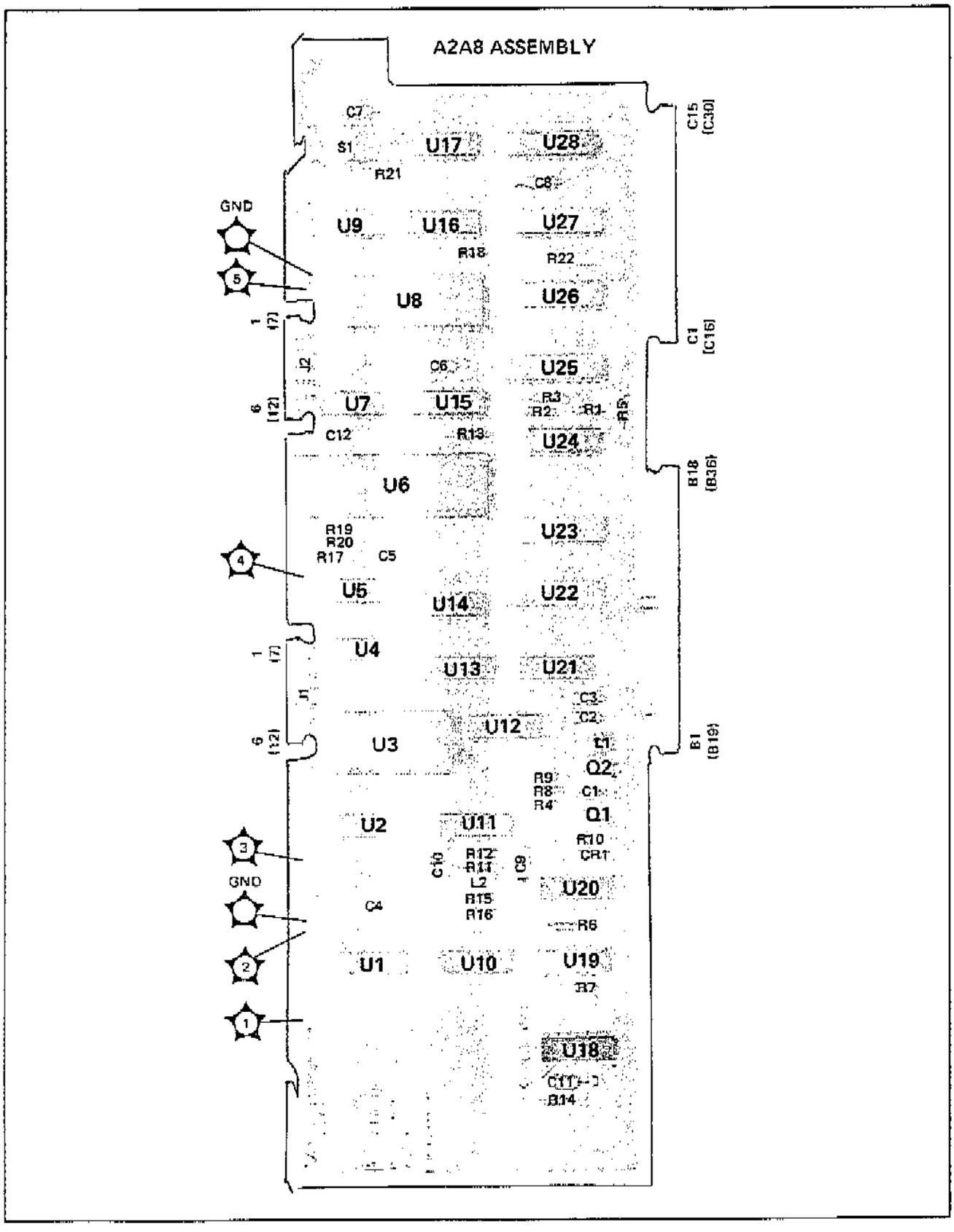


Figure 8-256. A2A8 Microprocessor Board Assembly Component and Test Point Location

8-255a

www.valuetronics.com

FIG. 8-257
Sht 1 of 4

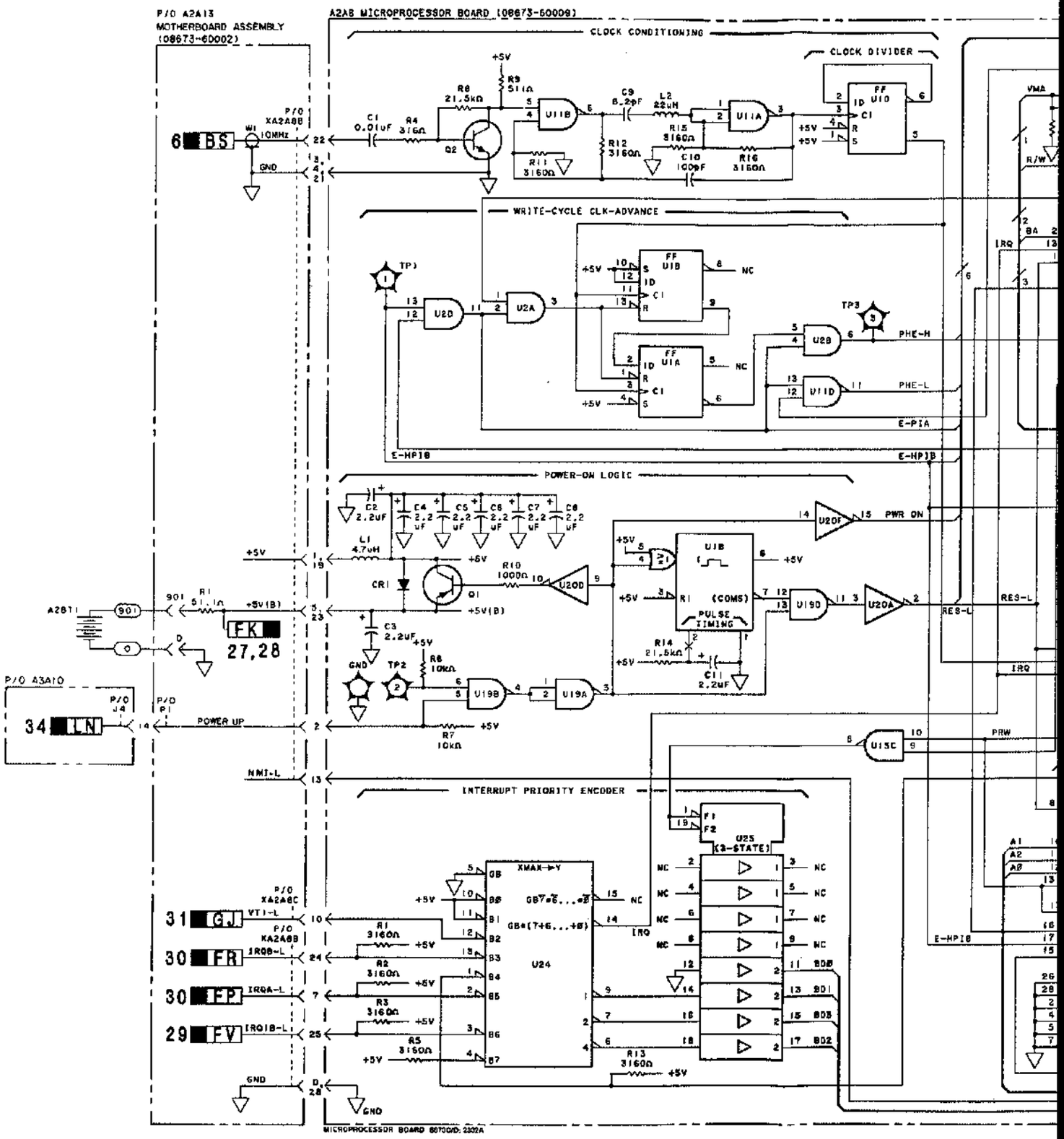


www.valuetronics.com

FIG. 8-257
Sht 2 of 4

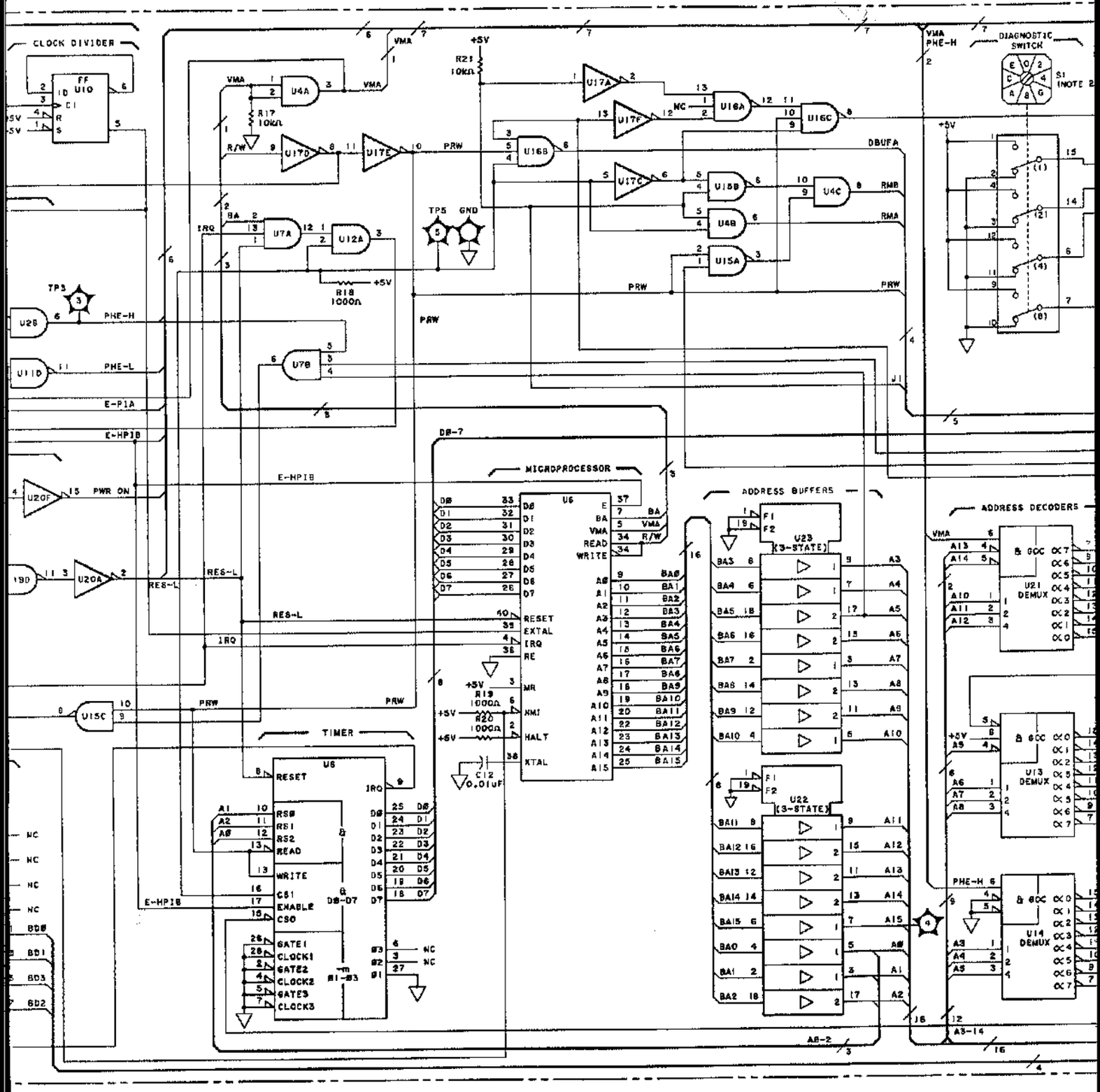


www.valuetronics.com

FIG. 8-257
SHT 3 of 4

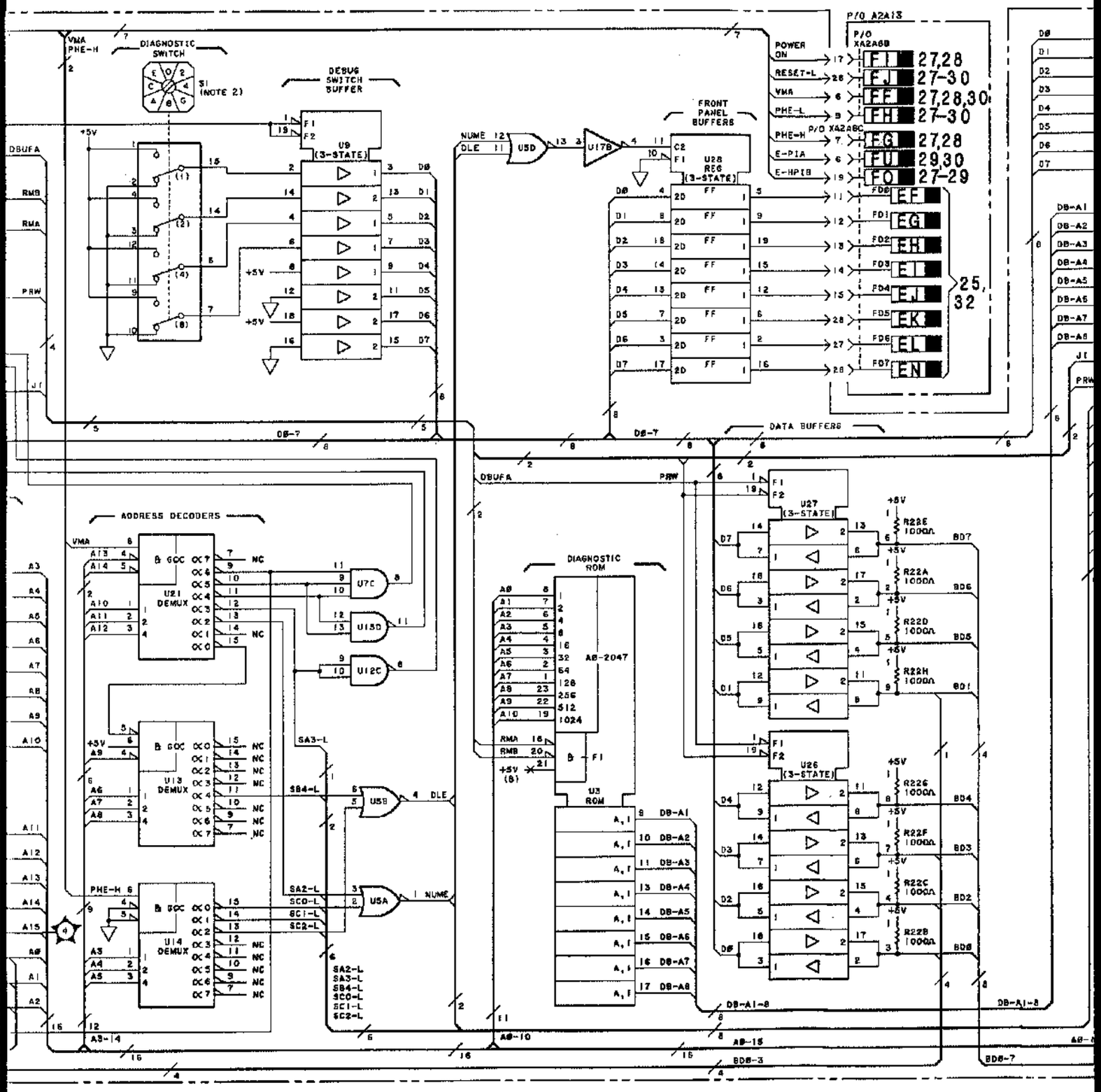


www.valuetronics.com

FIG. 8-257
SHT 4 of 4

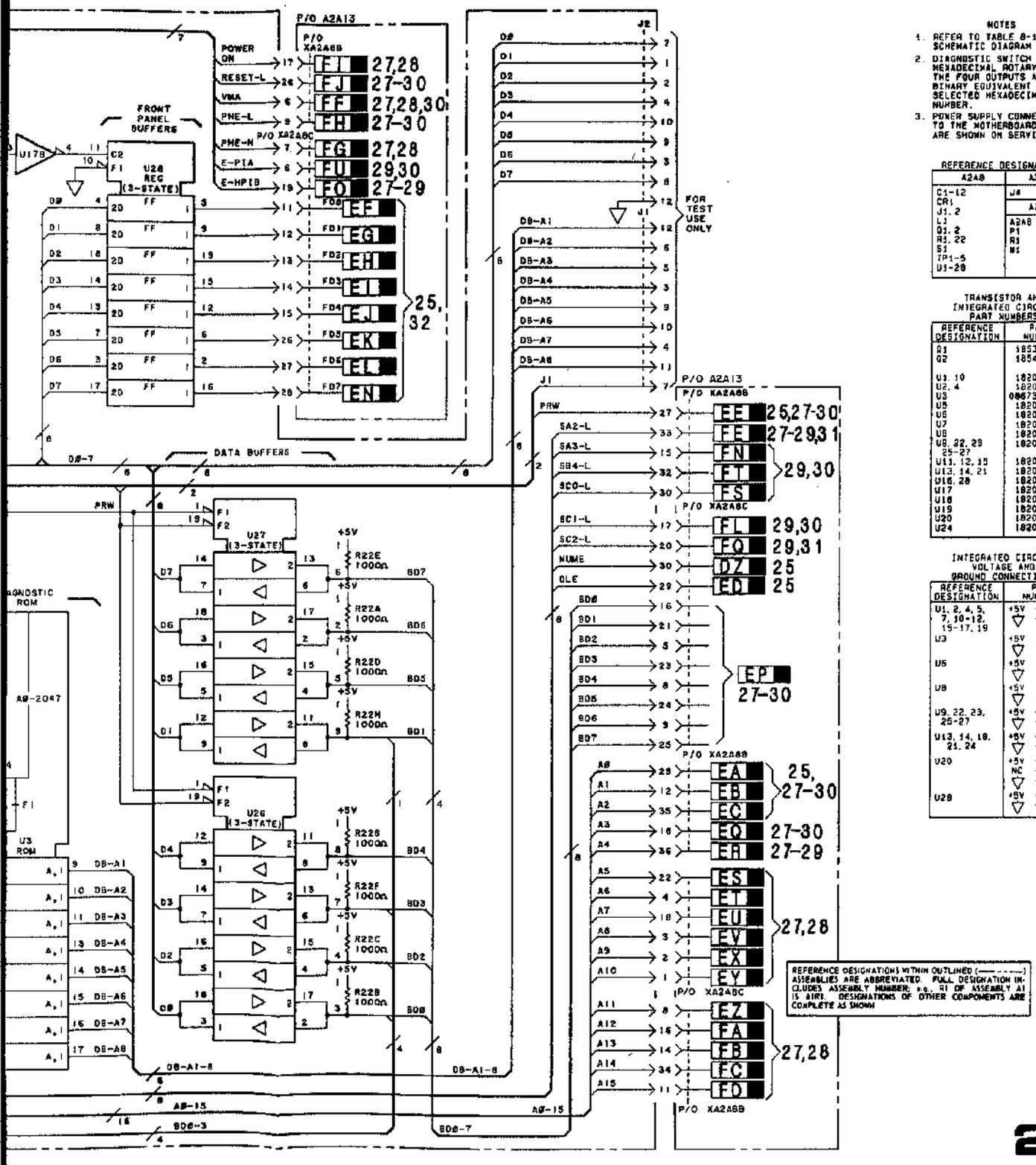


NOTES

1. REFER TO TABLE 8-1 FOR SCHEMATIC DIAGRAM NOTES.
2. DIAGNOSTIC SWITCH S3 IS A HEXADECIMAL ROTARY SWITCH. THE FOUR OUTPUTS ARE THE BINARY EQUIVALENT OF THE SELECTED HEXADECIMAL NUMBER.
3. POWER SUPPLY CONNECTIONS TO THE MOTHERBOARD ASSEMBLY ARE SHOWN ON SERVICE SHEET 6

REFERENCE DESIGNATIONS

| A2A8 | A3A10 |
|---|---|
| C1-12 | J8 |
| CR1 | A2A13 |
| J1, 2 | |
| L1 | A2A8 |
| Q1, 2 | P1 |
| R1, 22 | R1 |
| S1 | W1 |
| TP1-5 | |
| U1-28 | |

TRANSISTOR AND INTEGRATED CIRCUIT PART NUMBERS

| REFERENCE DESIGNATION | PART NUMBER |
|---|---|
| Q1 | 1853-0393 |
| Q2 | 1854-0018 |
| U1, 10 | 1820-1112 |
| U2, 4 | 1820-1201 |
| U3 | 08573-60118 |
| U5 | 1820-1144 |
| U6 | 1820-2240 |
| U7 | 1820-1203 |
| U8 | 1820-2469 |
| U9, 22, 23, 25-27 | 1820-1759 |
| U11, 12, 15 | 1820-1197 |
| U13, 14, 21 | 1820-1215 |
| U16, 28 | 1820-1202 |
| U17 | 1820-1199 |
| U18 | 1820-1932 |
| U19 | 1820-1747 |
| U20 | 1820-1746 |
| U24 | 1820-1851 |

INTEGRATED CIRCUIT VOLTAGE AND GROUND CONNECTIONS

| REFERENCE DESIGNATION | PIN NUMBER |
|---|---|
| U1, 2, 4, 5, 7, 10-12, 15-17, 19 | +5V - 14<br>▽ - 7 |
| U3 | +5V - 24<br>▽ - 12 |
| U5 | +5V - 8, 35<br>▽ - 1, 21 |
| U8 | +5V - 14<br>▽ - 1 |
| U9, 22, 23, 25-27 | +5V - 20<br>▽ - 10 |
| U13, 14, 18, 21, 24 | +5V - 15<br>▽ - 8 |
| U20 | +5V - 1<br>NC - 13, 16<br>▽ - 8 |
| U28 | +5V - 10<br>▽ - 20 |

REFERENCE DESIGNATIONS WITHIN OUTLINED (— — —) ASSEMBLIES ARE ABBREVIATED. FULL DESIGNATION INCLUDES ASSEMBLY NUMBER; e.g., R1 OF ASSEMBLY A1 IS A1R1. DESIGNATIONS OF OTHER COMPONENTS ARE COMPLETE AS SHOWN

**26**
**A2A8**

**Figure 8-257. Microprocessor Assembly Schematic Diagram**



www.valuetronics.com

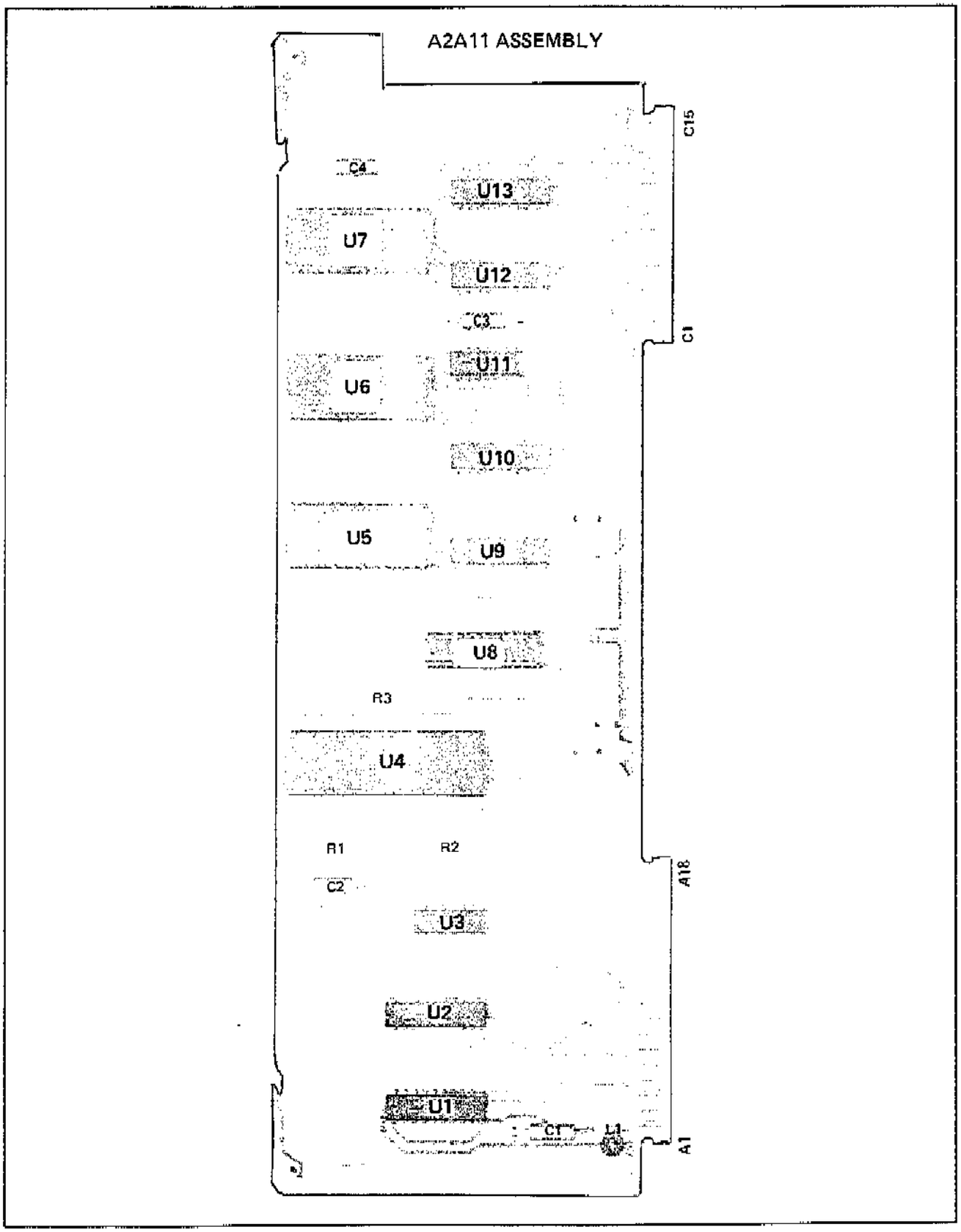


Figure 8-258. A2A11 Rom Assembly Component Location



www.valuetronics.com

Fig. 8-259
Sht 1 of 3

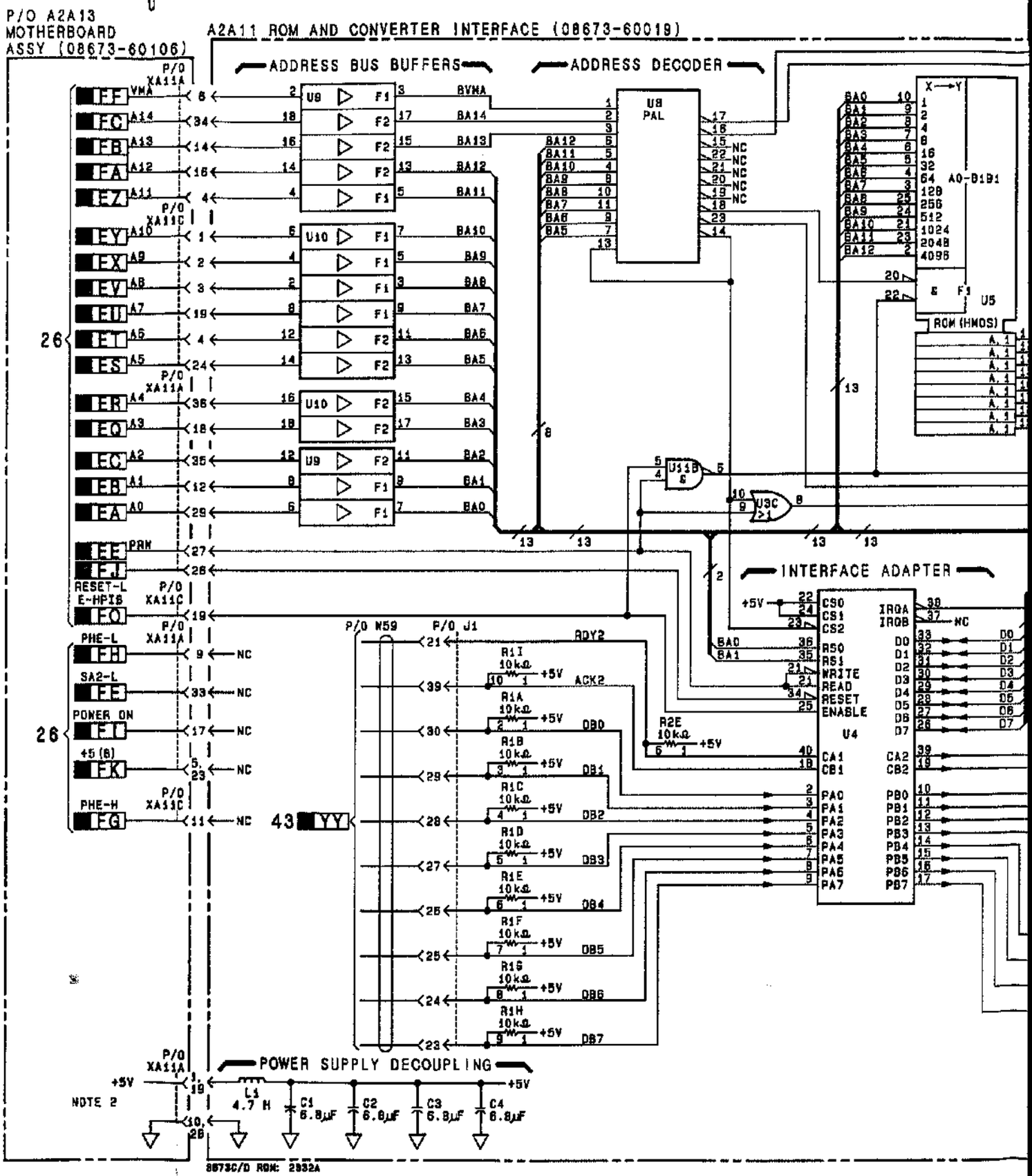


www.valuetronics.com

FIG. 8-259
Sht 2 of 3

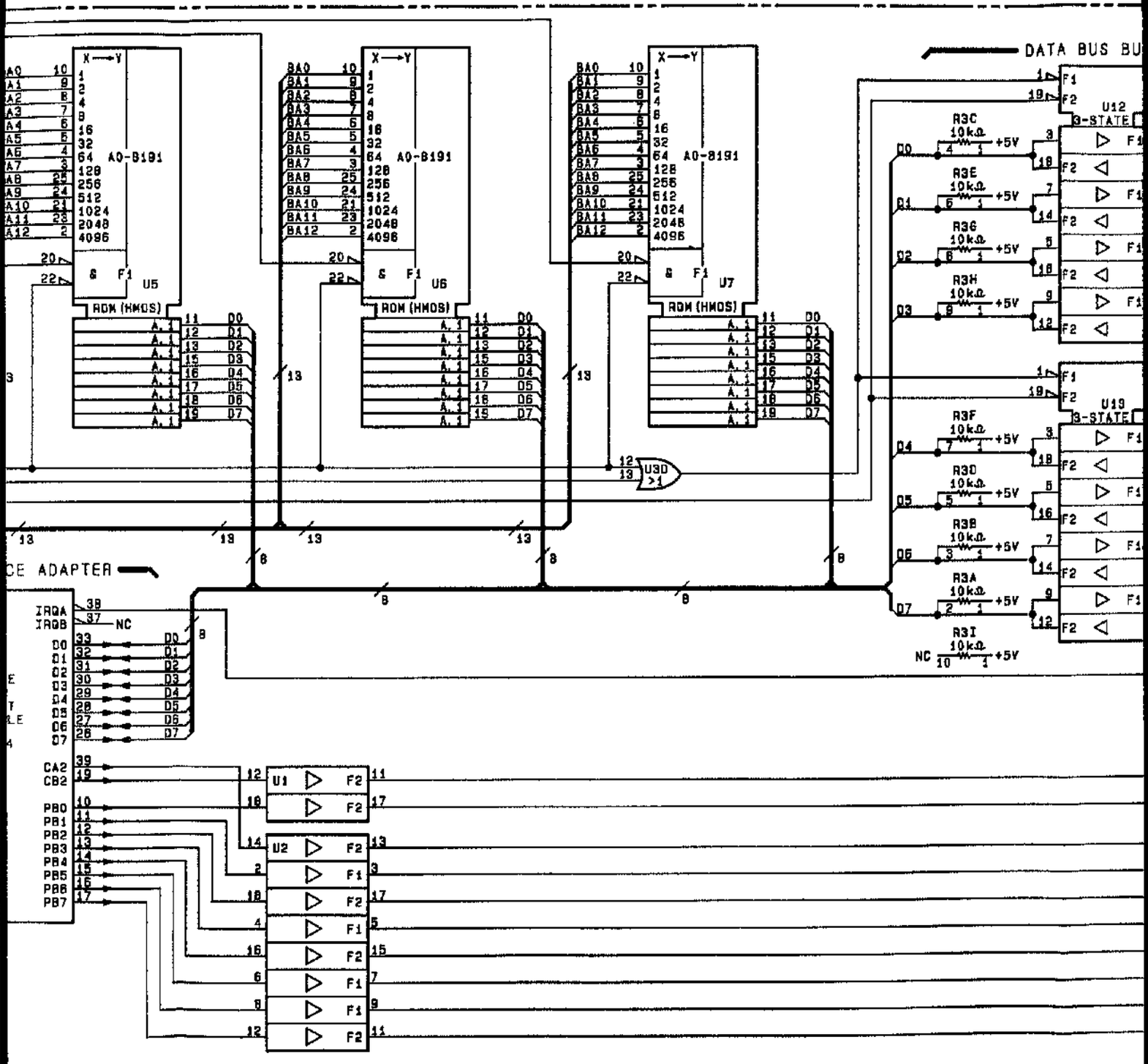


www.valuetronics.com

FIG. 8-259
Sht 3 of 3

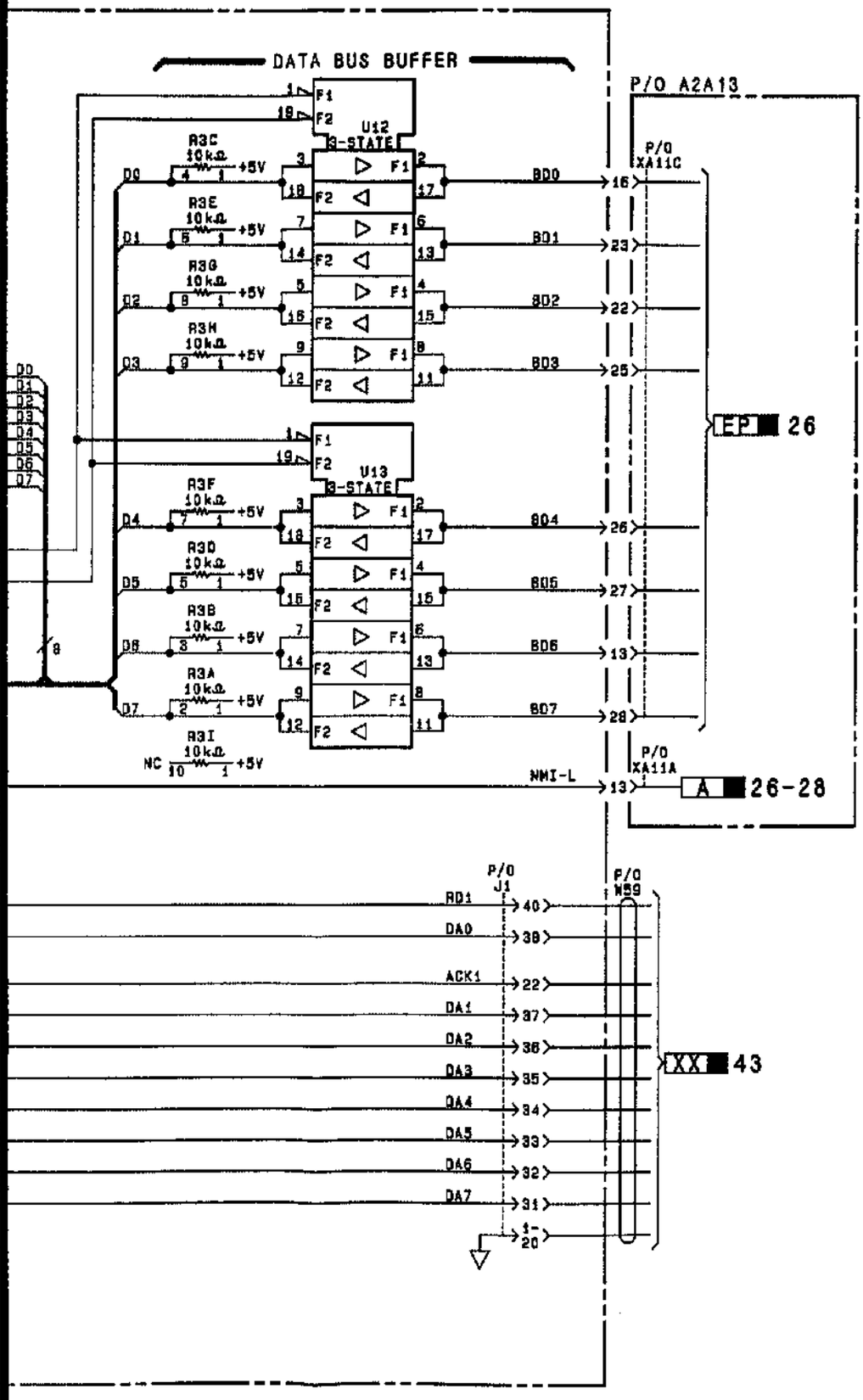


NOTES

1. REFER TO TABLE 8-1 FOR SCHEMATIC DIAGRAM NOTES.
2. POWER SUPPLY CONNECTIONS TO THE MOTHERBOARD ASSEMBLY ARE SHOWN ON SERVICE SHEET 8.

REFERENCE DESIGNATIONS

| A2A11 | A2A13 |
|---|---|
| C1-4 | XA11A, C |
| J1 | NO PREFIX |
| L1 | |
| R1-3 | N59 |
| U1-13 | |

TRANSISTOR AND INTEGRATED CIRCUIT PART NUMBERS

| REFERENCE DESIGNATION | PART NUMBER |
|---|---|
| U1, 2, 9, 10, 12, 13 | 1820-1759 |
| U3 | 1820-1208 |
| U4 | 1820-2081 |
| U5 | 08673-80031 |
| U6 | 08673-80032 |
| U7 | 08673-80033 |
| U8 | 08673-80014 |
| U11 | 1820-1197 |

INTEGRATED CIRCUIT VOLTAGE AND GROUND CONNECTIONS

| REFERENCE DESIGNATION | PIN NUMBER |
|---|---|
| U1, 2, 9, 10, | +5V - 20<br>▽ - 1, 10, 19 |
| U3, 11 | +5V - 14<br>▽ - 7 |
| U4 | +5V - 20<br>▽ - 1 |
| U5-7 | +5V - 1, 27, 28<br>▽ - 14 |
| U8 | +5V - 24<br>▽ - 12 |
| U12, 13 | +5V - 20<br>▽ - 10 |

27
A2A11

Figure 8-259. ROM Assembly Schematic Diagram



www.valuetronics.com

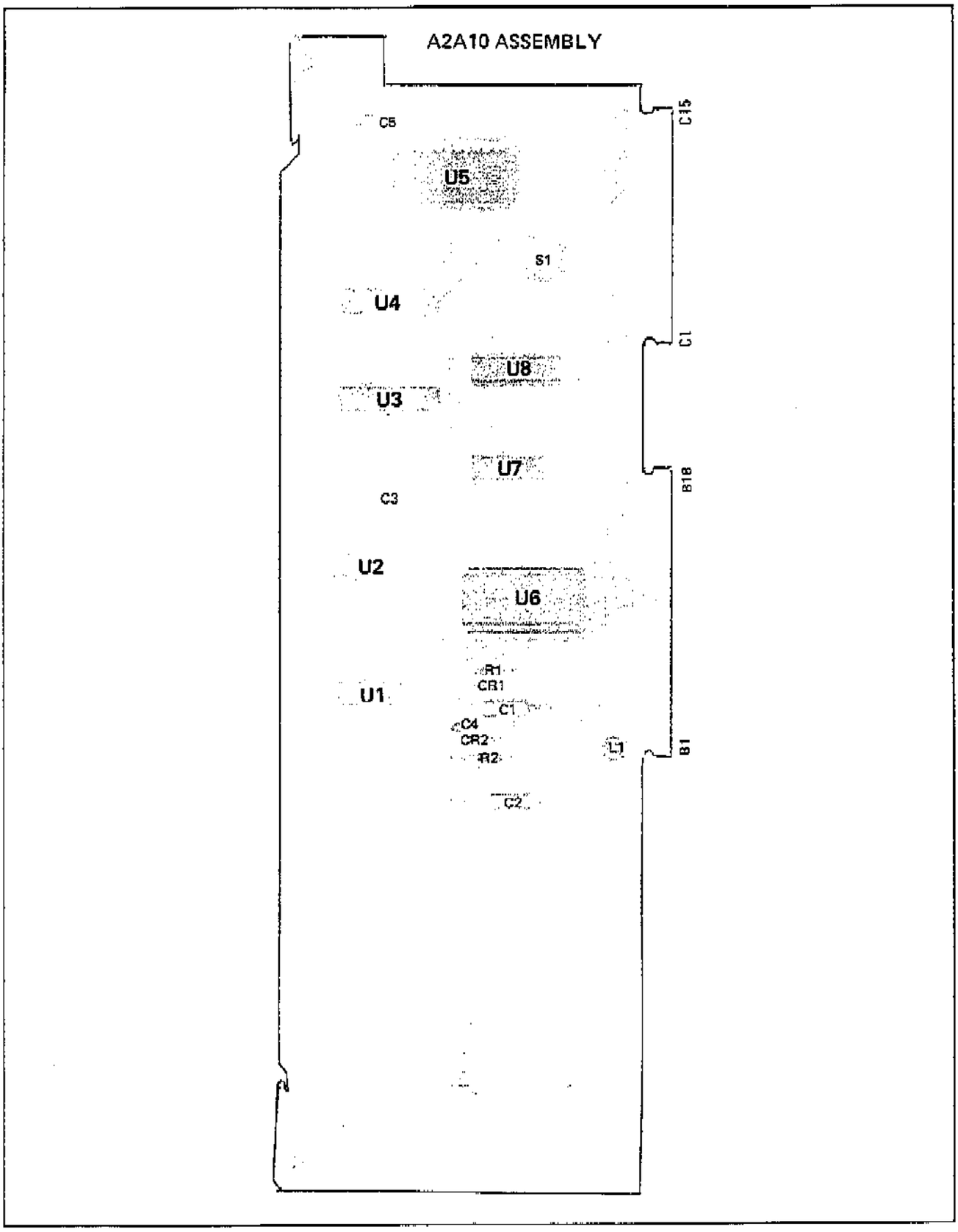


Figure 8-260. A2A10 RAM Assembly Component and Test Point Location

8-259a

www.valuetronics.com

FIG. 8-261
Sht 1 of 4

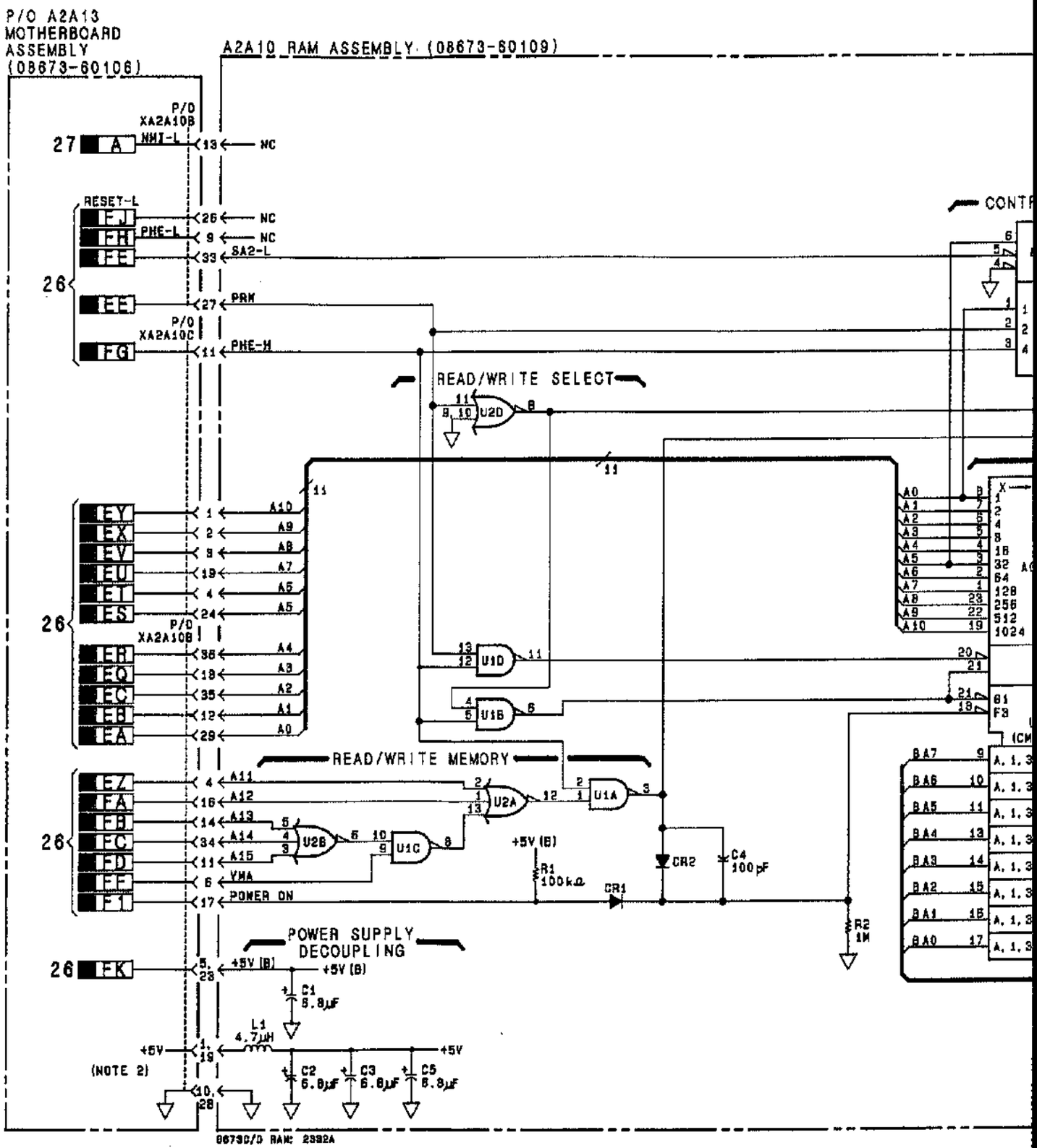


www.valuetronics.com

FIG. 8-261
Sht 2 of 4

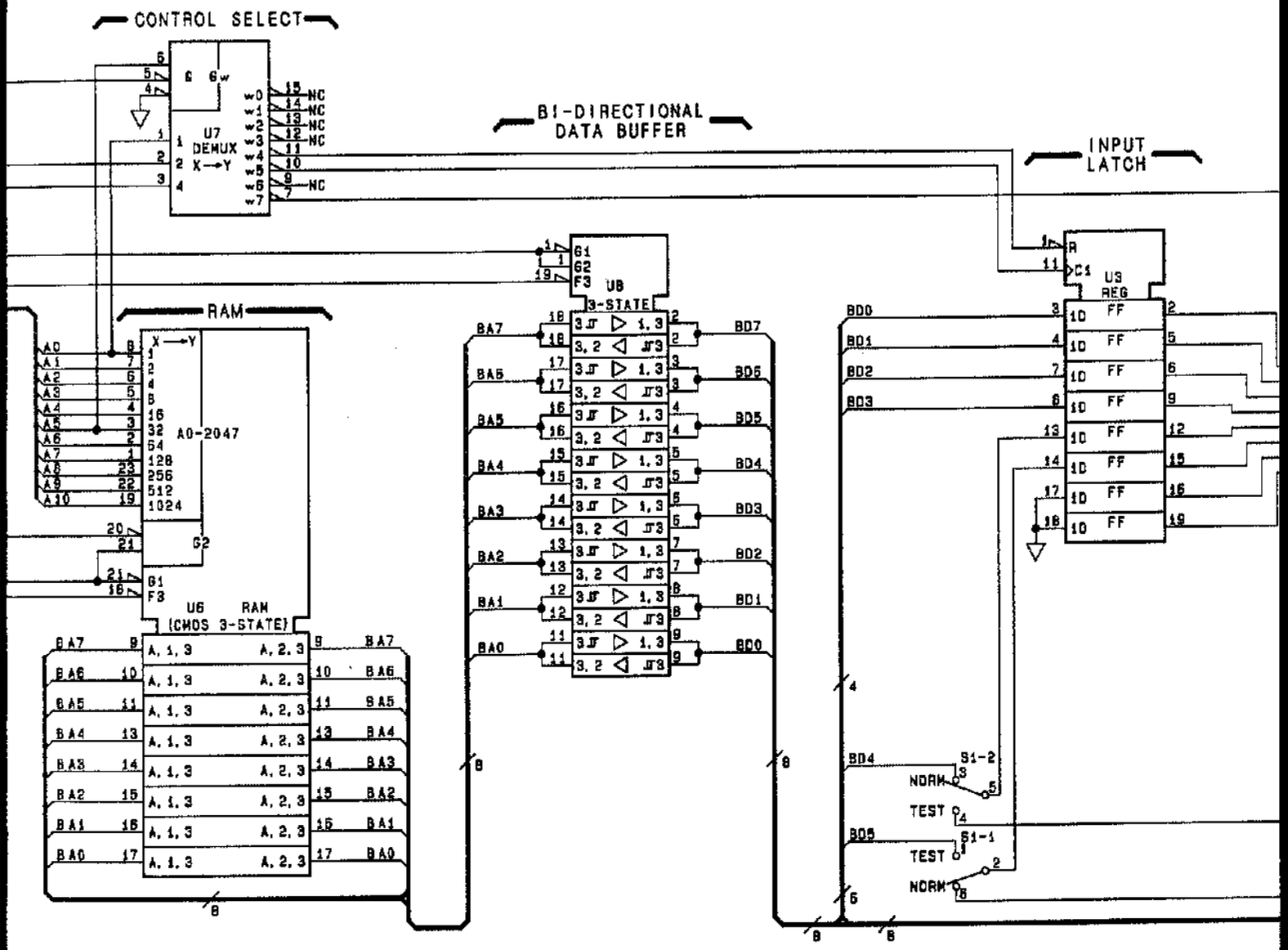


www.valuetronics.com

FIG. 8-261
Sht 3 of 4

NOTES

1. REFER TO TABLE 8-1 FOR SCHEMATIC DIAGRAM NOTES.
2. POWER SUPPLY CONNECTIONS TO THE MOTHERBOARD ASSEMBLY ARE SHOWN ON SERVICE SHEET 8.

REFERENCE DESIGNATIONS

| A2A10 | A2A13 |
|---|---|
| C1-5<br>CR1, 2<br>L1<br>S1<br>U1-8 | XA2A10B, C |

TRANSISTOR AND INTEGRATED CIRCUIT PART NUMBERS

| REFERENCE DESIGNATION | PART NUMBER |
|---|---|
| U1 | 1820-1197 |
| U2 | 1820-1206 |
| U3 | 08673-80001 |
| U4 | 1820-1759 |
| U5 | 1818-0498 |
| U6 | 1818-1758 |
| U7 | 1820-1216 |
| U8 | 1820-2075 |

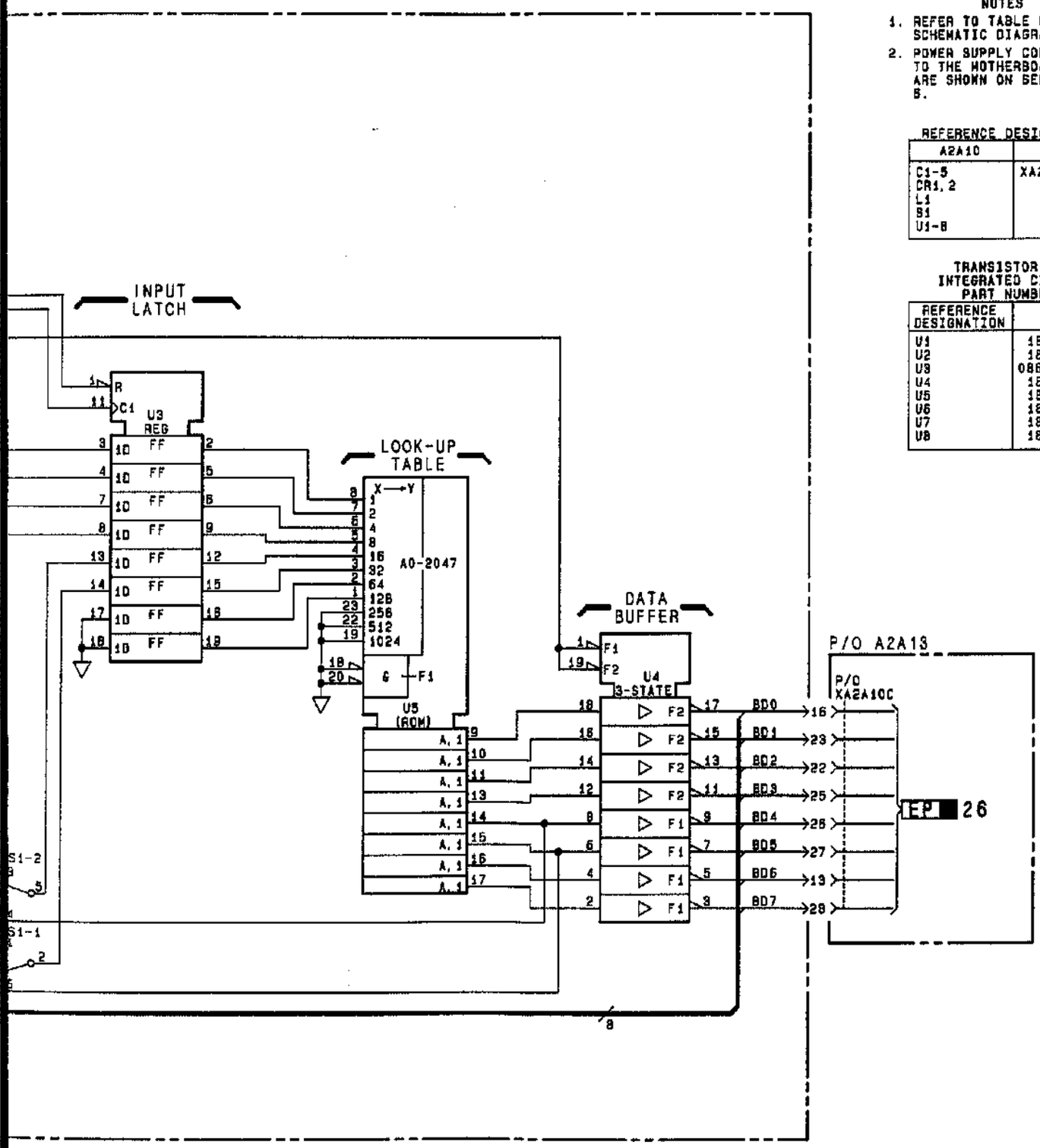


Figure 8-261. RAM Assembl

www.valuetronics.com

FIG. 8-261
Sht 4 of 4

NOTES

1. REFER TO TABLE 8-1 FOR SCHEMATIC DIAGRAM NOTES.
2. POWER SUPPLY CONNECTIONS TO THE MOTHERBOARD ASSEMBLY ARE SHOWN ON SERVICE SHEET 6.

REFERENCE DESIGNATIONS

| A2A10 | A2A13 |
|---|---|
| C1-5<br>CR1, 2<br>L1<br>S1<br>U1-9 | XA2A10B, C |

TRANSISTOR AND INTEGRATED CIRCUIT PART NUMBERS

| REFERENCE DESIGNATION | PART NUMBER |
|---|---|
| U1 | 1820-1197 |
| U2 | 1820-1206 |
| U3 | 08673-80001 |
| U4 | 1820-1759 |
| U5 | 1818-0498 |
| U6 | 1818-1788 |
| U7 | 1820-1216 |
| U8 | 1820-2075 |

INTEGRATED CIRCUIT VOLTAGE AND GROUND CONNECTIONS

| REFERENCE DESIGNATION | PIN NUMBER |
|---|---|
| U1, 2 | +5V - 14<br>▽ - 7 |
| U3, 4, 8 | +5V - 20<br>▽ - 10 |
| U5 | +5V -21, 24<br>▽ - 12 |
| U6 | +5V - 24<br>▽ - 12 |
| U7 | +5V - 16<br>▽ - 8 |

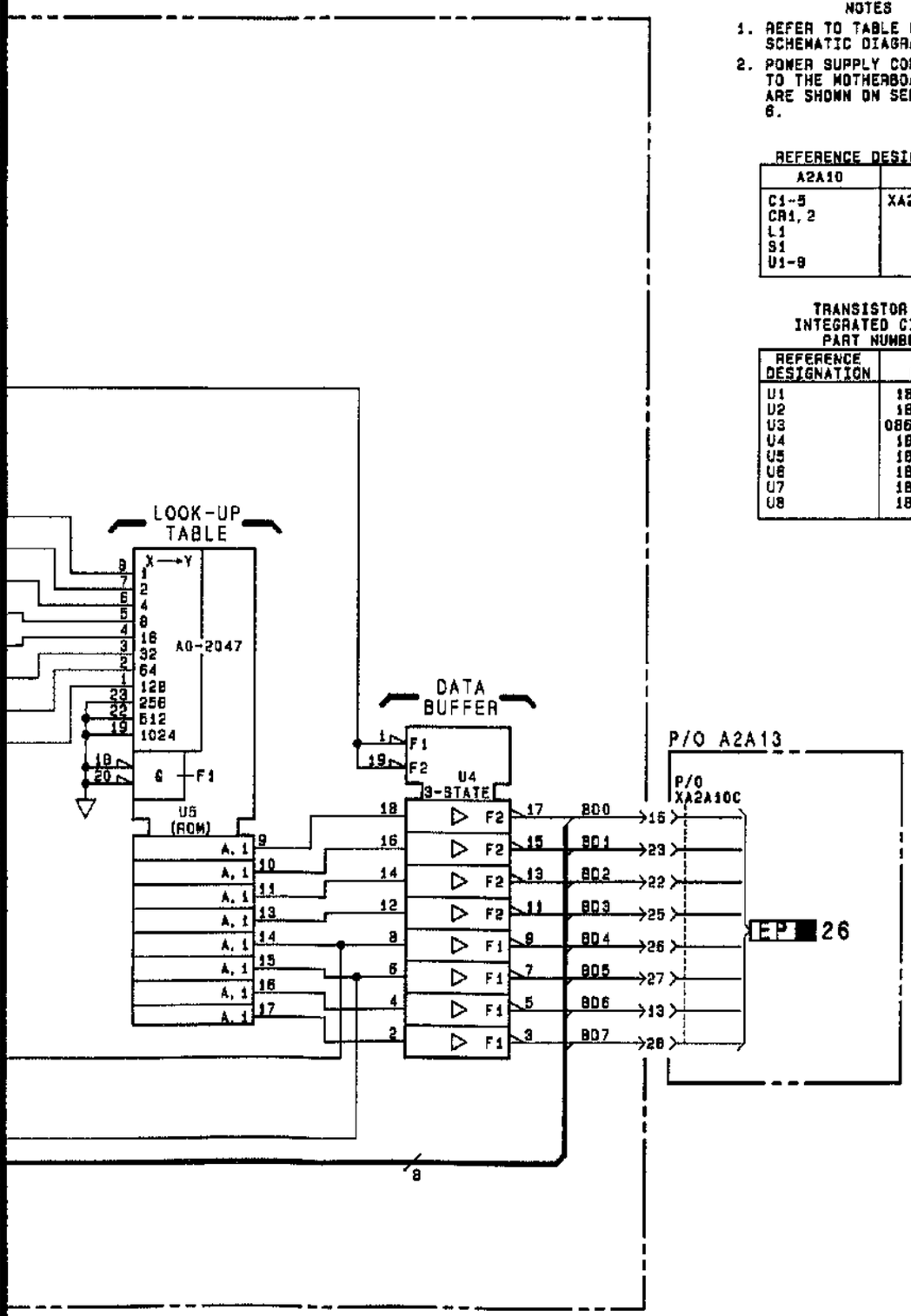


2B
A2A10

Figure 8-261. RAM Assembly Schematic Diagram



www.valuetronics.com

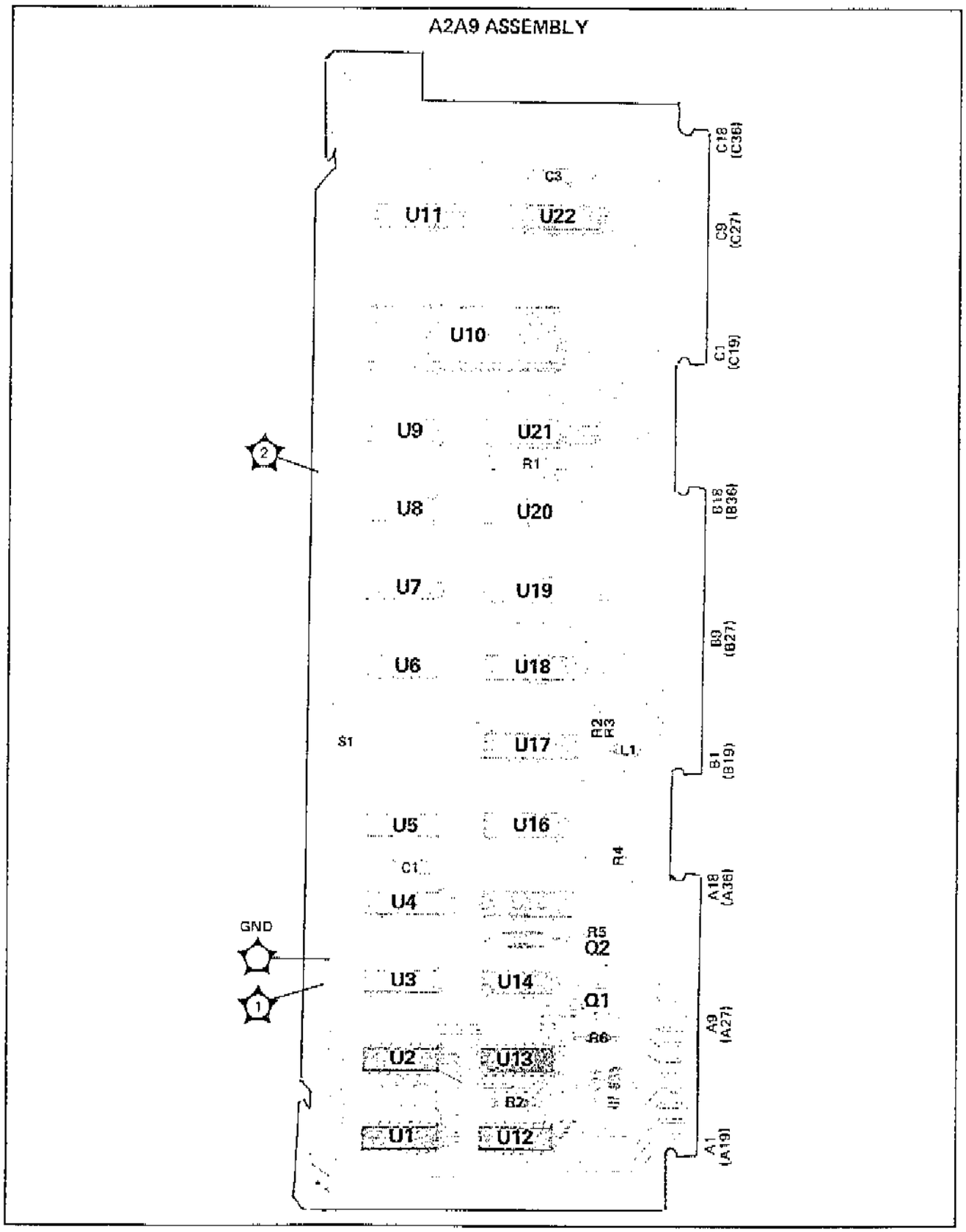


Figure 8-262. A2A9 Frequency Output — HP-IB Assembly Component and Test Point Location

8-261a

www.valuetronics.com

FIG. 8-263
Sht 1 of 4

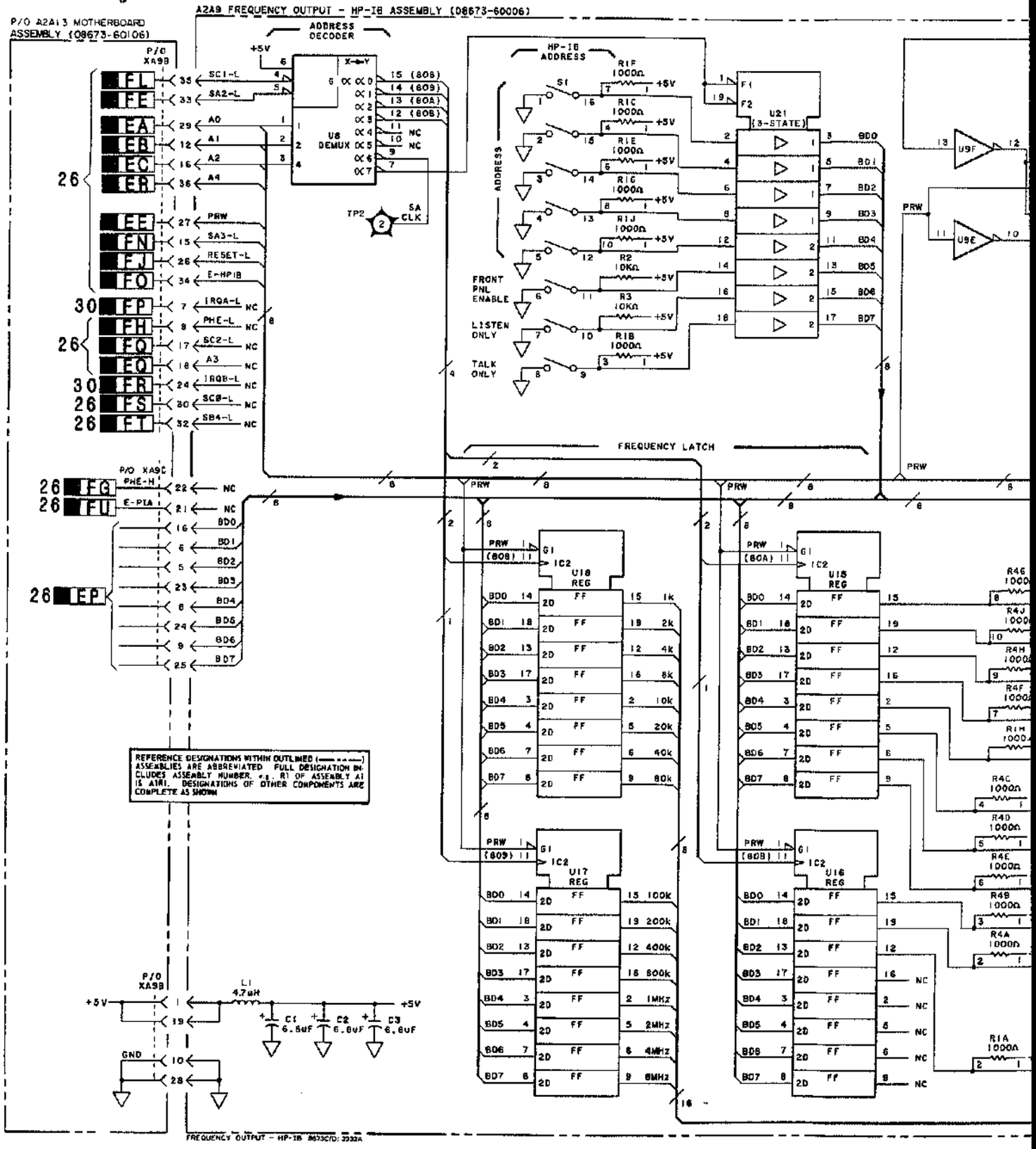


www.valuetronics.com

FIG. 8-263
Sht 2 of 4

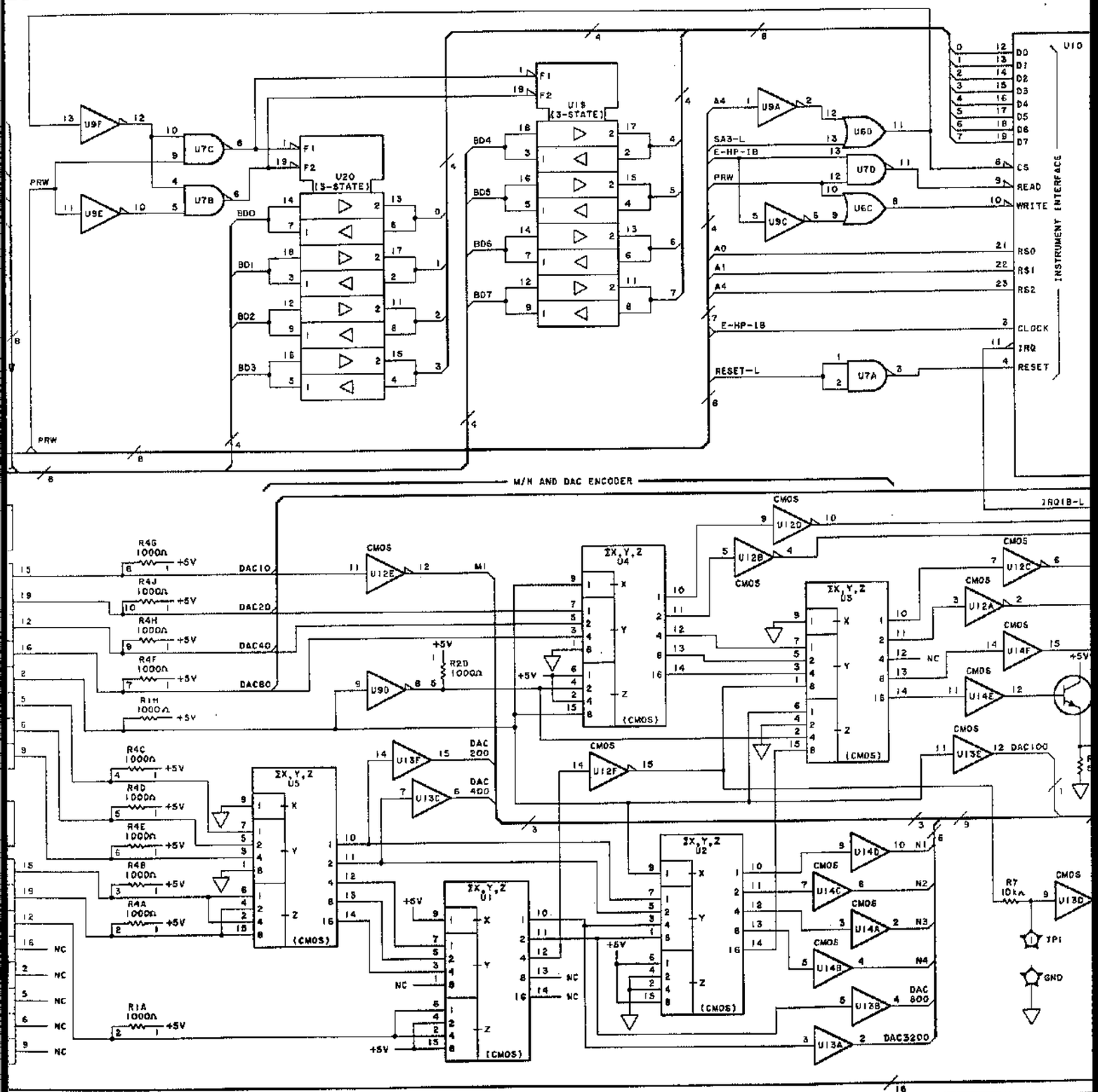


www.valuetronics.com

FIG. 8-263
Sht 3 of 4

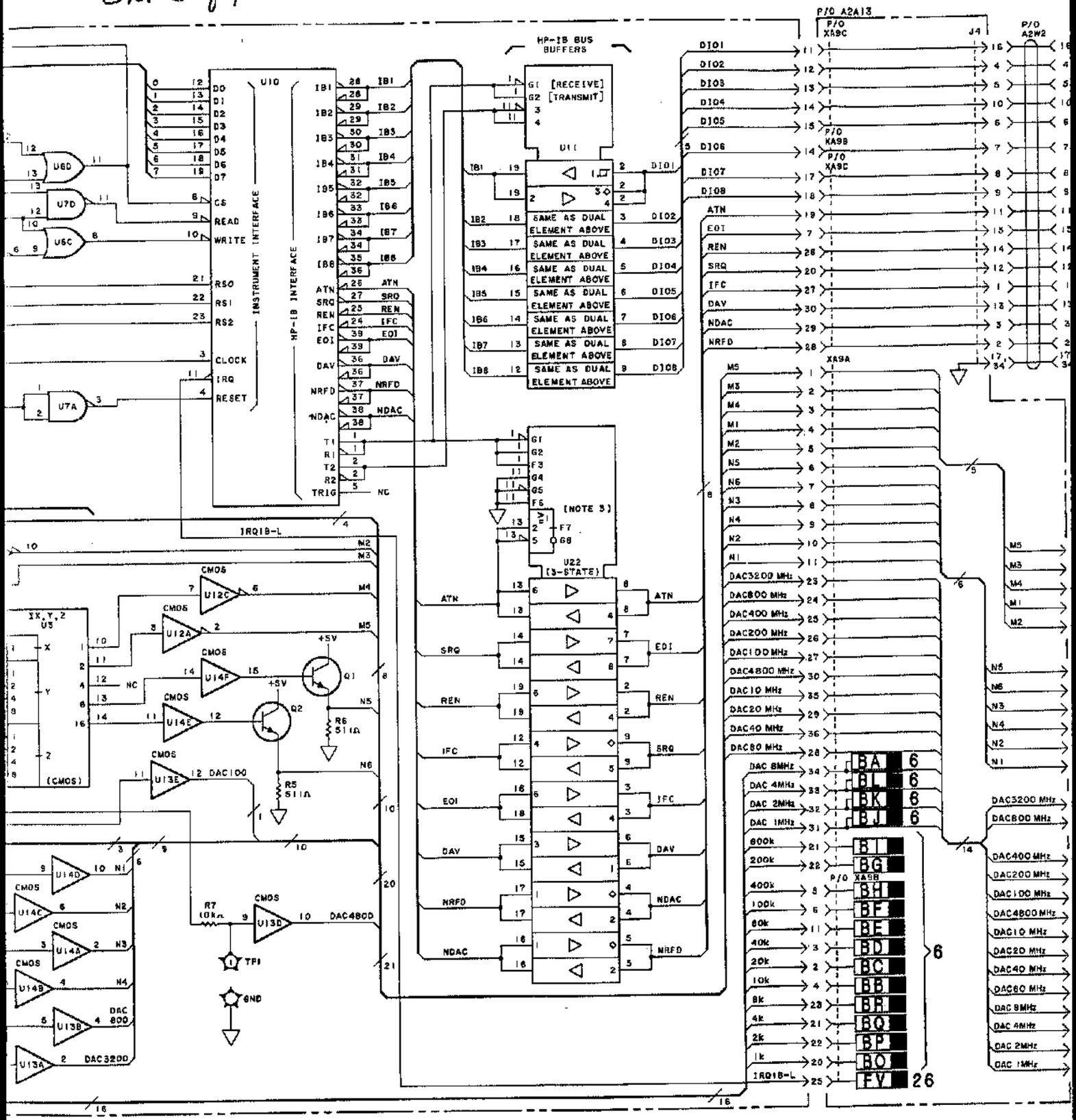


www.valuetronics.com

FIG. 8-263
Sht 4 of 4

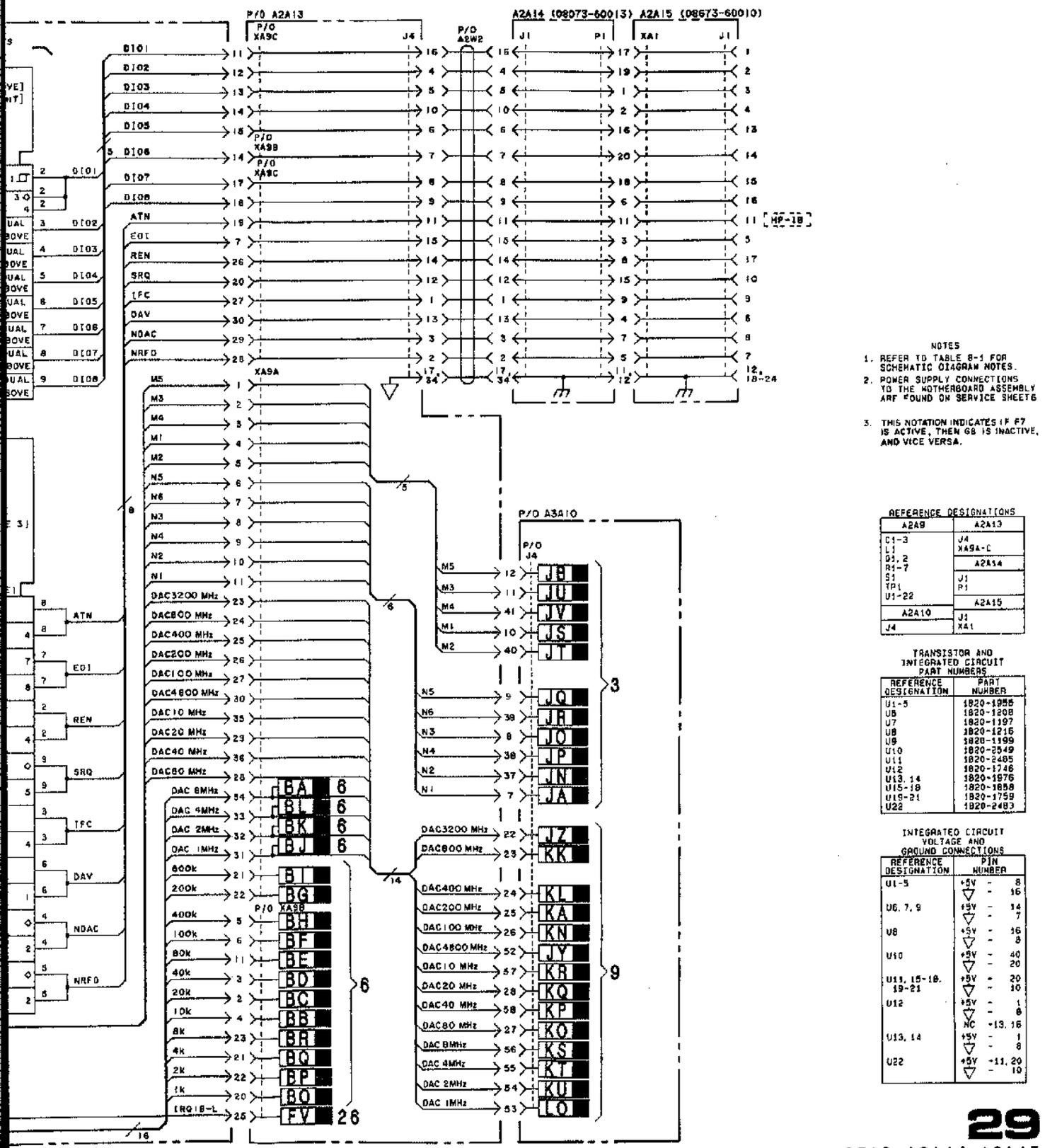


NOTES

1. REFER TO TABLE 8-1 FOR SCHEMATIC DIAGRAM NOTES.
2. POWER SUPPLY CONNECTIONS TO THE MOTHERBOARD ASSEMBLY ARE FOUND ON SERVICE SHEET 6
3. THIS NOTATION INDICATES IF F7 IS ACTIVE, THEN G8 IS INACTIVE, AND VICE VERSA.

REFERENCE DESIGNATIONS

| A2A9 | A2A13 |
|---|---|
| C1-3<br>L1<br>Q1, 2<br>R1-7<br>S1<br>TP1<br>U1-22 | J4<br>XA9A-C |
| A2A10 | A2A14 |
| J4 | J1<br>P1 |
| | A2A15 |
| | J1<br>XA1 |

TRANSISTOR AND INTEGRATED CIRCUIT PART NUMBERS

| REFERENCE DESIGNATION | PART NUMBER |
|---|---|
| U1-5 | 1820-1955 |
| U6 | 1820-1208 |
| U7 | 1820-1197 |
| U8 | 1820-1215 |
| U9 | 1820-1199 |
| U10 | 1820-2549 |
| U11 | 1820-2485 |
| U12 | 1820-1746 |
| U13, 14 | 1820-1976 |
| U15-18 | 1820-1858 |
| U19-21 | 1820-1759 |
| U22 | 1820-2483 |

INTEGRATED CIRCUIT VOLTAGE AND GROUND CONNECTIONS

| REFERENCE DESIGNATION | PIN NUMBER |
|---|---|
| U1-5 | +5V - 8<br>▽ - 16 |
| U6, 7, 9 | +5V - 14<br>▽ - 7 |
| U8 | +5V - 16<br>▽ - 8 |
| U10 | +5V - 40<br>▽ - 20 |
| U11, 15-18, 19-21 | +5V - 20<br>▽ - 10 |
| U12 | +5V - 1<br>▽ - 8<br>NC - 13, 16 |
| U13, 14 | +5V - 1<br>▽ - 8 |
| U22 | +5V - 11, 20<br>▽ - 10 |



Figure 8-263. Frequency Output—HP-IB Assembly Schematic Diagram



www.valuetronics.com

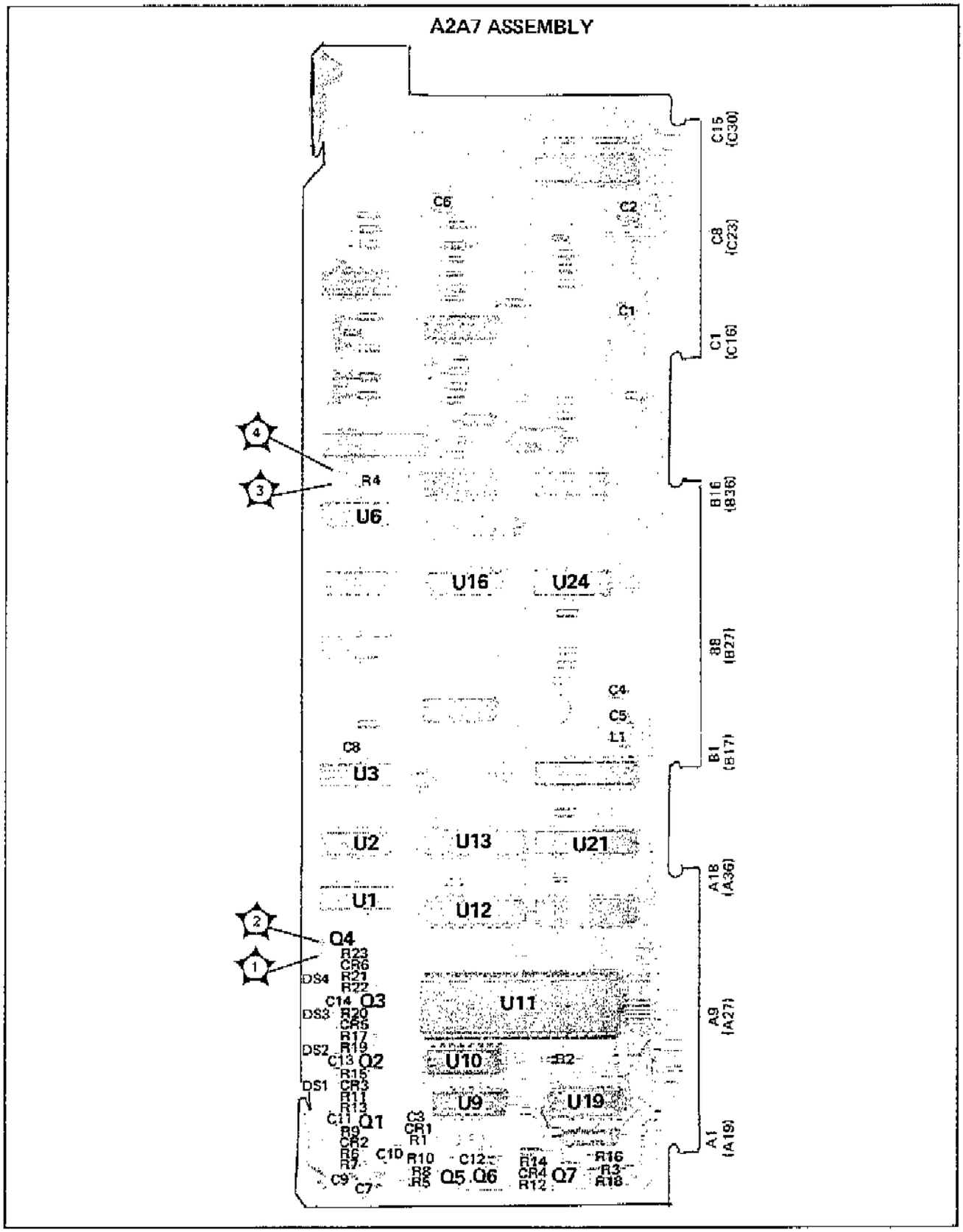


Figure 8-264. A2A7 I/O Assembly Component and Test Point Location, Part 1

8-263a

www.valuetronics.com

FIG. 8-265
Sht 1 of 3

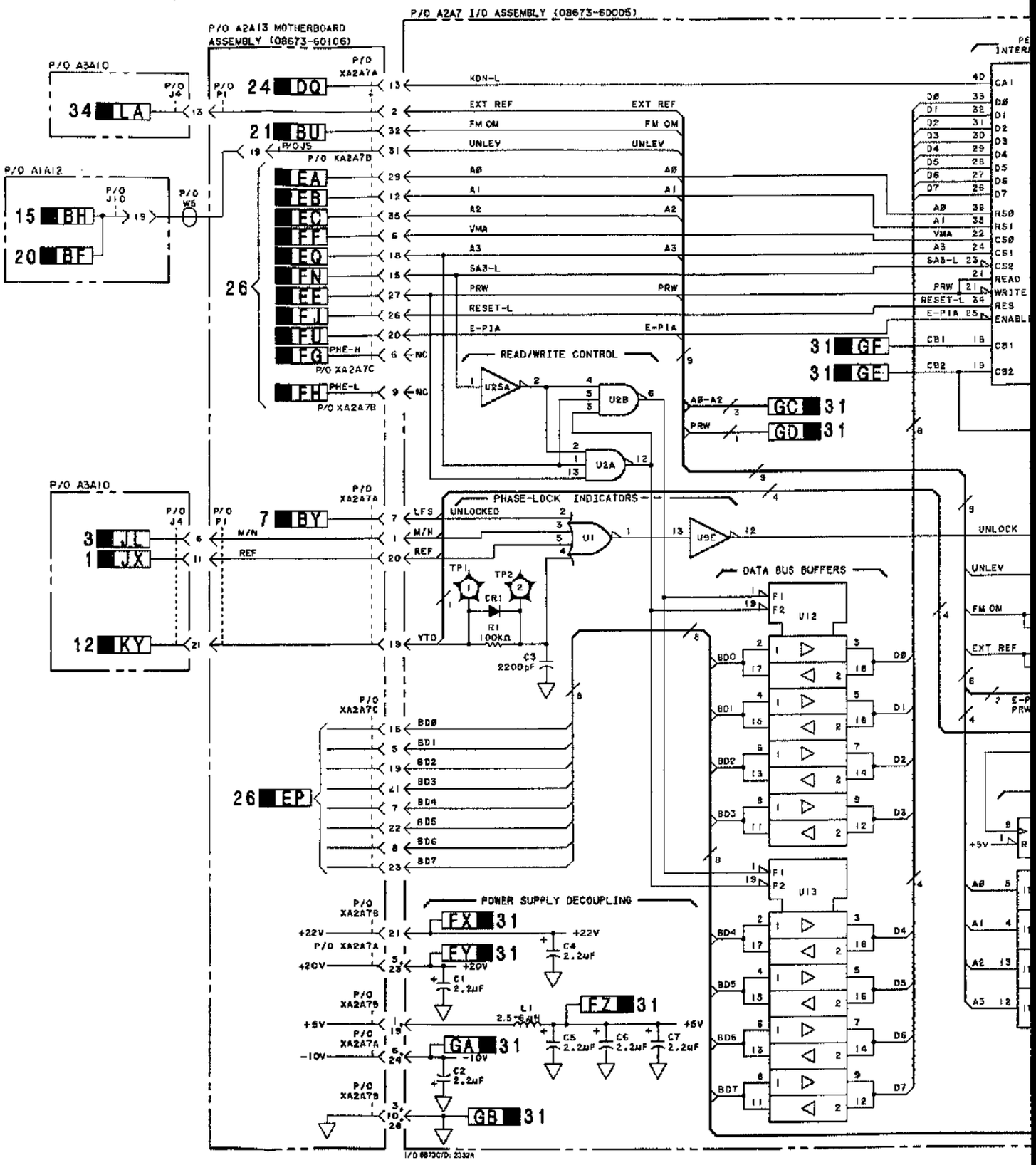


www.valuetronics.com

FIG. 8-265
Sht 2 of 3

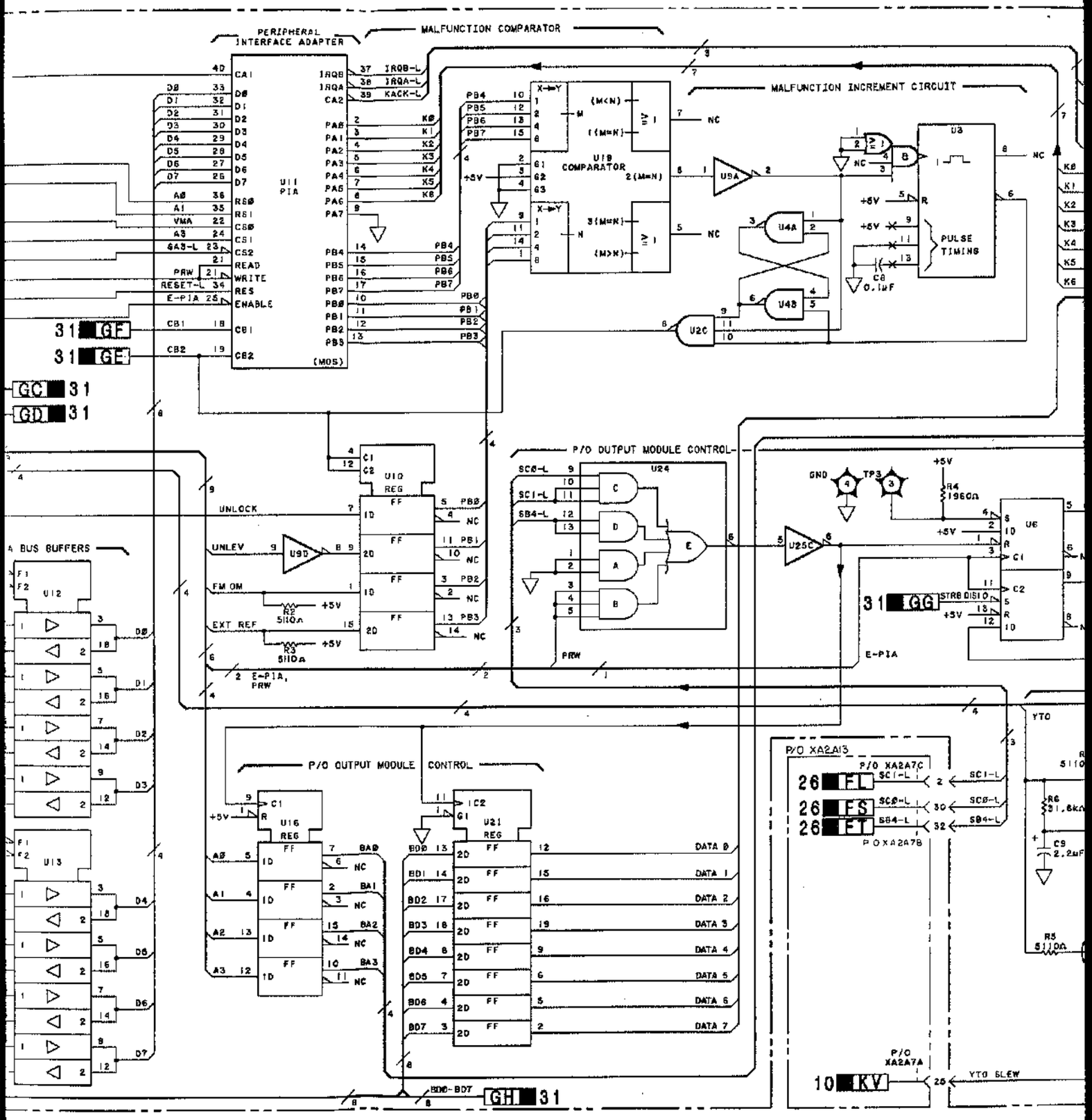


www.valuetronics.com

FIG. 8-265
Sht 3 of 3

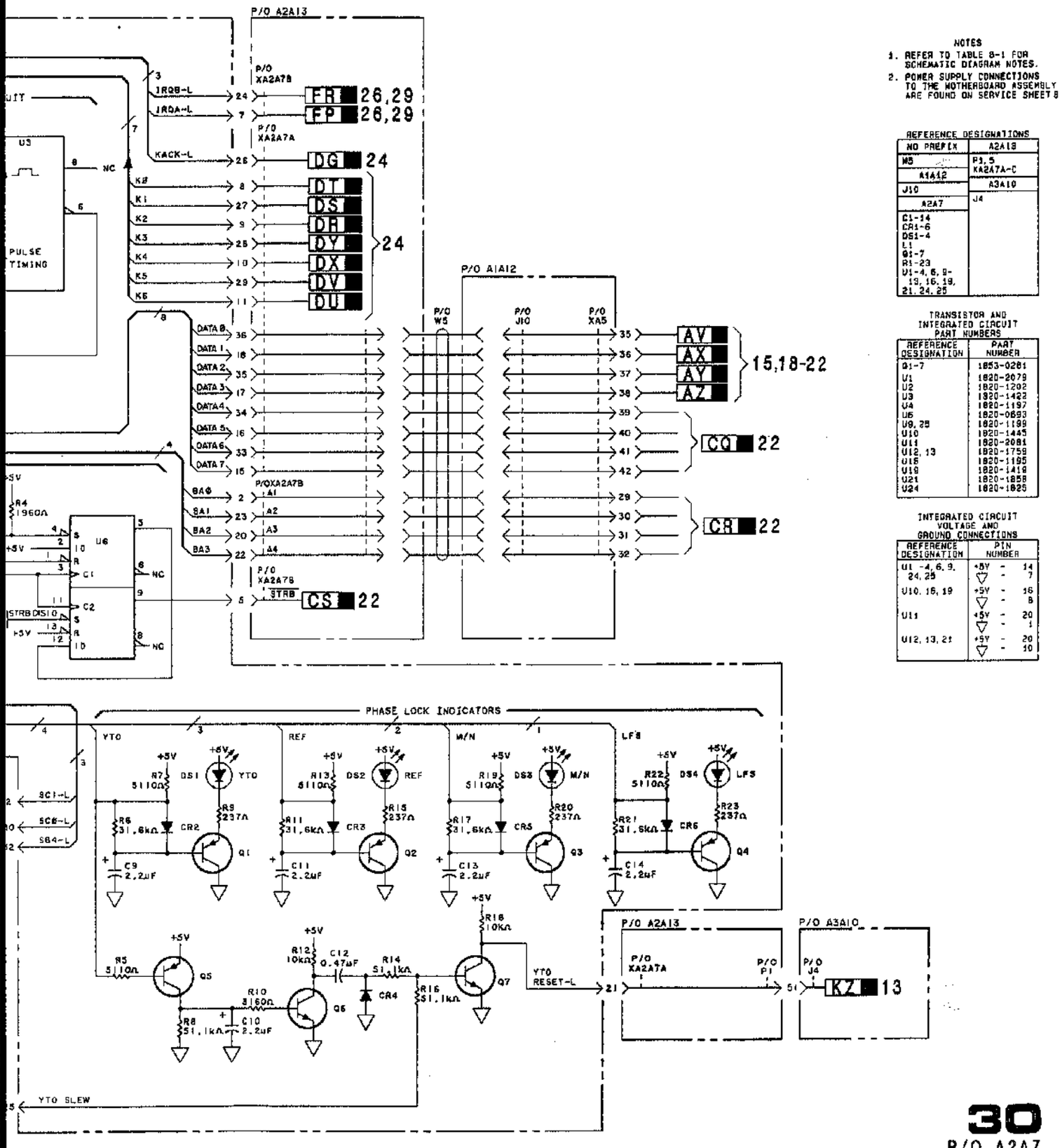


NOTES
1. REFER TO TABLE 8-1 FOR SCHEMATIC DIAGRAM NOTES.
2. POWER SUPPLY CONNECTIONS TO THE MOTHERBOARD ASSEMBLY ARE FOUND ON SERVICE SHEET 8

REFERENCE DESIGNATIONS

| NO PREFIX | A2A13 |
|---|---|
| MS | P3,5 |
| A1A12 | XA2A7A-C |
| J10 | A3A10 |
| A2A7 | J4 |
| C1-14<br>CR1-6<br>DS1-4<br>L1<br>Q1-7<br>R1-23<br>U1-4, 6, 9-13, 16, 19, 21, 24, 25 | |

TRANSISTOR AND INTEGRATED CIRCUIT PART NUMBERS

| REFERENCE DESIGNATION | PART NUMBER |
|---|---|
| Q1-7 | 1853-0281 |
| U1 | 1820-2079 |
| U2 | 1820-1202 |
| U3 | 1820-1422 |
| U4 | 1820-1197 |
| U6 | 1820-0693 |
| U9, 25 | 1820-1199 |
| U10 | 1820-1445 |
| U11 | 1820-2081 |
| U12, 13 | 1820-1759 |
| U15 | 1820-1195 |
| U19 | 1820-1419 |
| U21 | 1820-1858 |
| U24 | 1820-1825 |

INTEGRATED CIRCUIT VOLTAGE AND GROUND CONNECTIONS

| REFERENCE DESIGNATION | PIN NUMBER |
|---|---|
| U1-4, 6, 9, 24, 25 | +5V - 14<br>▽ - 7 |
| U10, 16, 19 | +5V - 16<br>▽ - 8 |
| U11 | +5V - 20<br>▽ - 1 |
| U12, 13, 21 | +5V - 20<br>▽ - 10 |

30
P/O A2A7

Figure 8-265. I/O Assembly Schematic Diagram, Part 1



www.valuetronics.com

Service Sht's 31-40

## Assemblies vs. Service Sheet List

| Assembly | Description | Ser.Sheet |
|---|---|---|
| A1A1 | Attenuator Driver Board Assembly | 18 |
| A1A2 | Detector Module Assembly | 14,17 |
| A1A2A1 | ALC Board Assembly | 14,17 |
| A1A2A2 | Detector Board Assembly | 17 |
| A1A3 | Function Board Assembly | 20 |
| A1A4 | Pulse Driver Board Assembly | 15 |
| A1A5 | DAC and Enable Board Assembly | 22 |
| A1A6 | Meter Board Assembly | 20,40 |
| A1A7 | YTM Driver Board Assembly | 16 |
| A1A8 | SRD Bias Board Assembly | 19 |
| A1A9 | Preamp Assembly | 14,16 |
| A1A10 | YTM Assembly | 16 |
| A1A10A1 | YIG Heater Control Assembly | 16 |
| A1A11 | Power Amplifier Assembly | 16 |
| A1A12 | Motherboard Assembly | 14-16,18-22, 30,31,40 |
| A1A13 | Terminal Strip | 37 |
| A1A14 | Amp Bias Board Assembly | 17 |
| A2A1 | Panel Driver Board Assembly | 25 |
| A2A2 | Key Code Board Assembly | 24 |
| A2A3 | VCO Assembly | 8 |
| A2A4 | Phase Detector Assembly | 7 |
| A2A5 | Divider Assembly 20/30 | 6 |
| A2A6 | Not Assigned | |
| A2A7 | I/O Board Assembly | 30,31 |
| A2A8 | Microprocessor Board Assembly | 26 |
| A2A9 | Frequency/HP-IB Board Assembly | 29 |
| A2A10 | RAM Board Assembly | 28 |
| A2A11 | ROM Board Assembly | 27 |
| A2A13 | Motherboard Assembly | 6-8,10, 20-32 |
| A2A14 | Rear Interconnect Board Assembly | 24,29, 31 |
| A2A15 | HP-IB Connector Board Assembly | 29 |
| A3A1 | Rectifier Assembly | 33 |
| A3A1A1 | Reference Phase Detector Assembly | 1,2 |
| A3A1A2 | 100 MHz VCXO Assembly | 2 |
| A3A1A3 | M/N Phase Detector Assembly | 3 |
| A3A1A4 | M/N VCO Assembly | 4 |
| A3A1A4A1 | VCO Resonator | 4 |
| A3A1A4A2 | VCO Board Assembly | 4 |
| A3A1A5 | M/N Output Assembly | 5 |
| A3A1A6 | M/N Reference Motherboard Assembly | 1-3,5 |
| A3A1A7 | Reference Housing Assembly | |
| A3A2 | Not Assigned | |
| A3A3 | Positive Regulator Assembly | 34 |
| A3A4 | Negative Regulator Assembly | 35 |
| A3A5 | DAC Assembly | 9 |
| A3A6 | YTO Driver Assembly | 10 |
| A3A7 | FM Driver Assembly | 13 |
| A3A8 | 10 MHz Reference Oscillator | 1 |
| A3A9 | YTO Loop Assembly | 11,12 |
| A3A9A1 | Directional Coupler Assembly | 13 |
| A3A9A2 | YTO Interconnect Assembly | 11-13 |
| A3A9A3 | 2.0 - 6.6 GHz YTO Assembly | 13 |
| A3A9A4 | YTO Phase Detector Assembly | 12 |
| A3A9A5 | Sampler Assembly | 11 |
| A3A9A6 | Attenuator Assembly | 13 |
| A3A9A7 | 6.2 GHz Low Pass Filter | 13 |
| A3A10 | Motherboard Assembly | 1,3,6,10, 12-14,21-23 26, 29-31, 33-35 |
| A4A1 | Front Panel Board Assembly | 20,22, 23,32,40 |
| A5A1 | Front Panel Board Assembly | 41,42,44 |
| A5A2 | Detector Module Assembly | 36,39 |
| A5A2A1 | ALC Board Assembly | 36,39 |
| A5A2A2 | Detector Board Assembly | 39 |
| A5A3 | Function Board Assembly | 42 |
| A5A4 | Pulse Driver Board Assembly | 37 |
| A5A5 | DAC and Enable Board Assembly | 44 |
| A5A6 | Switch Driver Board Assembly | 36,41 |
| A5A7 | YTM Driver Board Assembly | 38 |
| A5A8 | Motherboard Assembly | 36-38,40-44, 46,47 |
| A5A9 | Microprocessor Board Assembly | 43 |
| A5A10 | Power Supply Board Assembly | 45-47 |
| A5A11 | Regulator 2 Board Assembly | 46 |
| A5A12 | Regulator 1 Board Assembly | 46,47 |
| A5A13 | Pulse Input Assembly | 37 |
| A5A13A1 | Pulse Input Switch Board Assembly | 37 |

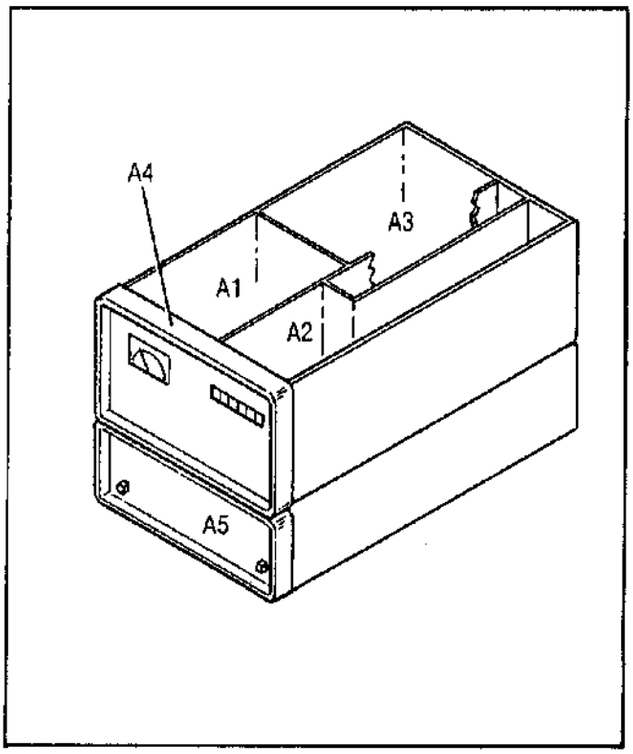


**Major Assemblies**

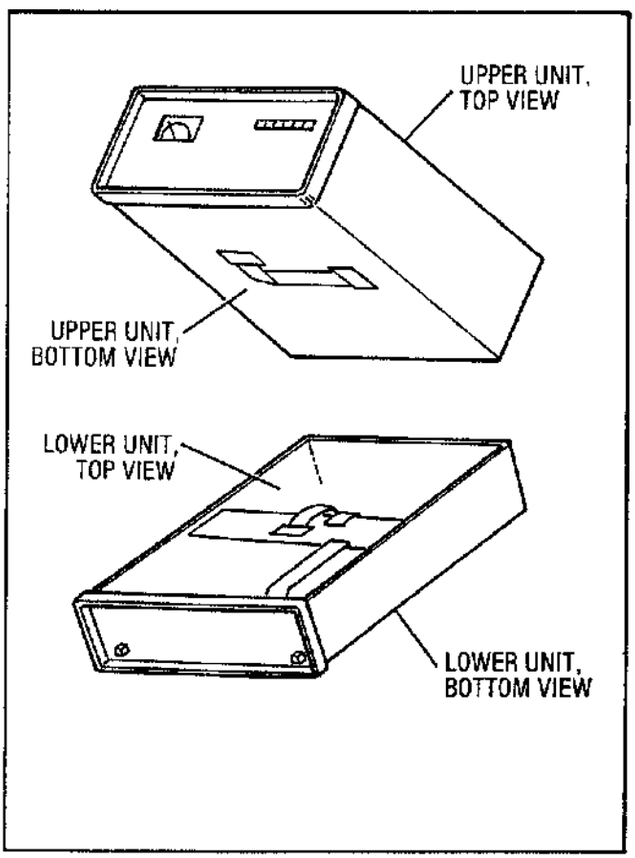


**Internal View Identification**

www.valuetronics.com

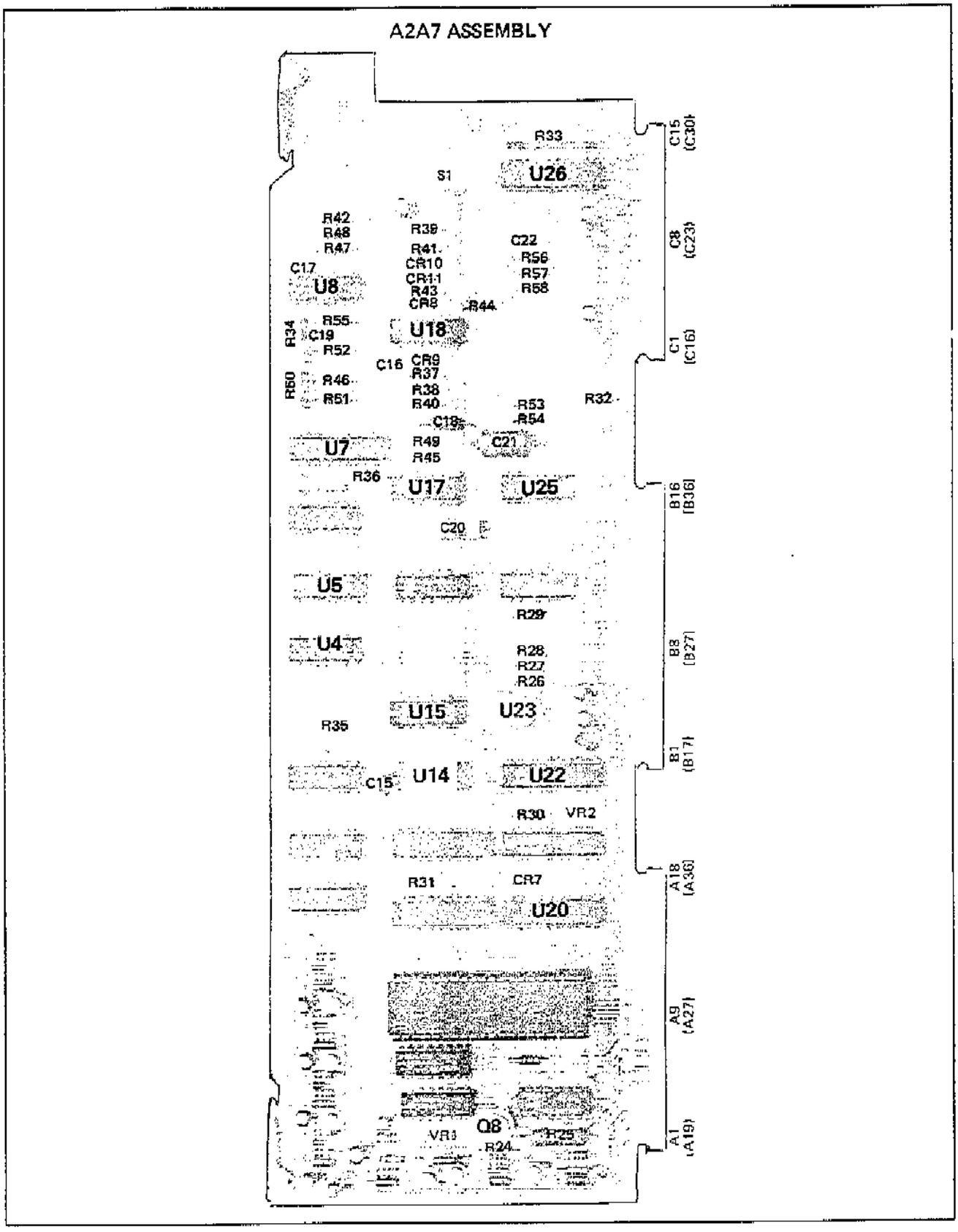


Figure 8-266. A2A7 I/D Assembly Component and Test Point Location, Part 2

8-265a

www.valuetronics.com

FIG. 8-267
Sht 1 of 4

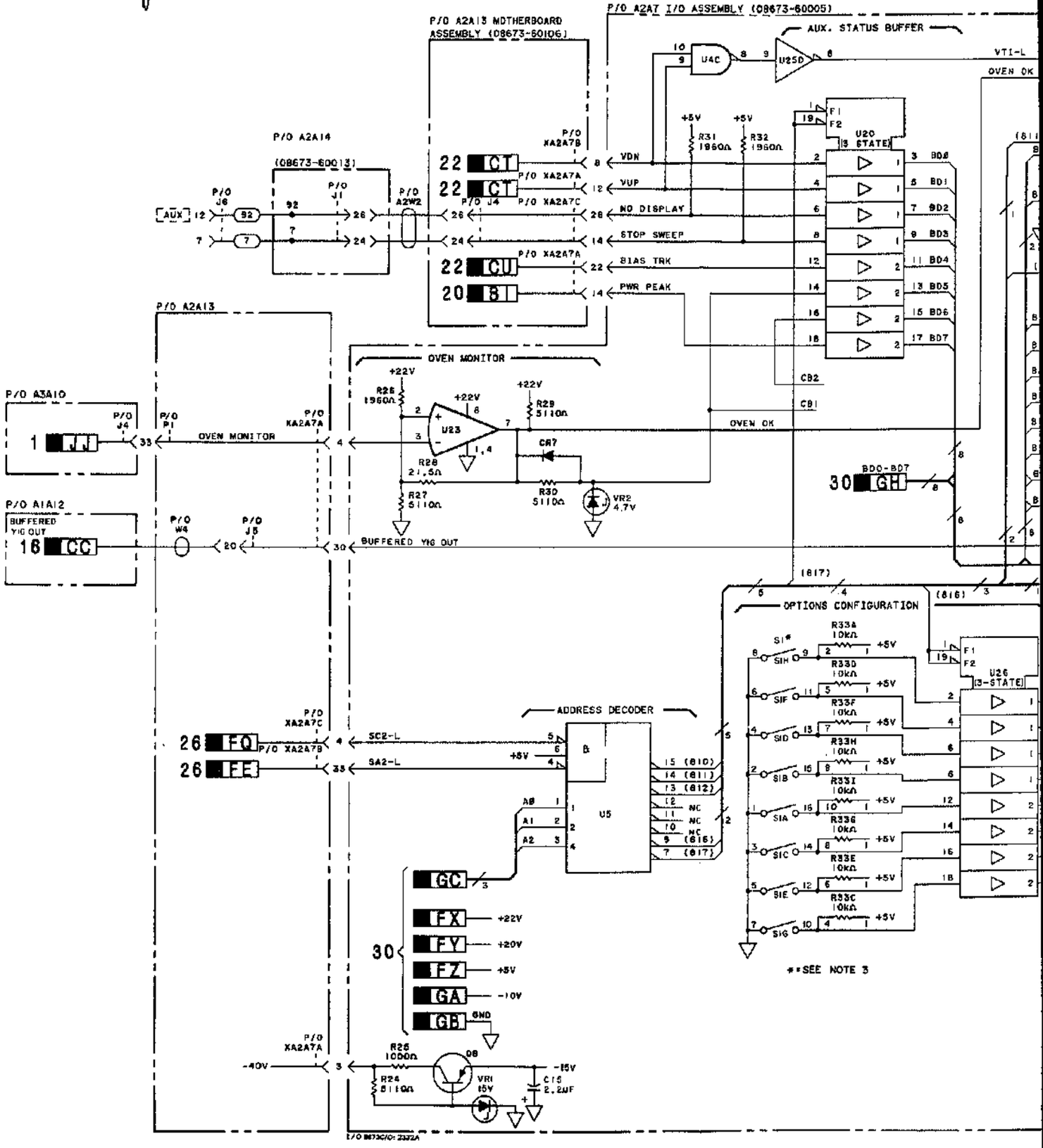


www.valuetronics.com

FIG. 8-267
Sht 2 of 4

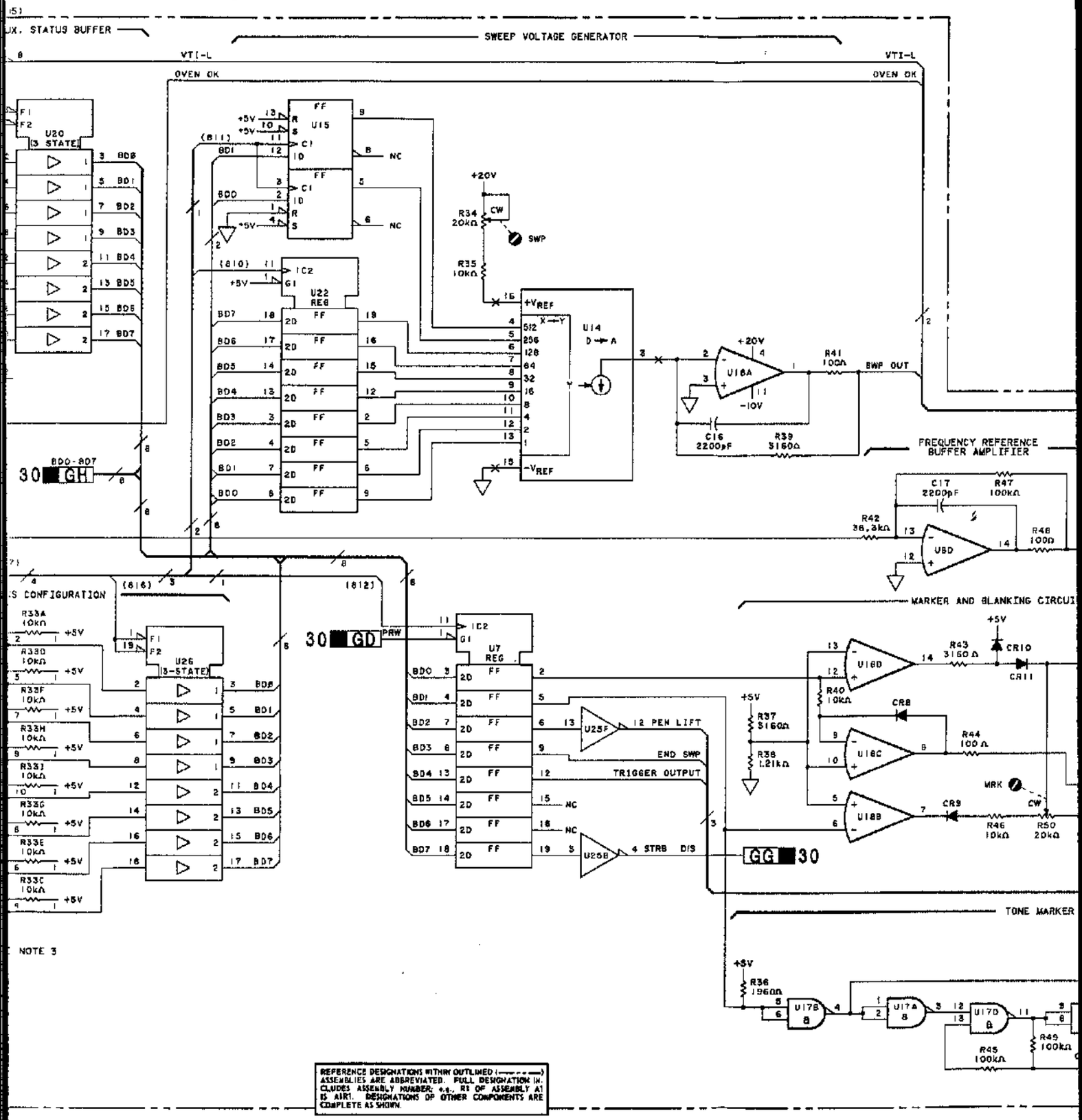


www.valuetronics.com

FIG. 8-267
Sht 3 of 4

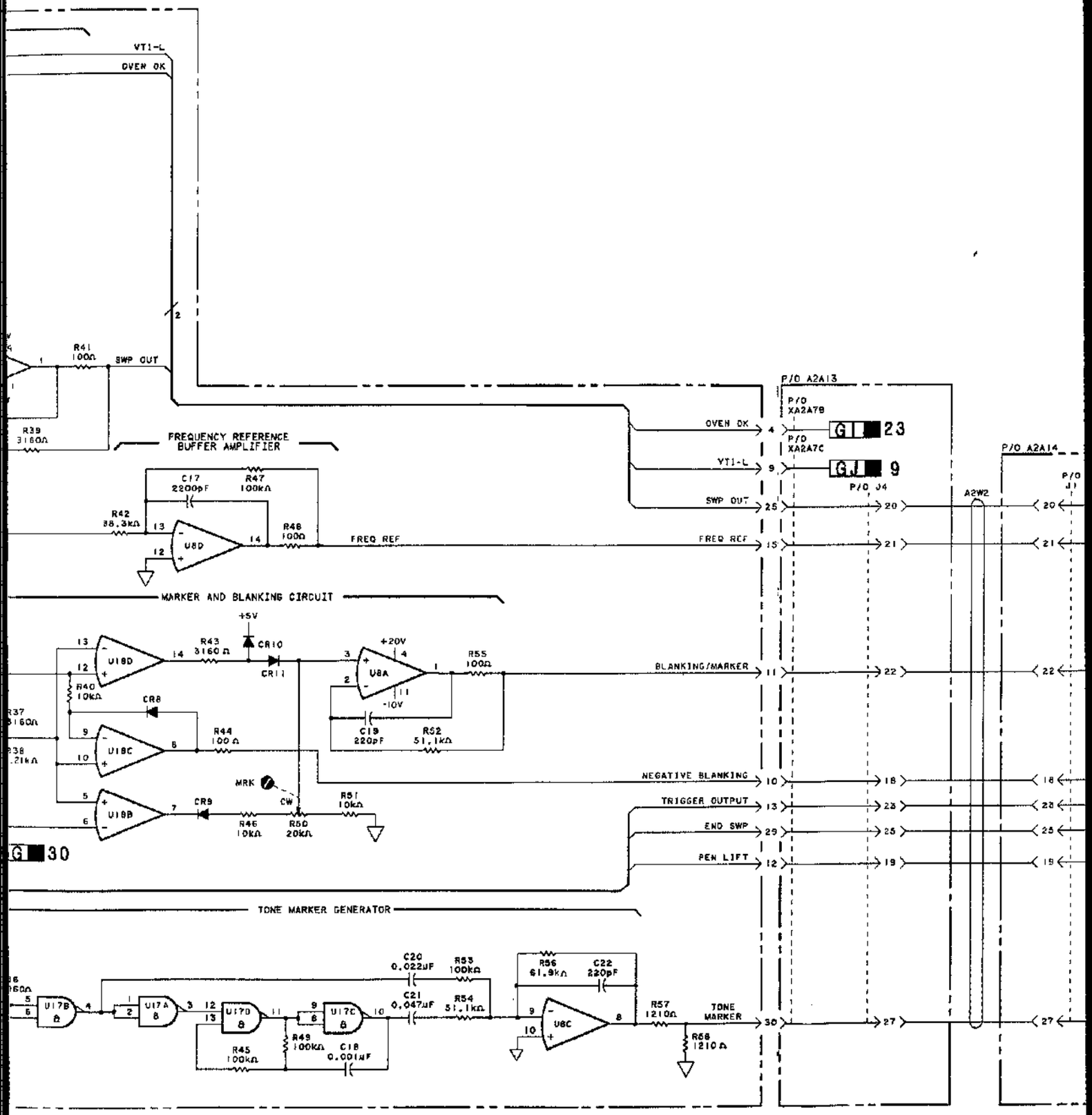


www.valuetronics.com

FIG. 8-267
Sht 4 of 4



NOTES
1. REFER TO TABLE 8-1 FOR SCHEMATIC DIAGRAM NOTES.
2. POWER SUPPLY CONNECTIONS TO THE MOTHERBOARD ASSEMBLY ARE FOUND ON SERVICE SHEET 6
3. ALL SWITCHES OPEN FOR STANDARD VERSION. S1-F CLOSED FOR OPTION 008.

REFERENCE DESIGNATIONS

| NO PREFIX | A2A13 |
|---|---|
| J2-7 | J4, 5 |
| A2 | P1 |
| | W4 |
| X2 | XA2A7A-C |
| A2A7 | A2A14 |
| C15-22 | J1 |
| CR7-11 | |
| Q8 | A3A10 |
| R24-58 | J4 |
| U4, 5, 7, 8, 14, 15, 17, 18, 20, 22, 23, 25, 26 | |

TRANSISTOR AND INTEGRATED CIRCUIT PART NUMBERS

| REFERENCE DESIGNATION | PART NUMBER |
|---|---|
| Q8 | 1853-0314 |
| U4 | 1820-1187 |
| U5 | 1820-1216 |
| U7, 22 | 1820-1858 |
| U8, 18 | 1826-0600 |
| U14 | 1826-0482 |
| U15 | 1820-0683 |
| U17 | 1820-1747 |
| U20, 26 | 1820-1759 |
| U23 | 1826-0026 |
| U25 | 1820-1189 |

INTEGRATED CIRCUIT VOLTAGE AND GROUND CONNECTIONS

| REFERENCE DESIGNATION | PIN NUMBER |
|---|---|
| U4, 15, 17, 25 | +5V - 14<br>▽ - 7 |
| U5 | +5V - 16<br>▽ - 8 |
| U7, 20, 22 | +5V - 20<br>▽ - 10 |
| U14 | +5V 14<br>▽ - 2<br>-15V - 1 |
| U23 | +22V - 8<br>▽ - 1 |

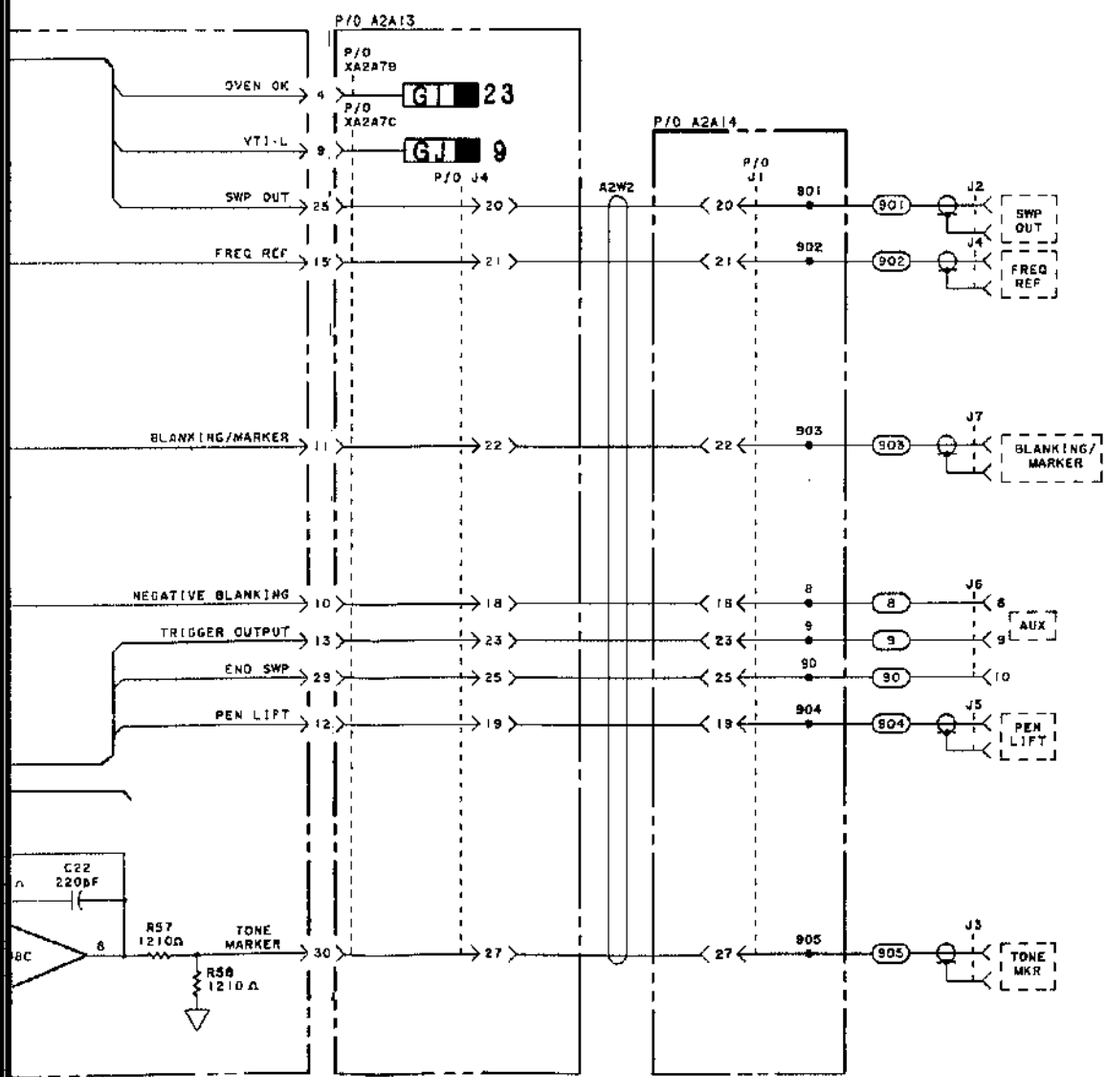


31

P/O A2A7, A2A13, A2A14

Figure 8-267. I/O Assembly Schematic Diagram, Part 2



www.valuetronics.com

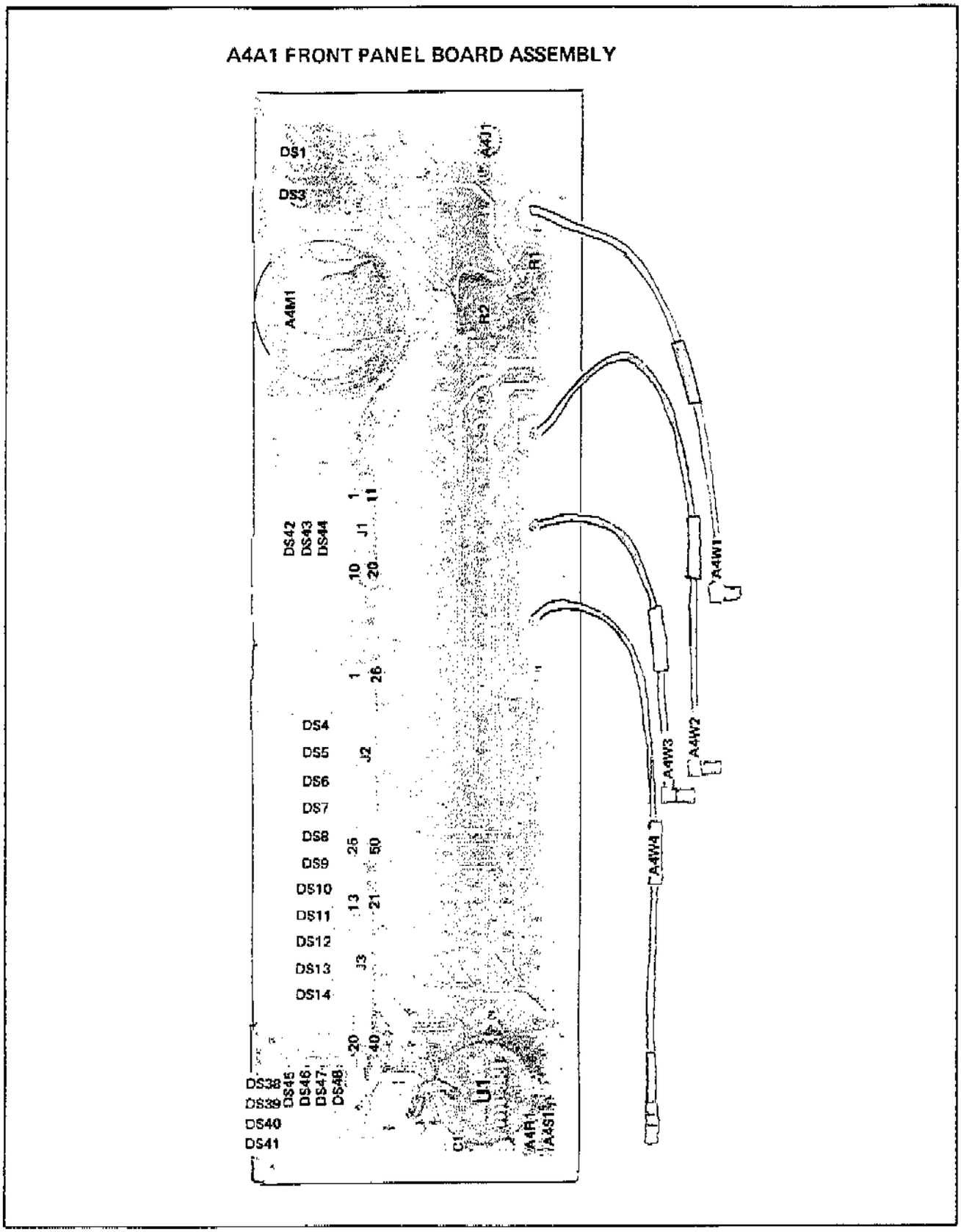


Figure 8-268. A4A1 Front Panel Assembly Component Location

8-267a

www.valuetronics.com

Fig. 8-269
Sht 1 of 4

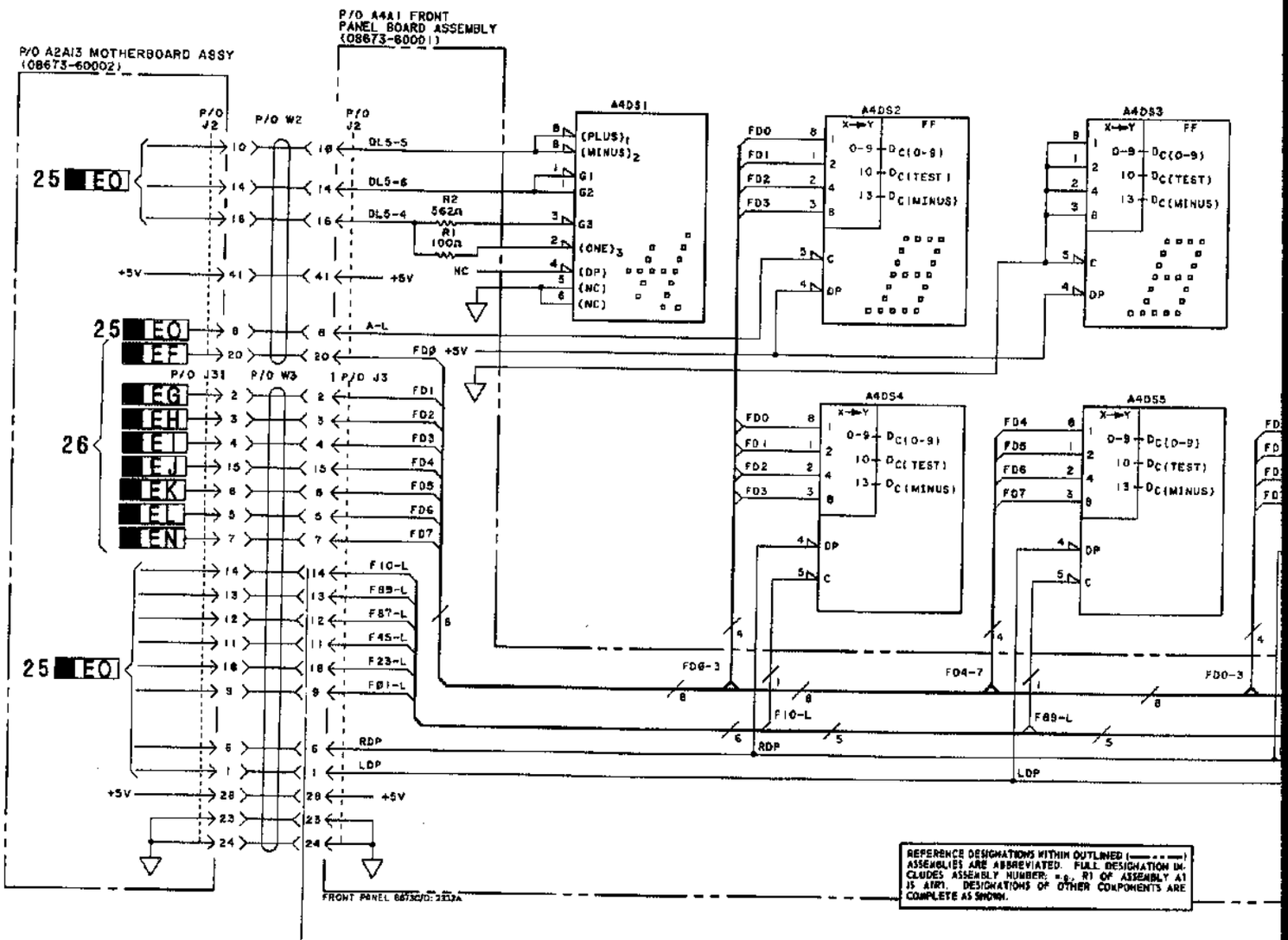


www.valuetronics.com

FIG. 8-269
Sht 2 of 4

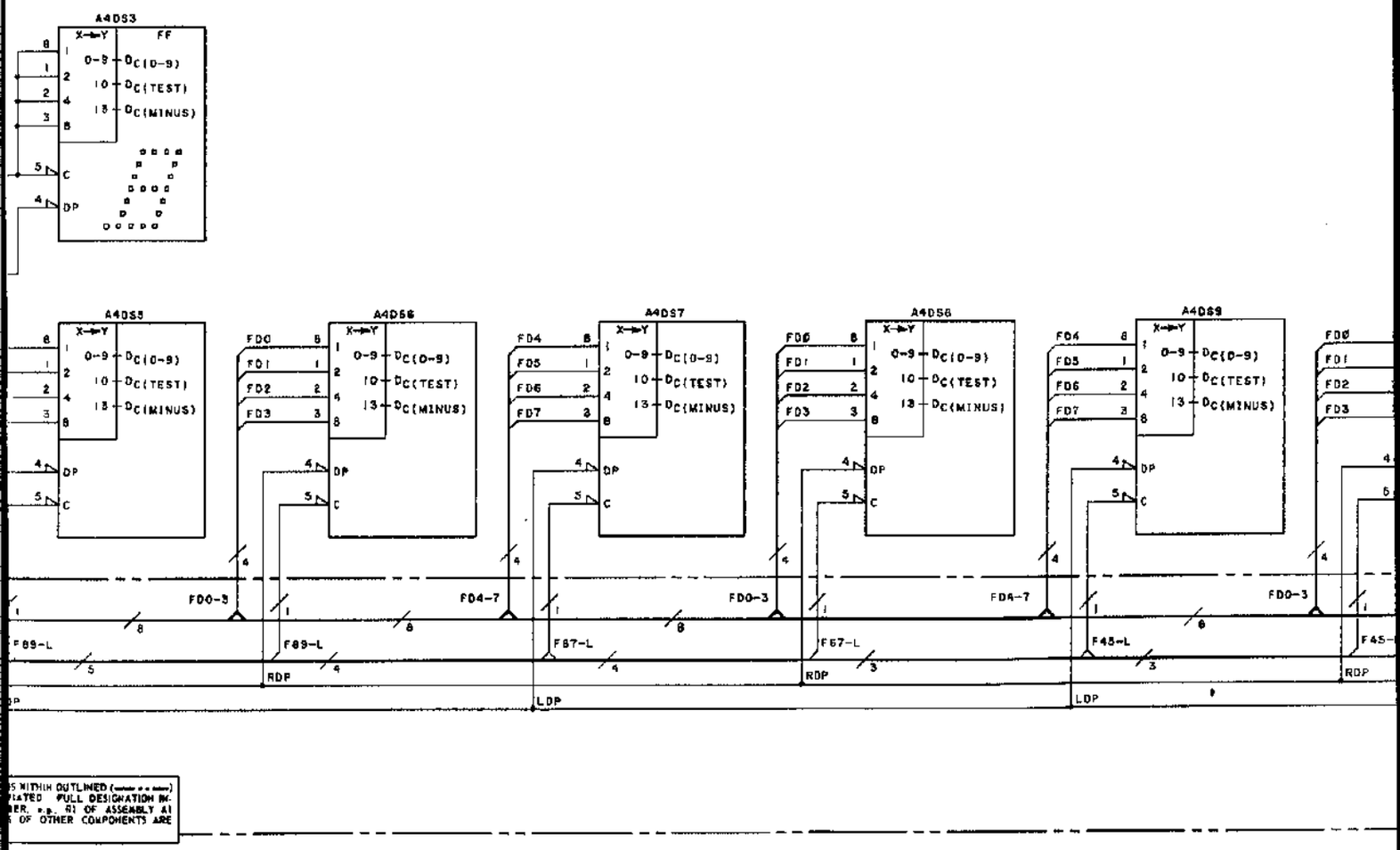


www.valuetronics.com

FIG. 8-269
Sht 3 of 4

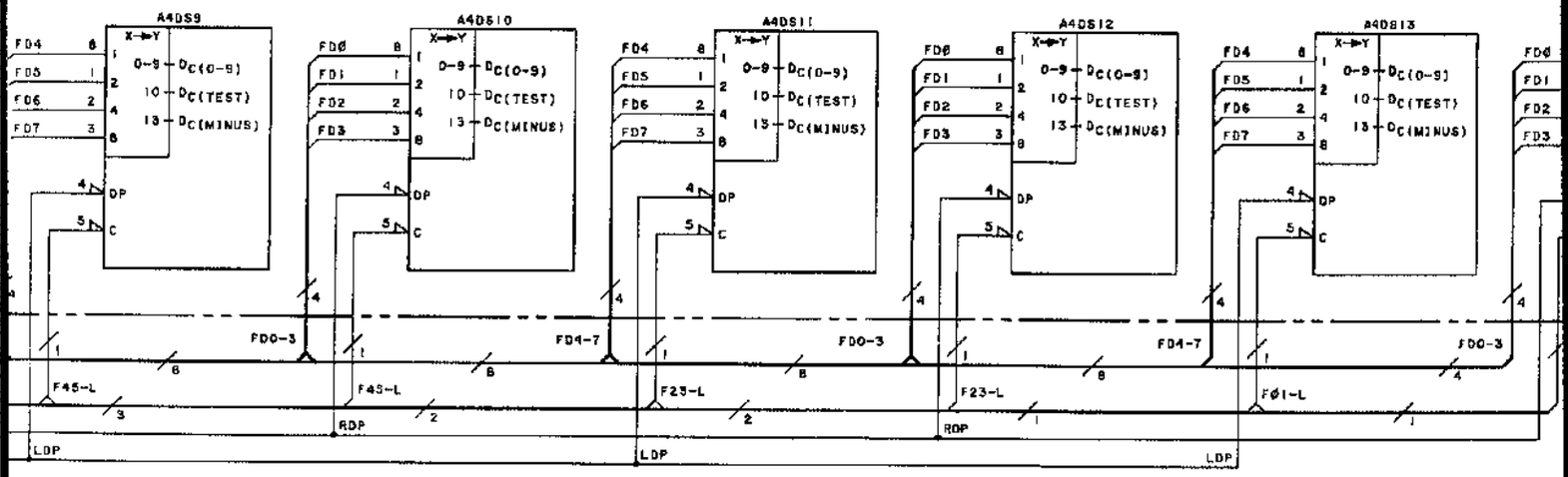


Figure 8-

www.valuetronics.com

FIG. 8-269
Sht 4 of 4



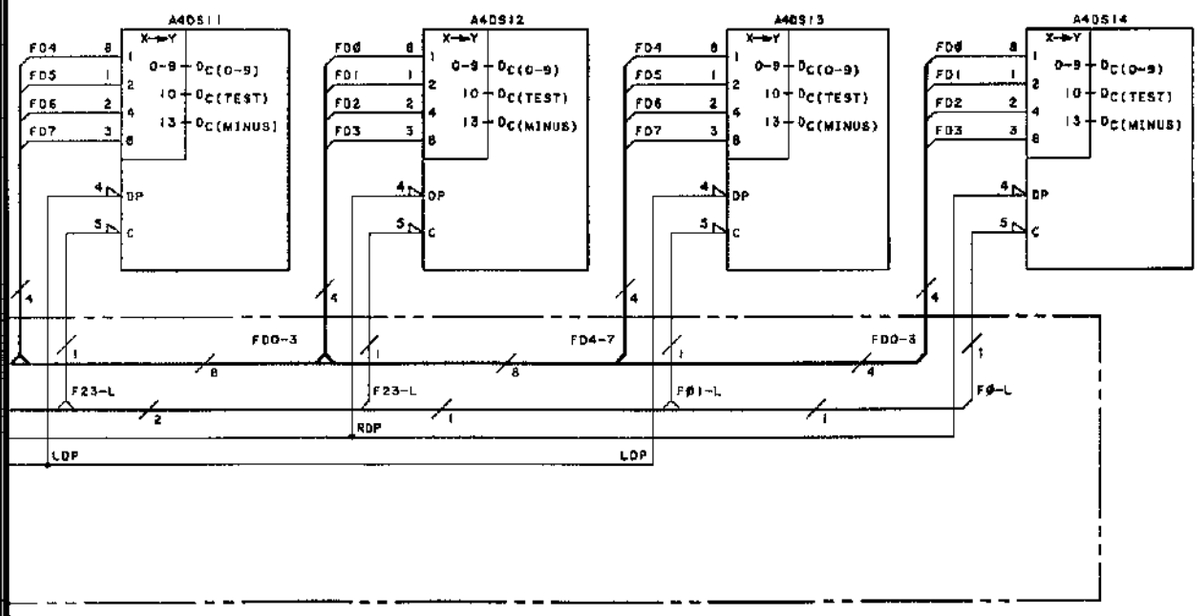


NOTES

1. REFER TO TABLE 8-1 FOR SCHEMATIC DIAGRAM NOTES.

REFERENCE DESIGNATIONS

| NO PREFIX | A4A1 |
|---|---|
| DS1-14 | J2,3<br>R3,4 |
| A2 | |
| J2,3 | |

32
P/O A4A1

Figure 8-269. A4 Front Panel Display Schematic Diagram



www.valuetronics.com

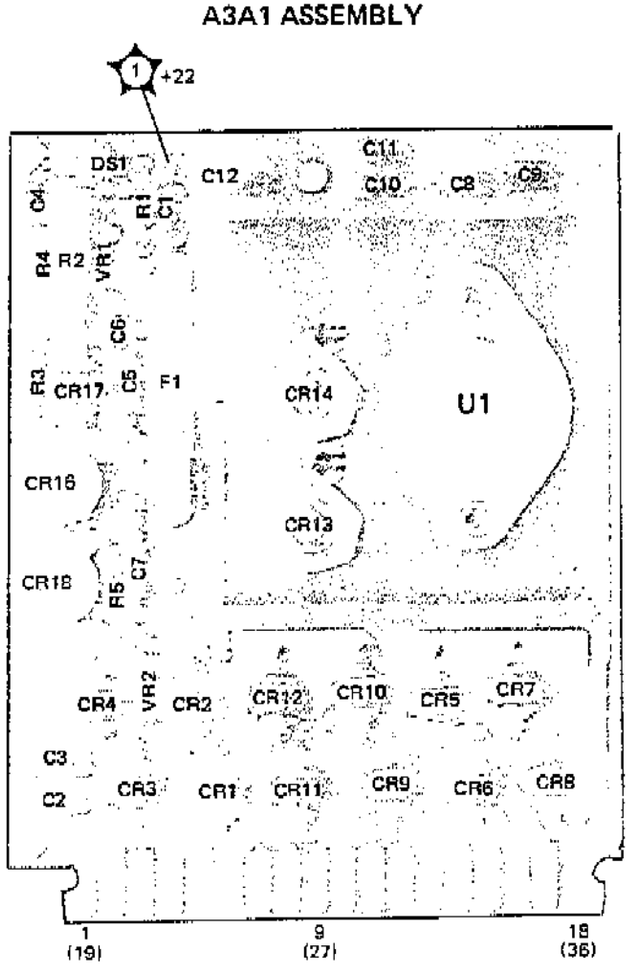


Figure 8-270. A3A1 Rectifier Assembly Component and Test Point Location



www.valuetronics.com

FIG. 8-271
Sht 1 of 3

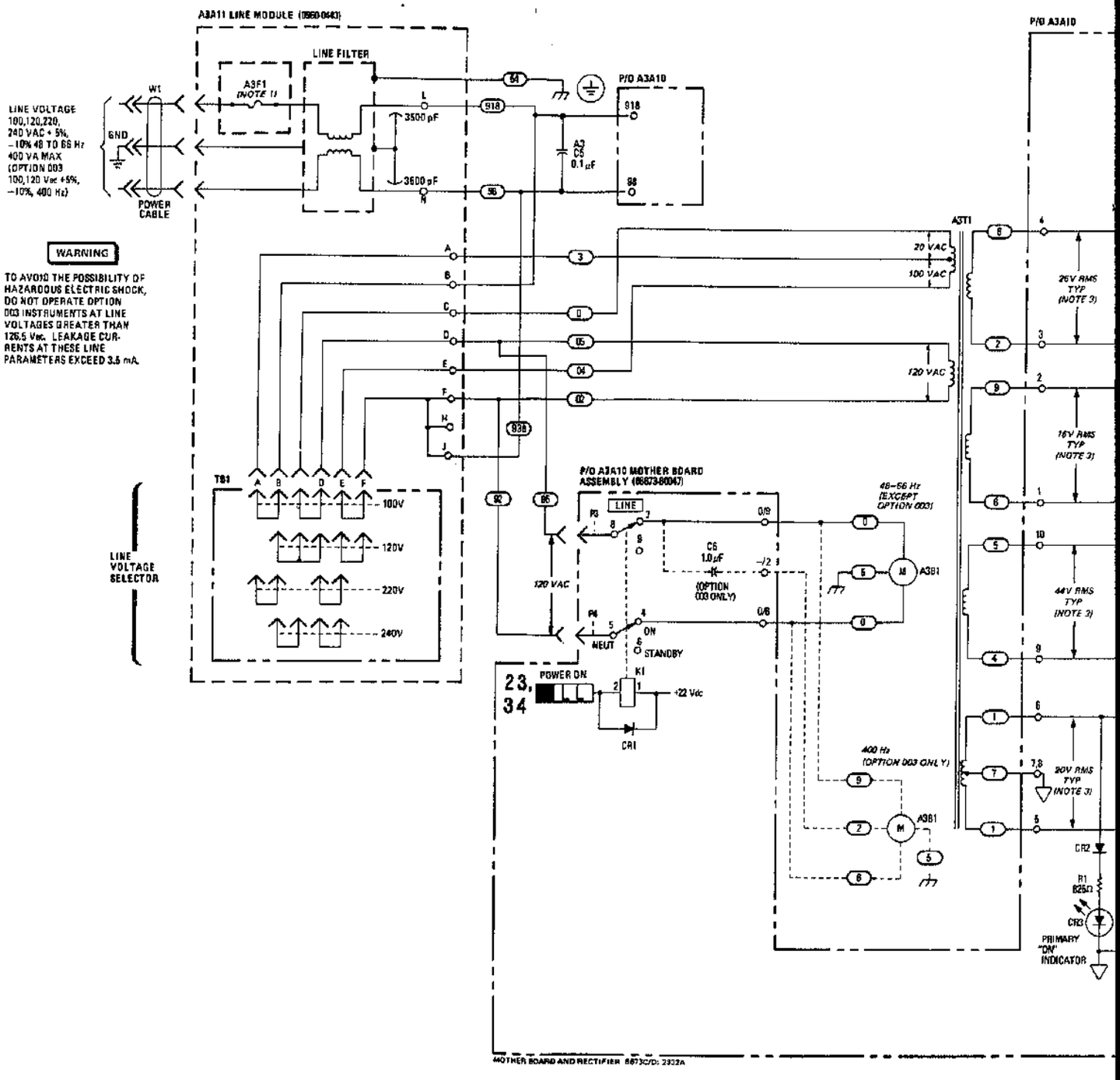


www.valuetronics.com

FIG. 8-271
Sht 2 of 3

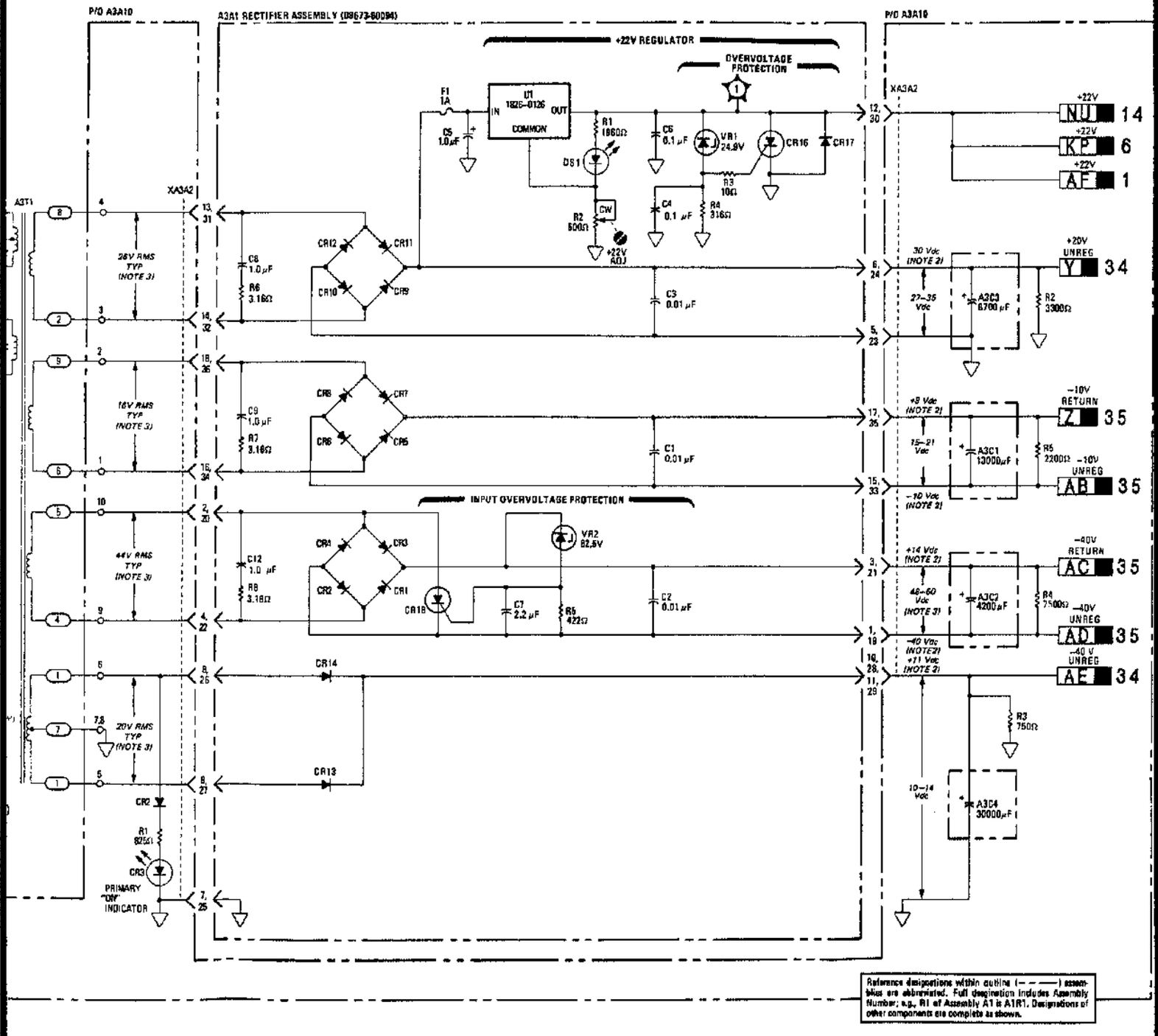


Reference designations within outline (– – – –) assemblies are abbreviated. Full designation includes Assembly Number; e.g., R1 of Assembly A1 is A1R1. Designations of other components are complete as shown.

Figure 8-271. Rectifier As

www.valuetronics.com

FIG. 8-271
Sht 3 of 3



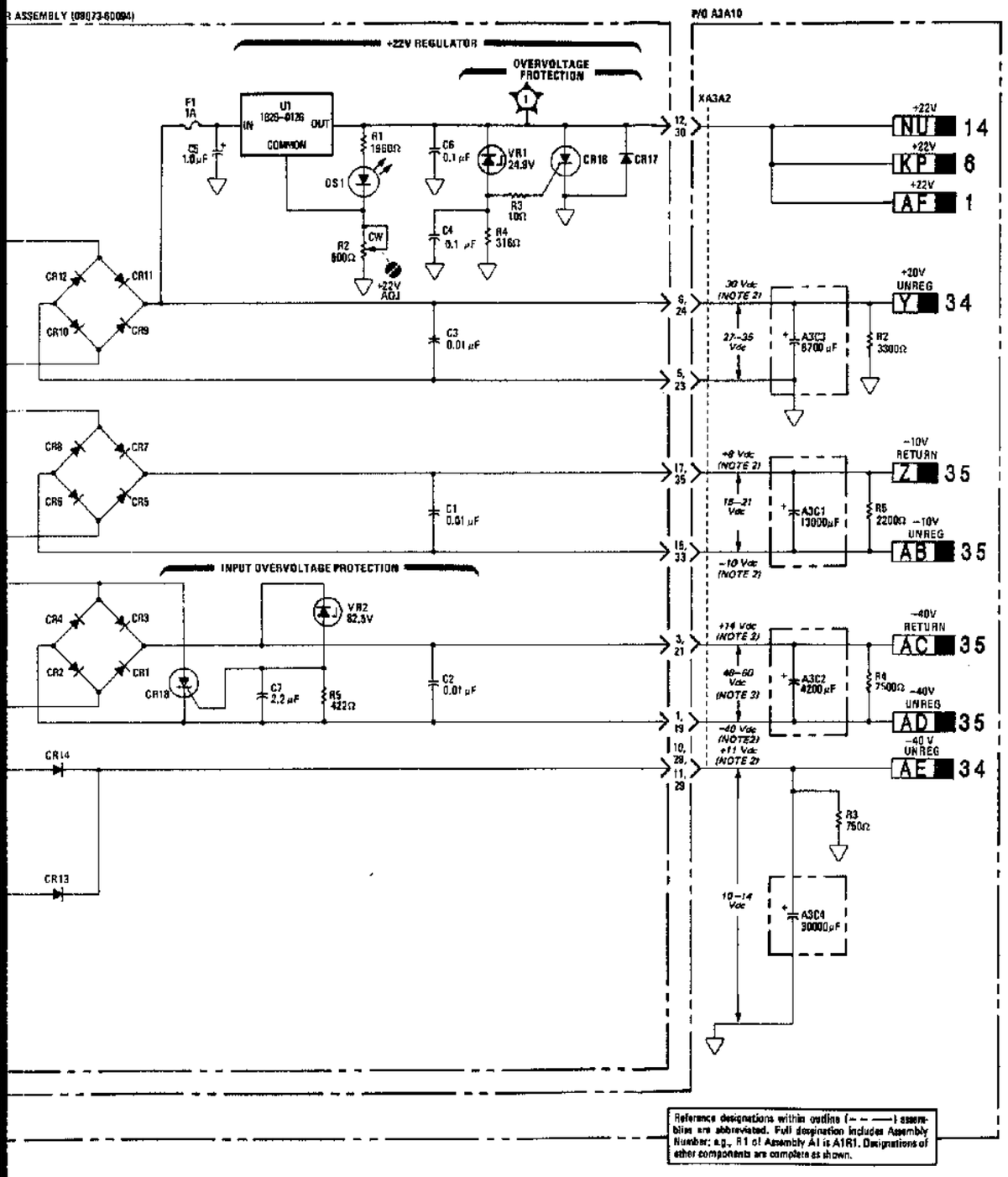


**WARNING**

SECONDARY ac VOLTAGES OF GREATER THAN 30 Vac AND RECTIFIED dc VOLTAGES OF GREATER THAN 60 Vdc ARE ALWAYS PRESENT ON THIS ASSEMBLY WHEN THE INSTRUMENT IS CONNECTED TO THE LINE VOLTAGE.
THESE VOLTAGES COULD CAUSE PERSONAL INJURY IF CONTACTED. BE CAREFUL WHILE WORKING ON THE CIRCUIT BOARDS WITH POWER SUPPLIED TO THE INSTRUMENT.
IF THIS CIRCUIT BOARD IS PLACED ON AN EXTENDER BOARD, THE POSSIBILITY OF COMING IN CONTACT WITH THE SECONDARY ac VOLTAGES (>30 Vac) OR RECTIFIED dc VOLTAGES (>60 Vdc) IS GREATLY INCREASED. THESE VOLTAGES COULD CAUSE PERSONAL INJURY IF CONTACTED. BE CAREFUL WHILE WORKING WITH THIS CIRCUIT BOARD WITH POWER SUPPLIED. WORK WITH ONE HAND. DO NOT TOUCH THE EXTENDER BOARD.

**CAUTION**

DO NOT REMOVE OR INSERT POWER SUPPLY BOARDS WITH THE POWER CABLE CONNECTED. DAMAGE TO THE INSTRUMENT MAY OCCUR.

NOTES

1. 4A 100/120 VAC
   2A 220/240 VAC.
2. MEASURED WITH RESPECT TO CHASSIS GROUND.
3. USE VOLTMETER WITH FLOATING COMMON.
4. REFER TO TABLE 8-1 FOR SCHEMATIC DIAGRAM NOTES.

REFERENCE DESIGNATIONS

| NO PREFIX | A3A10 |
|---|---|
| W1 | C5,7 |
| A3 | CR1–3 |
| B1 | K1 |
| C1–6 | P3,4 |
| F1 | R1–5 |
| T1 | XA3A2 |
| **A3A1** | **A3A11** |
| C1-9,12 | T81 |
| CR1-14,16-18 | |
| DS1 | |
| F1 | |
| R1-8 | |
| TP1 | |
| U1 | |
| VR1,2 | |

**33**

A3A1, A3A10, A3A11

Figure 8-271. Rectifier Assembly Schematic Diagram



www.valuetronics.com

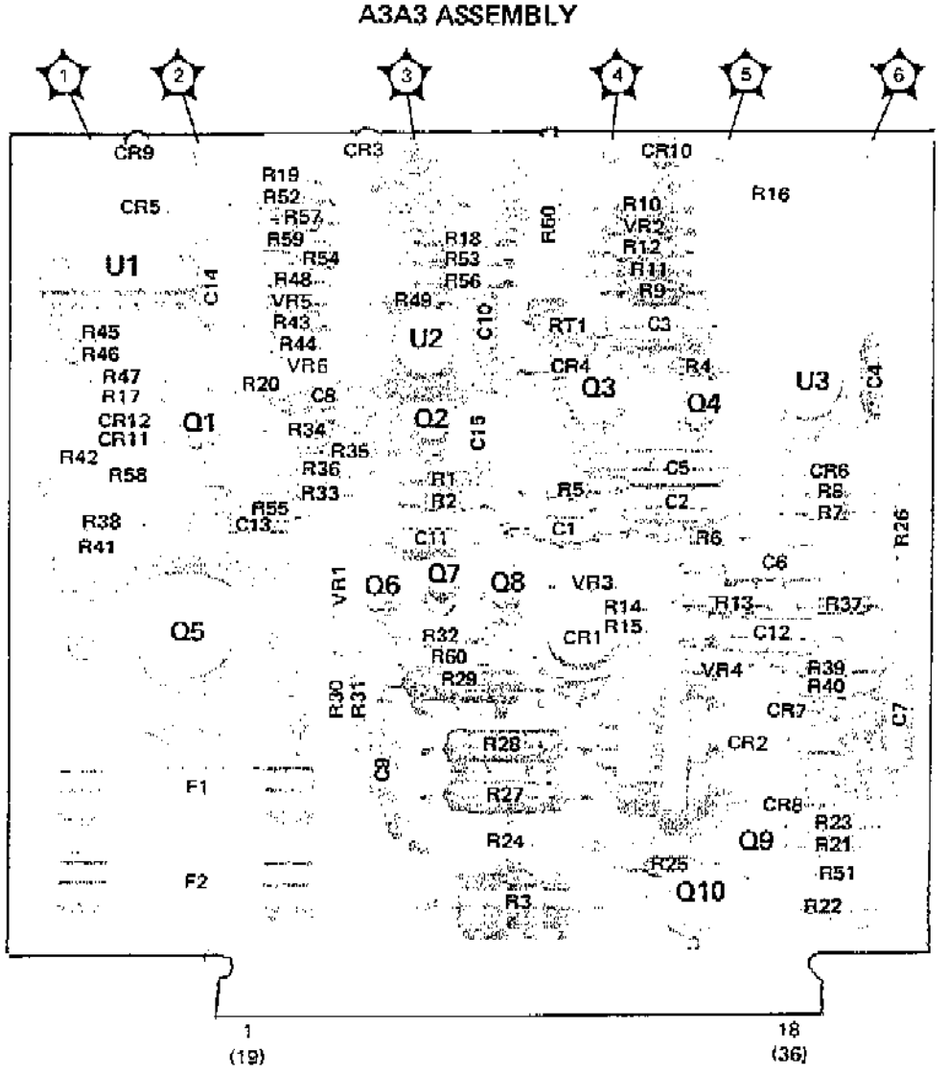


Figure 8-272. A3A3 Positive Regulator Assembly Component and Test Point Location

8-271a

www.valuetronics.com

FIG. 8-273
SHT 1 of 3

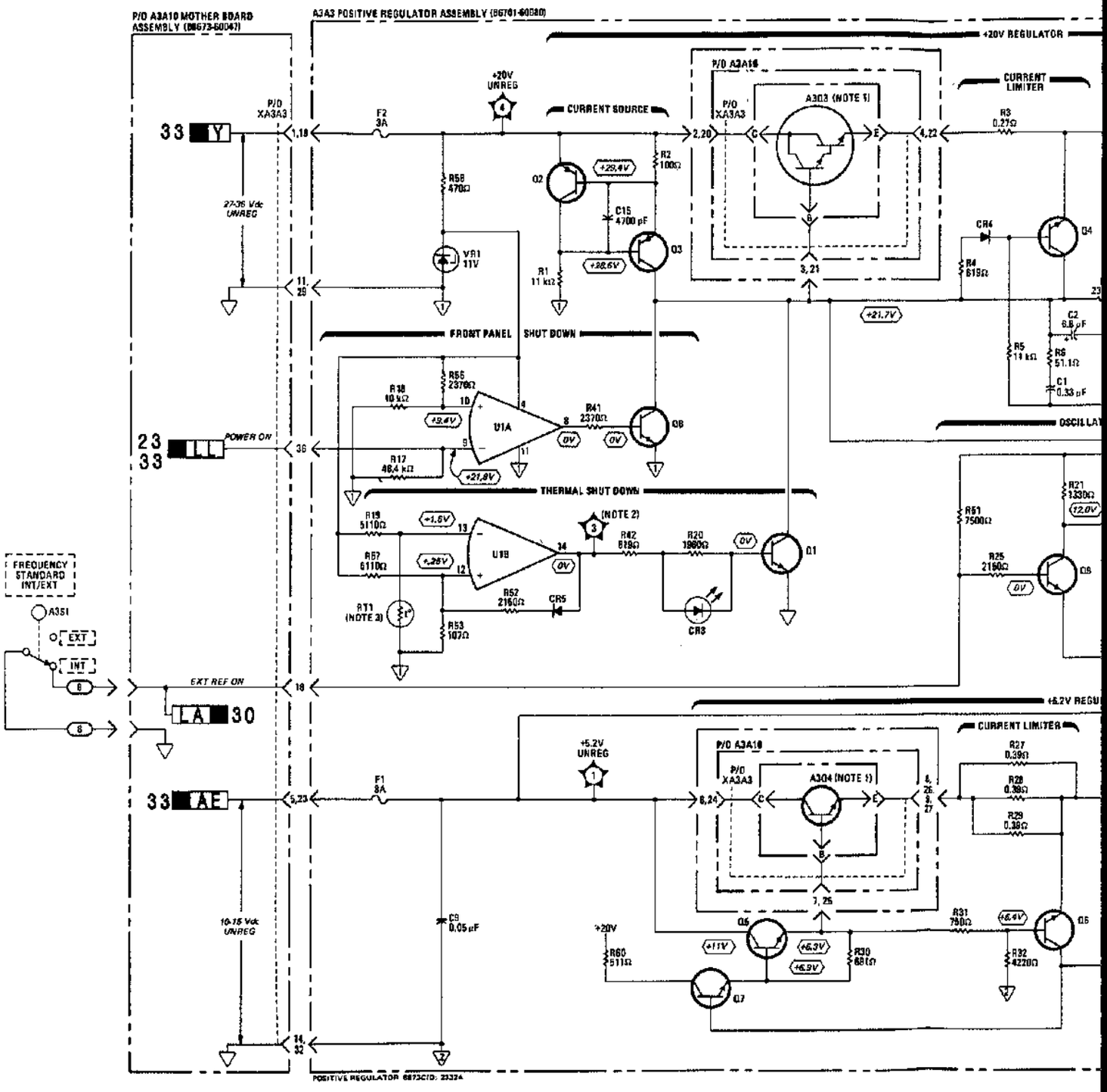


www.valuetronics.com

FIG. 8-273
Sht 2 of 3

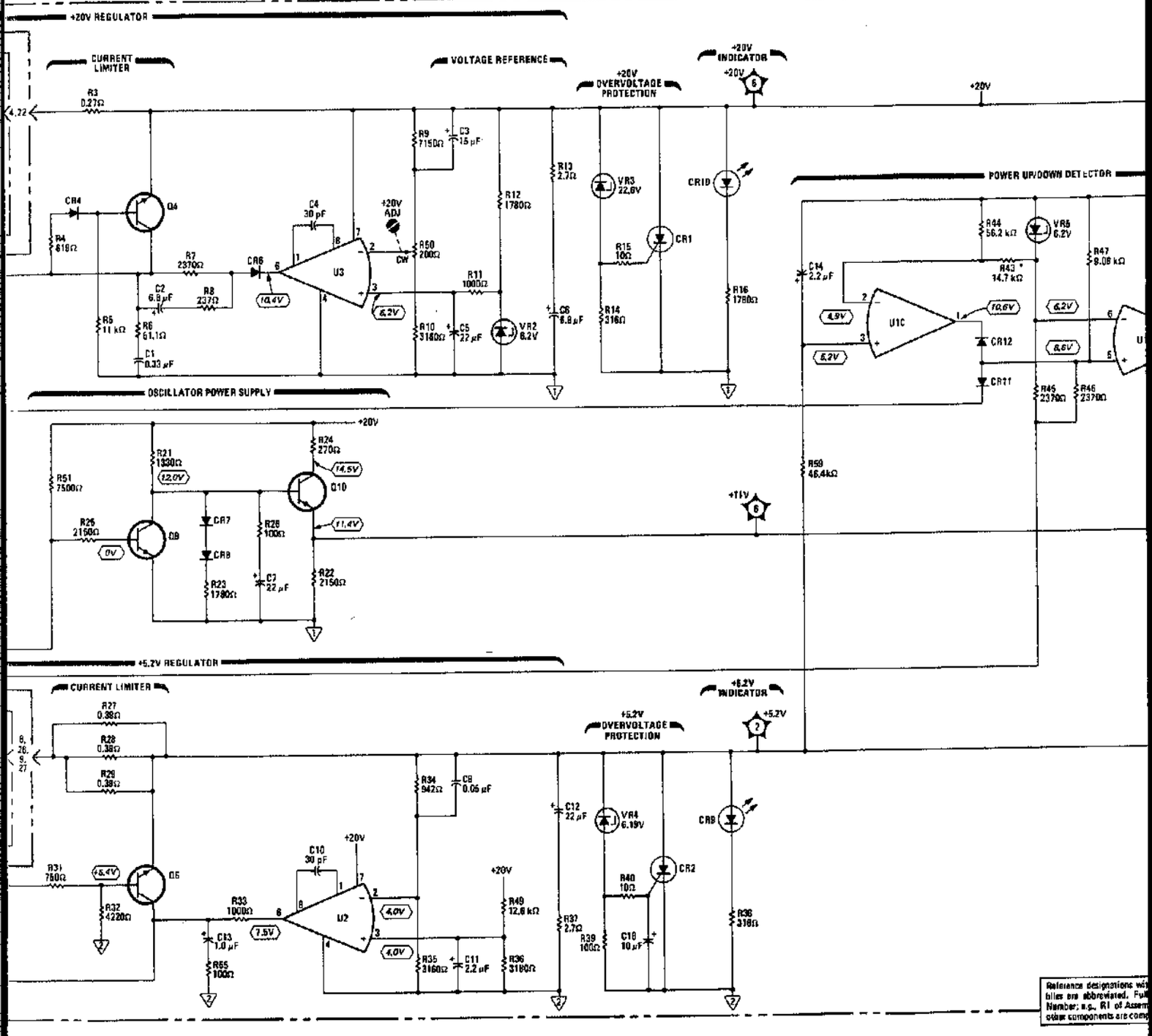


www.valuetronics.com

FIG. 8-273
Sht 3 of 3

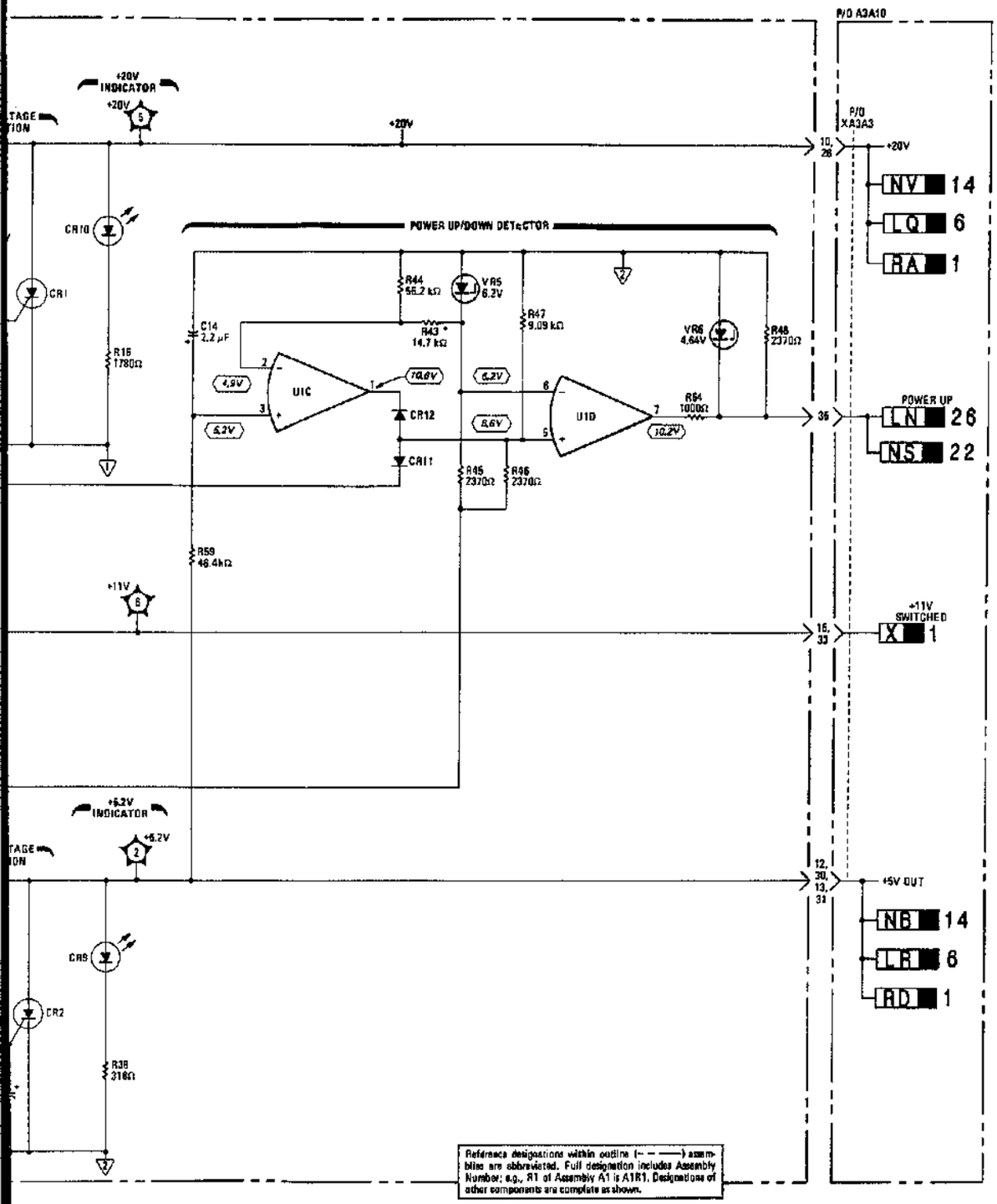


**WARNING**

VOLTAGES OF GREATER THAN 60 Vdc DIFFERENTIAL ARE ALWAYS PRESENT ON THIS BOARD ASSEMBLY WHEN THE INSTRUMENT IS CONNECTED TO THE LINE VOLTAGE. THIS VOLTAGE COULD CAUSE PERSONAL INJURY IF CONTACTED. BE CAREFUL WHILE WORKING ON THIS BOARD WITH POWER SUPPLIED TO THE INSTRUMENT.

**CAUTION**

DO NOT REMOVE OR INSERT POWER SUPPLY BOARDS WITH THE POWER CABLE CONNECTED. DAMAGE TO THE INSTRUMENT MAY OCCUR.

NOTES

1. A3C3 AND A3C4 ARE SEPARATE ASSEMBLIES MOUNTED ON THE REAR PANEL HEAT SINK AND A3A10 MOTHER BOARD ASSEMBLY.
2. DURING NORMAL OPERATION THE VOLTAGE AT TP3 IS < 6-Vdc (CR3 IS OFF). IN THE THERMAL SHUT DOWN MODE THE VOLTAGE AT TP3 IS < 10 Vdc (CR3 IS ON).
3. RT1 RESISTANCE IS ABOUT 1000Ω AT 25° C; 107Ω AT 85° C.
4. REFER TO TABLE 8-1 FOR SCHEMATIC DIAGRAM NOTES.

* ASTERISK INDICATES SELECTED COMPONENTS. AVERAGE VALUE SHOWN.

REFERENCE DESIGNATIONS

| A3 | A3A3 |
|---|---|
| Q3,4<br>S1 | C1–16<br>CR1–12<br>F1,2 |
| A3A10 | Q1–10<br>R1–60 |
| XA3A3 | RT1<br>TP1–6<br>U1–3<br>VR1–6 |

TRANSISTOR AND INTEGRATED CIRCUIT PART NUMBERS

| REFERENCE DESIGNATIONS | PART NUMBERS |
|---|---|
| Q1,4,6–8 | 1854-0404 |
| Q2 | 1853-0461 |
| Q3 | 1853-0012 |
| Q5 | 1854-0441 |
| Q9 | 1854-0005 |
| Q10 | 1854-0039 |
| U1 | 1826-0161 |
| U2,3 | 1820-0223 |

**34**
**A3A3**

Figure 8-273 Positive Regulator Assembly Schematic Diagram



www.valuetronics.com

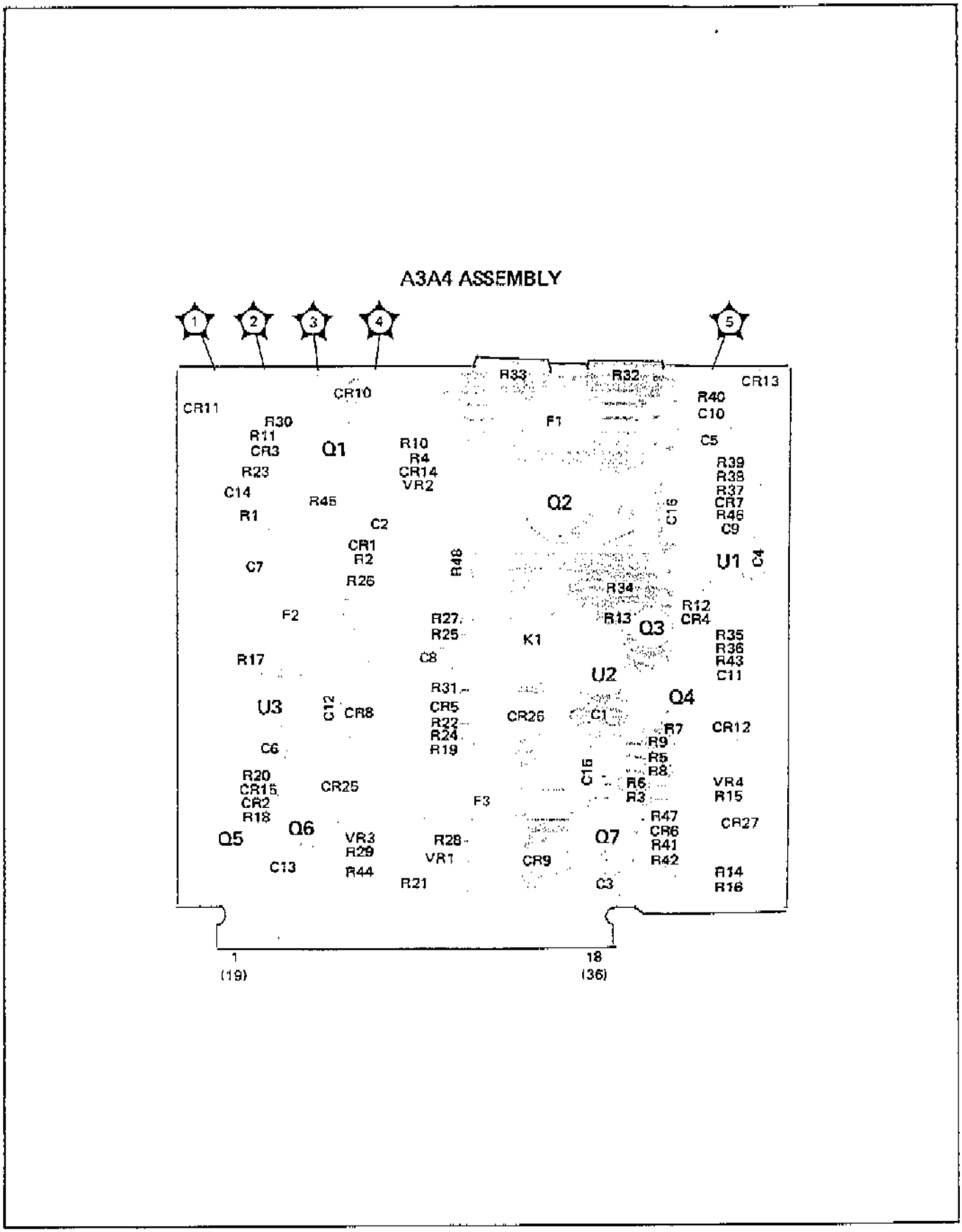


Figure 8-274. A3A4 Negative Regulator Assembly Component and Test Point Location

8-273a

www.valuetronics.com

FIG. 8-275
Sht 1 of 2

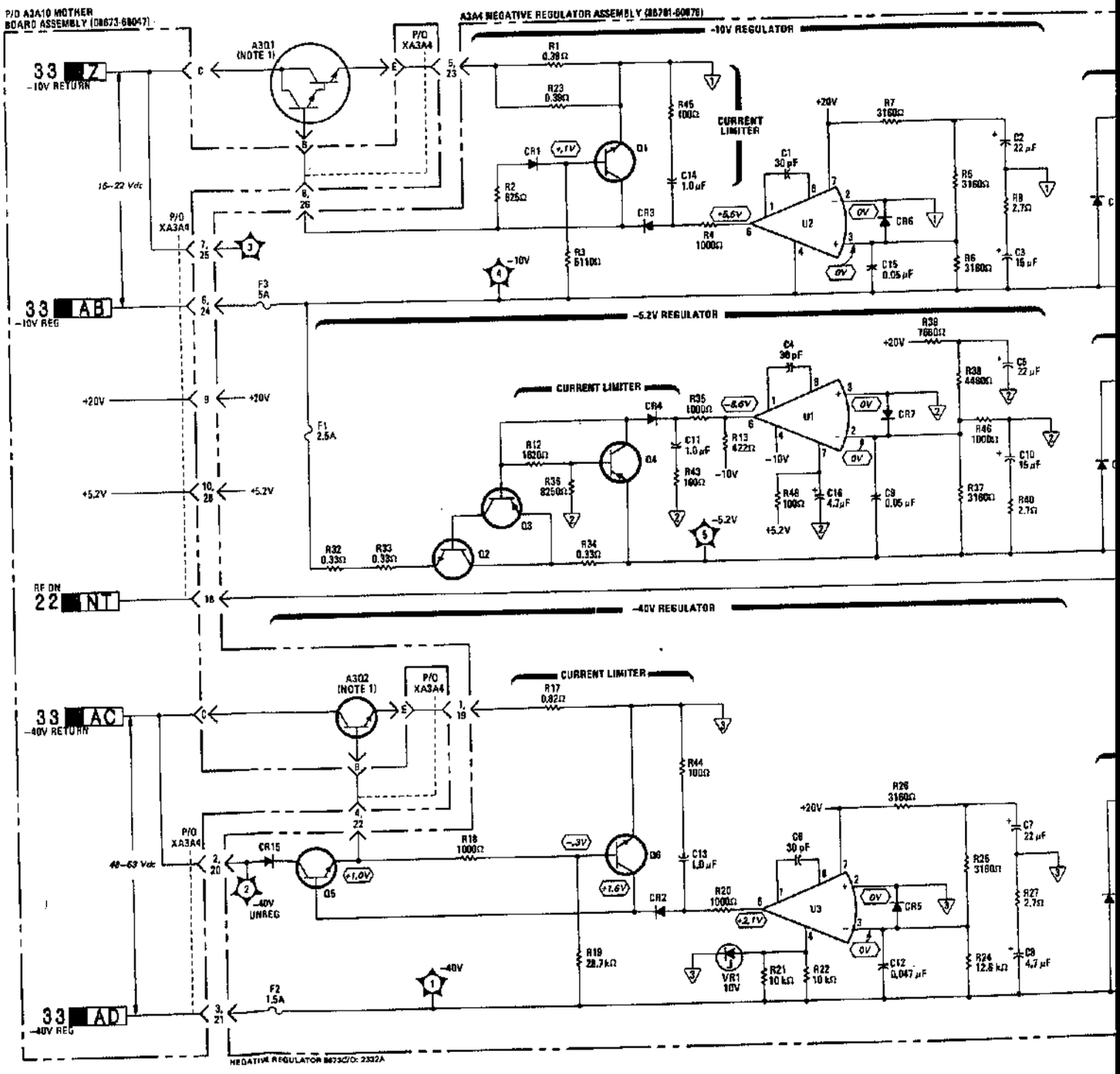


www.valuetronics.com

FIG. 8-275
Sht 2 of 2

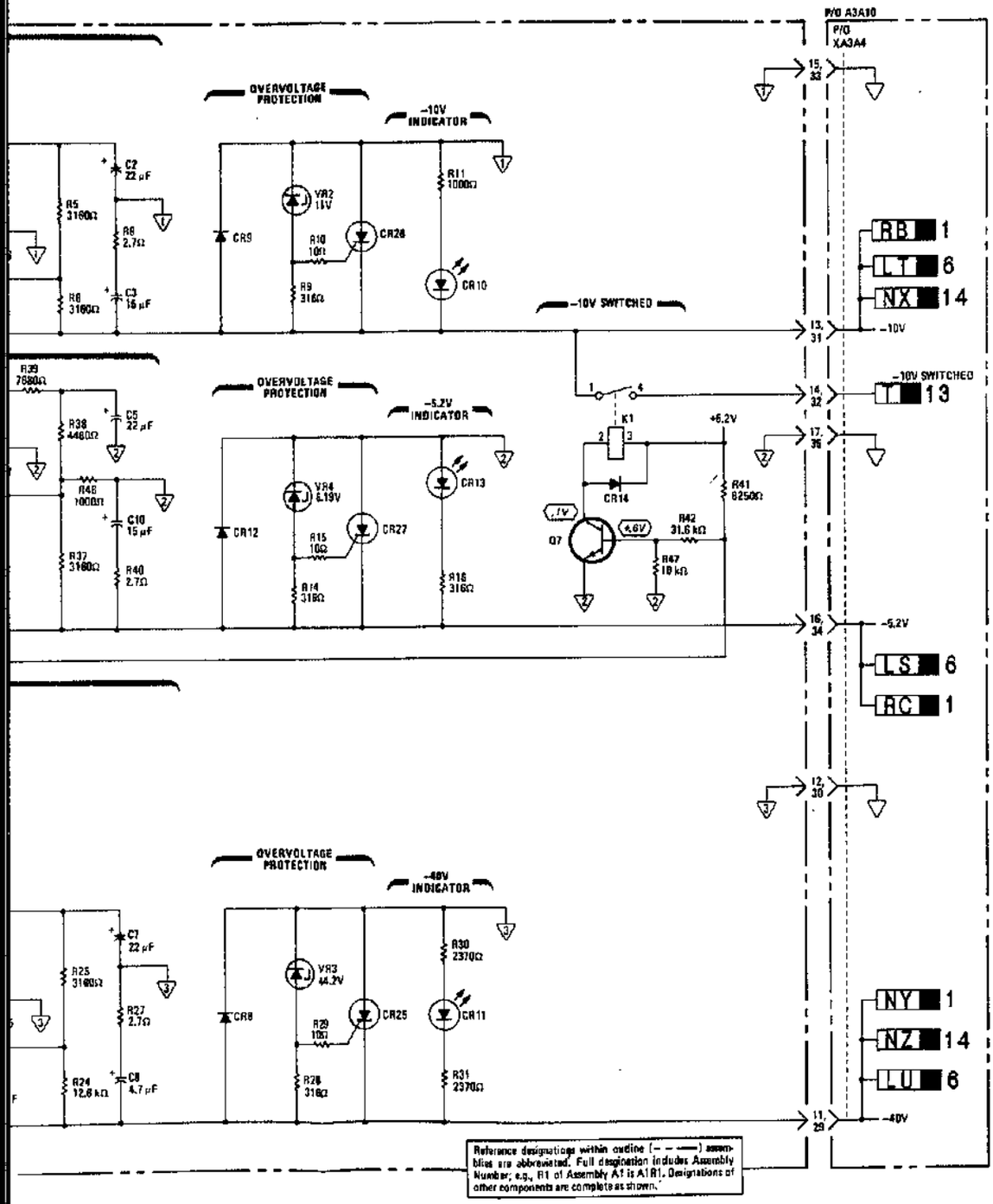


**WARNING**

DC VOLTAGES OF >60 Vdc DIFFERENTIAL ALWAYS PRESENT ON THIS BOARD ASSEMBLY WHENEVER THE INSTRUMENT IS CONNECTED TO THE LINE VOLTAGE. THIS VOLTAGE COULD CAUSE PERSONAL INJURY IF CONTACTED. BE CAREFUL WHILE WORKING ON THIS CIRCUIT WITH THE LINE VOLTAGE CONNECTED. IF THIS CIRCUIT BOARD IS PLACED ON AN EXTENDER BOARD, THE POSSIBILITY OF COMING IN CONTACT WITH THE 60 Vdc DIFFERENTIAL IS GREATLY INCREASED. THIS COULD CAUSE PERSONAL INJURY IF CONTACTED. BE CAREFUL WHILE WORKING WITH THIS CIRCUIT BOARD WITH POWER SUPPLIED. WORK WITH ONE HAND. DO NOT TOUCH THE EXTENDER BOARD.

**CAUTION**

DO NOT REMOVE OR INSERT POWER SUPPLY BOARDS WITH THE POWER CABLE CONNECTED. DAMAGE TO THE INSTRUMENT MAY OCCUR.

NOTES

1. A3Q1 AND A3Q2 ARE MOUNTED ON THE REAR PANEL HEAT SINK AND A3A10 MOTHER BOARD ASSEMBLY.
2. REFER TO TABLE 8-1 FOR SCHEMATIC DIAGRAM NOTES.

REFERENCE DESIGNATIONS

| A3 | A3A4 |
|---|---|
| Q1, 2 | C1-18<br>CR1-15, 25-27<br>F1-3<br>K1<br>Q1-7<br>R1-48<br>TP1-6<br>U1-3<br>VR1-4 |
| A3A10 | |
| XA3A4 | |

TRANSISTOR AND INTEGRATED CIRCUIT PART NUMBER

| REFERENCE DESIGNATIONS | PART NUMBERS |
|---|---|
| A3 | |
| Q1 | 1854-0618 |
| Q2 | 1854-0294 |
| A3A4 | |
| Q1,6,7 | 1854-0404 |
| Q2 | 1854-0441 |
| Q3 | 1853-0001 |
| Q4 | 1853-0007 |
| Q5 | 1854-0271 |
| U1-3 | 1820-0223 |

35
A3A4

**Figure 8-275. Negative Regulator Assembly Schematic Diagram**



www.valuetronics.com

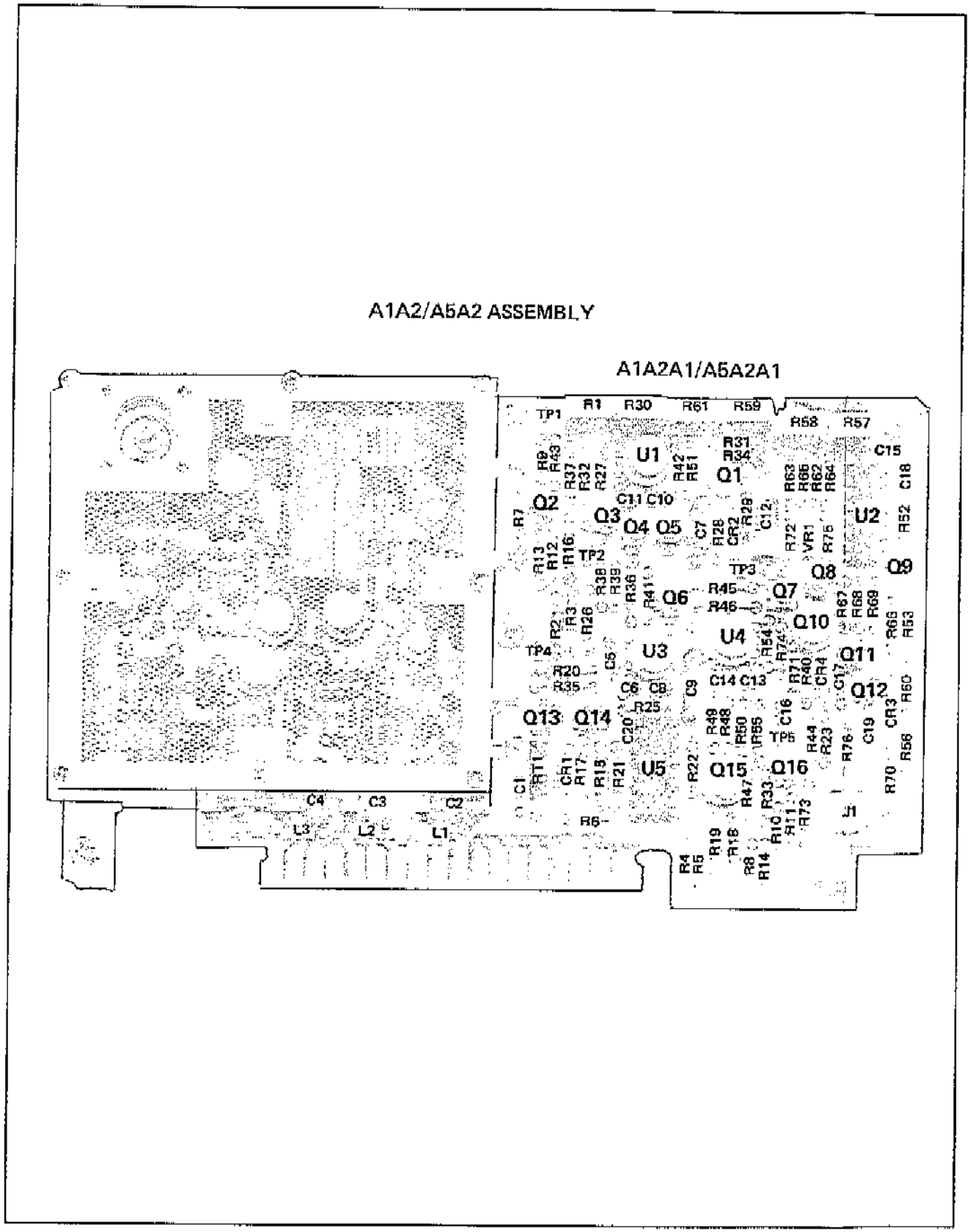


Figure 8-276. A5A2A1 Detector/ALC Assembly Component and Test Point Location

8-274a

www.valuetronics.com

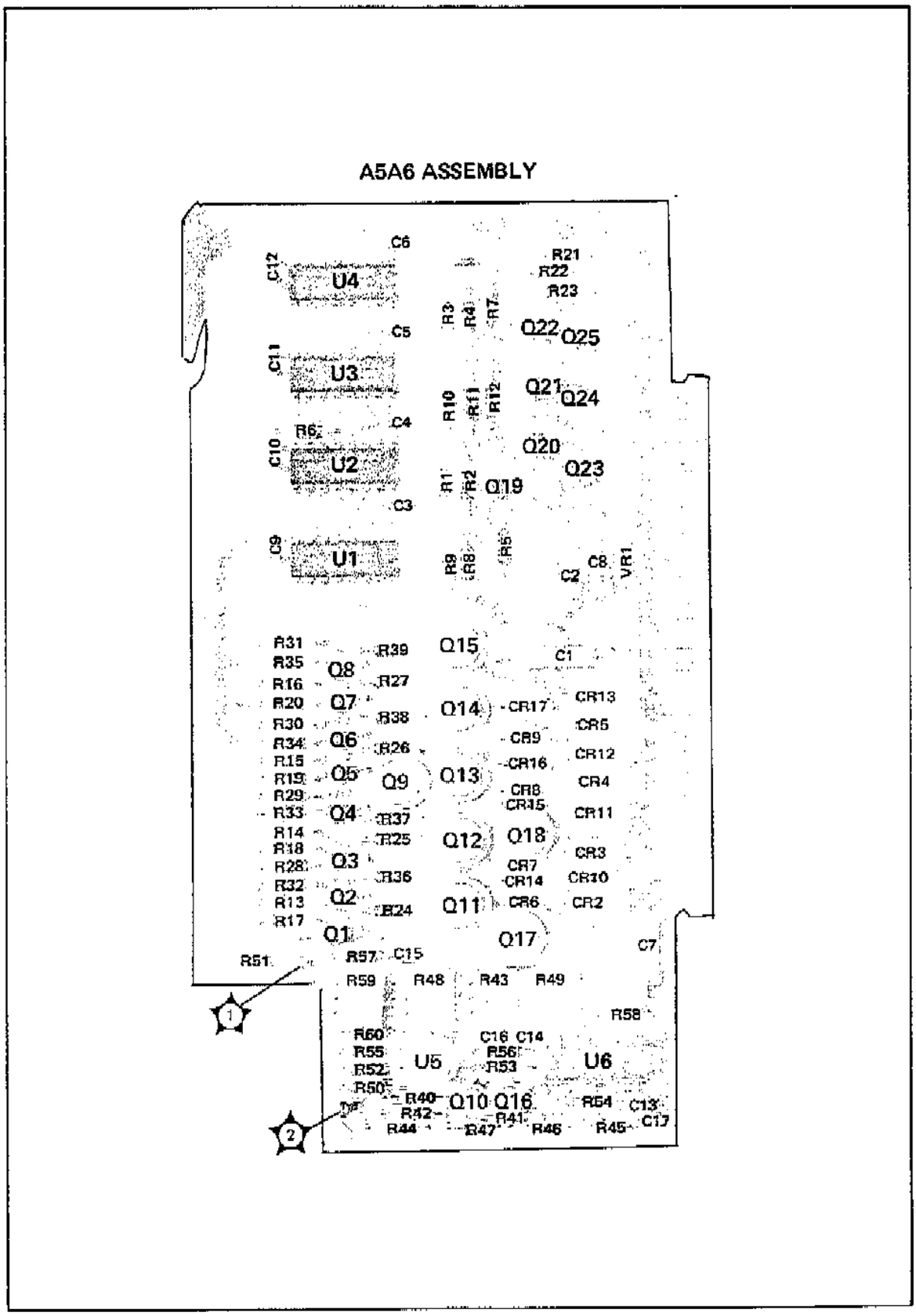


Figure 8-277. A5A6 Switch Driver Assembly Component and Test Point Location



www.valuetronics.com

FIG. 8-278
Sht 1 of 4

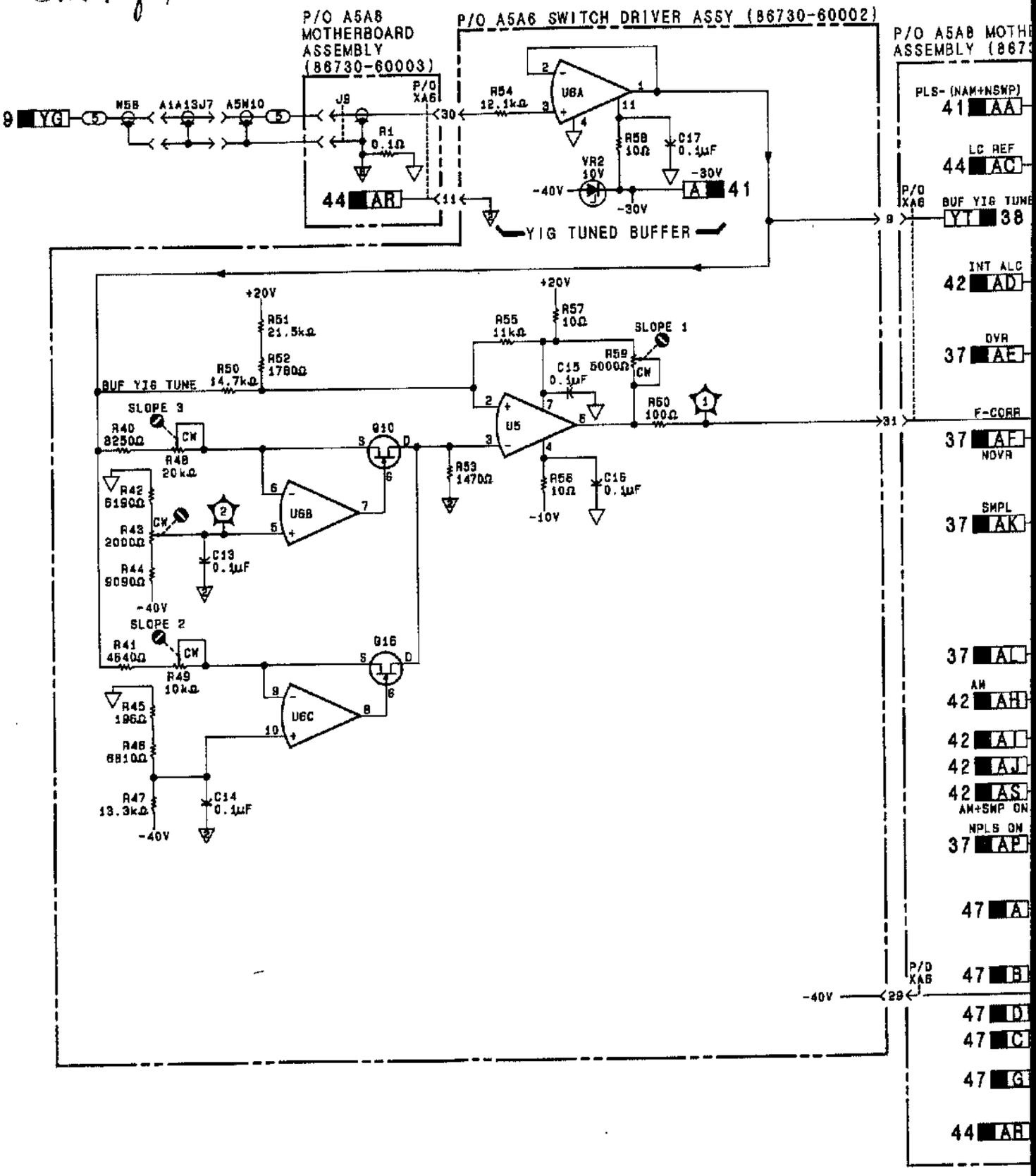


www.valuetronics.com

FIG. 8-278
Sht 2 of 4

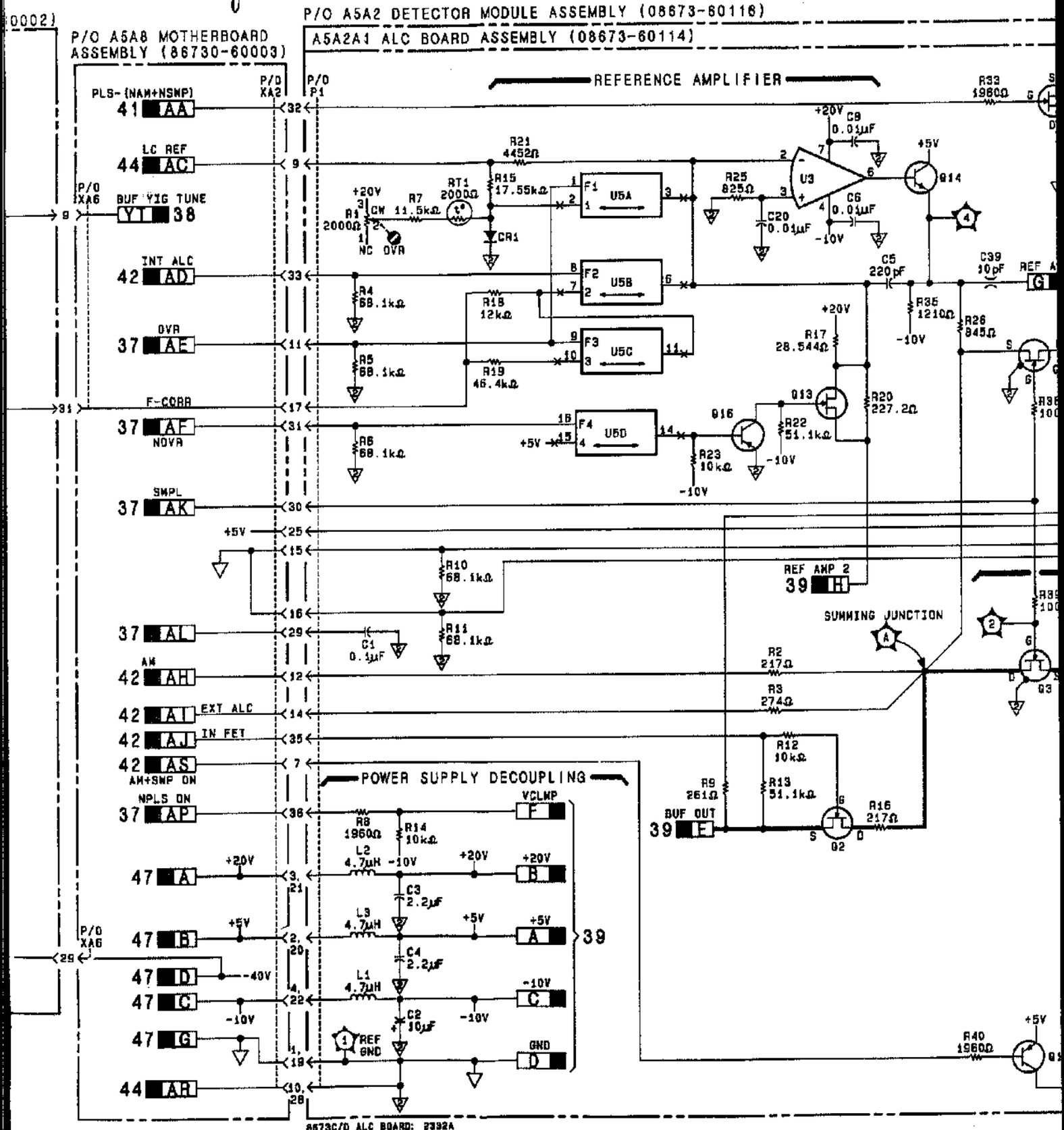


www.valuetronics.com

FIG. 8-278
Sht 3 of 4

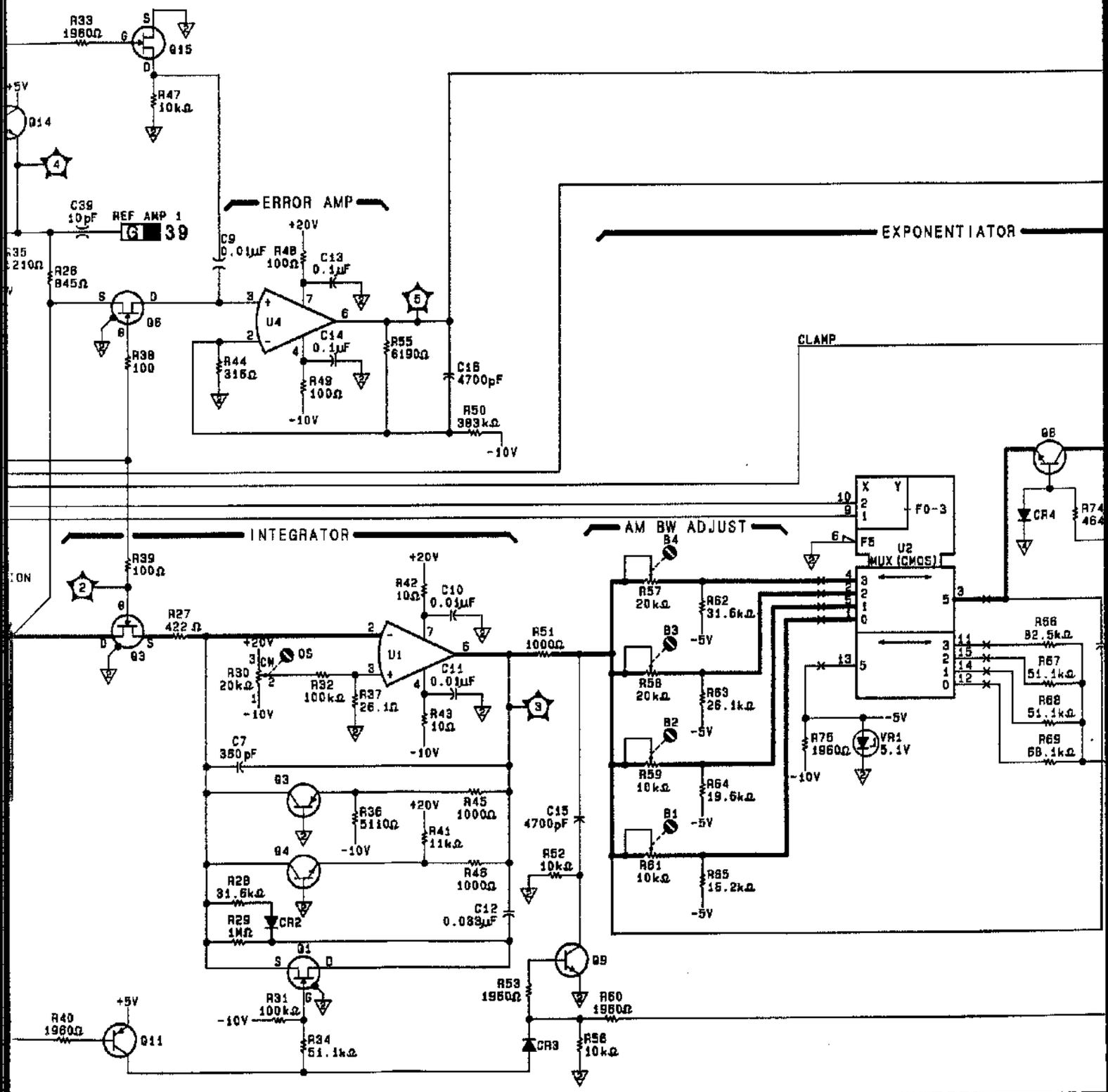


www.valuetronics.com

FIG. 8-278
Sht 4 of 4

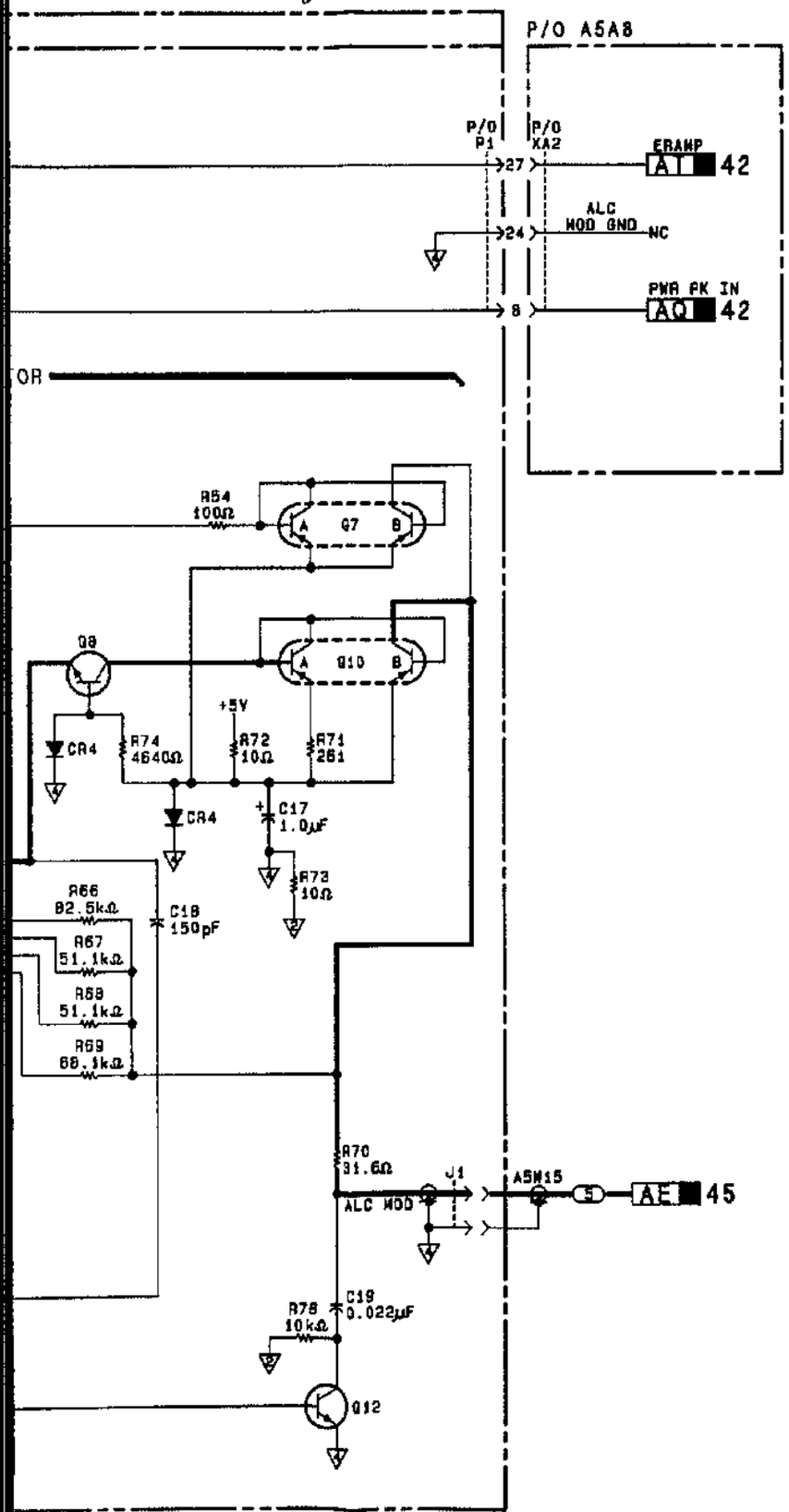


NOTES

1. REFER TO TABLE 8-1 FOR SCHEMATIC DIAGRAM NOTES.

REFERENCE DESIGNATIONS

| NO PREFIX | A5A6 |
|---|---|
| W5B<br>A1A13J7<br>A5W10, 15 | C13-17<br>Q10, 15<br>R40-60<br>TP1, 2<br>U5, 6<br>VR2 |
| **A5A2A1** | **A5A8** |
| C1-20<br>CR1-4<br>J1<br>L1-3<br>P1<br>Q1-15<br>R1-23, 25-76<br>RT1<br>TP1-5<br>U1-5<br>VR1 | J9<br>R1<br>XA2, XA6 |

TRANSISTOR AND INTEGRATED CIRCUIT PART NUMBERS

| REFERENCE DESIGNATION | PART NUMBER |
|---|---|
| A5A2A1 | |
| Q1, 3, 6 | 1855-0276 |
| Q2, 13 | 1855-0253 |
| Q4, 8 | 1854*0477 |
| Q5, 16 | 1853-0322 |
| Q7, 11 | 1853-0459 |
| Q9, 12, 14 | 1854-0810 |
| Q10 | 1853-0529 |
| Q15 | 1855-0251 |
| U1, 4 | 1826-0601 |
| U2 | 1826-0486 |
| U3 | 1826-0488 |
| U5 | 1826-0720 |
| A5A6 | |
| Q10, 16 | 1855-0414 |
| U5 | 1826-0574 |
| U6 | 1826-0323 |

INTEGRATED CIRCUIT VOLTAGE AND GROUND CONNECTIONS

| REFERENCE DESIGNATION | PIN NUMBER |
|---|---|
| U2 | +5V - 15<br>-5V - 7<br>⏚ - 8 |
| U5 | +20V - 13<br>-10V - 4<br>⏚ - 5 |



P/O A5A2, P/O A5A2A1, A5A6

Figure 8-278. Detector/ALC Assembly Schematic Diagram



www.valuetronics.com

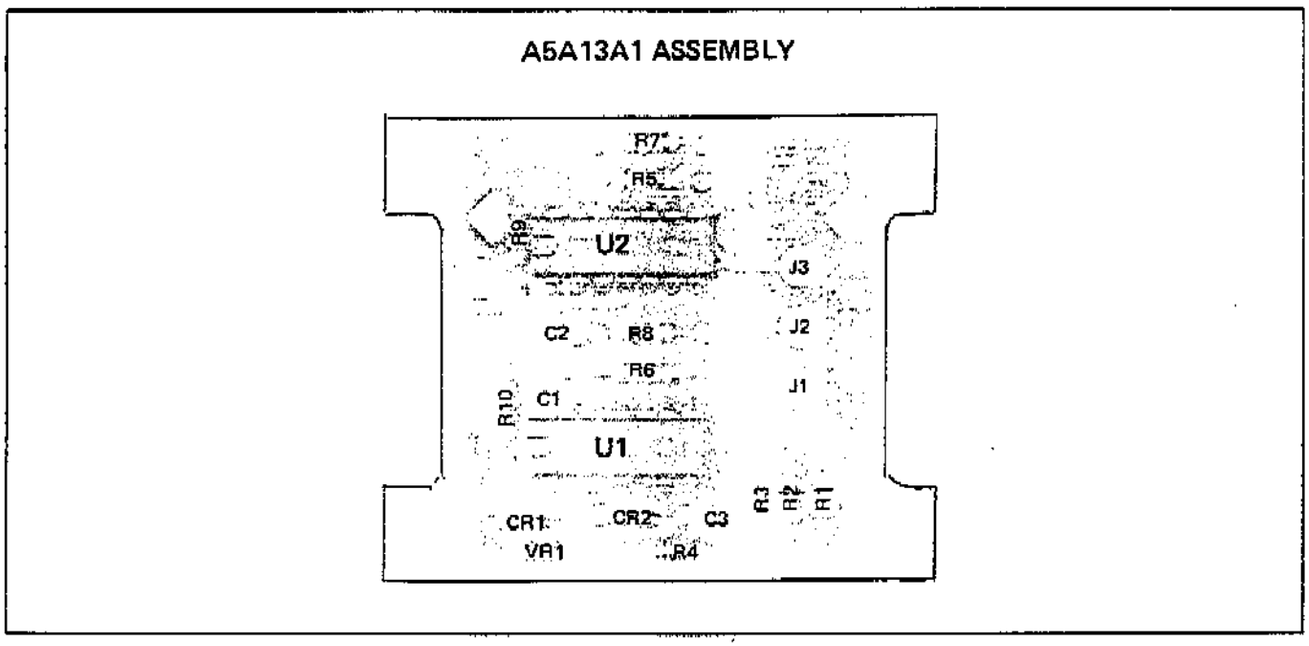


Figure 8-279. A5A13A1 Pulse Input Switch Board Assembly Component Location

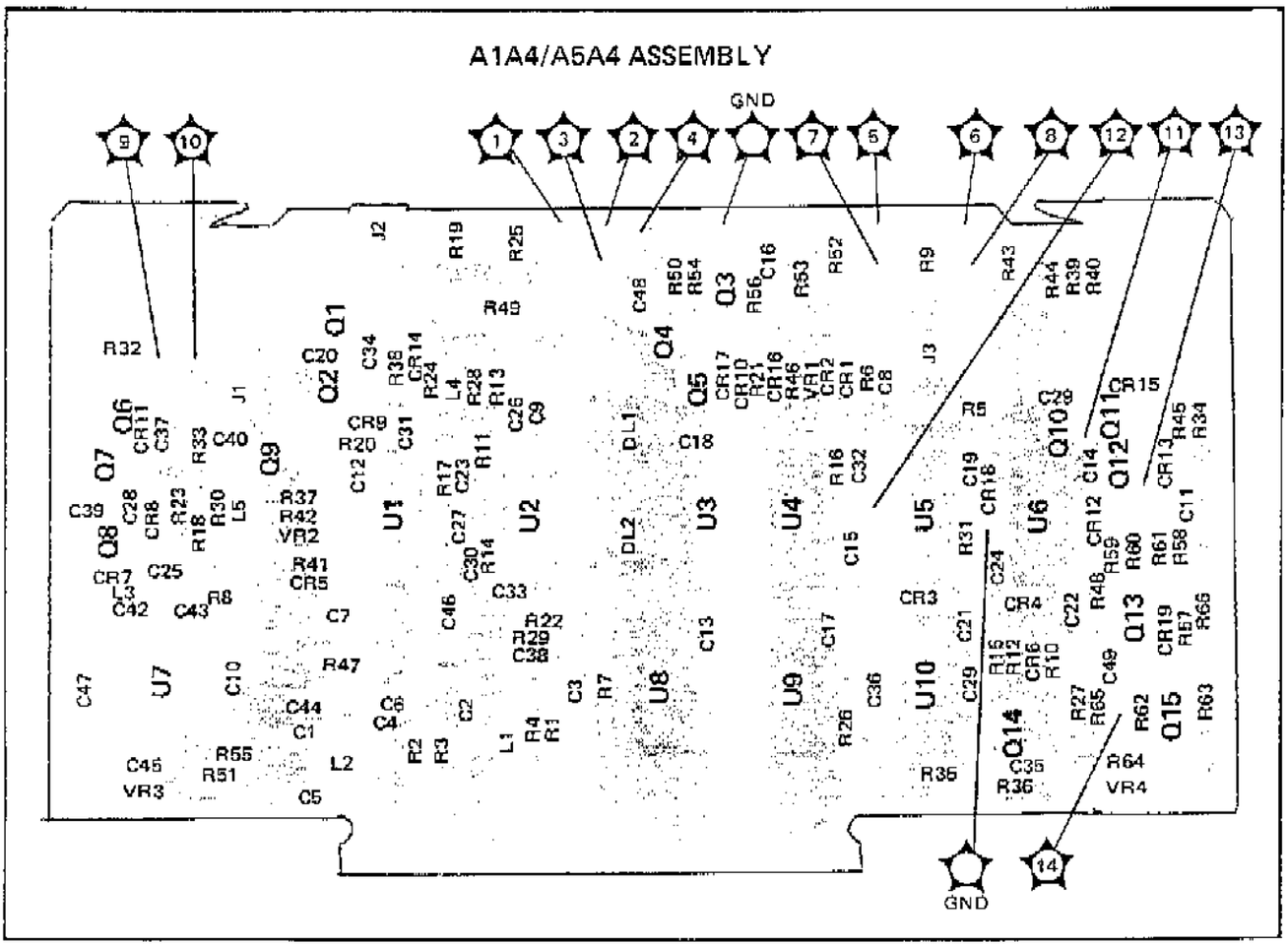


Figure 8-280. A5A4 Pulse Driver Processing Assembly Component and Test Point Location



www.valuetronics.com

FIG. 8-281
Sht 1 of 5

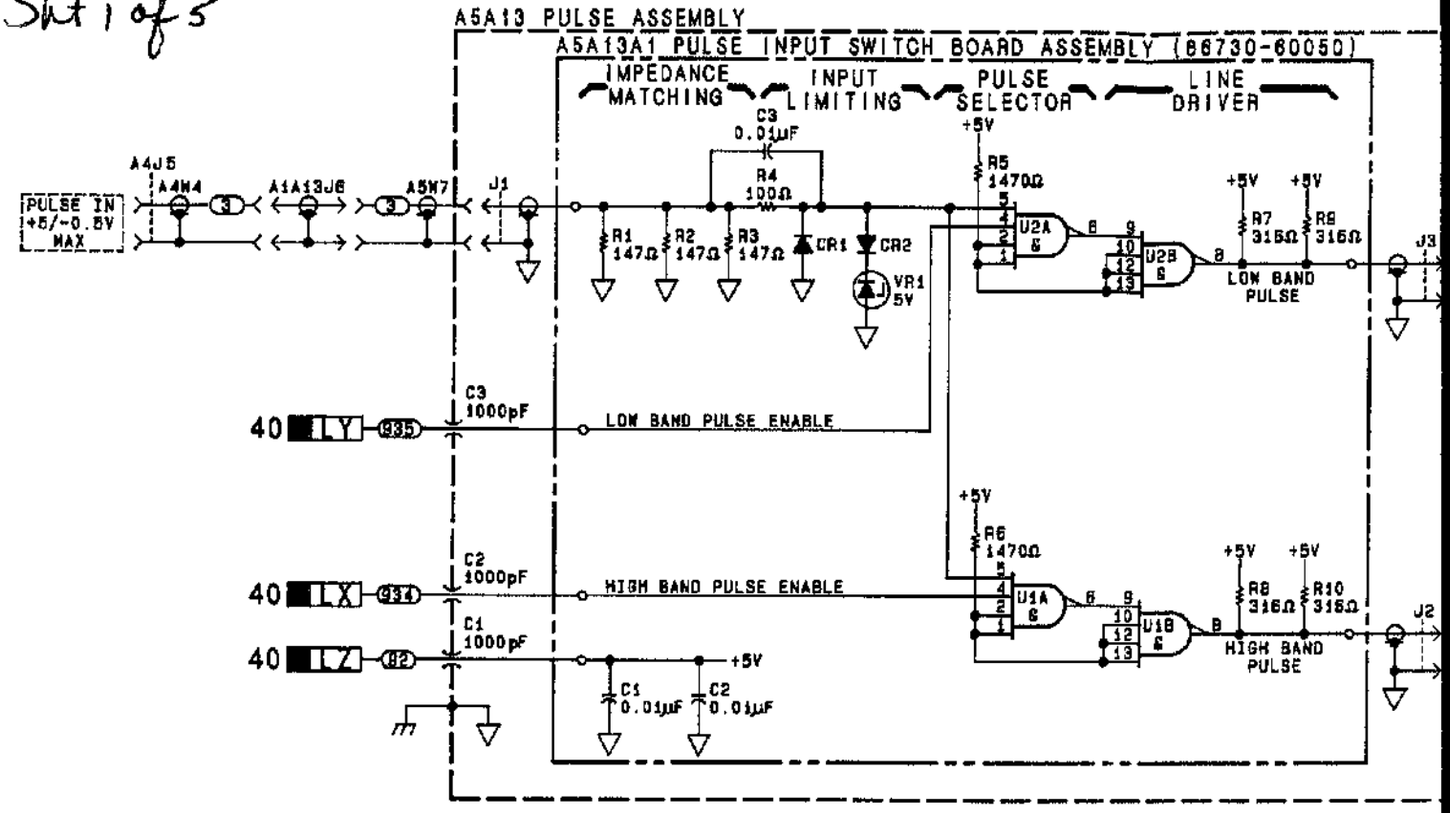


www.valuetronics.com

FIG-8-28
SHT 2 of 5

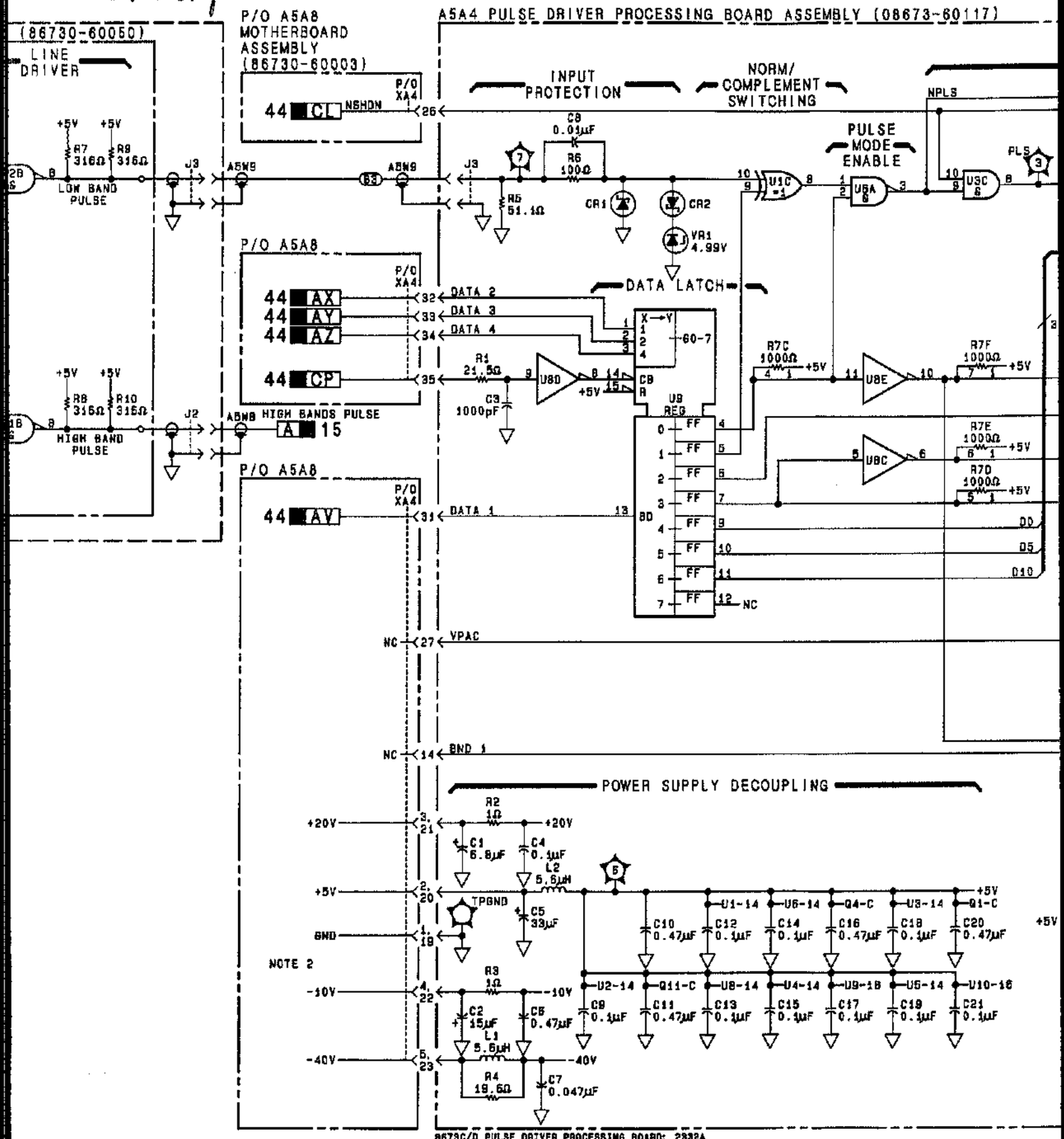


www.valuetronics.com

FIG. 8-281
Sht 3 of 5

73-60117)

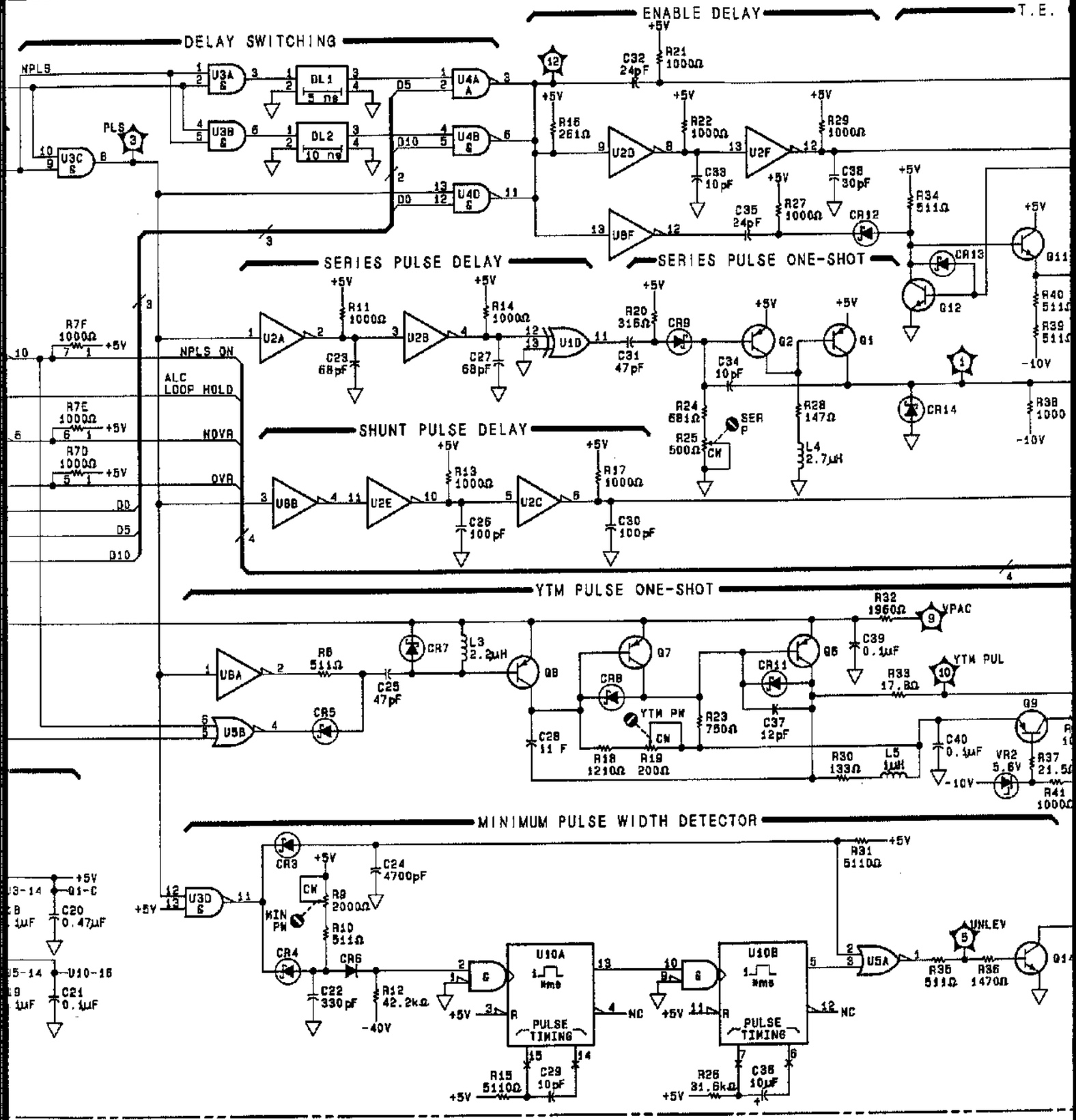


www.valuetronics.com

FIG. 8-281
Sht 4 of 5

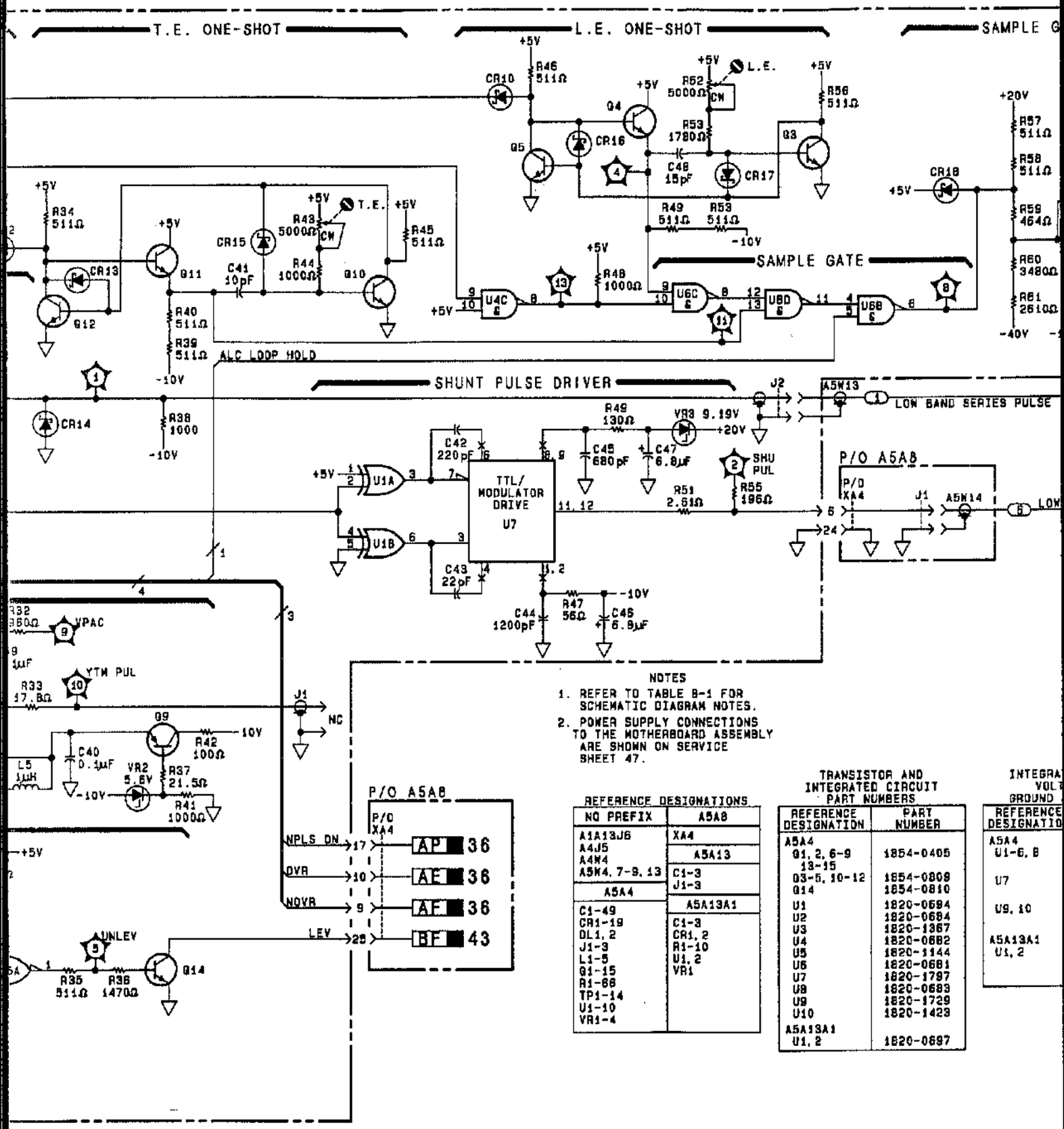


Figure 8-281.

www.valuetronics.com

FIG. 8-281
SHT 5 of 5

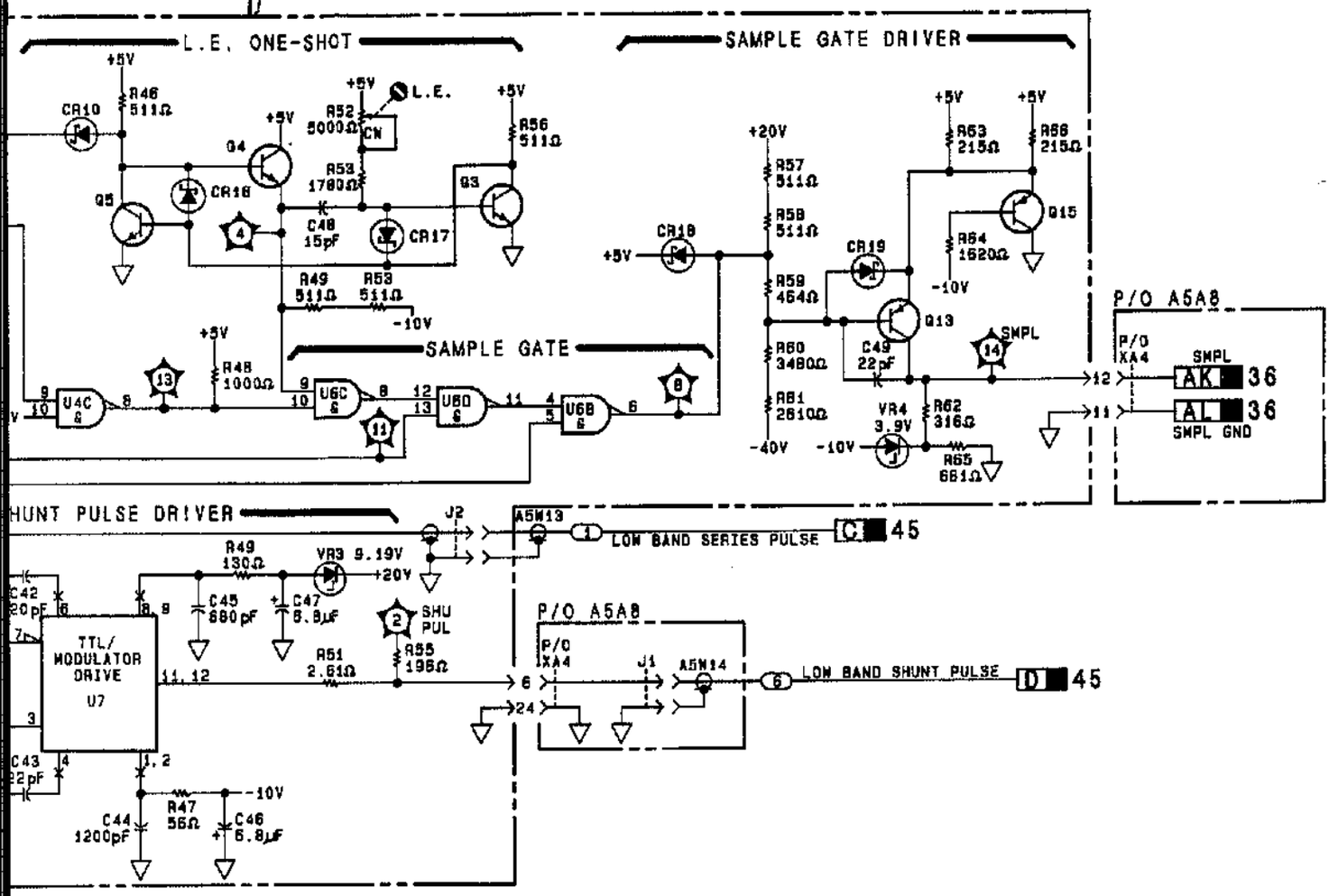


NOTES

1. REFER TO TABLE 8-1 FOR SCHEMATIC DIAGRAM NOTES.
2. POWER SUPPLY CONNECTIONS TO THE MOTHERBOARD ASSEMBLY ARE SHOWN ON SERVICE SHEET 47.

REFERENCE DESIGNATIONS

| NO PREFIX | A5A8 |
|---|---|
| A1A13J5<br>A4J5<br>A4W4<br>A5W4, 7-9, 13 | XA4 |
| A5A4 | A5A13 |
| C1-49<br>CR1-19<br>DL1, 2<br>J1-3<br>L1-5<br>Q1-15<br>R1-86<br>TP1-14<br>U1-10<br>VR1-4 | C1-3<br>J1-3 |
| | A5A13A1 |
| | C1-3<br>CR1, 2<br>R1-10<br>U1, 2<br>VR1 |

TRANSISTOR AND INTEGRATED CIRCUIT PART NUMBERS

| REFERENCE DESIGNATION | PART NUMBER |
|---|---|
| A5A4 | |
| Q1, 2, 6-9 13-15 | 1854-0405 |
| Q3-5, 10-12 | 1854-0809 |
| Q14 | 1854-0810 |
| U1 | 1820-0694 |
| U2 | 1820-0684 |
| U3 | 1820-1367 |
| U4 | 1820-0662 |
| U5 | 1820-1144 |
| U6 | 1820-0681 |
| U7 | 1820-1797 |
| U8 | 1820-0683 |
| U9 | 1820-1729 |
| U10 | 1820-1423 |
| A5A13A1 | |
| U1, 2 | 1820-0697 |

INTEGRATED CIRCUIT VOLTAGE AND GROUND CONNECTIONS

| REFERENCE DESIGNATION | PIN NUMBER |
|---|---|
| A5A4 | |
| U1-5, 8 | +5V - 14<br>▽ - 7 |
| U7 | +5V - 10<br>▽ - 5 |
| U9, 10 | +5V - 16<br>▽ - 8 |
| A5A13A1 | |
| U1, 2 | +5V - 14<br>▽ - 7<br>NC - 3, 11 |

37
A5A4, A5A13

Figure 8-281. Pulse Driver Processing Assembly Schematic Diagram



www.valuetronics.com

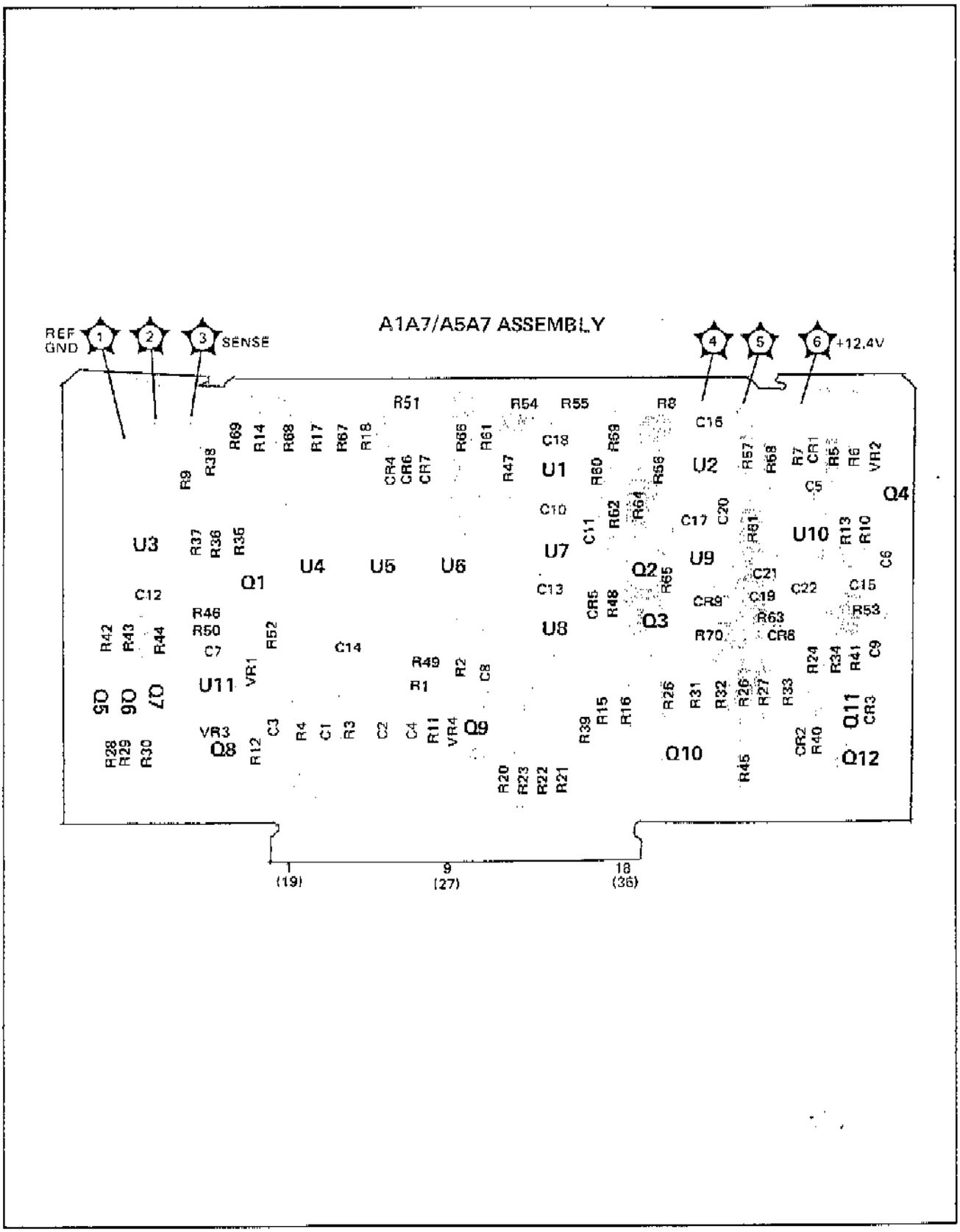


Figure 8-282. A5A7 YIG Driver Board Assembly Component and Test Point Location

8-279a

www.valuetronics.com

FIG. 8-283
Sht 1 of 3

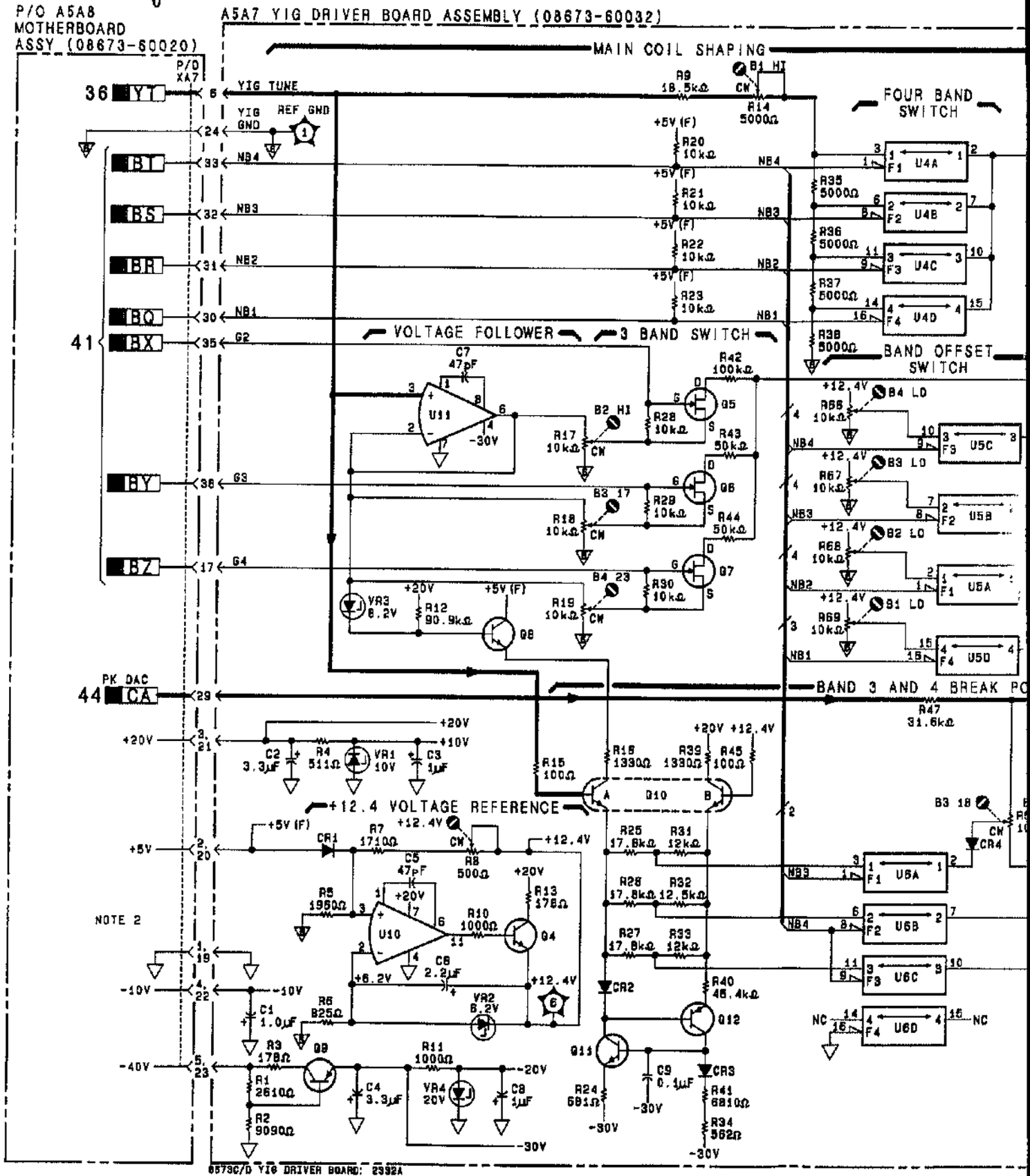


www.valuetronics.com

FIG. 8-283
Sht 2 of 3

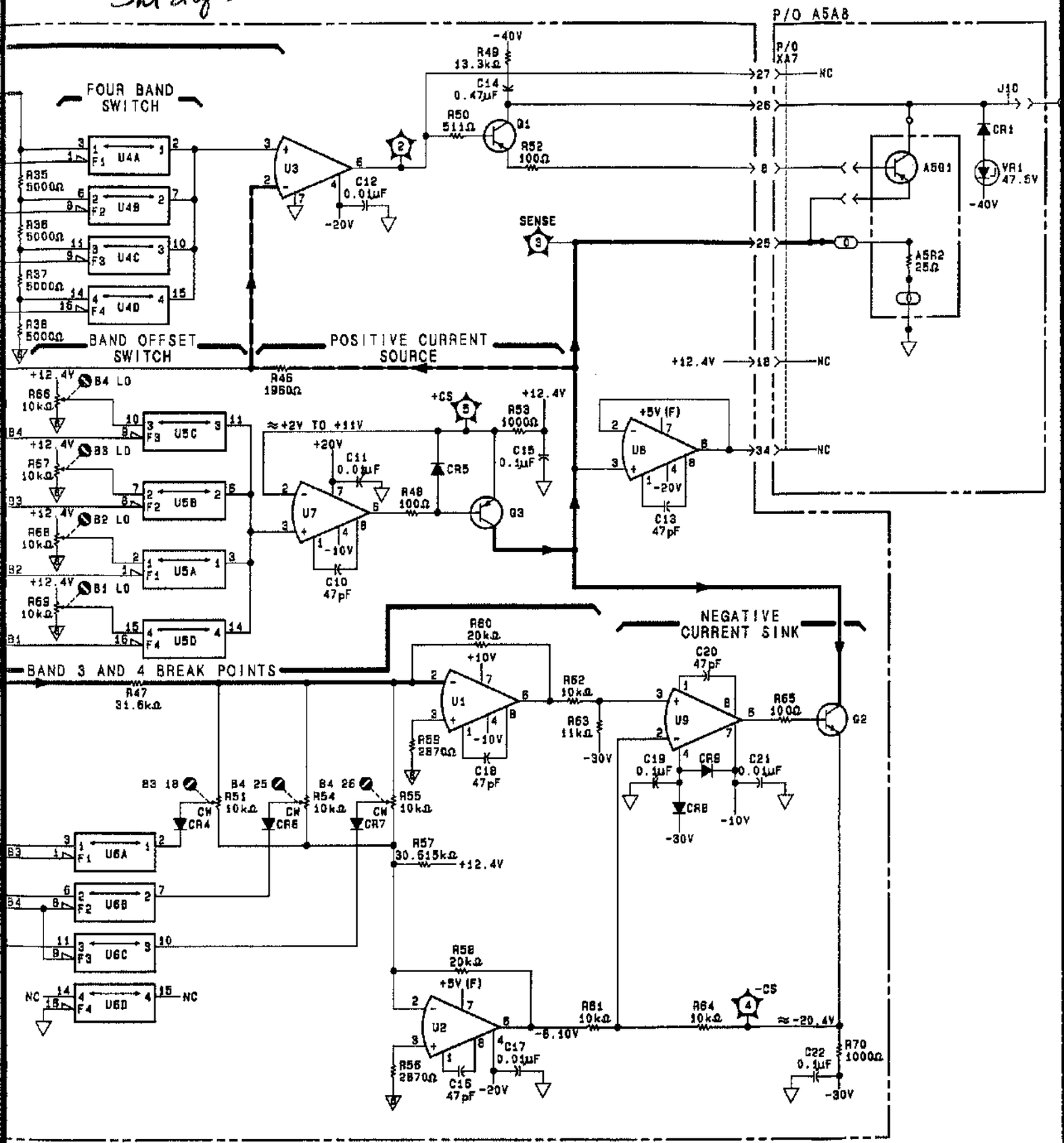


www.valuetronics.com

FIG. 8-283
SHT 3 of 3

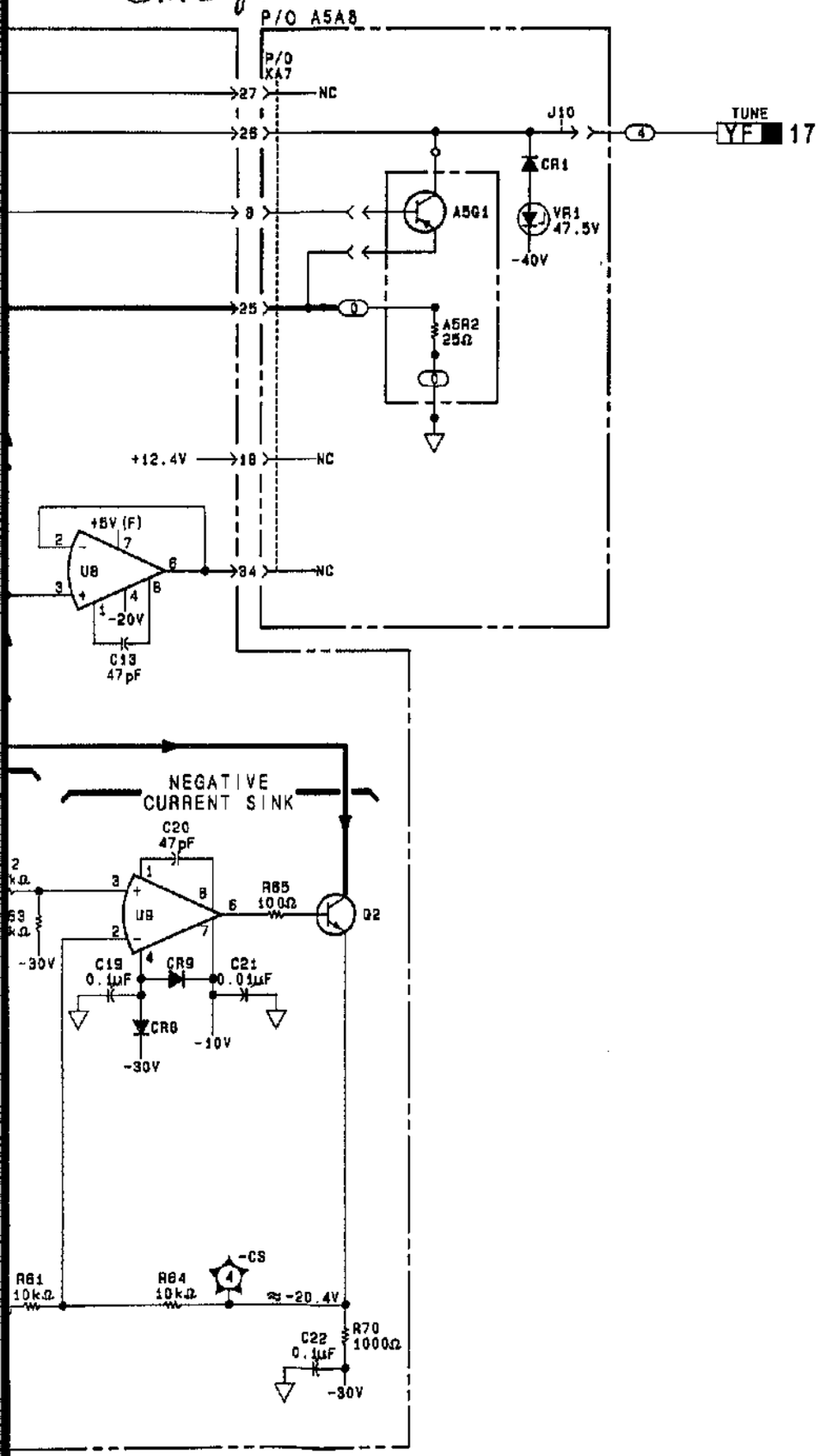


NOTES

1. REFER TO TABLE 8-1 FOR SCHEMATIC DIAGRAM NOTES.
2. POWER SUPPLY CONNECTIONS TO THE MOTHERBOARD ASSEMBLY ARE SHOWN ON SERVICE SHEET 35.

REFERENCE DESIGNATIONS

| NO PREFIX | A5A8 |
|---|---|
| A5Q1<br>A5R1 | CR1<br>J10<br>VR1<br>XA8 |
| **A5A7** | |
| C1-22<br>CR1-9<br>Q1-12<br>R1-70<br>TP1-6<br>U1-11<br>VR1-4 | |

TRANSISTOR AND INTEGRATED CIRCUIT PART NUMBERS

| REFERENCE DESIGNATION | PART NUMBER |
|---|---|
| A5A7 | |
| Q1 | 1853-0462 |
| Q2 | 1854-0637 |
| Q3, 12 | 1853-0459 |
| Q4, 8, 11 | 1854-0810 |
| Q5-7 | 1855-0020 |
| Q9 | 1853-0314 |
| Q10 | 1854-0475 |
| U1, 2, 7-11 | 1820-0223 |
| U3 | 1826-0229 |
| U4-6 | 1826-0582 |
| A5A8 | |
| Q1 | 1853-0344 |

INTEGRATED CIRCUIT VOLTAGE AND GROUND CONNECTIONS

| REFERENCE DESIGNATION | PIN NUMBER |
|---|---|
| U4 | +10V - 13<br>▽ - 5<br>-20V - 4 |
| U5, 6 | +20V - 13<br>▽ - 5<br>-10V - 4 |

3B
A5A7

Figure 8-283. A5 YIG Driver Assembly Schematic Diagram



www.valuetronics.com

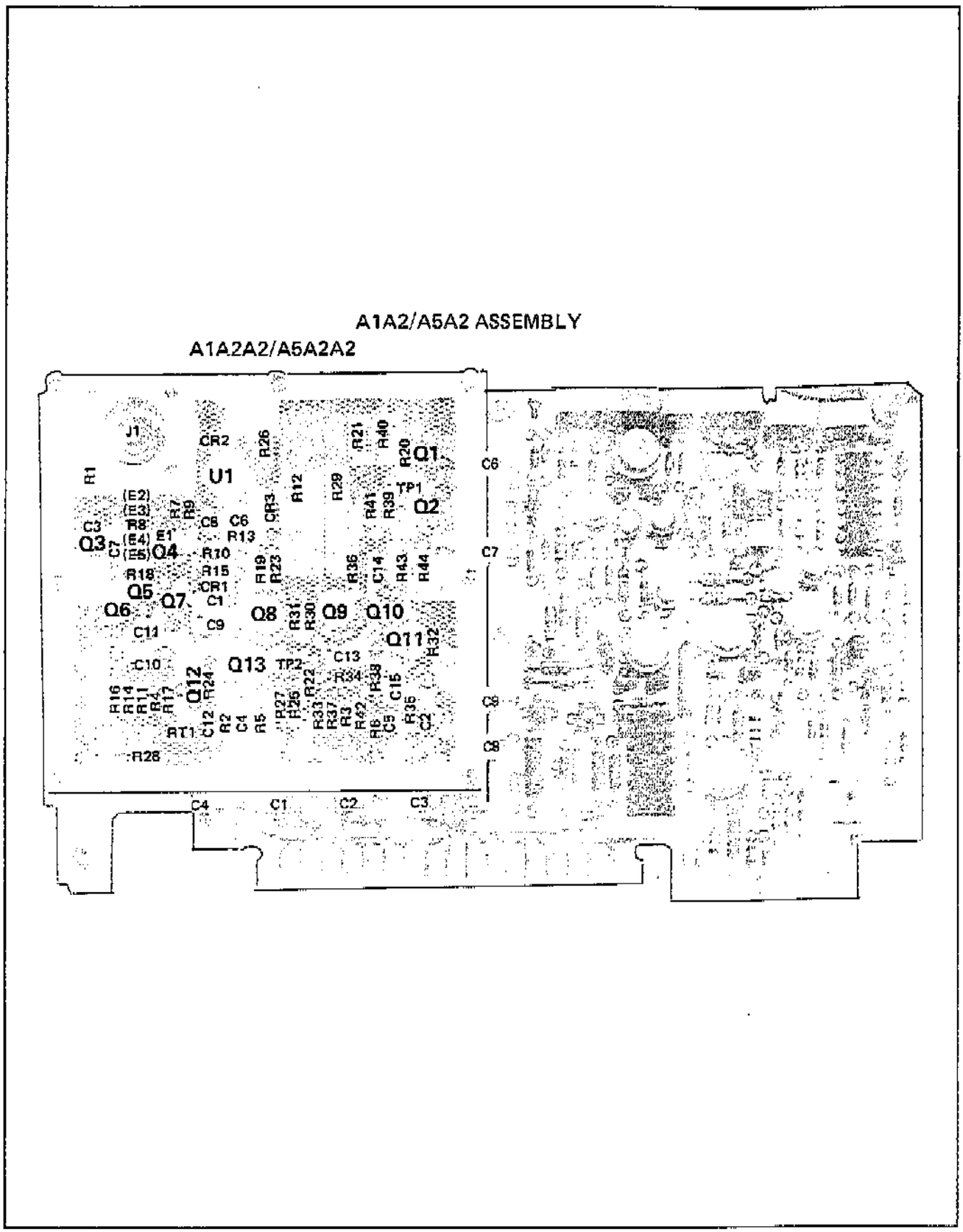


Figure 8-284. A5A2A2 Detector Board Assembly Component and Test Point Location



www.valuetronics.com

FIG. 8-285
Sht 1 of 2

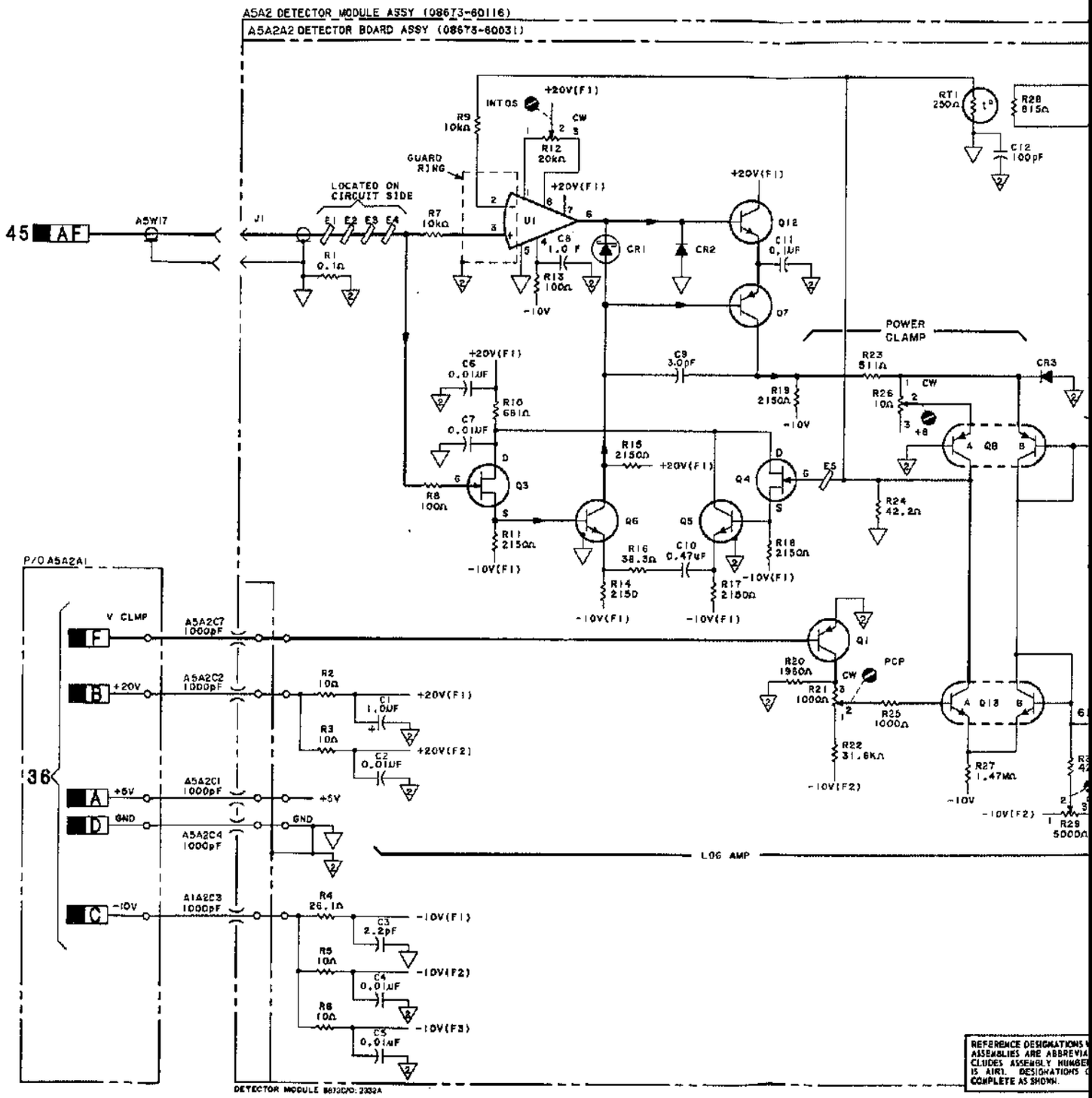


www.valuetronics.com

FIG. 8-285
Sht 2 of 2

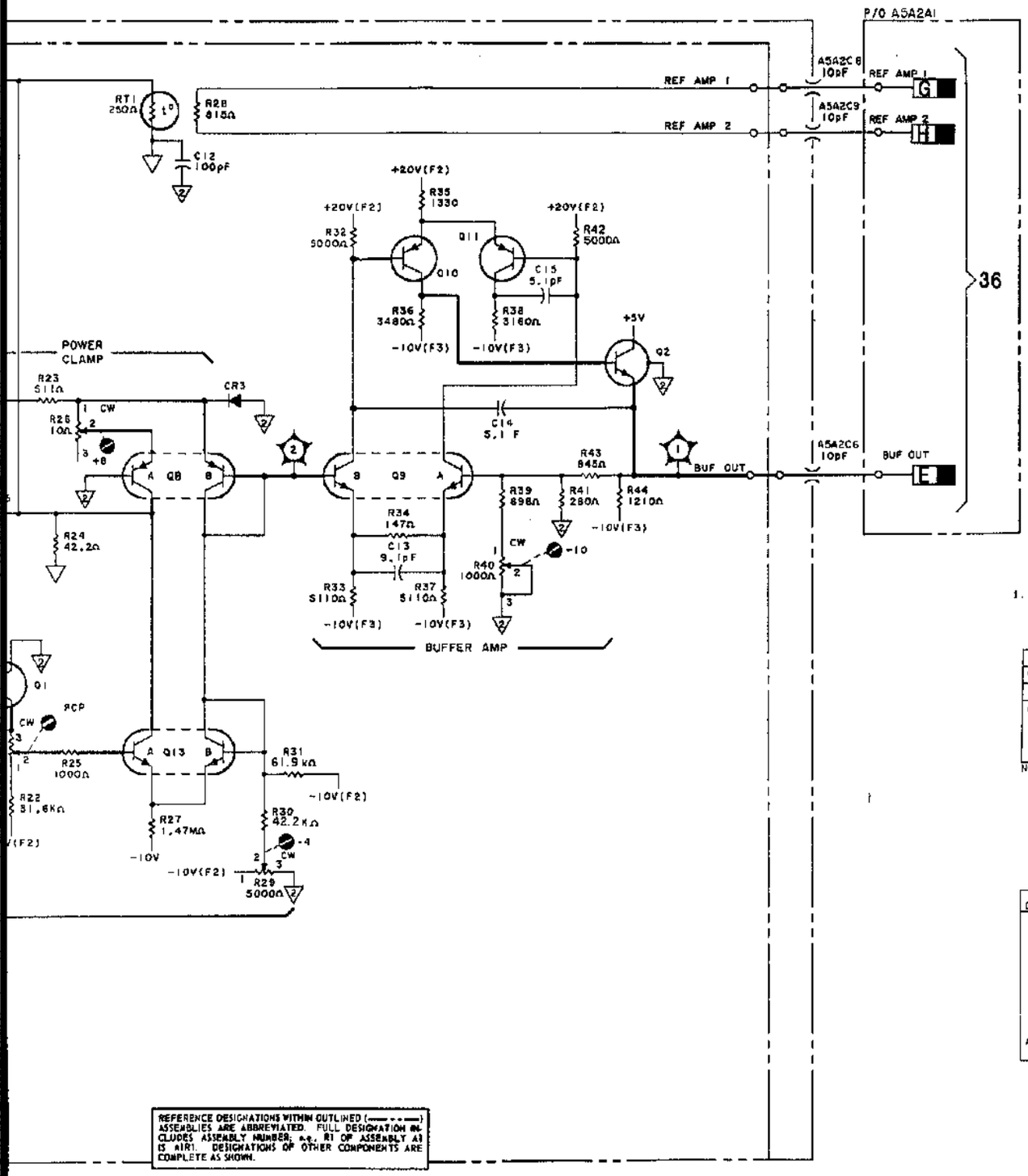


NOTES
1. REFER TO TABLE 8-1 FOR SCHEMATIC DIAGRAM NOTES.

REFERENCE DESIGNATIONS

| A6 | A6A2A2 |
|---|---|
| W17 | C1-15 |
| A5A2 | CR1-3 |
| | E1-5 |
| C1-4,6-9 | Q1-13 |
| | R1-44 |
| | RT1 |
| | TP1,2 |
| | U1 |

NOT ASSIGNED: A6A2C5

TRANSISTOR AND INTEGRATED CIRCUIT PART NUMBERS

| REFERENCE DESIGNATION | PART NUMBER |
|---|---|
| A6A2A2 | |
| Q1 | 1853-0459 |
| Q2, 5, 6 | 1854-0345 |
| Q3, 4 | 1855-0288 |
| Q7 | 1853-0405 |
| Q8 | 1853-0075 |
| Q9 | 1854-0475 |
| Q10, 11 | 1853-0451 |
| Q12 | 1854-0810 |
| Q13 | 1854-0295 |
| U1 | 1826-0471 |
| A1A14A1 | |
| U1 | 1826-0527 |

REFERENCE DESIGNATIONS WITHIN OUTLINED (— · · —) ASSEMBLIES ARE ABBREVIATED. FULL DESIGNATION INCLUDES ASSEMBLY NUMBER, e.g., R1 OF ASSEMBLY A1 IS A1R1. DESIGNATIONS OF OTHER COMPONENTS ARE COMPLETE AS SHOWN.

39

P/O A5A2, P/O A5A2A1, A5A2A2

**Figure 8-285. Detector Assembly Schematic Diagram**



www.valuetronics.com

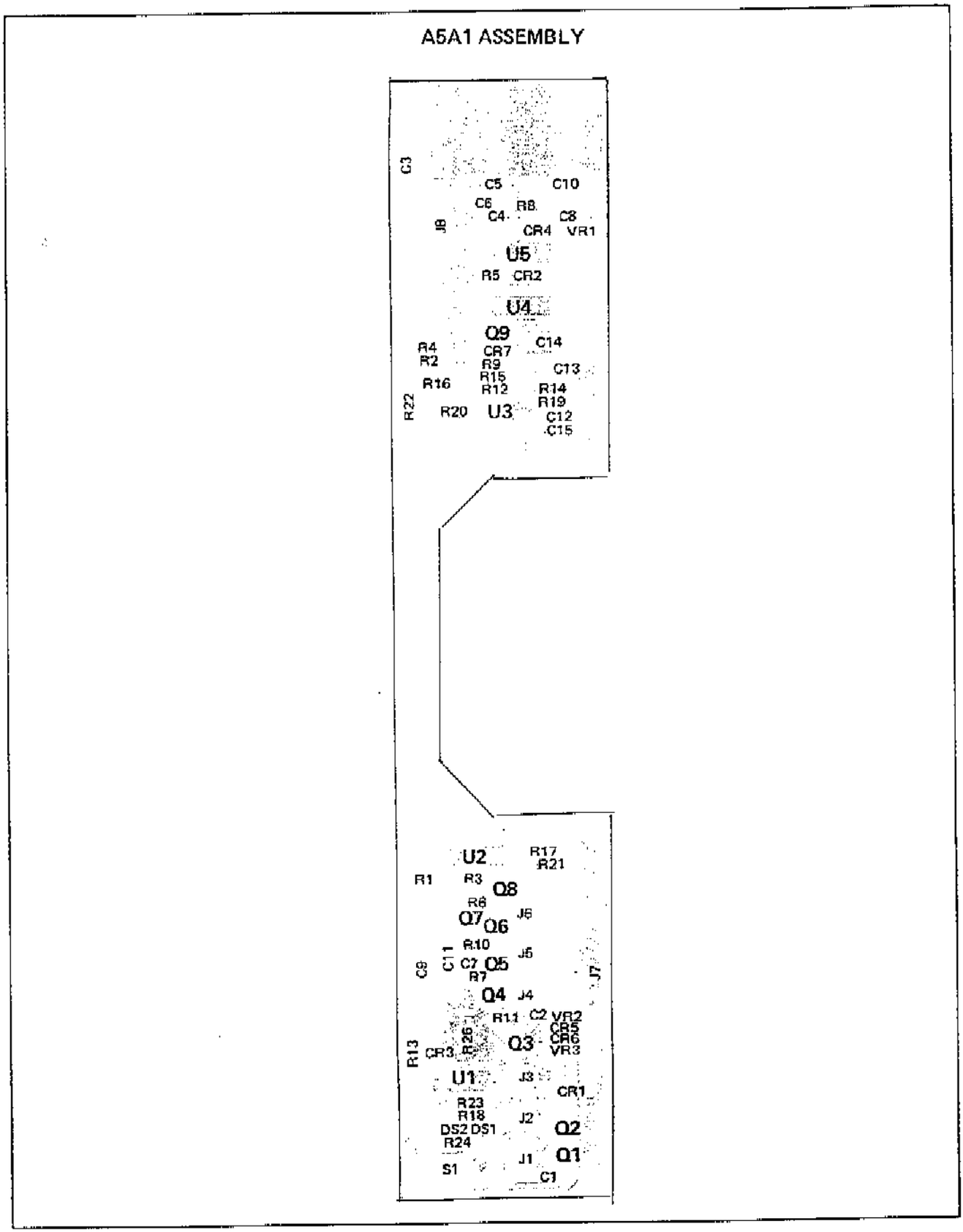


Figure 8-286. A5A1 Front Panel Assembly Component Location

8-2834

www.valuetronics.com

FIG. 8-287
Sht 1 of 3

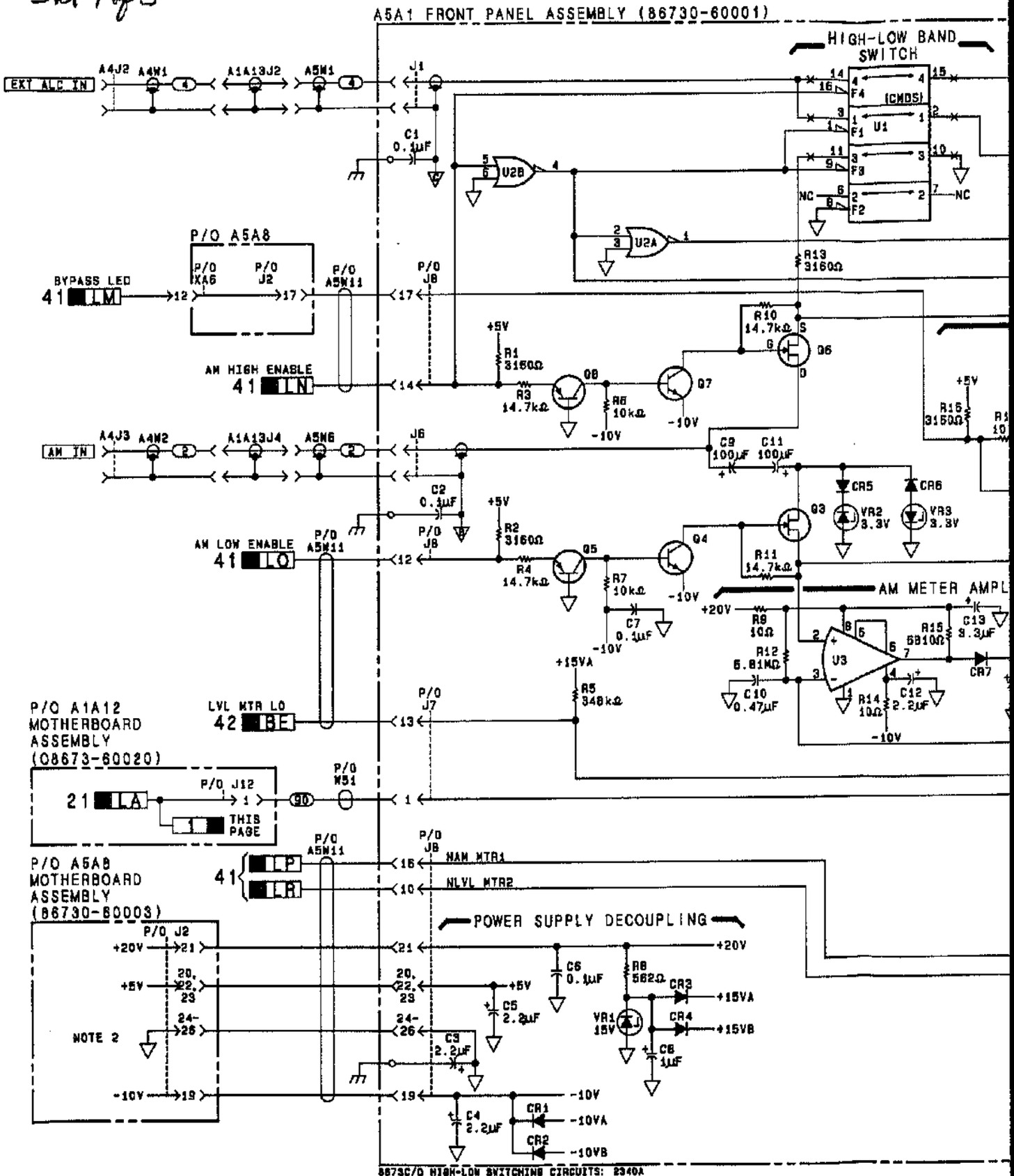


www.valuetronics.com

FIG. 8-287
Sht 2 of 3

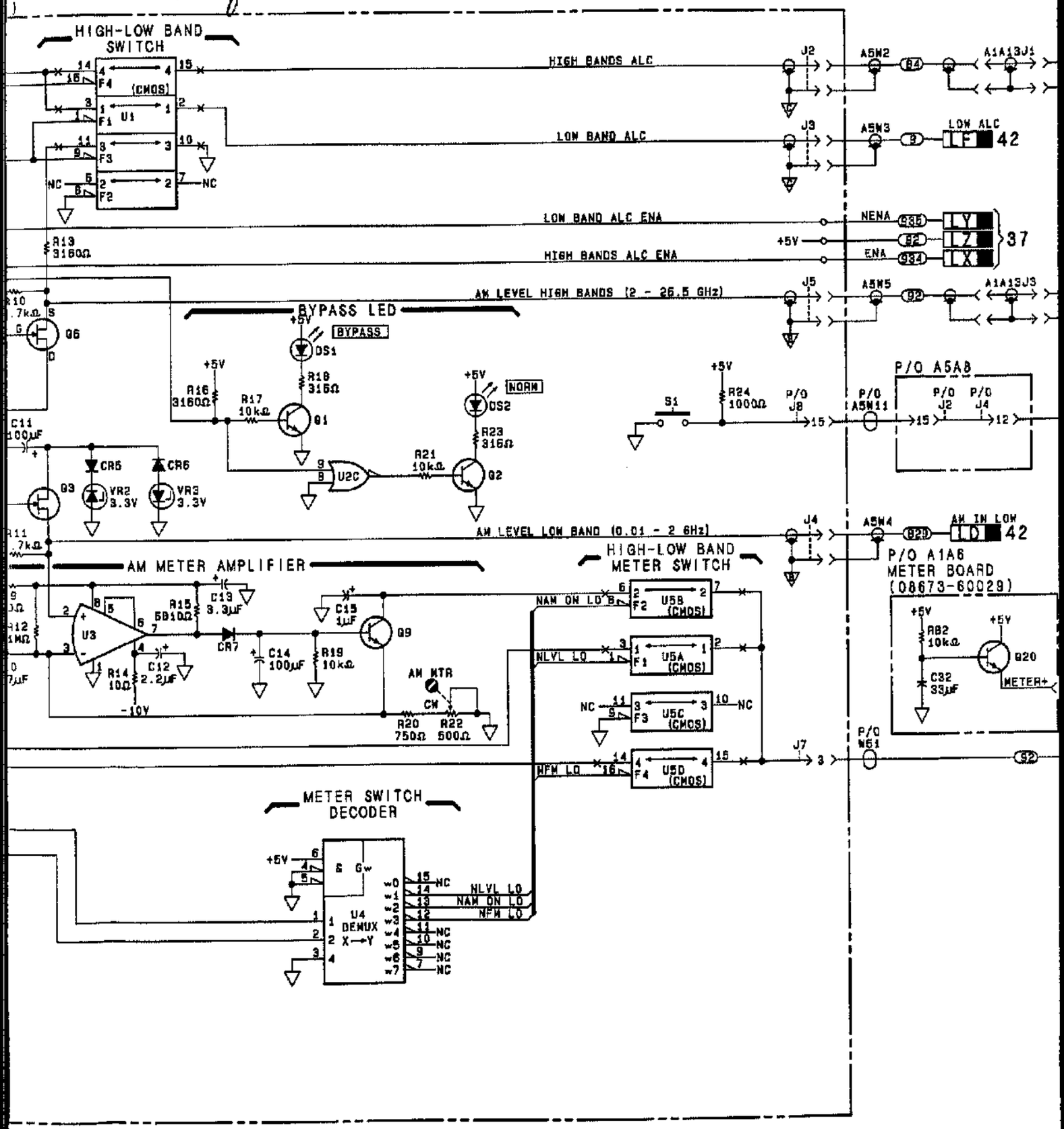


www.valuetronics.com

FIG. 8-287
SHT 3 of 3

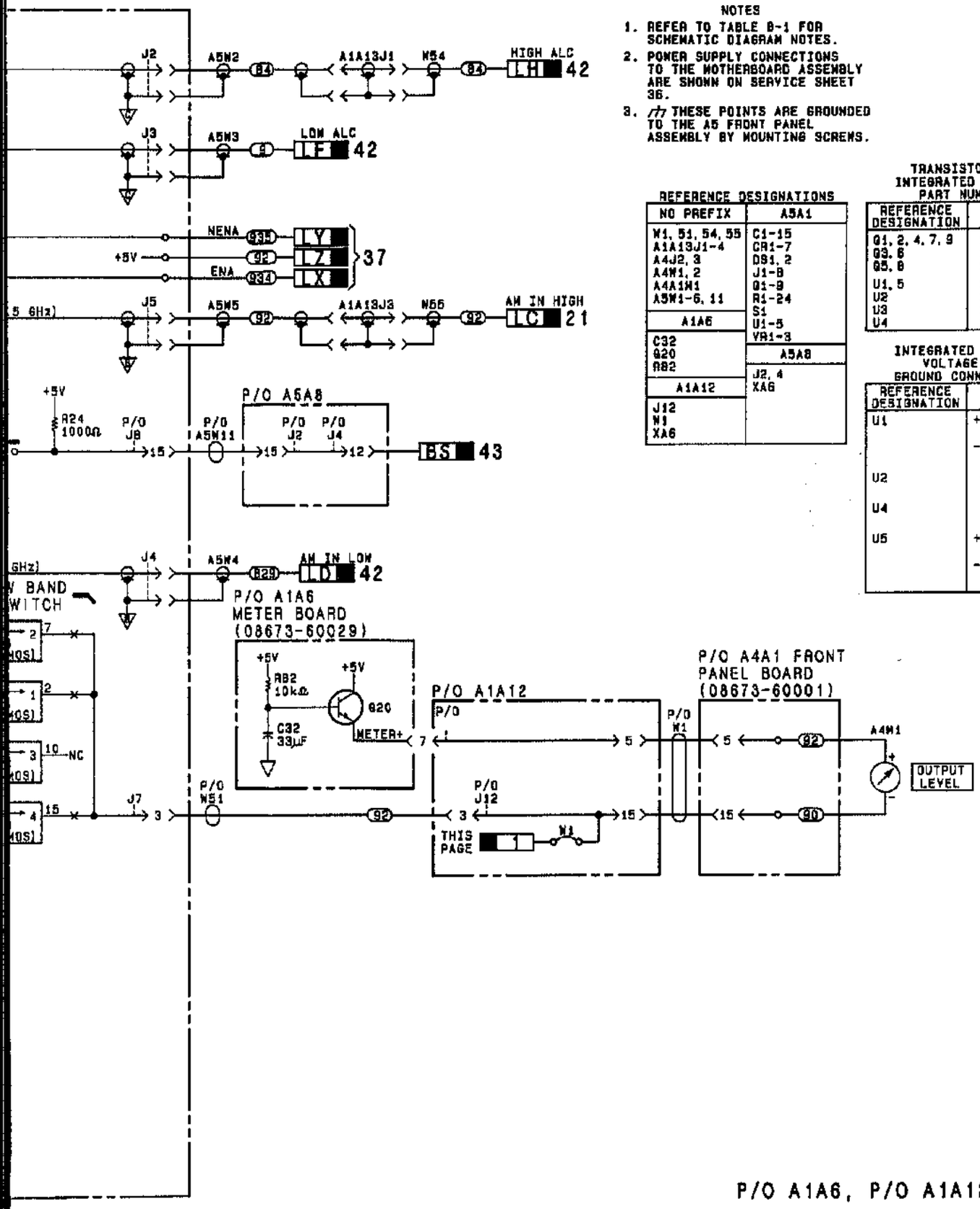


40

P/O A1A6, P/O A1A12, A5A1

Figure 8-287. A5 Front Panel Board Assembly Schematic Diagram



www.valuetronics.com

Service Shts 41-47

## Assemblies vs. Service Sheet List

| Assembly | Description | Ser.Sheet |
|---|---|---|
| A1A1 | Attenuator Driver Board Assembly | 18 |
| A1A2 | Detector Module Assembly | 14,17 |
| A1A2A1 | ALC Board Assembly | 14,17 |
| A1A2A2 | Detector Board Assembly | 17 |
| A1A3 | Function Board Assembly | 20 |
| A1A4 | Pulse Driver Board Assembly | 15 |
| A1A5 | DAC and Enable Board Assembly | 22 |
| A1A6 | Meter Board Assembly | 20,40 |
| A1A7 | YTM Driver Board Assembly | 16 |
| A1A8 | SRD Bias Board Assembly | 19 |
| A1A9 | Preamp Assembly | 14,16 |
| A1A10 | YTM Assembly | 16 |
| A1A10A1 | YIG Heater Control Assembly | 16 |
| A1A11 | Power Amplifier Assembly | 16 |
| A1A12 | Motherboard Assembly | 14-16,18-22, 30,31,40 |
| A1A13 | Terminal Strip | 37 |
| A1A14 | Amp Bias Board Assembly | 17 |
| A2A1 | Panel Driver Board Assembly | 25 |
| A2A2 | Key Code Board Assembly | 24 |
| A2A3 | VCO Assembly | 8 |
| A2A4 | Phase Detector Assembly | 7 |
| A2A5 | Divider Assembly 20/30 | 6 |
| A2A6 | Not Assigned | |
| A2A7 | I/O Board Assembly | 30,31 |
| A2A8 | Microprocessor Board Assembly | 26 |
| A2A9 | Frequency/HP-IB Board Assembly | 29 |
| A2A10 | RAM Board Assembly | 28 |
| A2A11 | ROM Board Assembly | 27 |
| A2A13 | Motherboard Assembly | 6-8,10, 20-32 |
| A2A14 | Rear Interconnect Board Assembly | 24,29, 31 |
| A2A15 | HP-IB Connector Board Assembly | 29 |
| A3A1 | Rectifier Assembly | 33 |
| A3A1A1 | Reference Phase Detector Assembly | 1,2 |
| A3A1A2 | 100 MHz VCXO Assembly | 2 |
| A3A1A3 | M/N Phase Detector Assembly | 3 |
| A3A1A4 | M/N VCO Assembly | 4 |
| A3A1A4A1 | VCO Resonator | 4 |
| A3A1A4A2 | VCO Board Assembly | 4 |
| A3A1A5 | M/N Output Assembly | 5 |
| A3A1A6 | M/N Reference Motherboard Assembly | 1-3,5 |
| A3A1A7 | Reference Housing Assembly | |
| A3A2 | Not Assigned | |
| A3A3 | Positive Regulator Assembly | 34 |
| A3A4 | Negative Regulator Assembly | 35 |
| A3A5 | DAC Assembly | 9 |
| A3A6 | YTO Driver Assembly | 10 |
| A3A7 | FM Driver Assembly | 13 |
| A3A8 | 10 MHz Reference Oscillator | 1 |
| A3A9 | YTO Loop Assembly | 11,12 |
| A3A9A1 | Directional Coupler Assembly | 13 |
| A3A9A2 | YTO Interconnect Assembly | 11-13 |
| A3A9A3 | 2.0 - 6.6 GHz YTO Assembly | 13 |
| A3A9A4 | YTO Phase Detector Assembly | 12 |
| A3A9A5 | Sampler Assembly | 11 |
| A3A9A6 | Attenuator Assembly | 13 |
| A3A9A7 | 6.2 GHz Low Pass Filter | 13 |
| A3A10 | Motherboard Assembly | 1,3,6,10, 12-14,21-23 26, 29-31, 33-35 |
| A4A1 | Front Panel Board Assembly | 20,22, 23,32,40 |
| A5A1 | Front Panel Board Assembly | 41,42,44 |
| A5A2 | Detector Module Assembly | 36,39 |
| A5A2A1 | ALC Board Assembly | 36,39 |
| A5A2A2 | Detector Board Assembly | 39 |
| A5A3 | Function Board Assembly | 42 |
| A5A4 | Pulse Driver Board Assembly | 37 |
| A5A5 | DAC and Enable Board Assembly | 44 |
| A5A6 | Switch Driver Board Assembly | 36,41 |
| A5A7 | YTM Driver Board Assembly | 38 |
| A5A8 | Motherboard Assembly | 36-38,40-44, 46,47 |
| A5A9 | Microprocessor Board Assembly | 43 |
| A5A10 | Power Supply Board Assembly | 45-47 |
| A5A11 | Regulator 2 Board Assembly | 46 |
| A5A12 | Regulator 1 Board Assembly | 46,47 |
| A5A13 | Pulse Input Assembly | 37 |
| A5A13A1 | Pulse Input Switch Board Assembly | 37 |

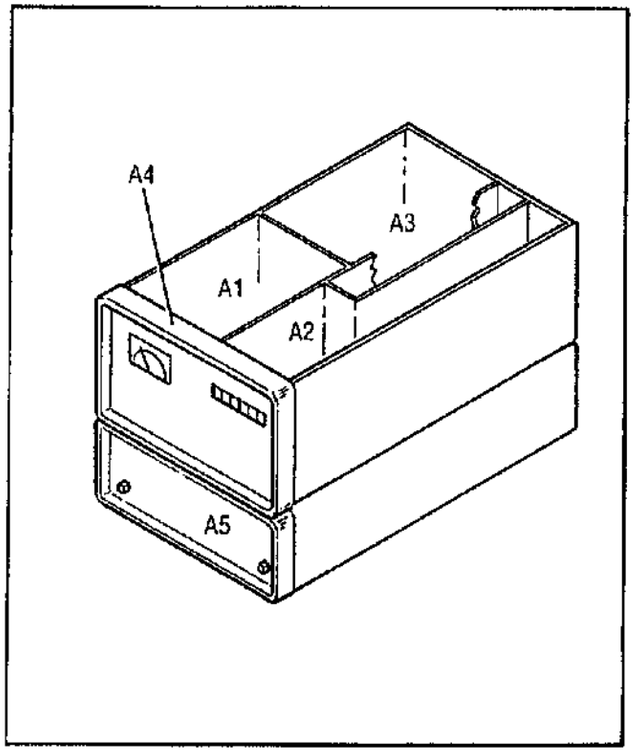


**Major Assemblies**

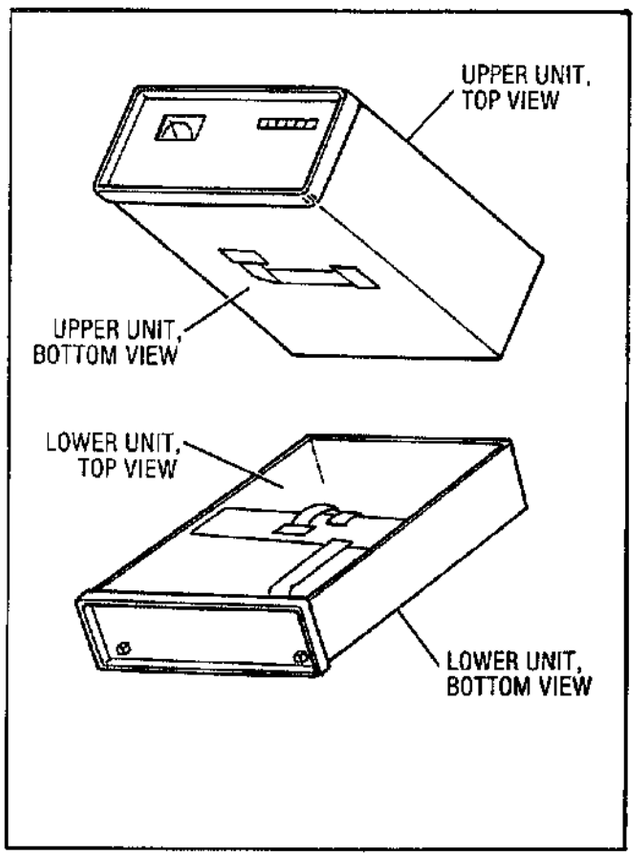


**Internal View Identification**

www.valuetronics.com

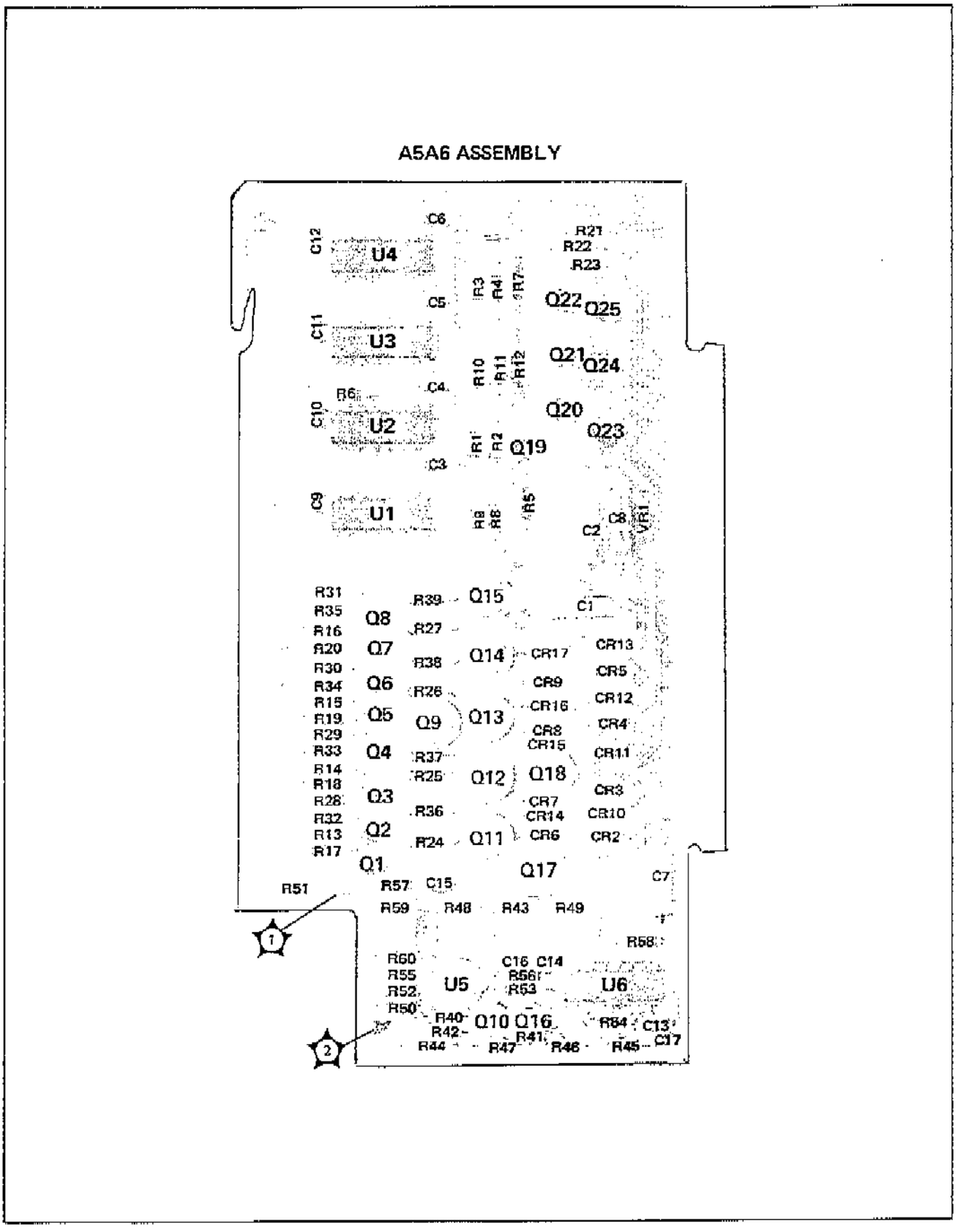


Figure 8-288. A5A6 Switch Driver Assembly Component and Test Point Location

8-285a

www.valuetronics.com

FIG. 8-289
Sht 1 of 3

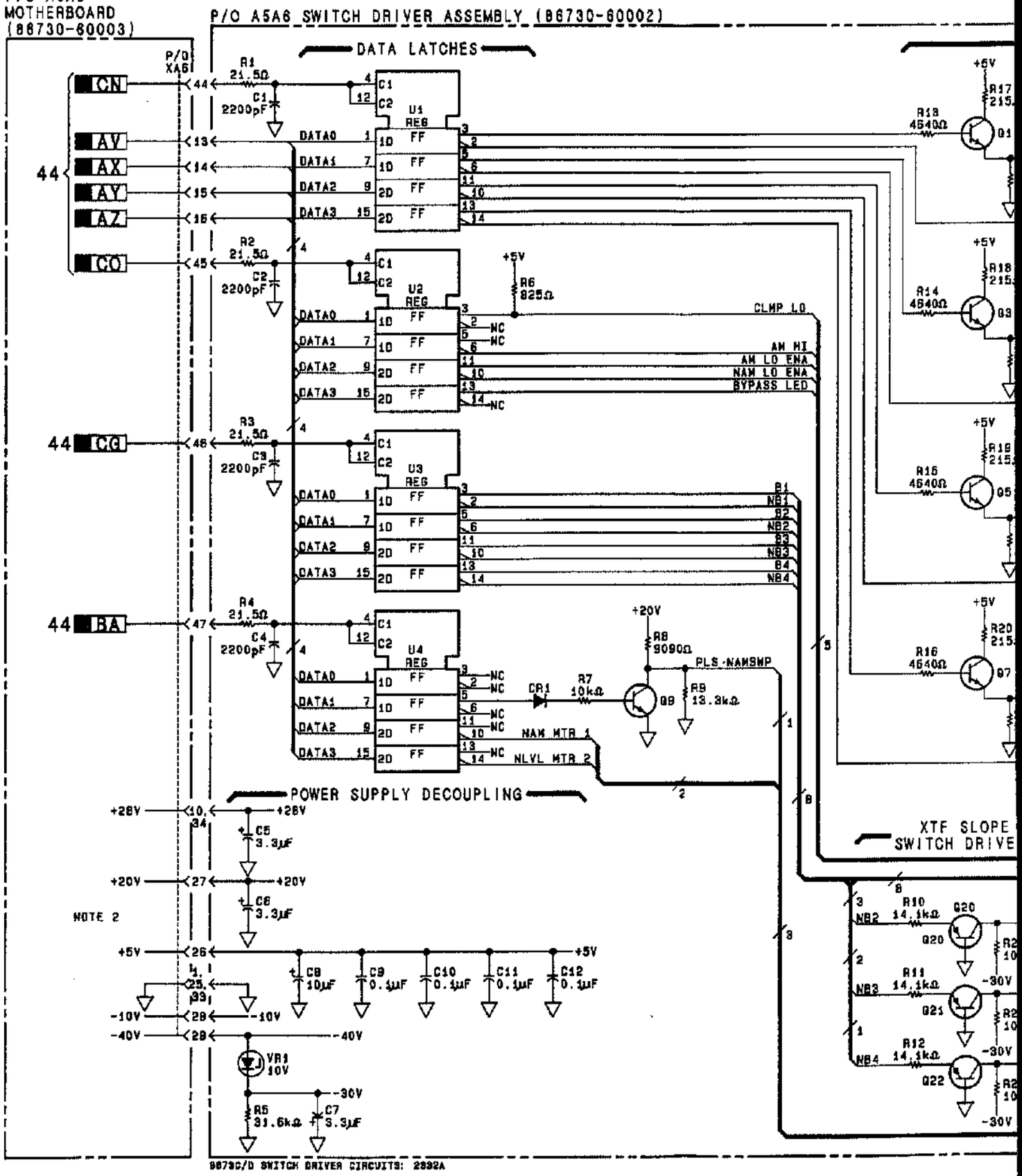


9873C/D SWITCH DRIVER CIRCUITS: 2332A

www.valuetronics.com

FIG. 8-289
Sht 2 of 3

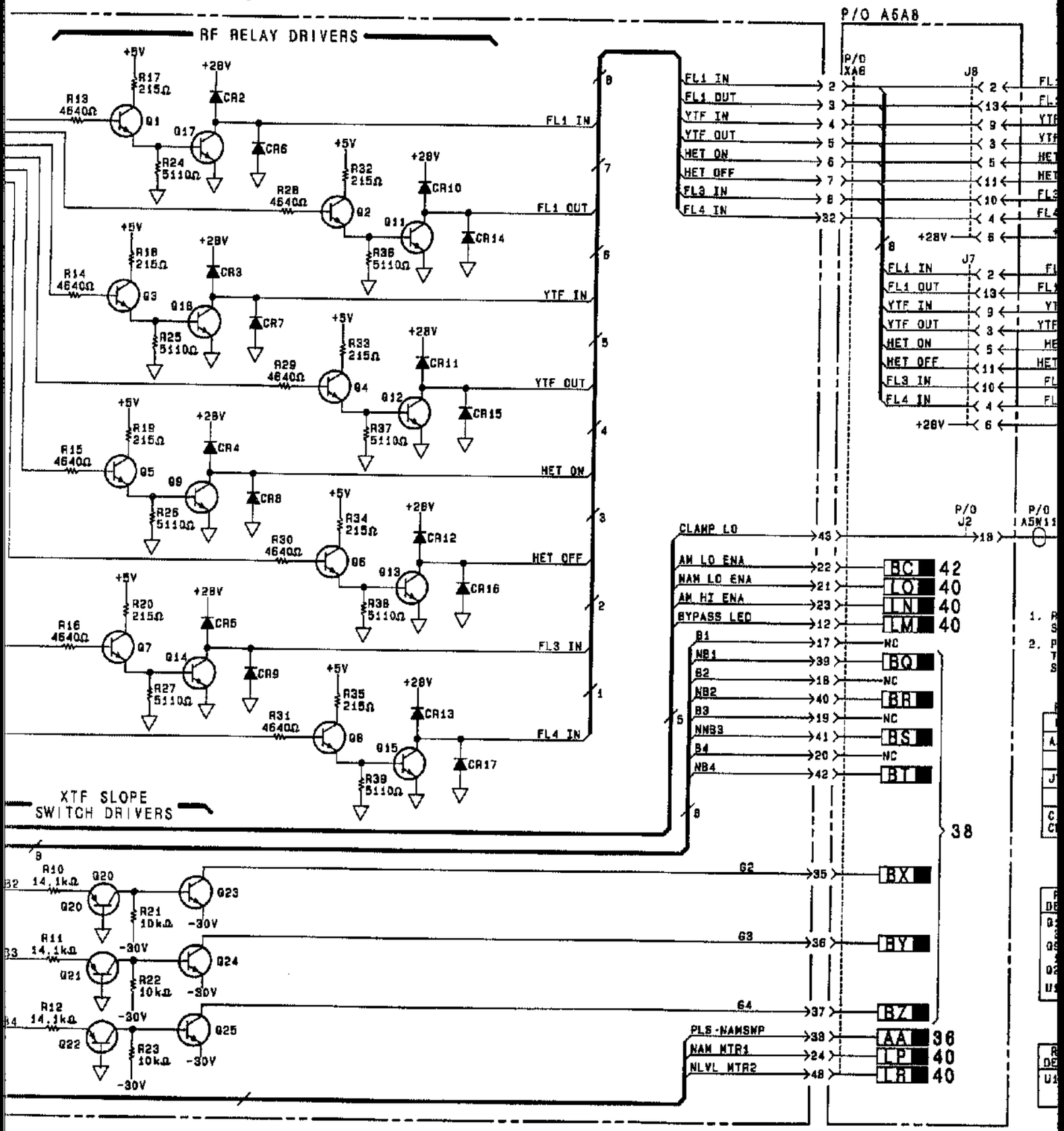


Figure 8-289. Sw

www.valuetronics.com

FIG. 8-289
Sht 3 of 3

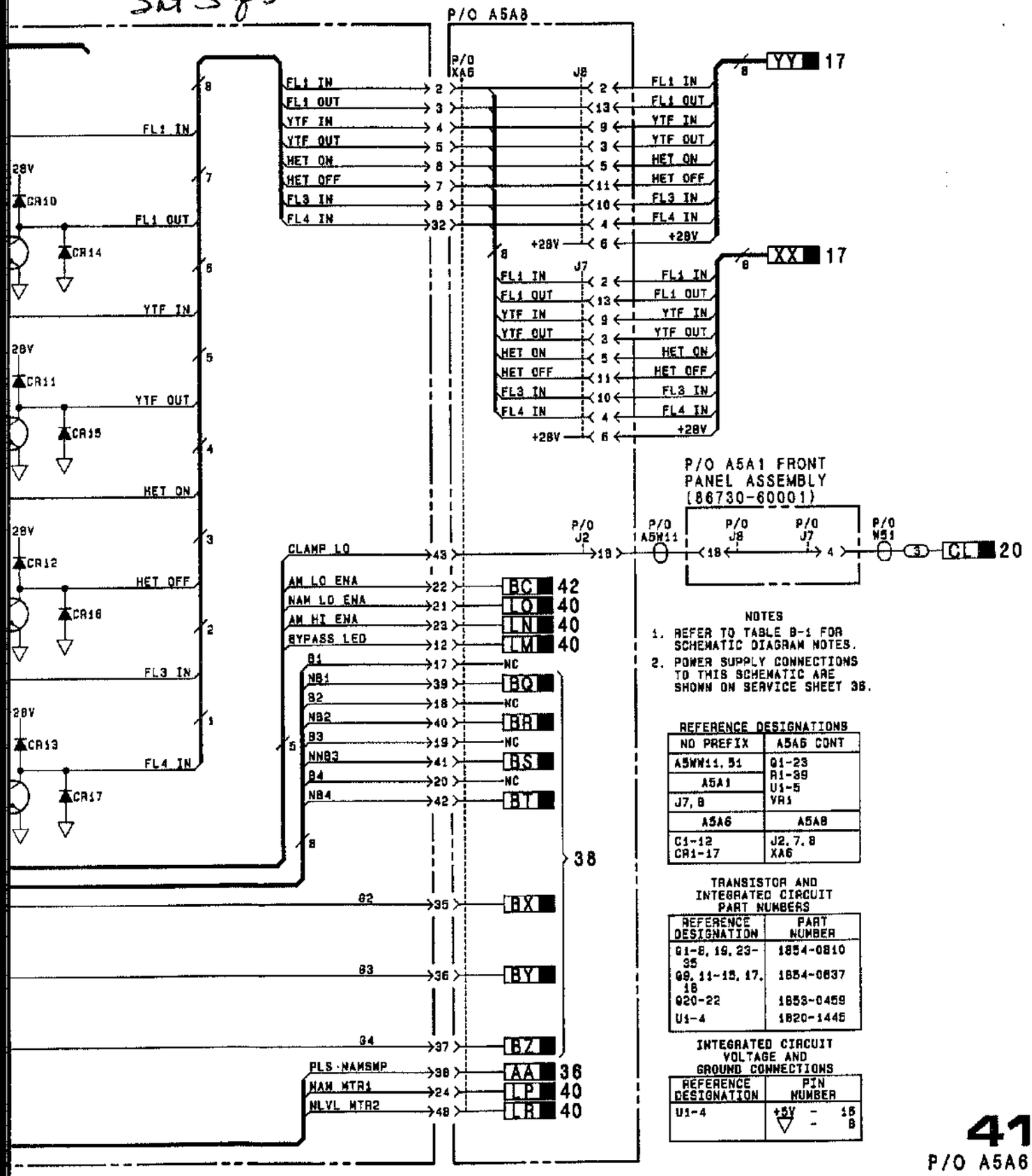


NOTES

1. REFER TO TABLE 8-1 FOR SCHEMATIC DIAGRAM NOTES.
2. POWER SUPPLY CONNECTIONS TO THIS SCHEMATIC ARE SHOWN ON SERVICE SHEET 36.

REFERENCE DESIGNATIONS

| NO PREFIX | A5A6 CONT |
|---|---|
| A5MW11, 51 | Q1-23 |
| A5A1 | R1-39 |
| | U1-5 |
| J7, 8 | VR1 |
| A5A6 | A5A8 |
| C1-12 | J2, 7, 8 |
| CR1-17 | XA6 |

TRANSISTOR AND INTEGRATED CIRCUIT PART NUMBERS

| REFERENCE DESIGNATION | PART NUMBER |
|---|---|
| Q1-8, 19, 23-35 | 1854-0810 |
| Q9, 11-13, 17, 18 | 1854-0637 |
| Q20-22 | 1853-0459 |
| U1-4 | 1820-1445 |

INTEGRATED CIRCUIT VOLTAGE AND GROUND CONNECTIONS

| REFERENCE DESIGNATION | PIN NUMBER |
|---|---|
| U1-4 | +5V - 16<br>⏚ - 8 |

41
P/O A5A6

Figure 8-289. Switch Driver Board Assembly Schematic Diagram



www.valuetronics.com

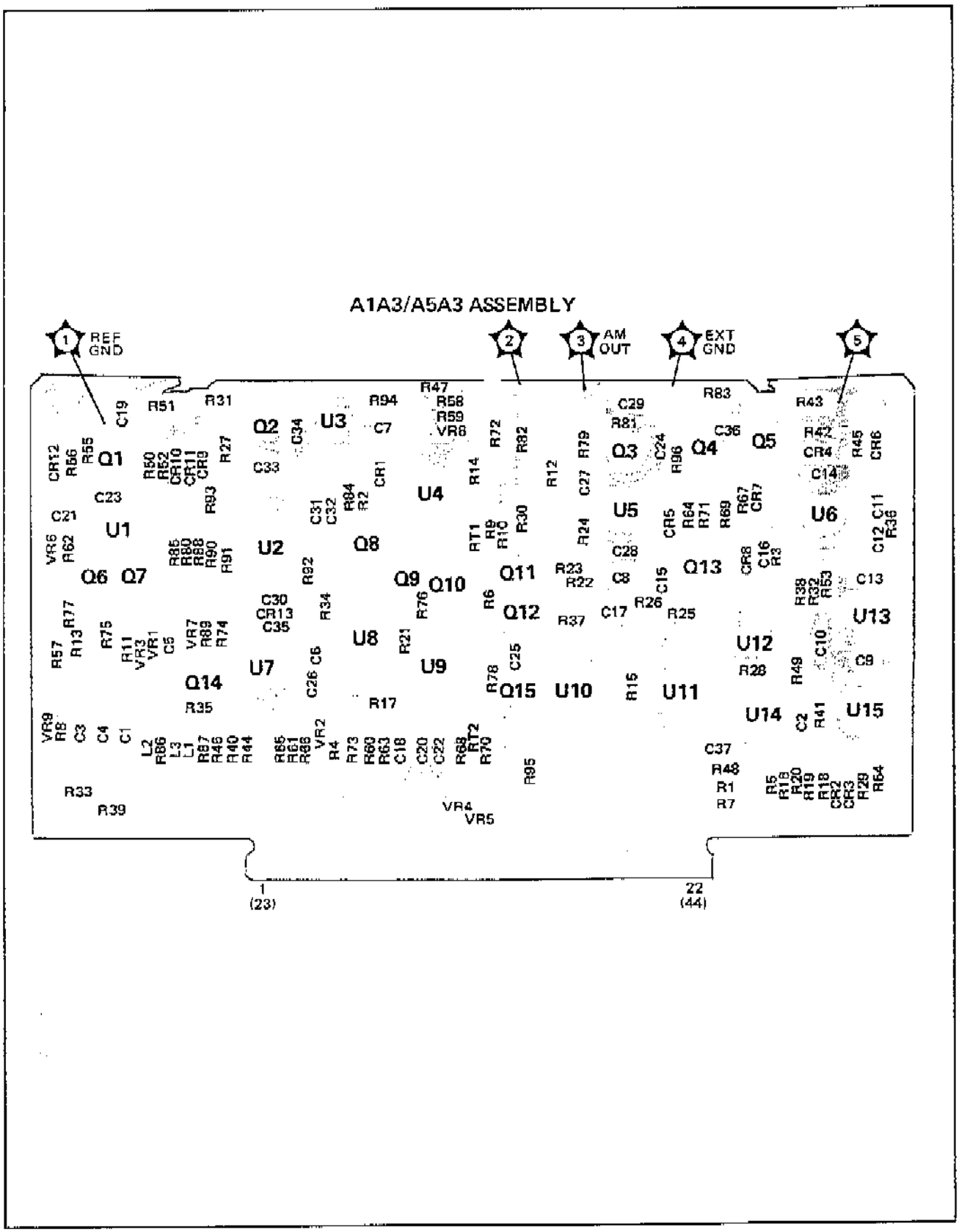


Figure 8-290. A5A3 Function Board Assembly Component and Test Point Location

8-287a

www.valuetronics.com

FIG. 8-291
SHT 1 of 4

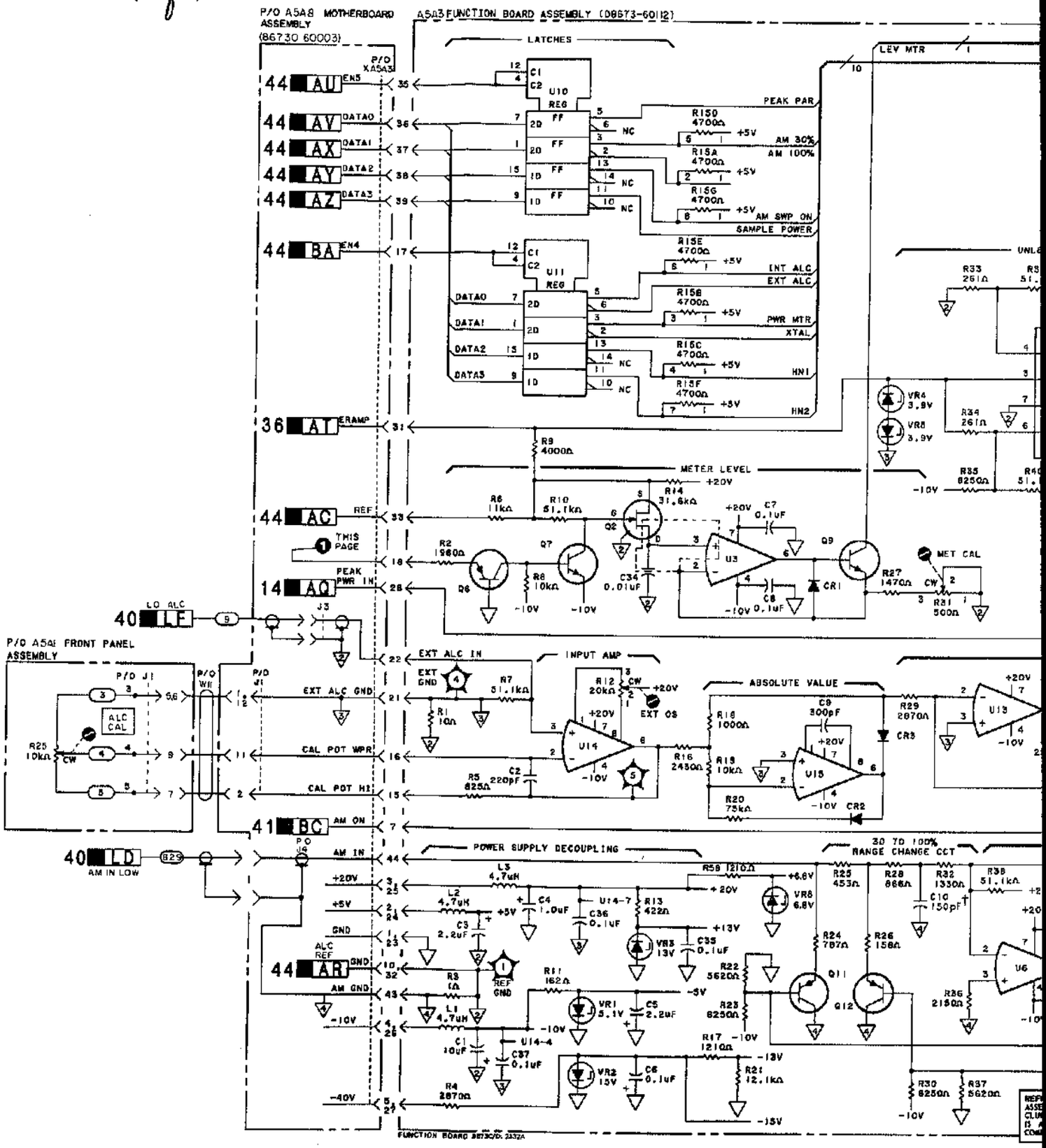


www.valuetronics.com

FIG. 8-291
Sht 2 of 4

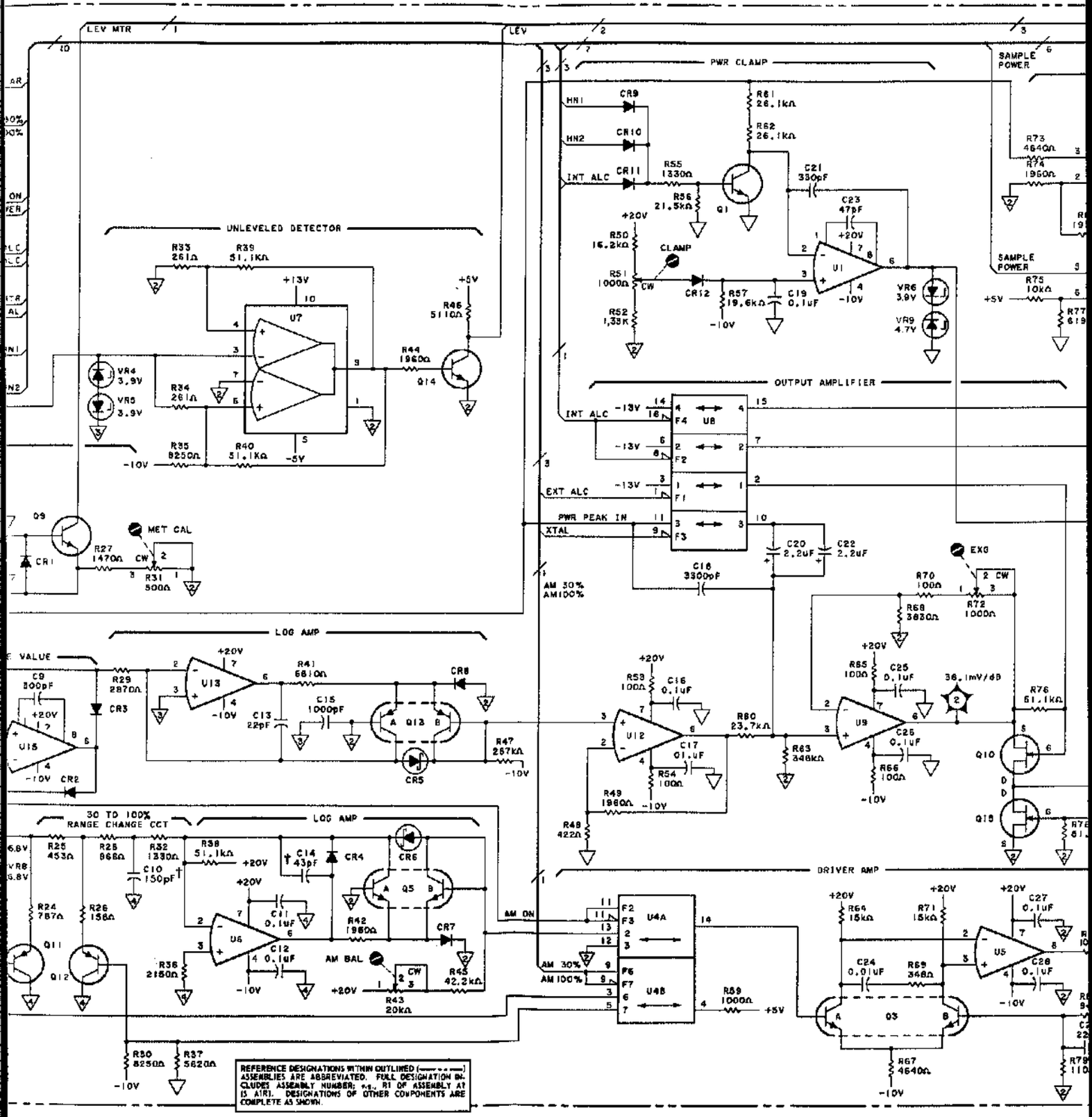


www.valuetronics.com

FIG. 8-291
SHT 3 of 4

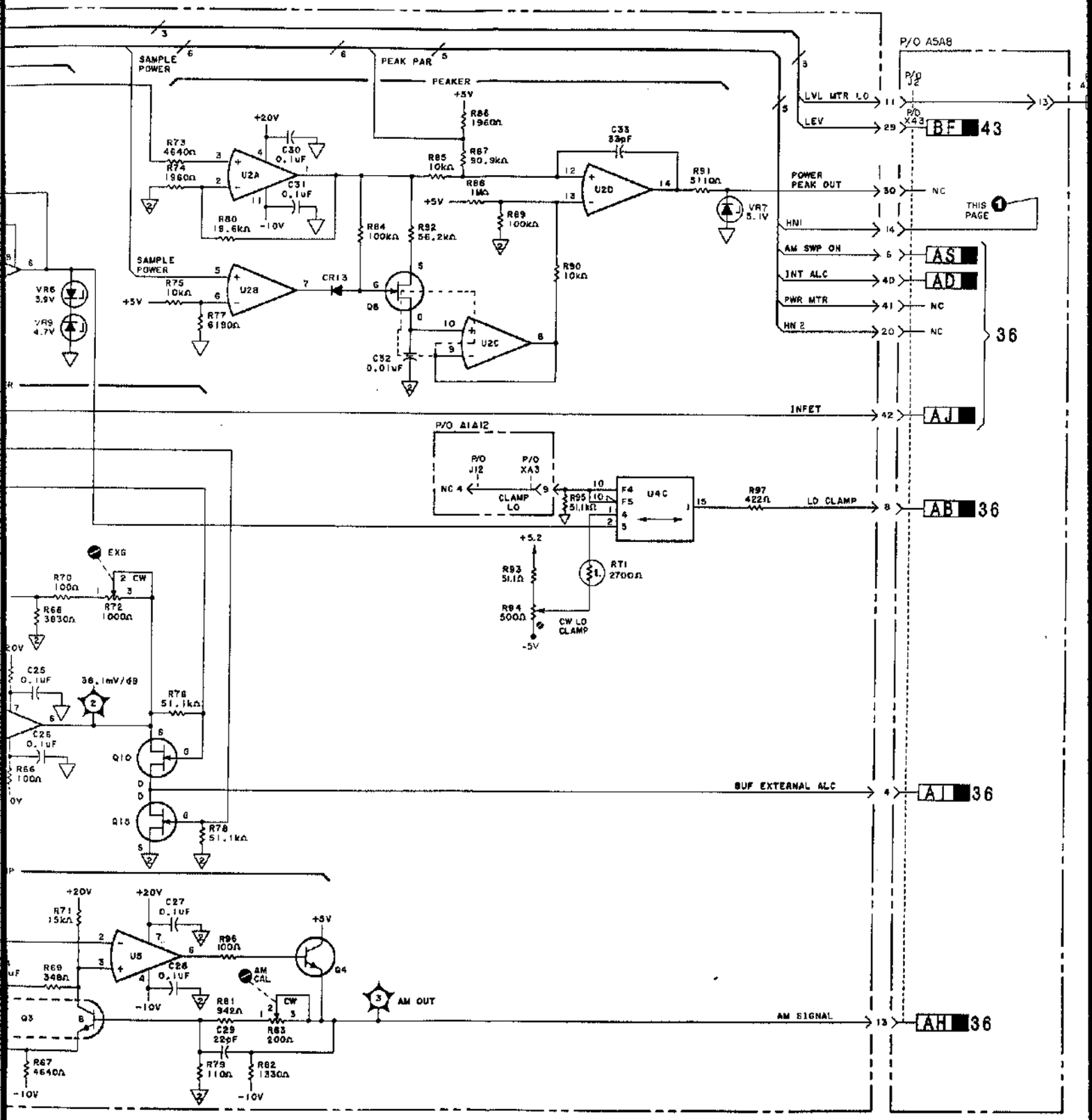


Figure 8-291. A5 Function Board Assem

www.valuetronics.com

FIG. 8-291
SHT 4 of 4

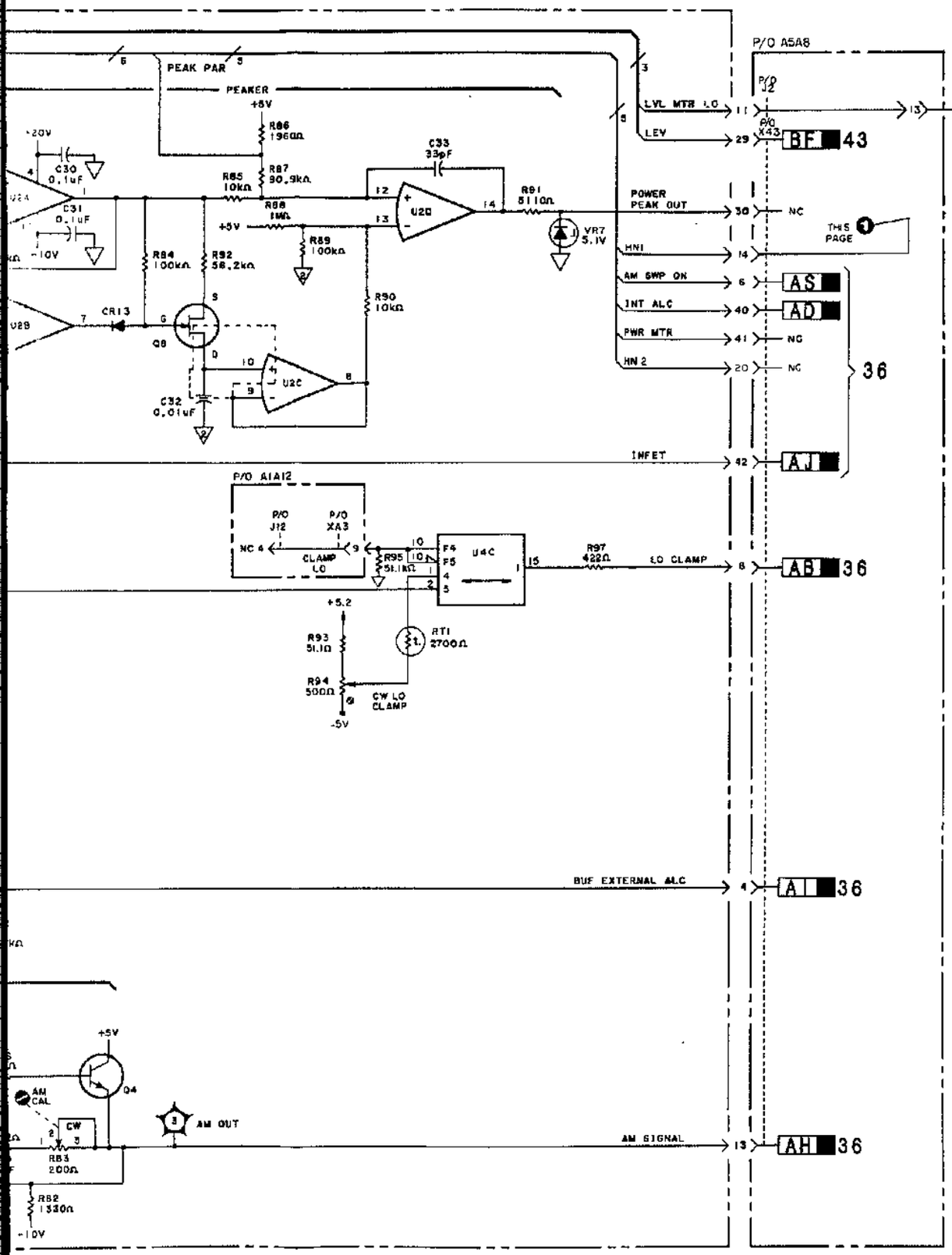


NOTES
1. REFER TO TABLE 8-1 FOR SCHEMATIC DIAGRAM NOTES.
2. POWER SUPPLY CONNECTIONS TO THE MOTHERBOARD ASSEMBLY ARE SHOWN ON SERVICE SHEET 1-A3.

† BACKDATING INFORMATION IN SECTION VII.

REFERENCE DESIGNATIONS

| A1A3 | A5A8 |
|---|---|
| C1-37 | XA3 |
| CR1-13 | J10, 12 |
| | A5A1 |
| L1-3 | |
| Q1-15 | J1 |
| R1-95 | M1 |
| U1-15 | |
| VR1-8 | |
| RT1 | |

W5 NOT ASSIGNED

TRANSISTOR AND INTEGRATED CIRCUIT PART NUMBERS

| REFERENCE DESIGNATION | PART NUMBER |
|---|---|
| Q1, 4, 7, 9, 14 | 1854-0810 |
| Q2 | 1855-0827 |
| Q3 | 1854-0830 |
| Q5 | 1854-0475 |
| Q6 | 1853-0459 |
| Q8 | 1855-0414 |
| Q10, 15 | 1855-0253 |
| Q11, 12 | 1853-0322 |
| Q13 | 1853-0316 |
| U1, 15 | 1826-0059 |
| U2 | 1826-0600 |
| U3, 12 | 1826-0520 |
| U4 | 1826-0501 |
| U5, 8, 9, 13 | 1826-0493 |
| U7 | 1820-0125 |
| U8 | 1826-0582 |
| U10, 11 | 1820-1445 |
| U14 | 1826-0471 |

INTEGRATED CIRCUIT VOLTAGE AND GROUND CONNECTIONS

| REFERENCE DESIGNATION | PIN NUMBER |
|---|---|
| U4 | +6.8V - 16 |
| | -5V - 7 |
| | ▽ - 6, 8 |
| U8 | +13V - 13 |
| | -15V - 4 |
| | ▽ - 5 |
| U10, 11 | +5V - 16 |
| | ▽ - 8 |

**42**
**A5A3, P/O A5A1**

Figure 8-291. A5 Function Board Assembly Schematic Diagram



www.valuetronics.com

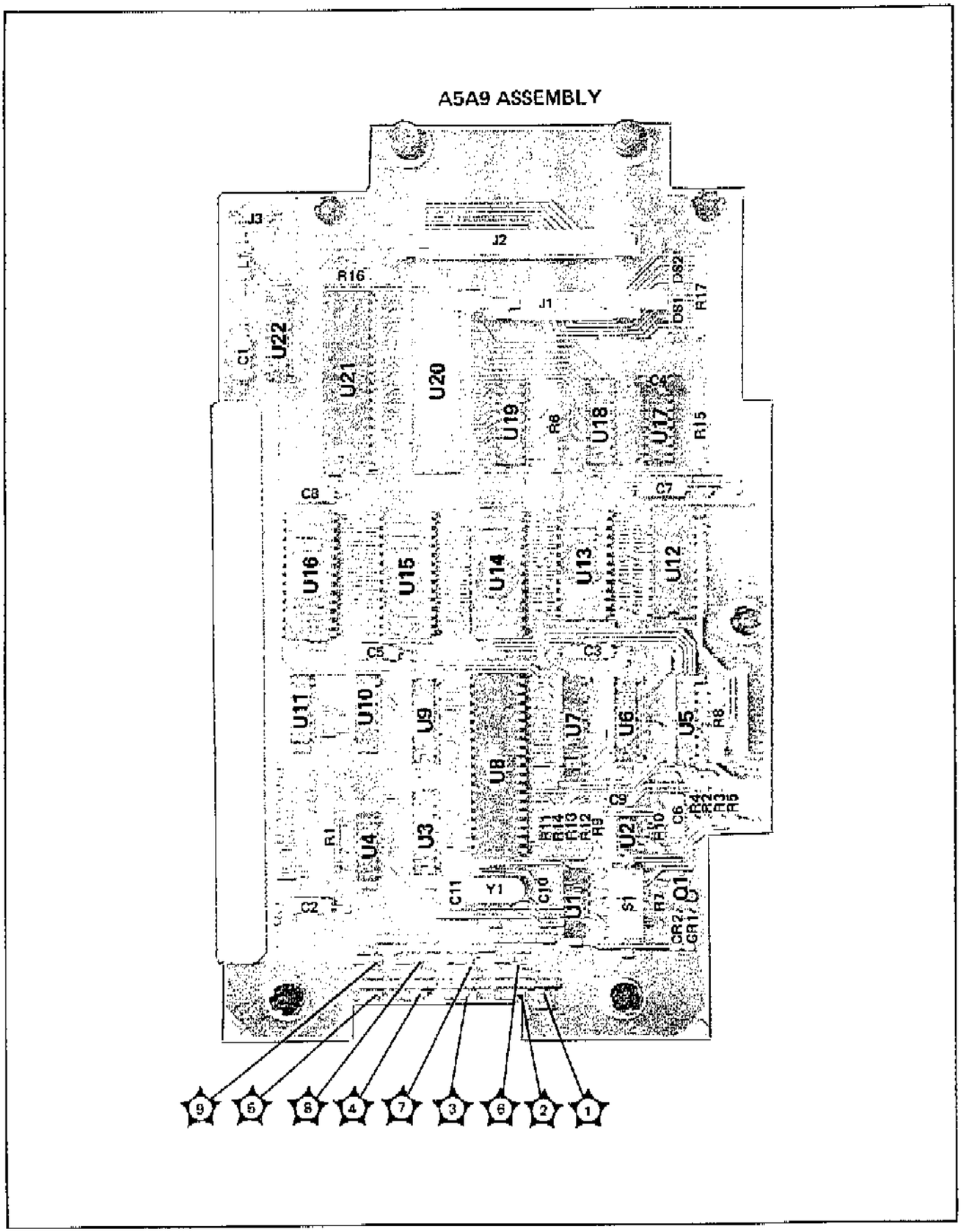


Figure 8-292. A5A9 Microprocessor Assembly Component and Test Point Location

8-289a

www.valuetronics.com

FIG. 8-293
SHT 1 of 4

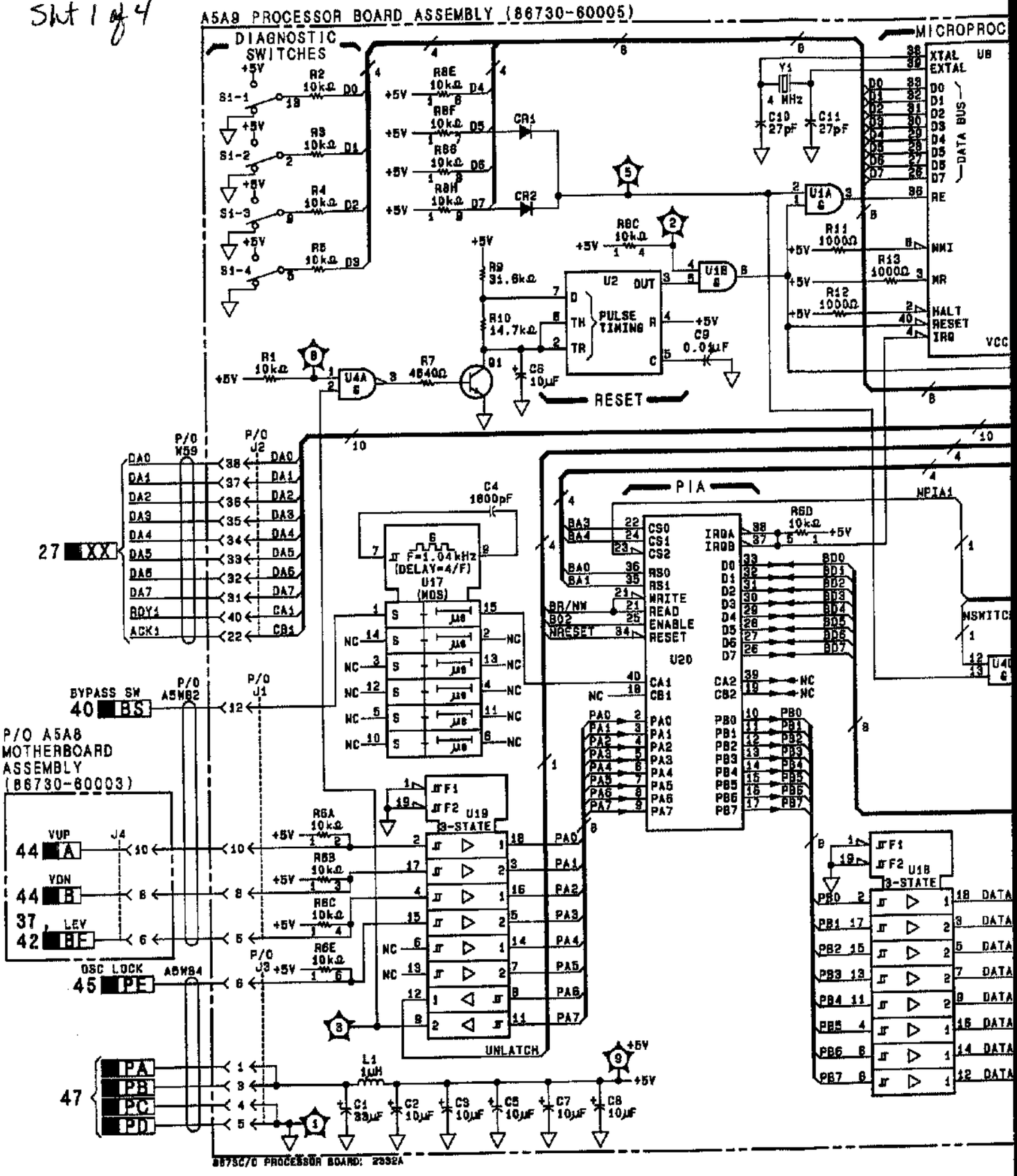


www.valuetronics.com

FIG-8-293
Sht 2 of 4

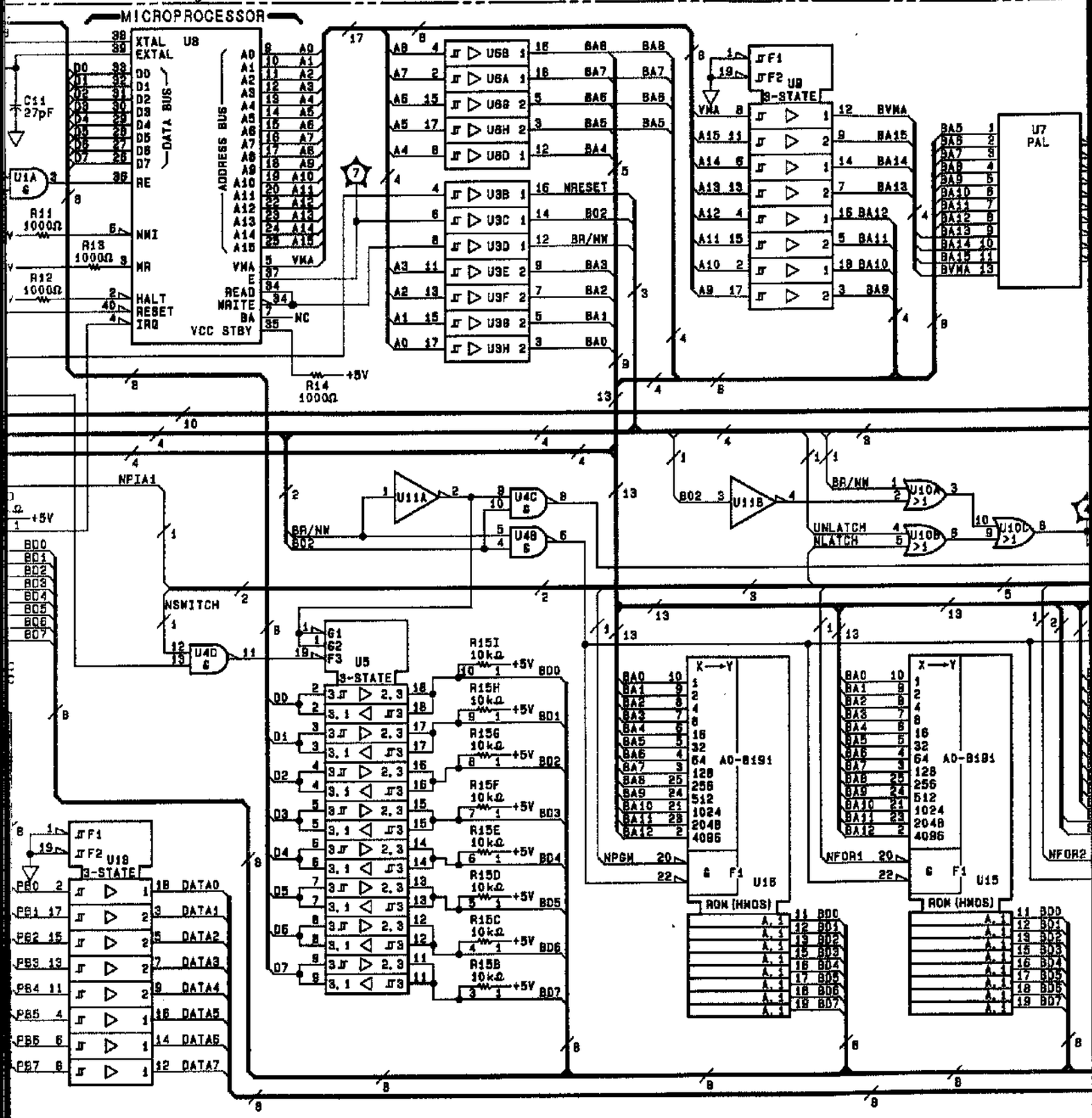


www.valuetronics.com

FIG. 8-293
SHT 3 of 4

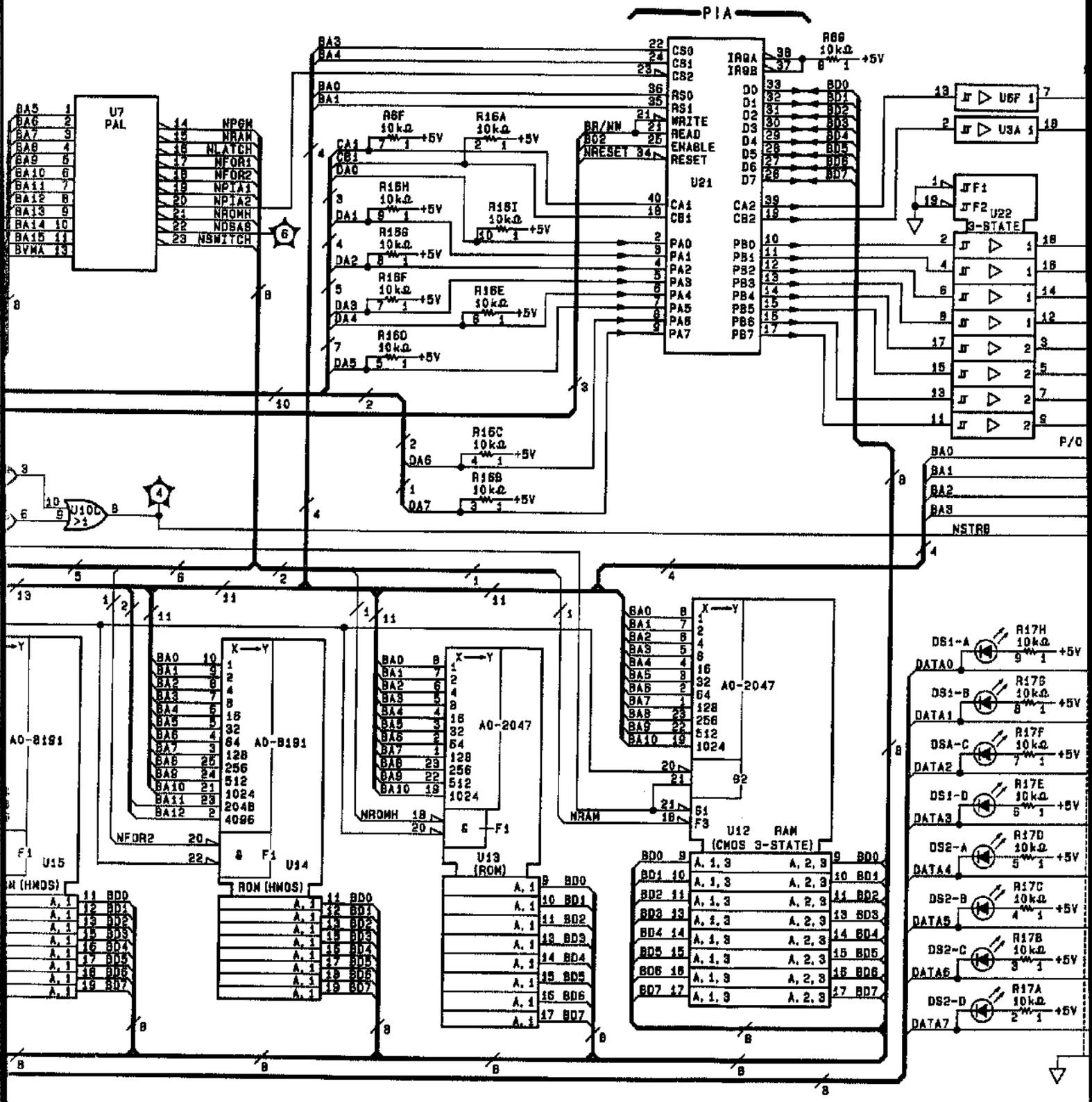


Figure 8-2

www.valuetronics.com

FIG. 8-293
Sht 4 of 4

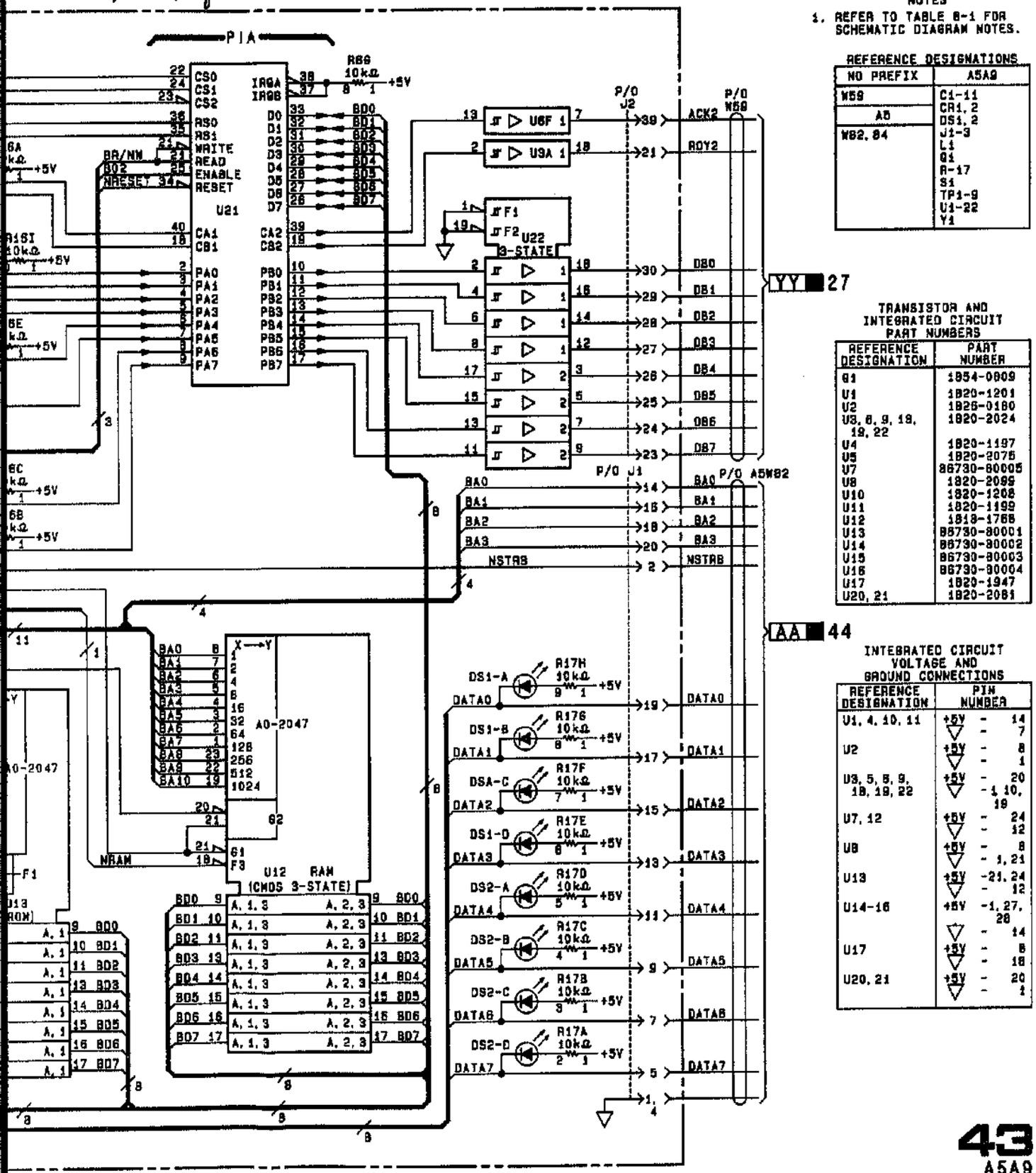


Figure 8-293. A5 Microprocessor Assembly Schematic Diagram



www.valuetronics.com

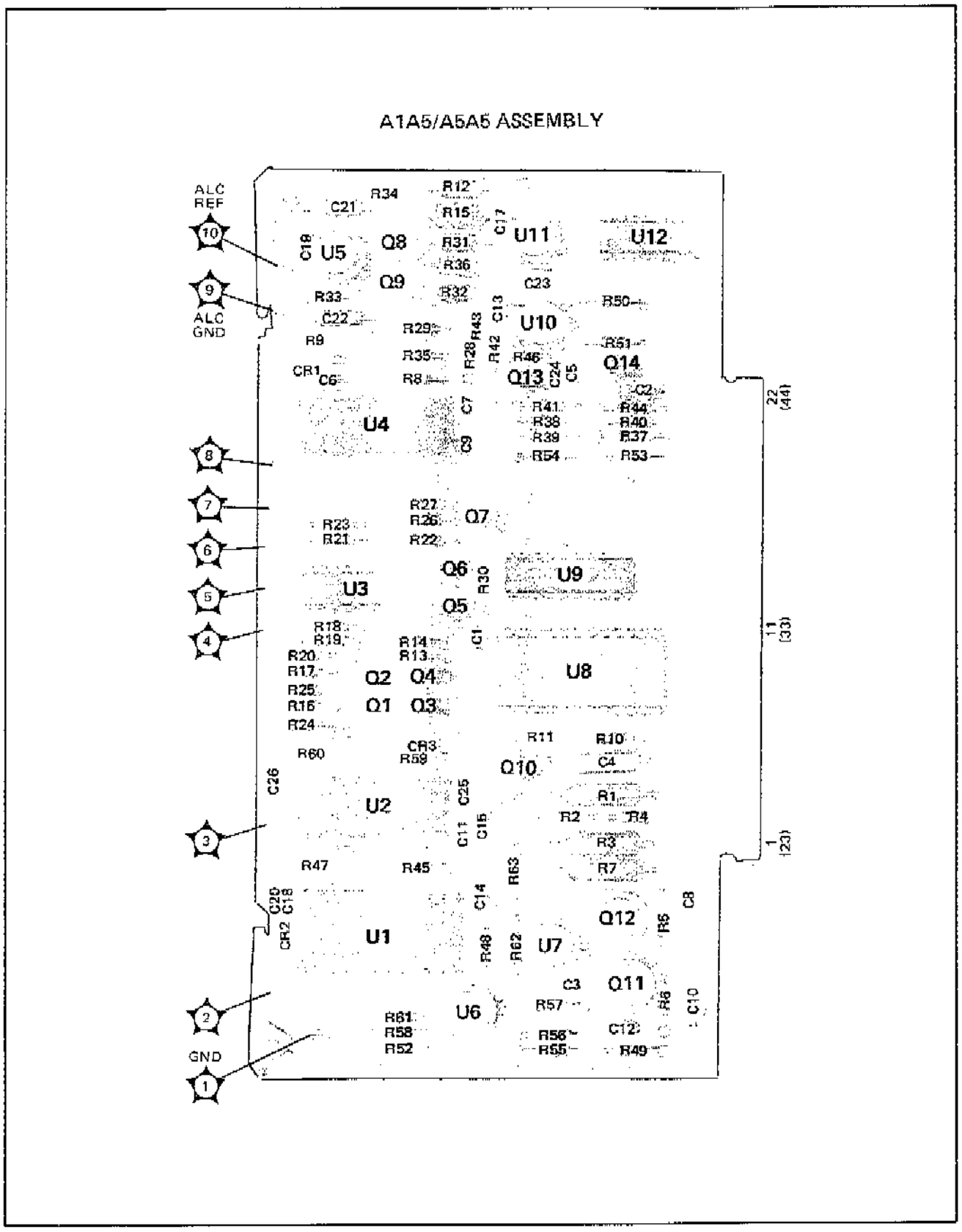


Figure 8-294. A5A5 DAC and Enable Assembly Component and Test Point Location



www.valuetronics.com

FIG. 8-295
Sht 1 of 4

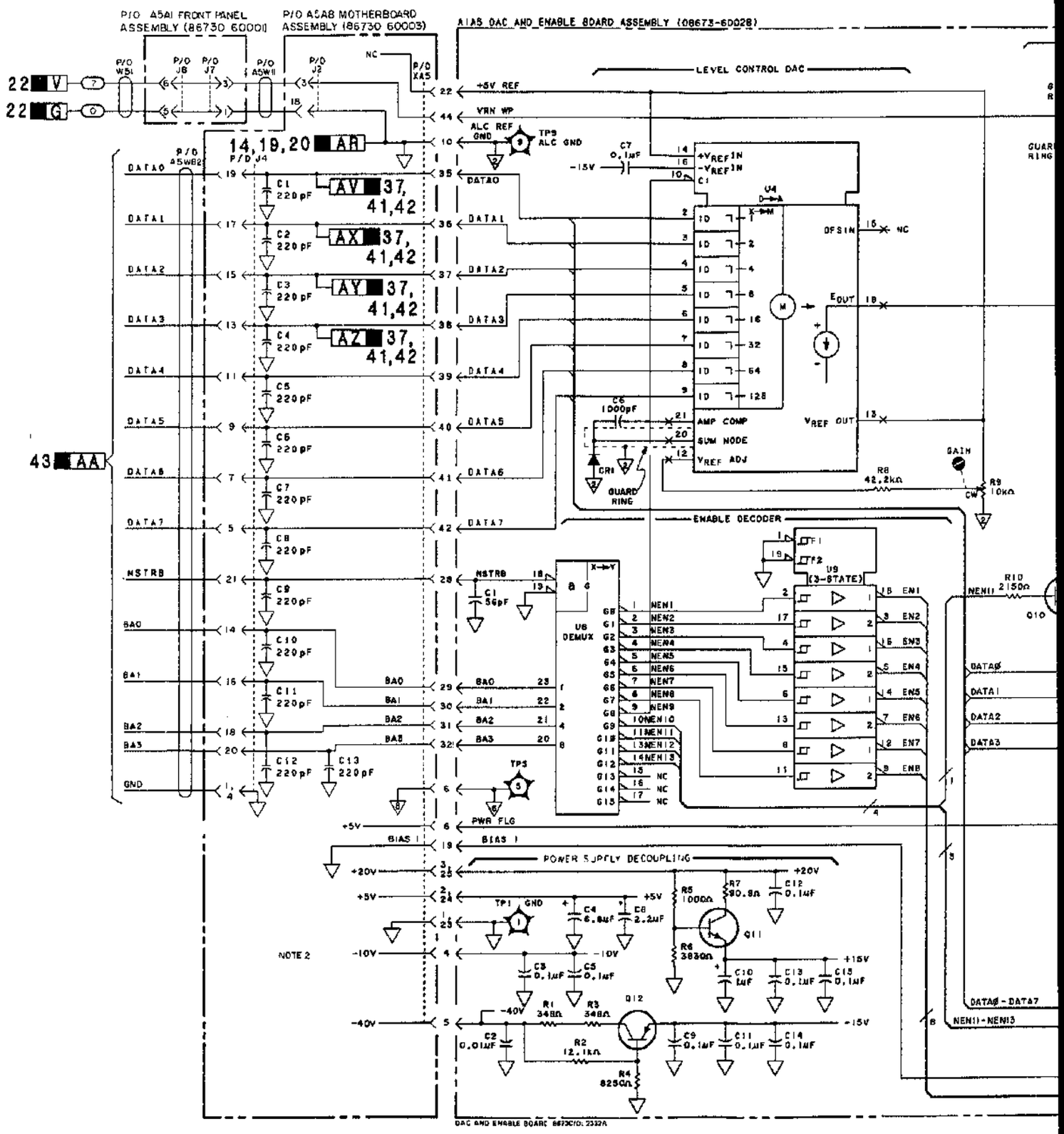


www.valuetronics.com

FIG. 8-295
Sht 2 of 4

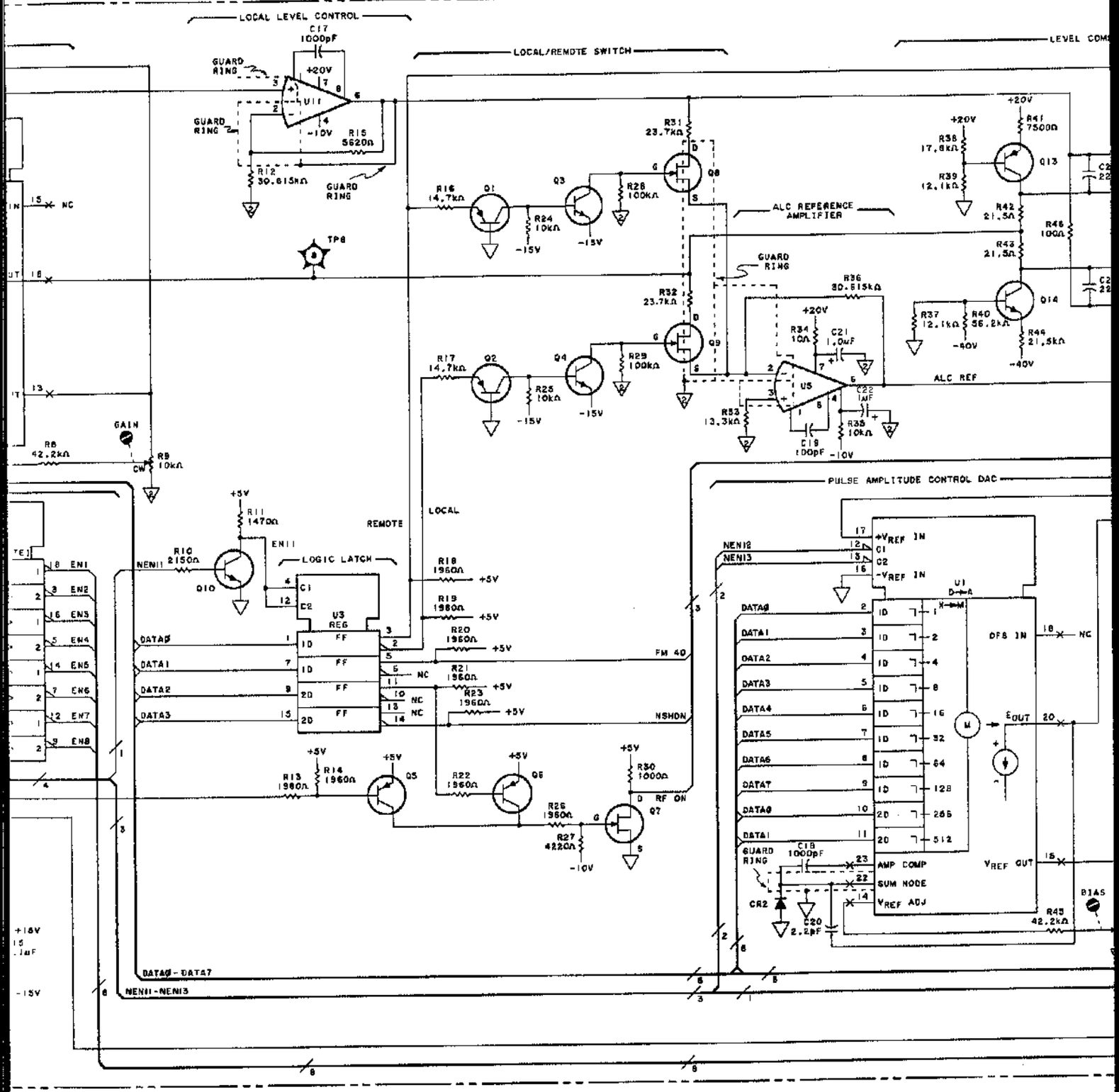


www.valuetronics.com

FIG. 8-295
Sht 3 of 4

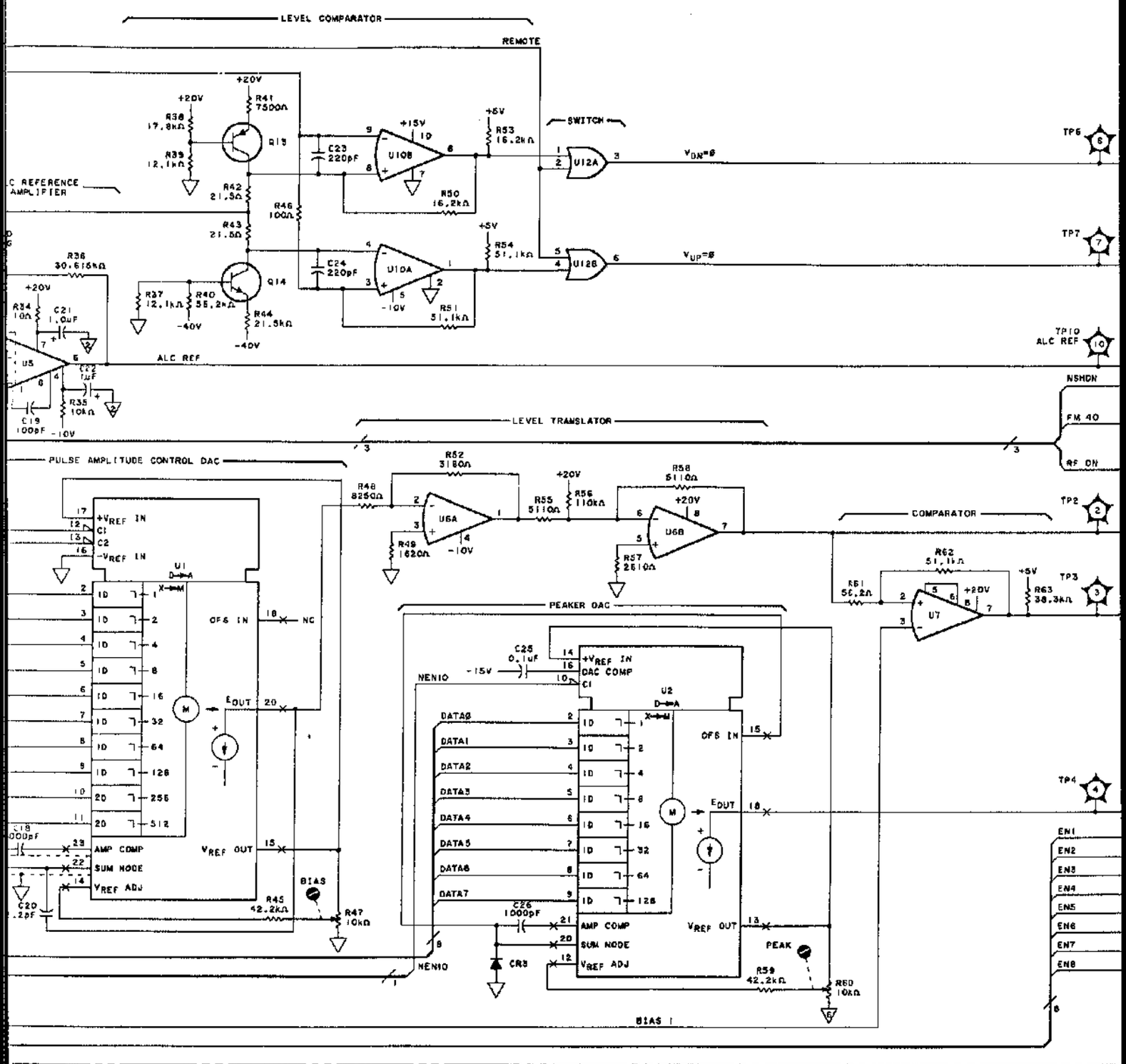


www.valuetronics.com

FIG. 8-295
Sht 4 of 4

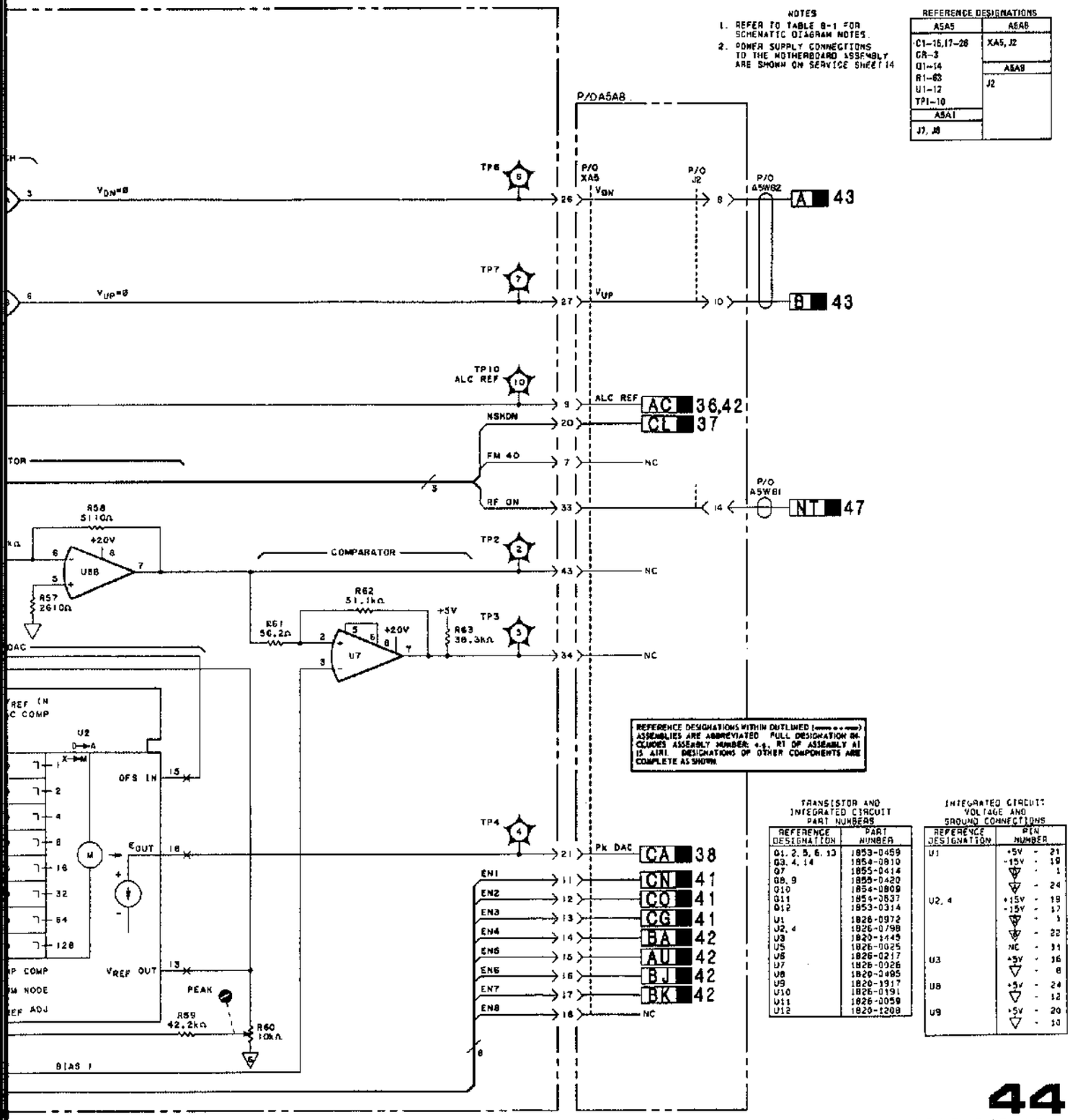


**44**
A5A5, P/O A5A1

**Figure 8-295. A5 DAC and Enable Assembly Schematic Diagram**



www.valuetronics.com

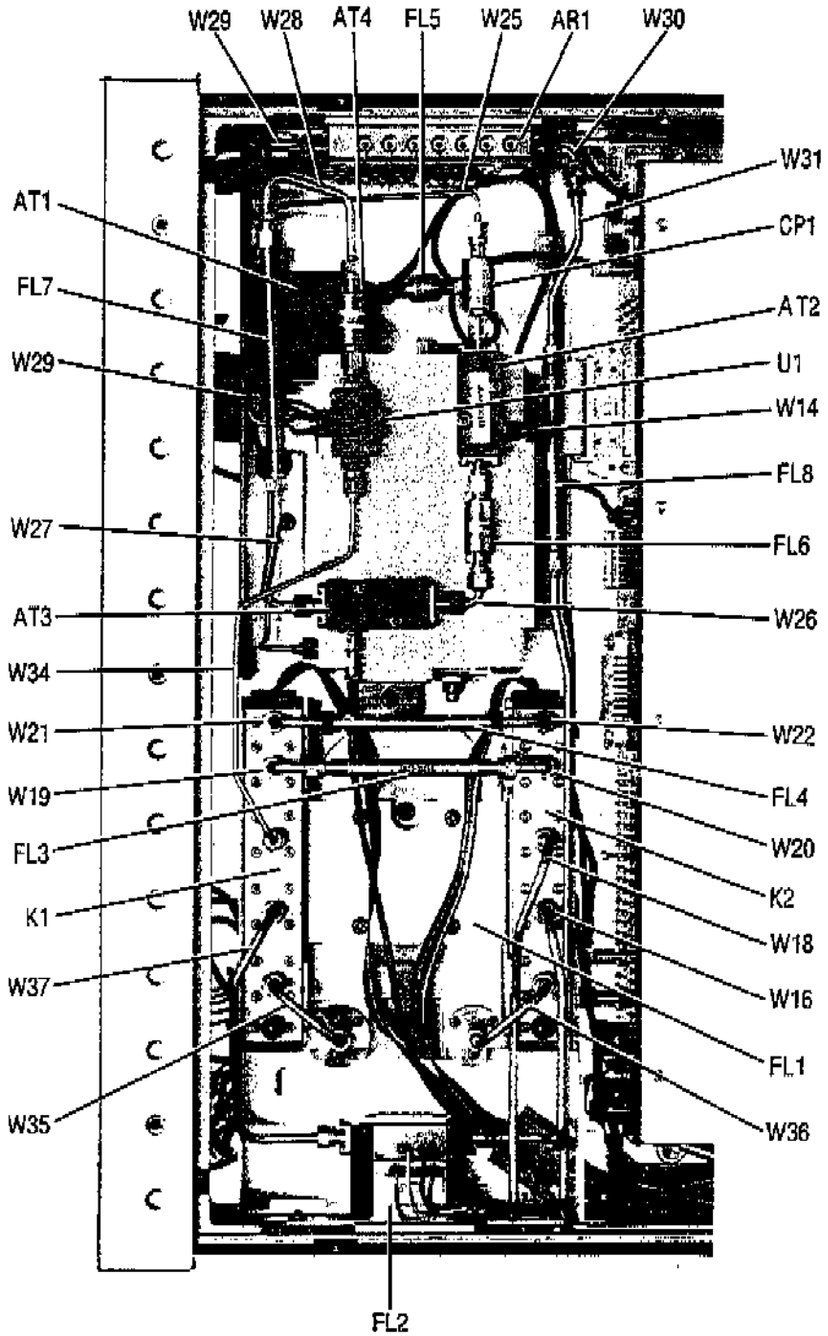


Figure 8-296. Low Band RF Chain Component Location

8-293A

www.valuetronics.com

FIG. 8-297
SHT 1 of 4

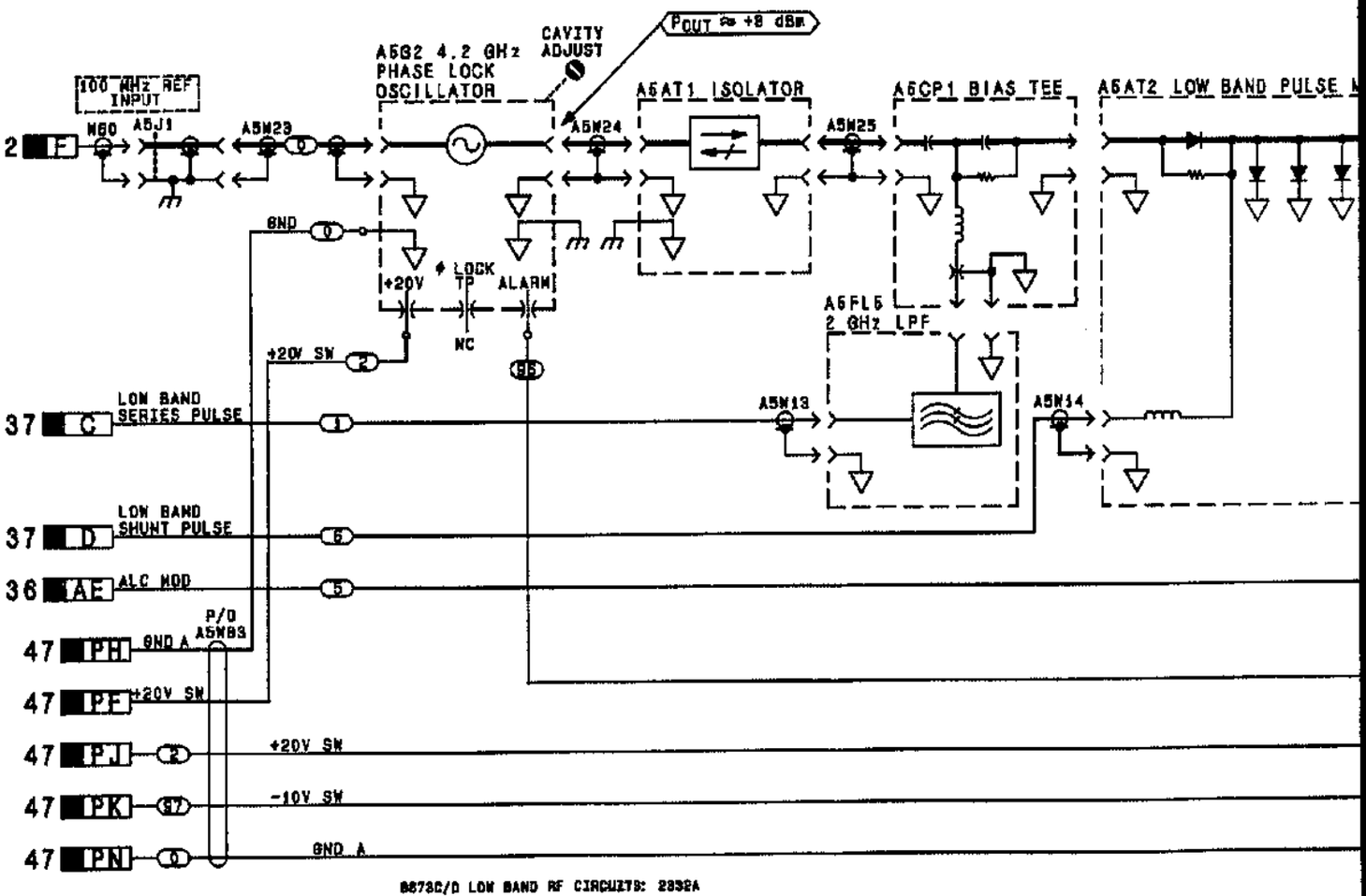


8673C/D LOW BAND RF CIRCUITS: 2332A

www.valuetronics.com

FIG. 8-297
Sht 2 of 4



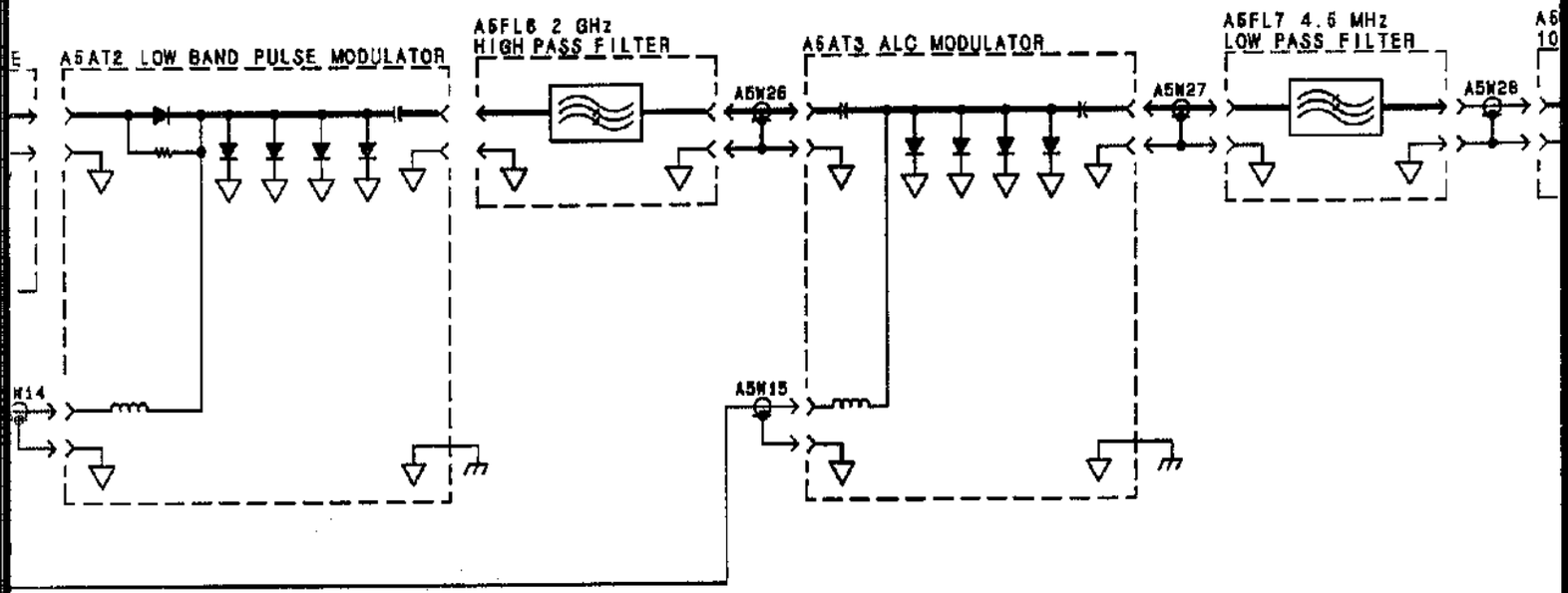


www.valuetronics.com

FIG. 8-297
SHT 3 of 4

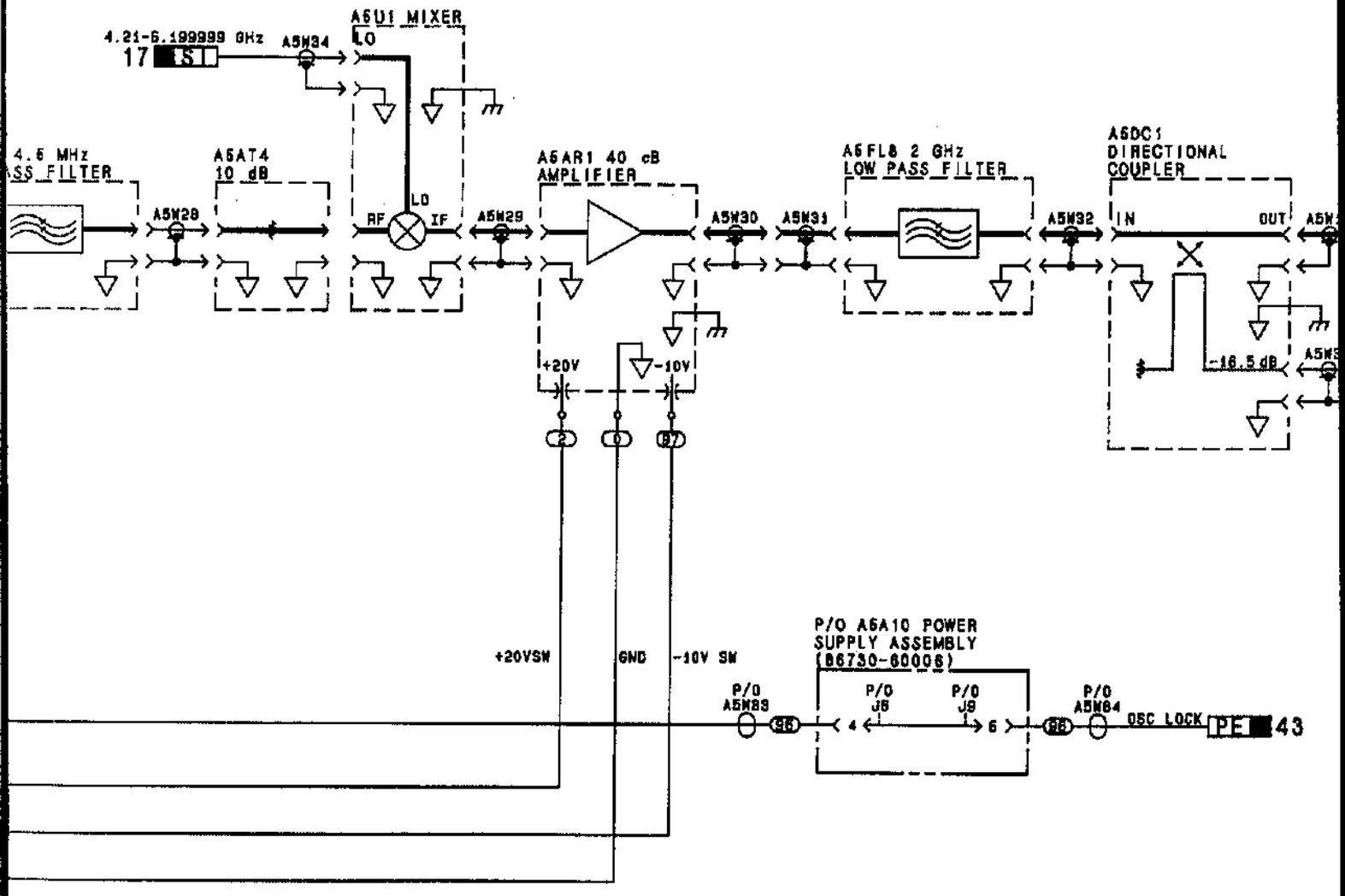


Figure 8-297.

www.valuetronics.com

FIG. 8-297
SH 4 of 4

NOTES
1. REFER TO TABLE 8-1 FOR SCHEMATIC DIAGRAM NOTES.

| REFERENCE DESIGNATIONS | |
|---|---|
| A5 | A5A10 |
| AR1<br>AT1-5<br>CR1<br>CP1<br>DC1<br>FL5-8<br>R2<br>J1<br>U1<br>W13-15, 17, 18, 23-33, 83, 84 | J6, 9 |

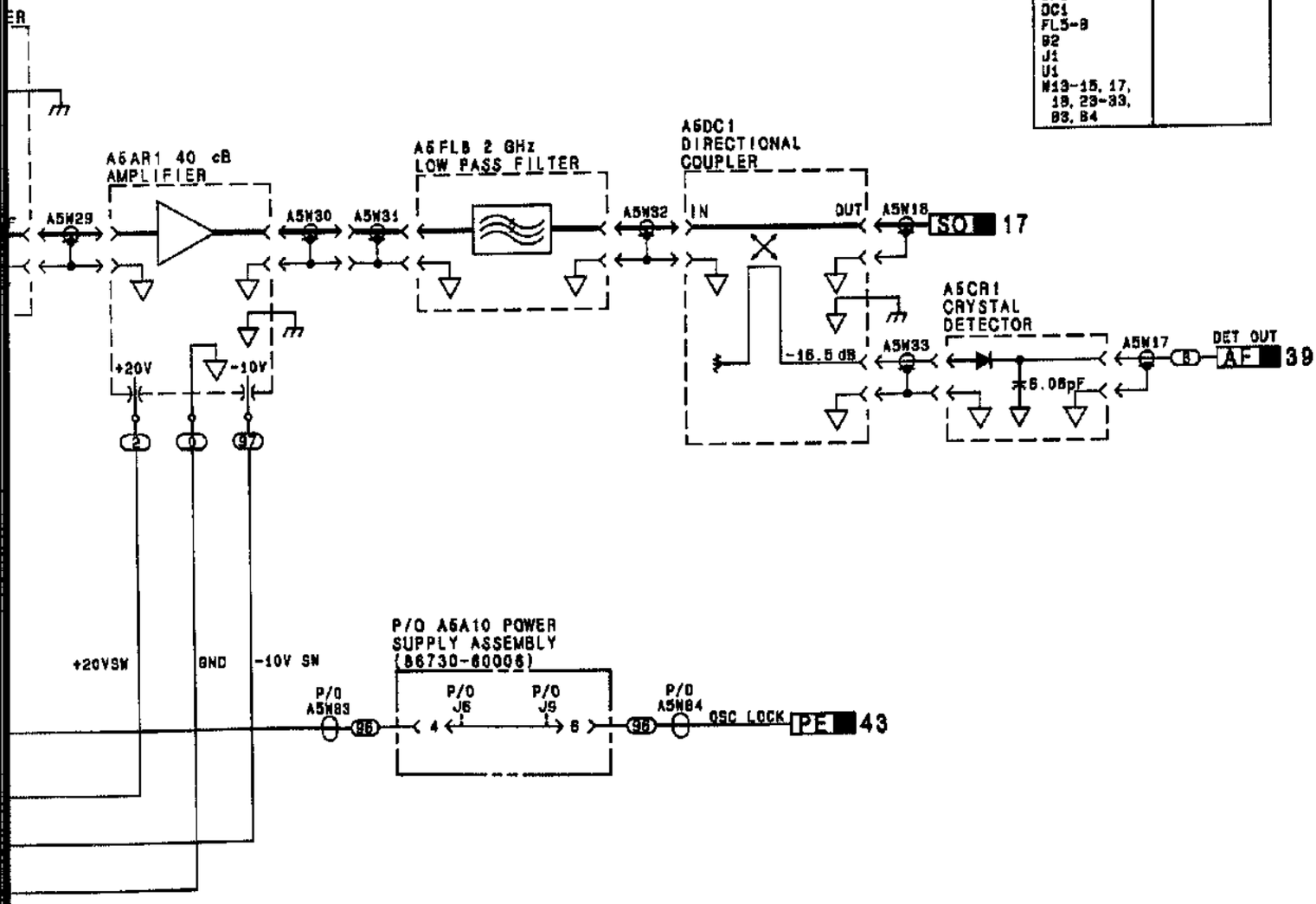


45
A5, P/O A5A10

Figure 8-297. Low Band RF Chain Schematic Diagram



www.valuetronics.com

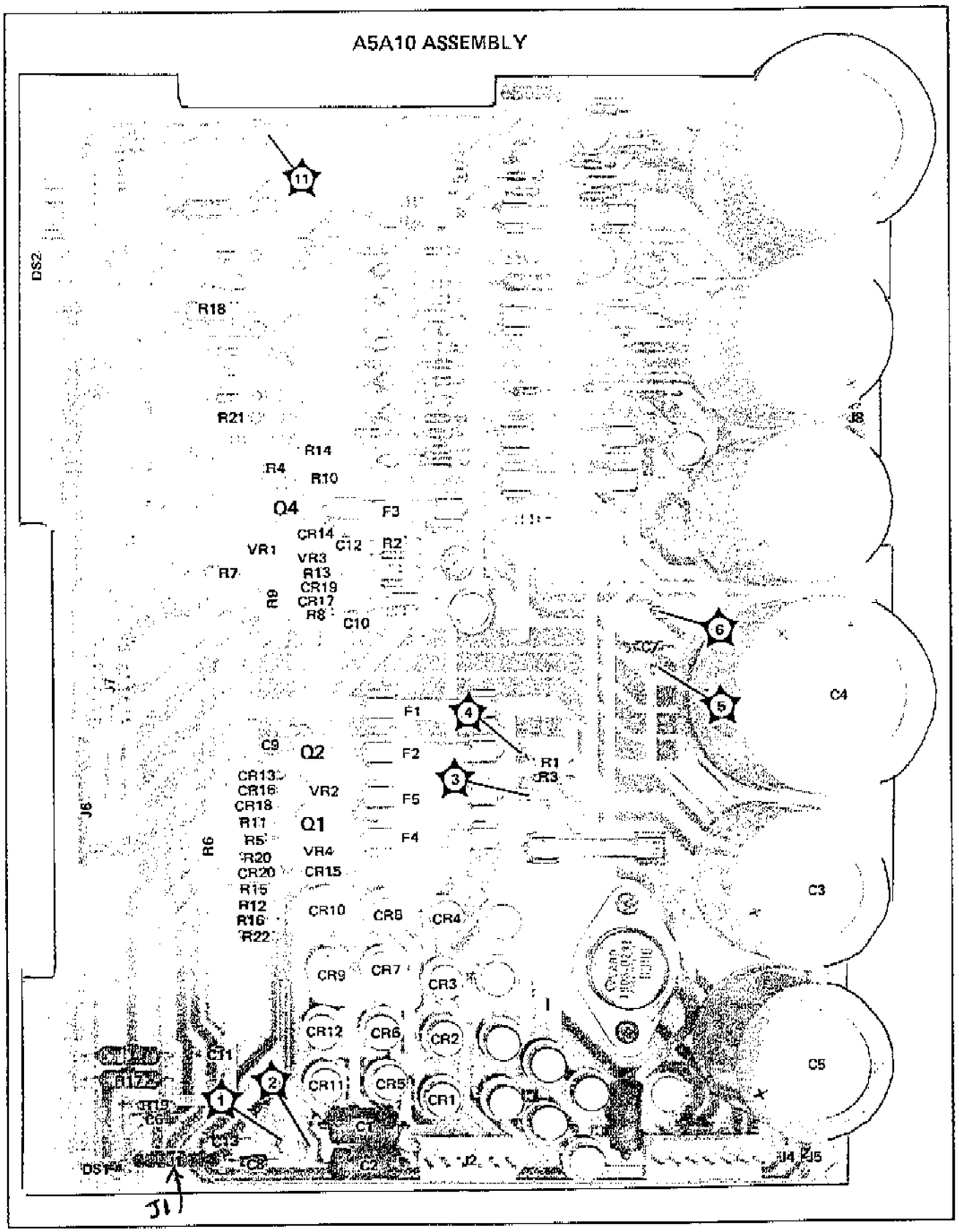


Figure 8-298. A5A10 Power Supply Assembly Component and Test Point Location

8-295a

www.valuetronics.com

FIG. 8-299
Sht 1 of 4

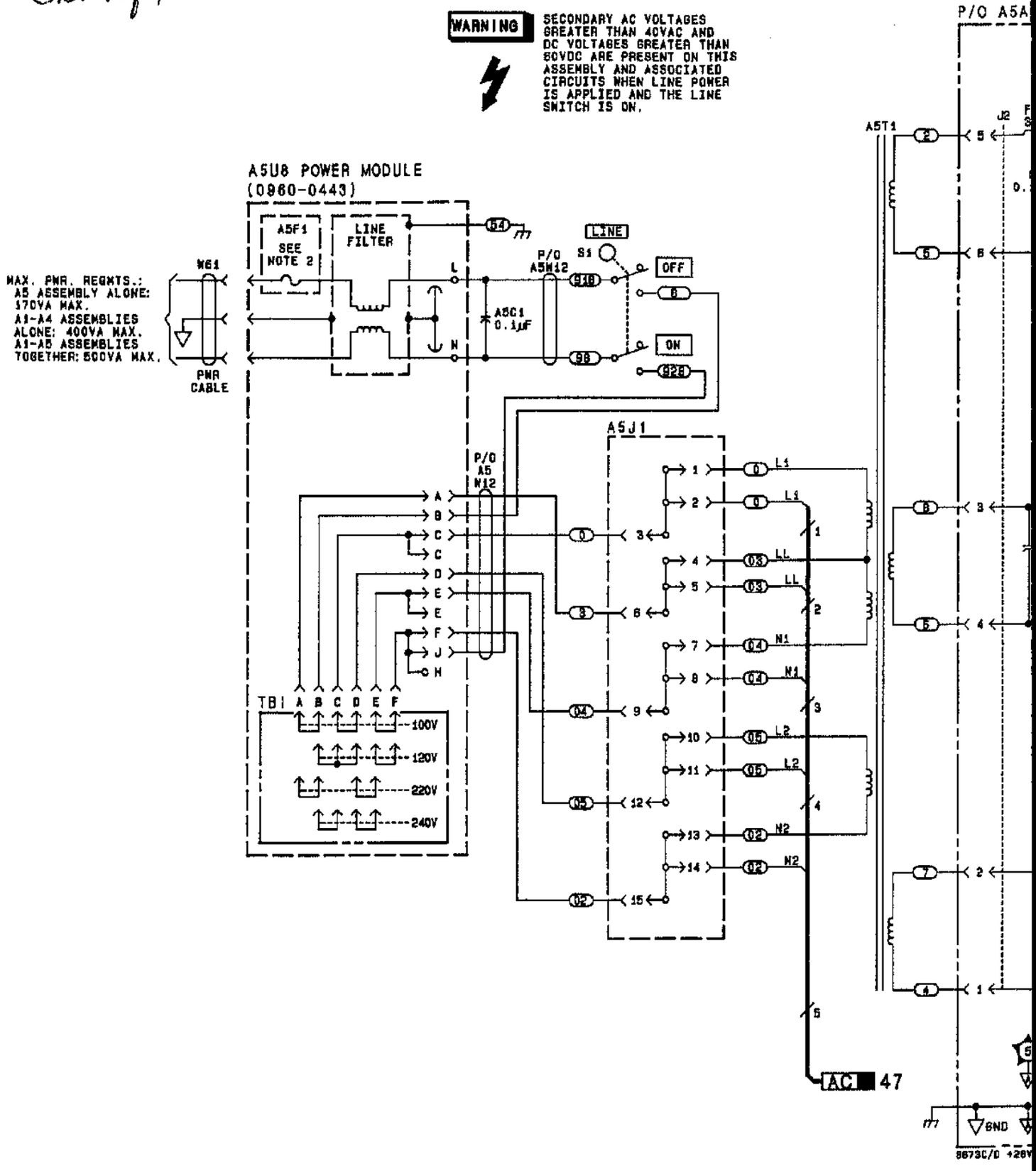


www.valuetronics.com

FIG. 8-299
Sht 2 of 4

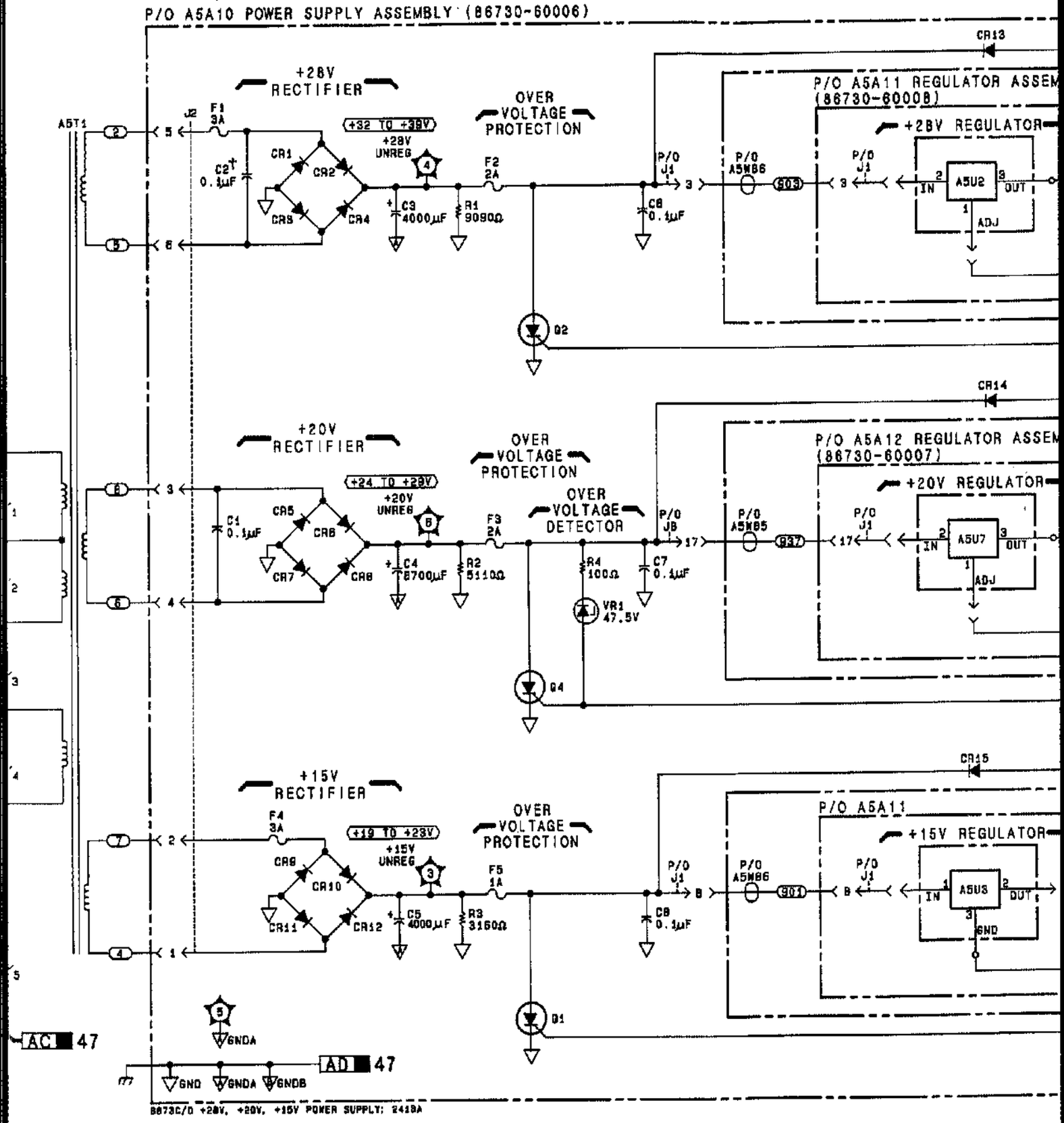


www.valuetronics.com

FIG. 8-299
SH 3 of 4

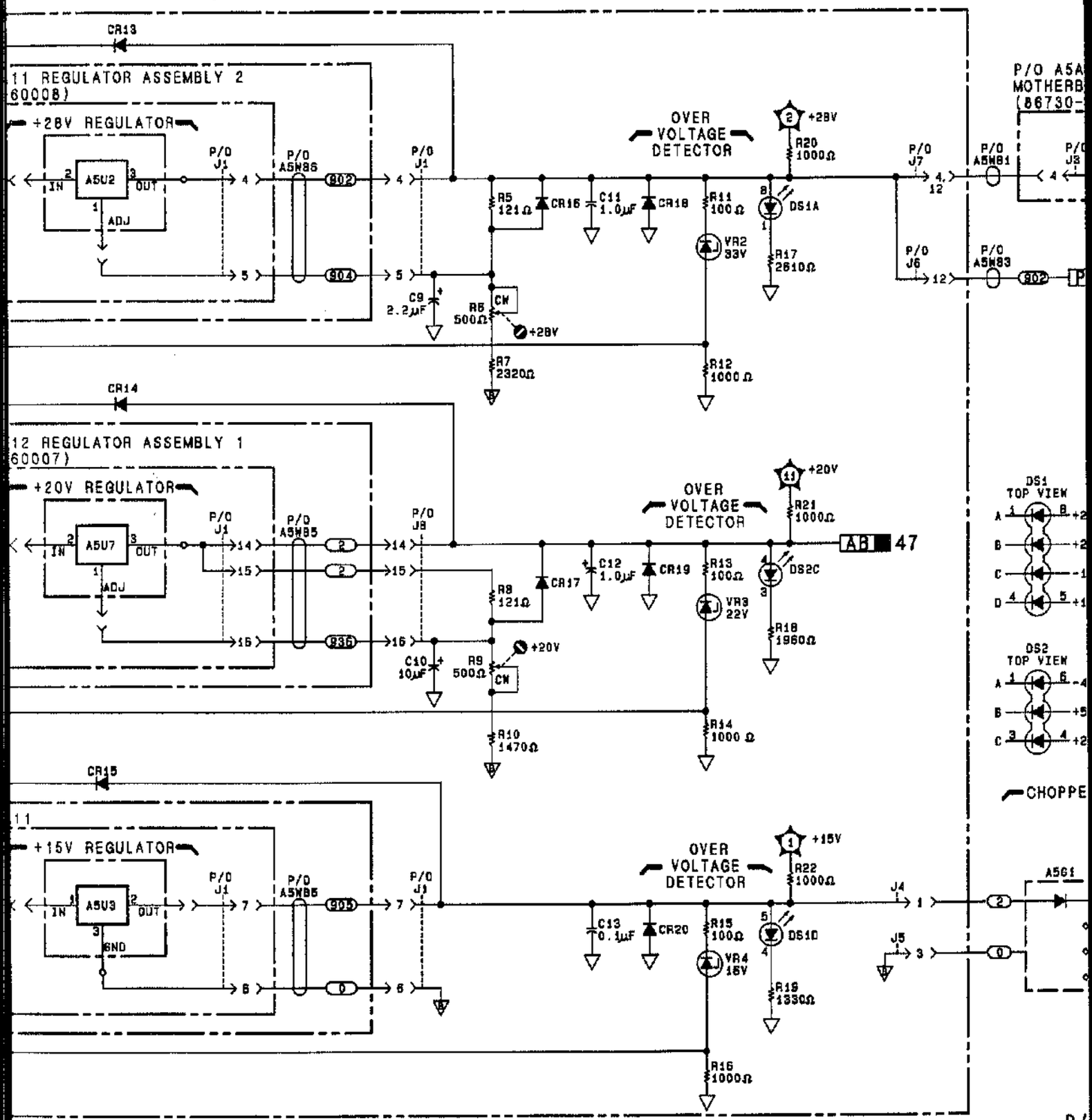


Figure 8-29

www.valuetronics.com

FIG. 8-299
SHT 4 of 4

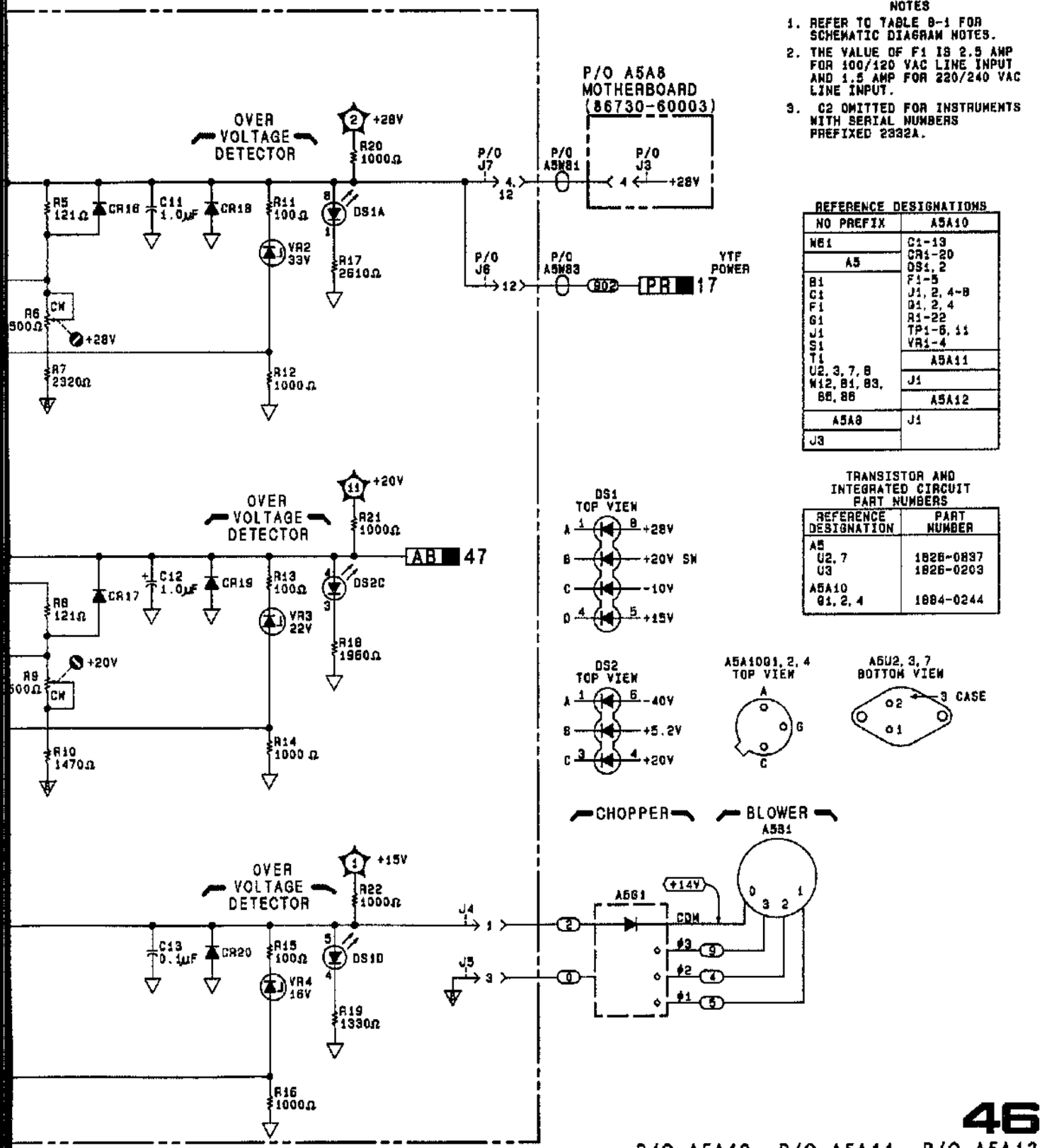


REFERENCE DESIGNATIONS

| NO PREFIX | A5A10 |
|---|---|
| W61 | C1-13 |
| A5 | CR1-20 |
| | DS1, 2 |
| | F1-5 |
| B1 | J1, 2, 4-8 |
| C1 | Q1, 2, 4 |
| F1 | R1-22 |
| G1 | TP1-5, 11 |
| J1 | VR1-4 |
| S1 | A5A11 |
| T1 | J1 |
| U2, 3, 7, 8 | A5A12 |
| W12, B1, B3, B5, B6 | J1 |
| A5A8 | |
| J3 | |

TRANSISTOR AND INTEGRATED CIRCUIT PART NUMBERS

| REFERENCE DESIGNATION | PART NUMBER |
|---|---|
| A5 | |
| U2, 7 | 1826-0837 |
| U3 | 1826-0203 |
| A5A10 | |
| Q1, 2, 4 | 1884-0244 |

**46**

P/O A5A10, P/O A5A11, P/O A5A12

Figure 8-299. +28V, +20V, and +15V Power Supply Schematic



www.valuetronics.com

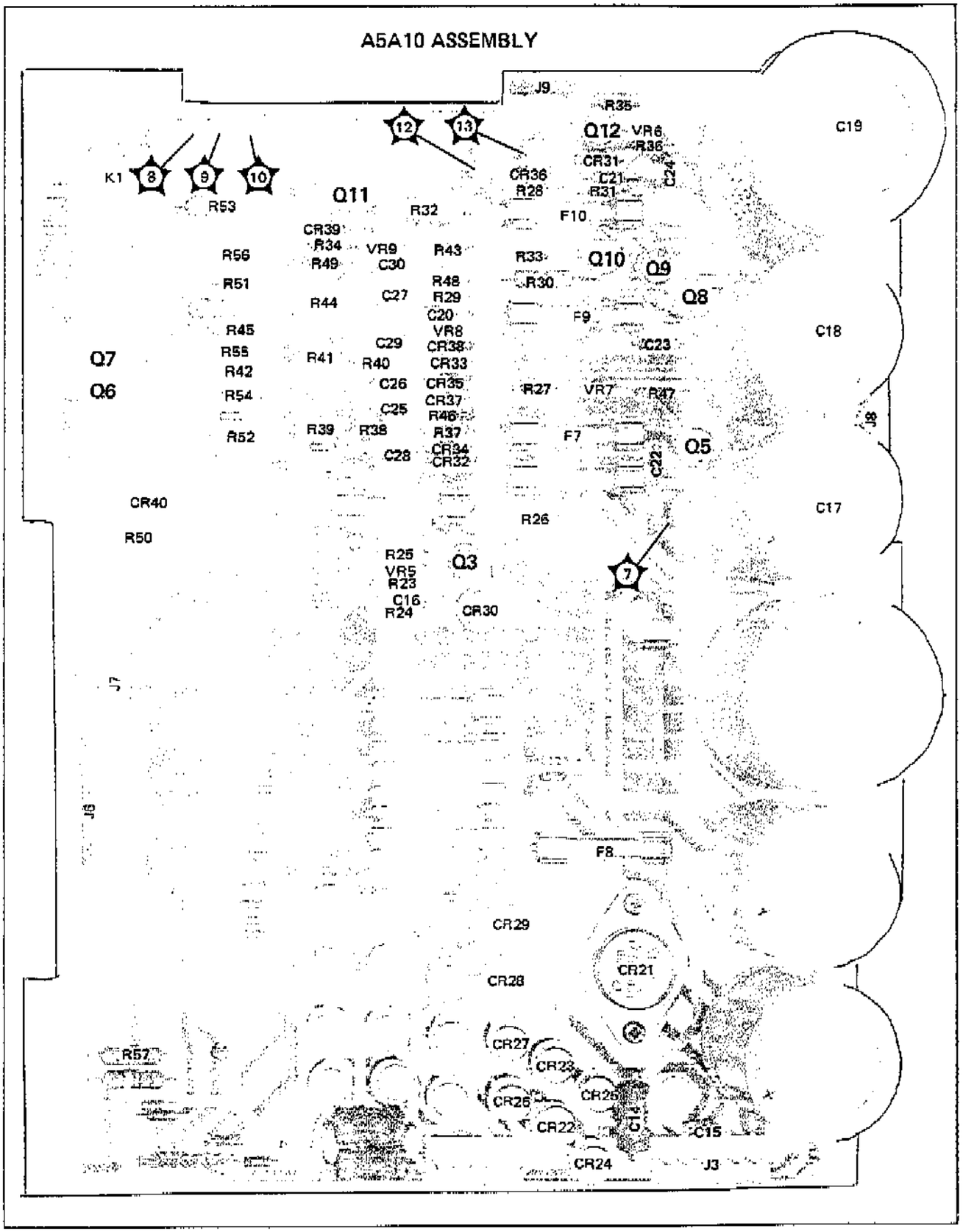


Figure 8-300. A5A10 Power Supply Assembly Component and Test Point Location



www.valuetronics.com

FIG. 8-301
Sht 1 of 4

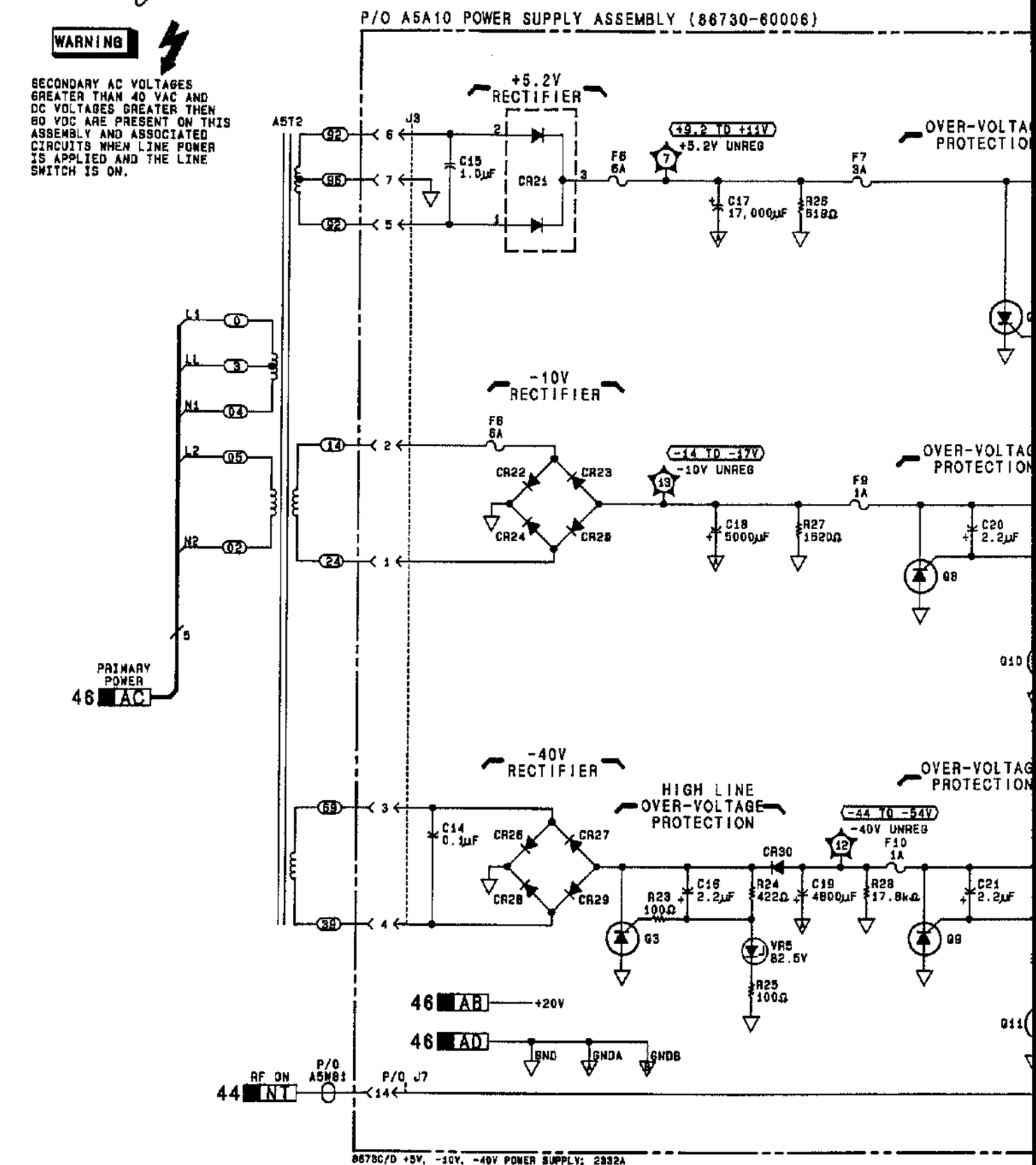


www.valuetronics.com

FIG. 8-301
SHT 2 of 4

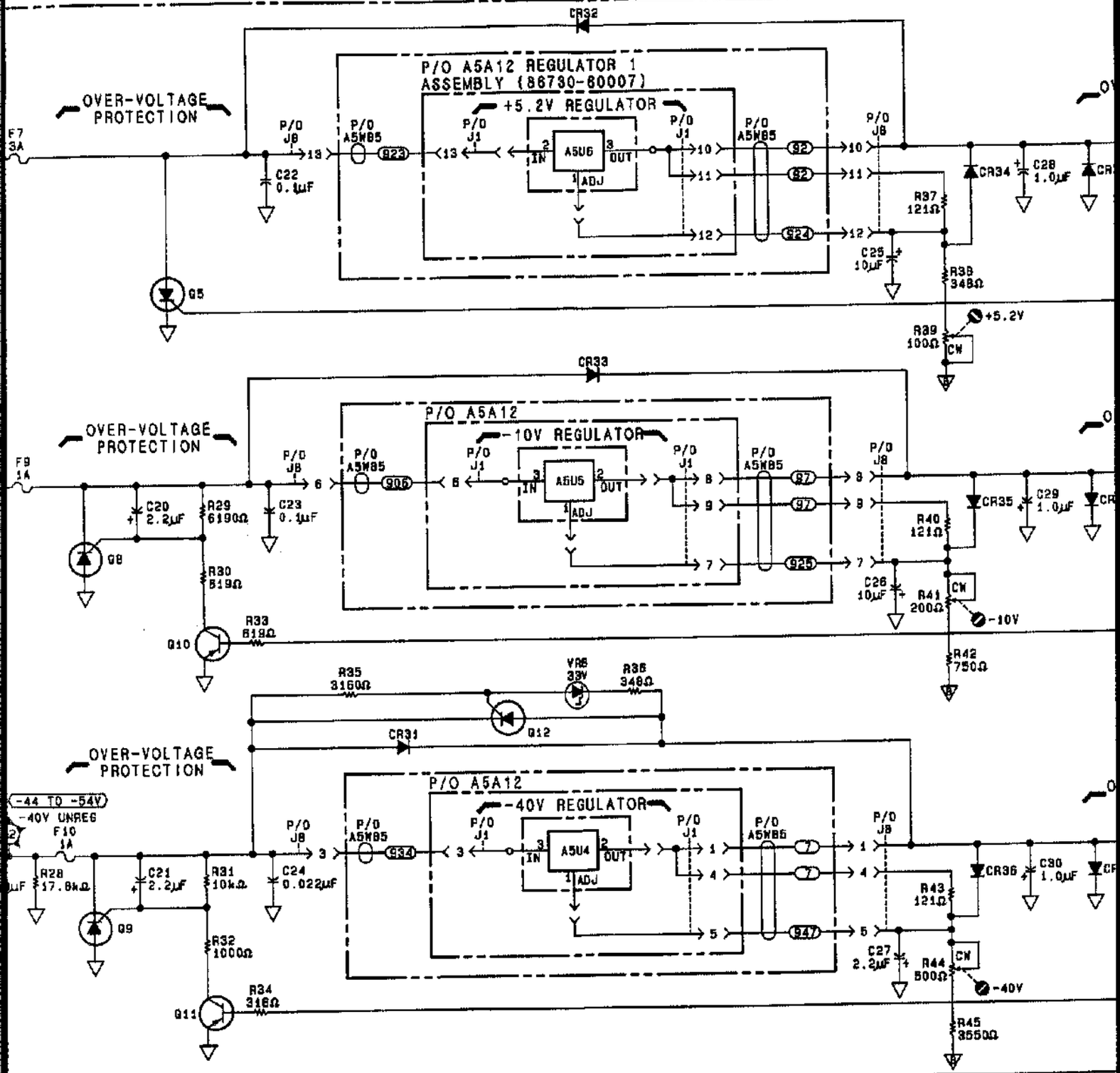


www.valuetronics.com

FIG. 8-301
Sht 3 of 4

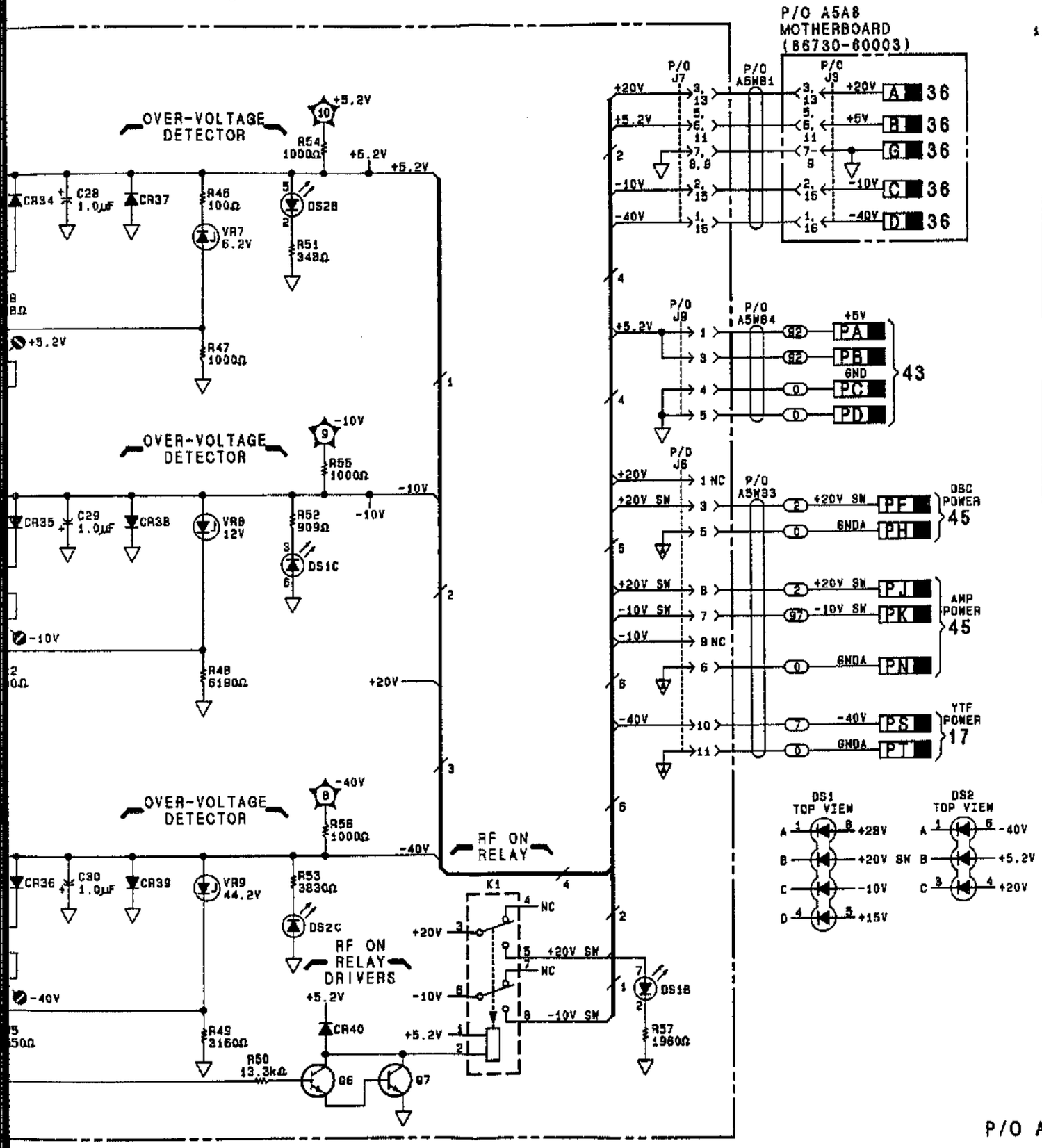


Figure 8-301. +5V, -10V, and -40V Power Supply

www.valuetronics.com

FIG. 8-301
SHT 4 of 4

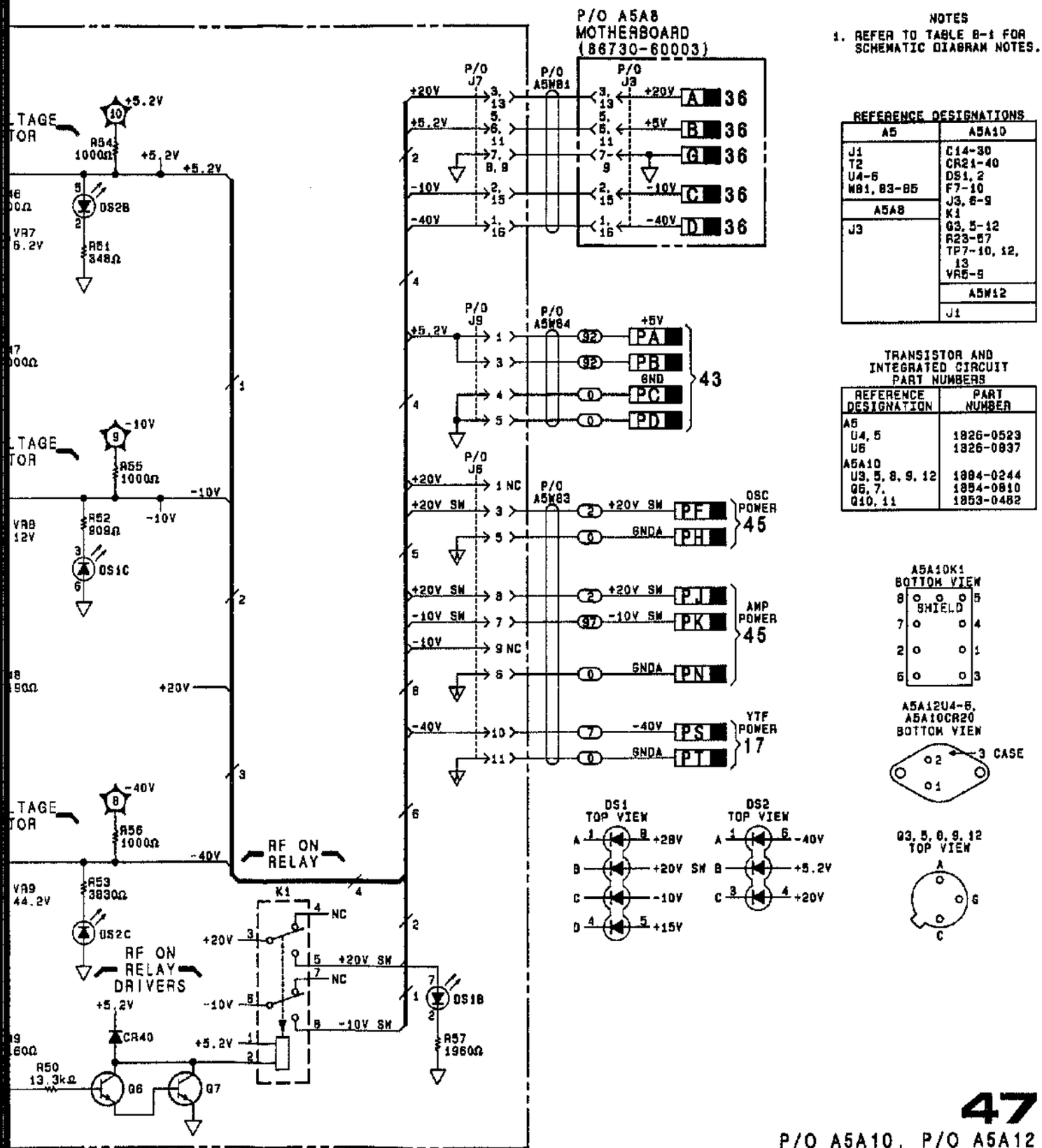


NOTES

1. REFER TO TABLE 8-1 FOR SCHEMATIC DIAGRAM NOTES.

REFERENCE DESIGNATIONS

| A5 | A5A10 |
|---|---|
| J1<br>T2<br>U4-6<br>W81, 83-85 | C14-30<br>CR21-40<br>DS1, 2<br>F7-10<br>J3, 6-9<br>K1<br>Q3, 5-12<br>R23-57<br>TP7-10, 12, 13<br>VR5-9 |
| A5A8 | A5W12 |
| J3 | J1 |

TRANSISTOR AND INTEGRATED CIRCUIT PART NUMBERS

| REFERENCE DESIGNATION | PART NUMBER |
|---|---|
| A5 | |
| U4, 5 | 1826-0523 |
| U6 | 1826-0937 |
| A5A10 | |
| U3, 5, 8, 9, 12 | 1884-0244 |
| Q5, 7, Q10, 11 | 1854-0810<br>1853-0482 |



Figure 8-301. +5V, −10V, and −40V Power Supply Schematic Diagram



www.valuetronics.com

Service Shts. A-D

## Assemblies vs. Service Sheet List

| Assembly | Description | Ser.Sheet |
|---|---|---|
| A1A1 | Attenuator Driver Board Assembly | 18 |
| A1A2 | Detector Module Assembly | 14,17 |
| A1A2A1 | ALC Board Assembly | 14,17 |
| A1A2A2 | Detector Board Assembly | 17 |
| A1A3 | Function Board Assembly | 20 |
| A1A4 | Pulse Driver Board Assembly | 15 |
| A1A5 | DAC and Enable Board Assembly | 22 |
| A1A6 | Meter Board Assembly | 20,40 |
| A1A7 | YTM Driver Board Assembly | 16 |
| A1A8 | SRD Bias Board Assembly | 19 |
| A1A9 | Preamp Assembly | 14,16 |
| A1A10 | YTM Assembly | 16 |
| A1A10A1 | YIG Heater Control Assembly | 16 |
| A1A11 | Power Amplifier Assembly | 16 |
| A1A12 | Motherboard Assembly | 14-16,18-22, 30,31,40 |
| A1A13 | Terminal Strip | 37 |
| A1A14 | Amp Bias Board Assembly | 17 |
| A2A1 | Panel Driver Board Assembly | 25 |
| A2A2 | Key Code Board Assembly | 24 |
| A2A3 | VCO Assembly | 8 |
| A2A4 | Phase Detector Assembly | 7 |
| A2A5 | Divider Assembly 20/30 | 6 |
| A2A6 | Not Assigned | |
| A2A7 | I/O Board Assembly | 30,31 |
| A2A8 | Microprocessor Board Assembly | 26 |
| A2A9 | Frequency/HP-IB Board Assembly | 29 |
| A2A10 | RAM Board Assembly | 28 |
| A2A11 | ROM Board Assembly | 27 |
| A2A13 | Motherboard Assembly | 6-8,10, 20-32 |
| A2A14 | Rear Interconnect Board Assembly | 24,29, 31 |
| A2A15 | HP-IB Connector Board Assembly | 29 |
| A3A1 | Rectifier Assembly | 33 |
| A3A1A1 | Reference Phase Detector Assembly | 1,2 |
| A3A1A2 | 100 MHz VCXO Assembly | 2 |
| A3A1A3 | M/N Phase Detector Assembly | 3 |
| A3A1A4 | M/N VCO Assembly | 4 |
| A3A1A4A1 | VCO Resonator | 4 |
| A3A1A4A2 | VCO Board Assembly | 4 |
| A3A1A5 | M/N Output Assembly | 5 |
| A3A1A6 | M/N Reference Motherboard Assembly | 1-3,5 |
| A3A1A7 | Reference Housing Assembly | |
| A3A2 | Not Assigned | |
| A3A3 | Positive Regulator Assembly | 34 |
| A3A4 | Negative Regulator Assembly | 35 |
| A3A5 | DAC Assembly | 9 |
| A3A6 | YTO Driver Assembly | 10 |
| A3A7 | FM Driver Assembly | 13 |
| A3A8 | 10 MHz Reference Oscillator | 1 |
| A3A9 | YTO Loop Assembly | 11,12 |
| A3A9A1 | Directional Coupler Assembly | 13 |
| A3A9A2 | YTO Interconnect Assembly | 11-13 |
| A3A9A3 | 2.0 - 6.6 GHz YTO Assembly | 13 |
| A3A9A4 | YTO Phase Detector Assembly | 12 |
| A3A9A5 | Sampler Assembly | 11 |
| A3A9A6 | Attenuator Assembly | 13 |
| A3A9A7 | 6.2 GHz Low Pass Filter | 13 |
| A3A10 | Motherboard Assembly | 1,3,6,10, 12-14,21-23 26, 29-31, 33-35 |
| A4A1 | Front Panel Board Assembly | 20,22, 23,32,40 |
| A5A1 | Front Panel Board Assembly | 41,42,44 |
| A5A2 | Detector Module Assembly | 36,39 |
| A5A2A1 | ALC Board Assembly | 36,39 |
| A5A2A2 | Detector Board Assembly | 39 |
| A5A3 | Function Board Assembly | 42 |
| A5A4 | Pulse Driver Board Assembly | 37 |
| A5A5 | DAC and Enable Board Assembly | 44 |
| A5A6 | Switch Driver Board Assembly | 36,41 |
| A5A7 | YTM Driver Board Assembly | 38 |
| A5A8 | Motherboard Assembly | 36-38,40-44, 46,47 |
| A5A9 | Microprocessor Board Assembly | 43 |
| A5A10 | Power Supply Board Assembly | 45-47 |
| A5A11 | Regulator 2 Board Assembly | 46 |
| A5A12 | Regulator 1 Board Assembly | 46,47 |
| A5A13 | Pulse Input Assembly | 37 |
| A5A13A1 | Pulse Input Switch Board Assembly | 37 |

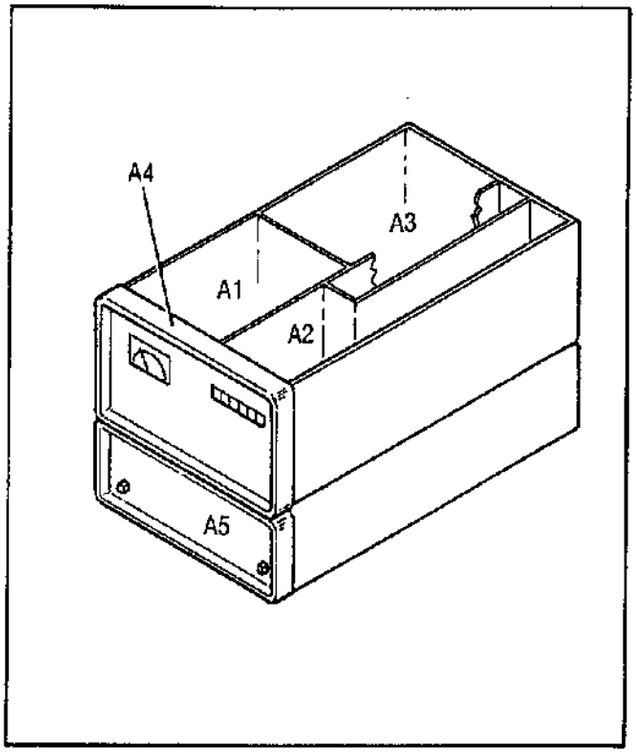


**Major Assemblies**

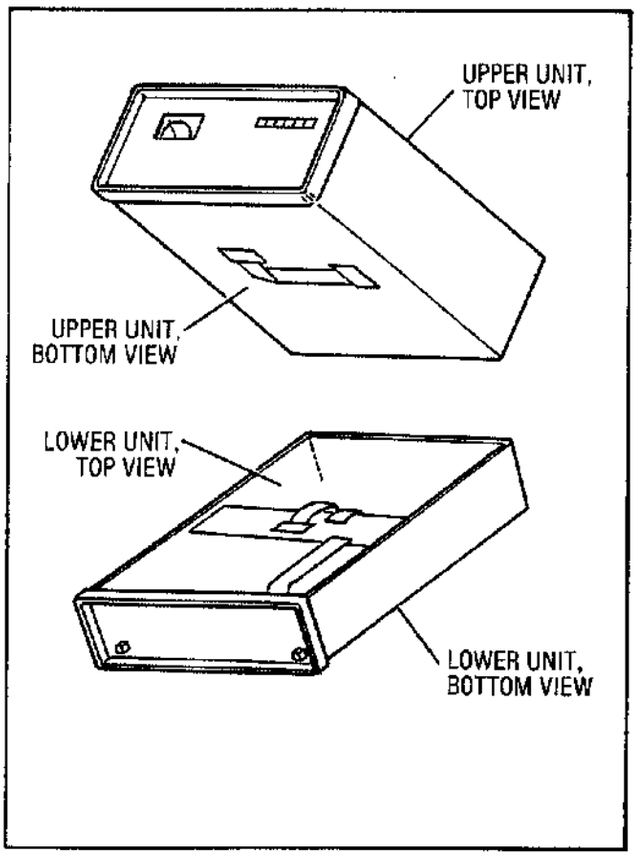


**Internal View Identification**

www.valuetronics.com

## SERVICE SHEET A

## DISASSEMBLY AND REASSEMBLY PROCEDURES

**Top and Bottom Cover Removal and Replacement.** To remove the covers proceed as follows:

a. Place the instrument with the appropriate cover up.

b. Remove the appropriate rear panel standoffs MP33.

c. Loosen the captive screw securing the cover to the frame.

d. Slide the cover to the rear and remove.

e. For replacement, follow the above steps in inverse order.

**Upper and Lower Unit Separation Procedure.** To separate the upper and lower units proceed as follows:

a. Remove power cables.

b. Remove top and bottom covers.

c. Remove trim from front handles and remove screws securing front handles to frame.

d. Remove the handles and side panels.

e. Remove the rear frame cover between upper and lower rear panels.

f. Place instrument on its right side.

g. Refer to Figure 8-302 for the following steps.

h. Remove cable W53 from Coaxial Switch A5K2 in the lower unit and coaxial Switch A1K2 in the upper unit and remove the cable.

i. Remove cable W52 from Coaxial Switch A5K1 in the lower unit and Coaxial Switch A1K2 in the upper unit and remove the cable.

j. Place the instrument upright and remove the six link locks MP60.

k. Remove the DCU Cover MP46 from the top rear right.

l. Remove Circuit Card Assembly A2A11 and disconnect the ribbon cable W59 from A2A11J1.

m. Carefully place the instrument on its right side and separate the two units to expose the interconnecting cables.

n. Disconnect the seven flexible cables from A2A13J1 through J7.

o. Disconnect cable W51 from A1A12J12.

p. Feed ribbon cable W59 through the bottom of the upper chassis. Replace A2A11 in the top unit.

q. To join the two units follow the above steps in inverse order.



www.valuetronics.com

**Transformer A3T1.** To remove A3T1, proceed as follows:

a. Separate the two units.

b. Move the lower unit A5 out of the way.

c. Place the upper unit on its right side and remove its bottom cover MP47.

d. Remove the motherboard insulator by removing the five plastic screws.

e. Free the Line Module A3A11 from the rear of the upper unit. Slide the Line Module out of the chassis sufficiently far to expose the solder terminals.

f. Unsolder the leads from the transformer to the Line Module.

g. Unsolder the transformer leads from the A3 motherboard terminals

h. Refer to Figure 8-303 for the following steps.

i. Remove the two screws securing A3T1 to the A3 motherboard.

j. Remove the screw securing the transformer to the chassis divider A3MP46.

k. Remove the eight screws securing A3T1 to the side rails A3MP44 and A3MP66.

l. Remove the transformer A3T1.

m. For replacement, follow the above steps in inverse order.

**Capacitors A3C1-4.** To remove a capacitor, proceed as follows:

a. Separate the two units.

b. Place the A5 unit out of the way and set the upper unit

on its right side.

c. Remove the bottom cover MP47.

d. Refer to Figure 8-303 for the following steps.

e. For removal of A3C1 only, remove the five plastic screws securing the motherboard insulator to the A3 motherboard.

f. Remove the two screws securing the capacitor to the A3 motherboard, remove the capacitor support A3MP56 (for A3C1-3 only) and remove the capacitor.

g. If A3C4 is to be removed, loosen the clamp A3MP15 and remove the capacitor.

h. For replacement, follow the above steps in inverse order.



www.valuetronics.com

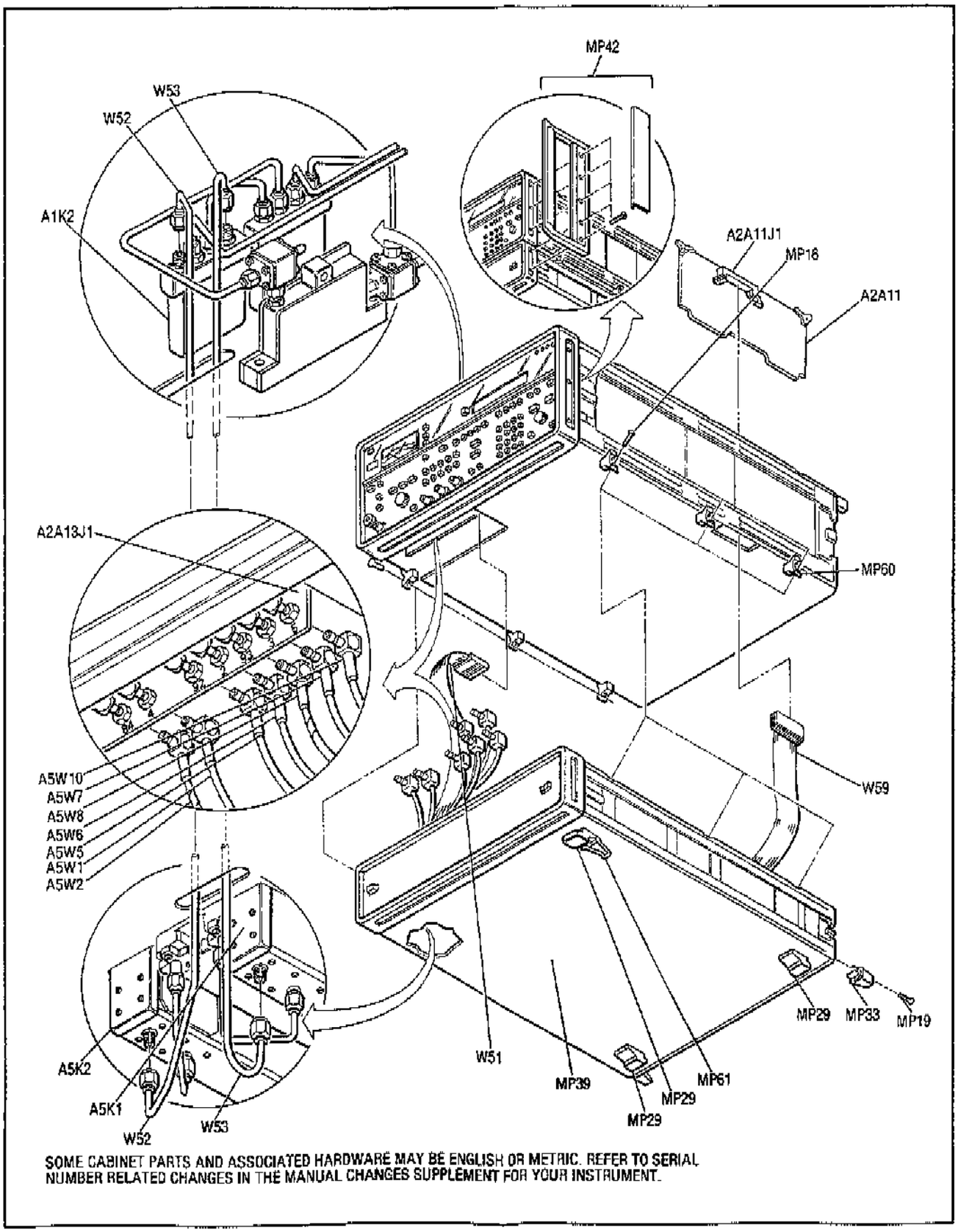


**Figure 8-302. Unit Separation**



www.valuetronics.com

## SERVICE SHEET A (cont'd)

**Front Panel Board Assembly A4A1.** To remove A4A1, proceed as follows:

a. Separate the upper and lower units.

b. Remove the top trim from the frame.

c. Remove screws securing the front panel to the mainframe. (There are five screws on the top and on the bottom. The center screw is not to be removed for this procedure.)

d. Disconnect the RF Coaxial Cable A1W1 from Attenuator A1AT1 and connector A4J1 (A3J6 for Option 004).

e. Remove cables W1, W2 and W3 from A4A1J1, J2, and J3.

f. Remove the following cables from connectors indicated.

| CABLE | CONNECTOR |
|---|---|
| A4W1 | A1A13J2 |
| A4W2 | A1A13J4 |
| A4W3 | A1A12J4 |
| A4W4 | A1A13J6 |

g. Unsolder the leads from the Line Switch A4S1.

h. Unsolder the leads from the Rotary Pulse Generator A4U1.

i. Disconnect the leads from the meter A4M1.

j. Remove the knobs from the Vernier A4A1R2 and Rotary Pulse Generator A4U1.

k. Remove the screws securing A4A1 to A4.

l. Remove the nut securing the Rotary Pulse Generator A4U1 to A4A1.

m. Remove A4A1 from A4.

n. For replacement, follow the above steps in inverse order.



www.valuetronics.com

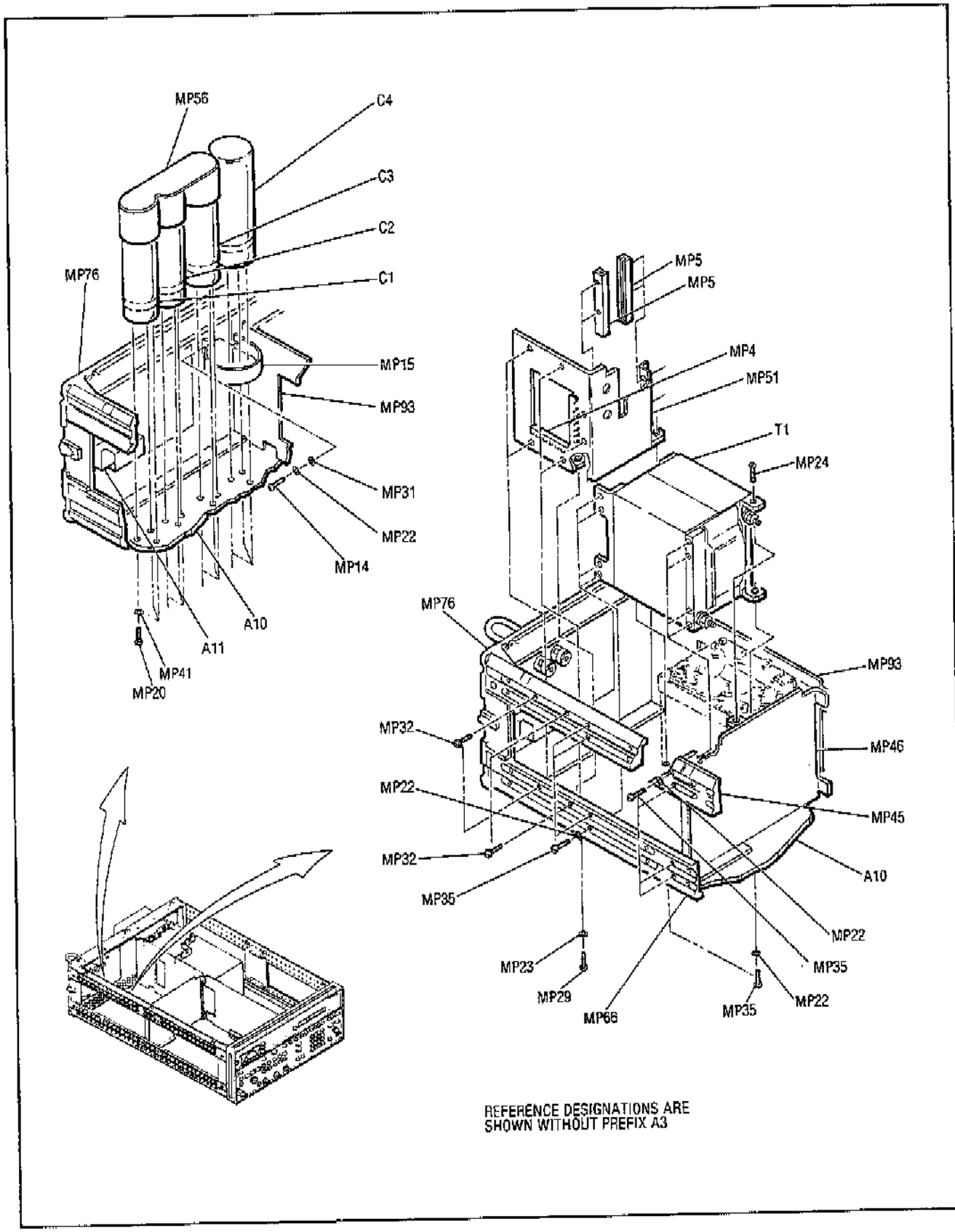


**Figure 8-303. A3 Transformer and Filter Capacitor Remover**



www.valuetronics.com

## SERVICE SHEET A

**Coaxial Switch A1K1.** To remove A1K1, proceed as follows:

a. Separate the two units.

b. Remove bottom cover of upper unit MP47.

c. Remove screws securing RF Cover MP49 and remove cover.

d. Refer to Figure 8-304 for the following steps.

e. Disconnect A1W17 from A1DC1 and A1K1 and remove A1W17.

f. Disconnect A1CR1 from Circuit Card Assembly A1A2 and remove A1CR1.

g. Disconnect A1W2 from A1DC1.

h. Remove screws securing A1MP37 to RF Gusset (Left) A1MP30 and remove two spacers A1MP49.

k. Remove screw securing A1AR1 to RF Gusset (Left) A1MP30.

l. Remove cable A1W15 from Isolator A1AT6 and A1K1 and remove.

m. Remove cable A1W18 from A1K1 and A1K2 and remove.

n. Remove cable A1W15 from Isolator A1AT5 and A1K1 and remove.

o. Unsolder wires from A1K1 to A1 motherboard at the A1 motherboard terminals.

p. Remove A1K1.

q. For replacement, follow the above steps in inverse order.

**Coaxial Switch A1K2.** To remove A1K2 proceed as follows:

a. Separate the two units.

b. Remove bottom cover of top unit MP47.

c. Remove screws securing RF Cover MP49 and remove cover.

d. Refer to Figure 8-304 for the following steps.

e. Remove screw securing Spacer A1MP49, and A1K2 to RF Gusset (Left) A1MP30 and remove spacer.

f. Remove screw securing spacer A1MP51 to RF Gusset (Left) A1MP30 and remove spacer.



www.valuetronics.com

g. Remove screw securing spacer A1MP51 to RF Gusset (Left) A1MP30 and remove spacer.

h. Remove cable A1W3 from Coaxial Switch A1K1 and YTM Assembly A1A10.

i. Remove cable A1W18 from Coaxial Switches A1K1 and A1K2.

j. Unsolder leads from A1K2 to A1 motherboard at the A1 motherboard.

k. Remove A1K2

m. For replacement, follow the above steps in inverse order

**Attenuator A1AT1.** To remove A1AT1, proceed as follows:

a. Separate the two units.

b. Remove the screws securing RF Cover and remove cover.

c. Refer to Figure 8-304 for the following steps.

d. Remove cable A1W17 from A1DC1.

e. Remove cable A1W2 from A1DC1.

f. Remove Crystal Detector A1CR1 from A1DC1.

g. Remove the two screws which secure the Coupler Support A1MP37 to RF Gusset (Left) A1MP30 and remove the support and A1DC1.

h. Remove cable A1W2 from A1AT1.

i. Remove four screws from RF Gusset (Left) which secure relays A1K1, A1K2 and A1AR1 and remove screws and spacers A1MP58 and A1MP49.



www.valuetronics.com

j. Remove screw securing spacer A1MP51 to RF Gusset (Left) A1MP30 and screw securing spacer A1MP51 to Coaxial Switch A1K2 and remove spacer A1MP51.

k. Remove A1W1 from A1AT1 and from A4J1 (A3J6 for Options 004 and 005).

l. Remove Circuit Card Assembly A1A2.

m. Remove cable A1AT1W1 from A1J5.

n. Remove two screws securing A1AT1 to RF Gusset (Left) A1MP30.

o. Remove A1AT1, A1MP43 and A1MP44.

p. For replacement, follow the above steps in inverse order.

**YTM Assembly A1A10.** To remove the YTM, proceed as follows:

a. Separate the two units.

b. Remove bottom cover MP47 of upper unit.

c. Remove the RF Cover MP49.

d. Refer to Figure 8-304 for the following steps.

e. Disconnect cable A1W2 from Directional Coupler A1DC1.

f. Remove Crystal Detector A1CR1 from A1DC1 and Circuit Card Assembly A1A2.

g. Remove cable A1W3 from Coaxial Switch A1K2 and YTM Assembly A1A10.

h. Remove cable A1W5 from YTM Assembly A1A10.

i. Remove cable A1W6 from Circuit Card Assembly A1A10A1J1.

j. Remove cable A1W17 from A1DC1 and A1K1.

k. Remove cable A1W8 from A1A10J1.

l. Remove the two screws securing Directional Coupler bracket A1MP37 to RF Gusset (Left) A1MP30 and remove the bracket and coupler.

m. Remove two screws which secure the YTM A1A10 to the A1 motherboard and remove 1A1A10.

n. Remove MP64 from A1A10.

o. For replacement, follow the above steps in inverse order.



www.valuetronics.com

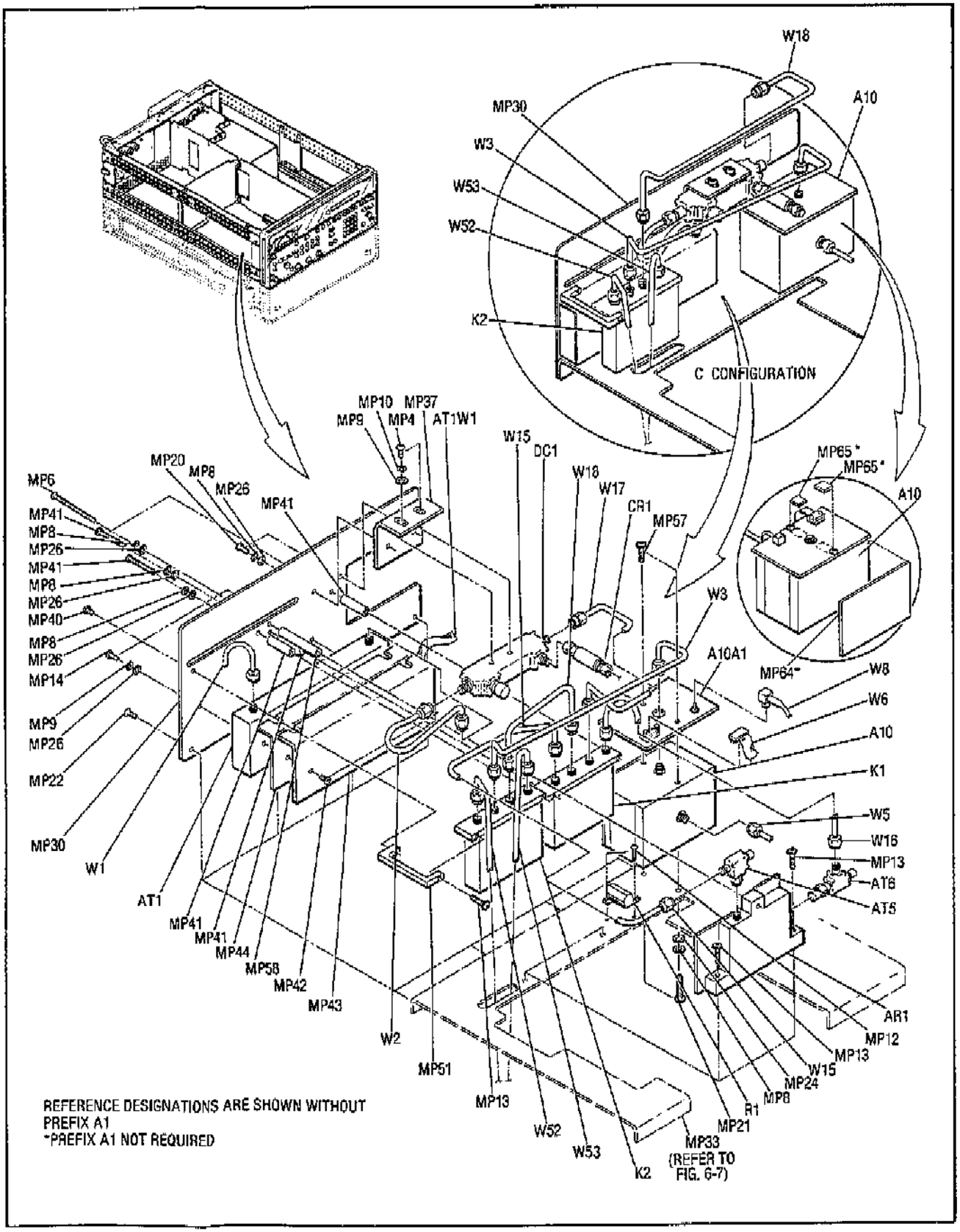


Figure 8-304. A1 RF Output Assembly — YTM Relays and Attenuator



www.valuetronics.com

## SERVICE SHEET B

**Amplifiers A1A9 and A1All.** To remove either amplifier, proceed as follows:

a. Remove the top cover.

b. Remove RF Cover.

c. Refer to Figure 8-305 for the following steps.

d. Remove cable A1W4 from Filter A1FL1 and Amplifier A1A11J1.

e. Remove cable W7 from Preamplifier A1A9J2 and Directional Coupler A3A9A1J1.

f. Remove Cable A1W11 from Preamplifier A1A9J4 and Bias Tee Assembly A1CP1.

g. Remove cable A1W3 from Preamplifier A1A9J1.

h. Remove two screws A3MP32 which secure A1MP28 to chassis divider A3MP46.

i. Remove two screws A1MP18 which secure A1MP28 to chassis A1MP33.

j. Remove A1MP28 from the unit.

k. To remove either amplifier, remove the eight screws around each amplifier, the screw A1MP15 with its flat washer, lockwasher and nut and screw A1MP13. Retain insulator A1MP1.

l. Remove the appropriate amplifier.

m. For replacement, follow the above steps in inverse order.

**Placement of the YTO Loop in the Service Position.** To place the YTO Loop in the service postion, proceed as follows:

a. Remove the top and bottom covers.

b. Place the instrument on its right side.

c. Remove the two screws securing the YTO Phase Detector. (Refer to Figure 8-306) One screw is accessible through a hole in the A5 Power Supply Board A5A10. The other screw is accessible through an opening between the A5 Card Cage and the A5 Power Supply Board.

d. Refer to Figure 8-307 for the following steps.

e. Remove the screw located at the side of the YTO Phase Lock Deck A3MP102, which secures A3MP102 to the center divider A3MP18.

f. Loosen end of coaxial cable W7 on A1A9J2 and remove W7 from A3A9A1J1.

g. Move W7 out of the way and lift the YTO Phase Lock Deck to an upright position.

h. Secure the YTO Phase Lock Deck in the service position using the Servicing Support Screw.

i. For replacement, follow the above steps in inverse order.

**Removal and Replacement of 10 MHz Reference Oscillator A3A8.** To remove the 10 MHz Reference Oscillator, proceed as follows:

a. Remove the top and bottom covers.

b. Place the YTO Loop in the service position.



www.valuetronics.com

**SERVICE SHEET B (cont'd)**

c. Refer to Figure 8-307 for the following steps.

d. Remove the two screws which secure the Support-Mount A3MP69 to the center divider A3MP18.

e. Remove flexible cable A3W2 from the Reference Oscillator.

f. Remove cable A3A8W1 from A3A10J3.

g. Remove the Reference Oscillator.

h. For replacement, follow the above steps in inverse order.



www.valuetronics.com

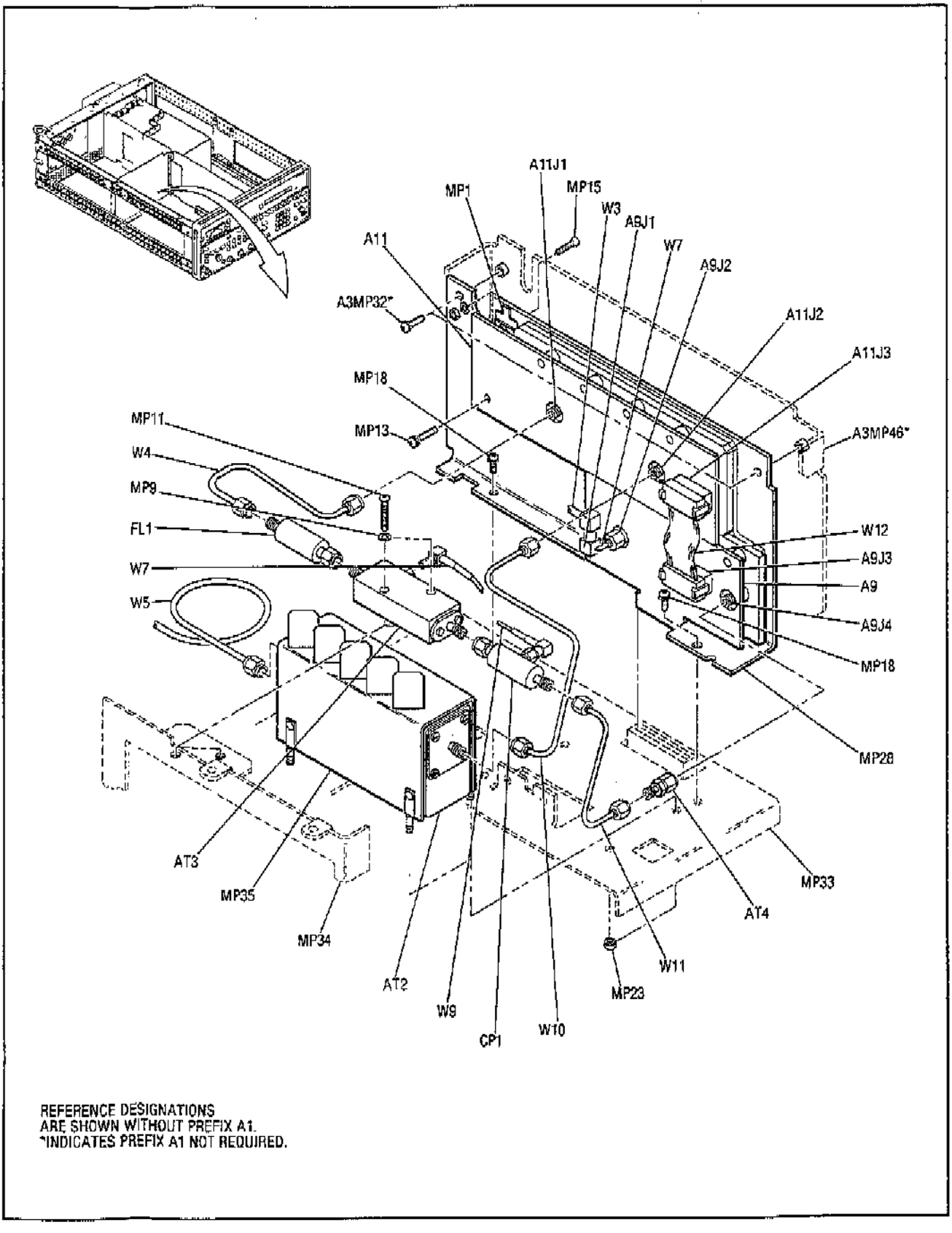


**Figure B-305. A1 RF Output Assembly — Pre Amp and Power Amp**

8-302C

www.valuetronics.com

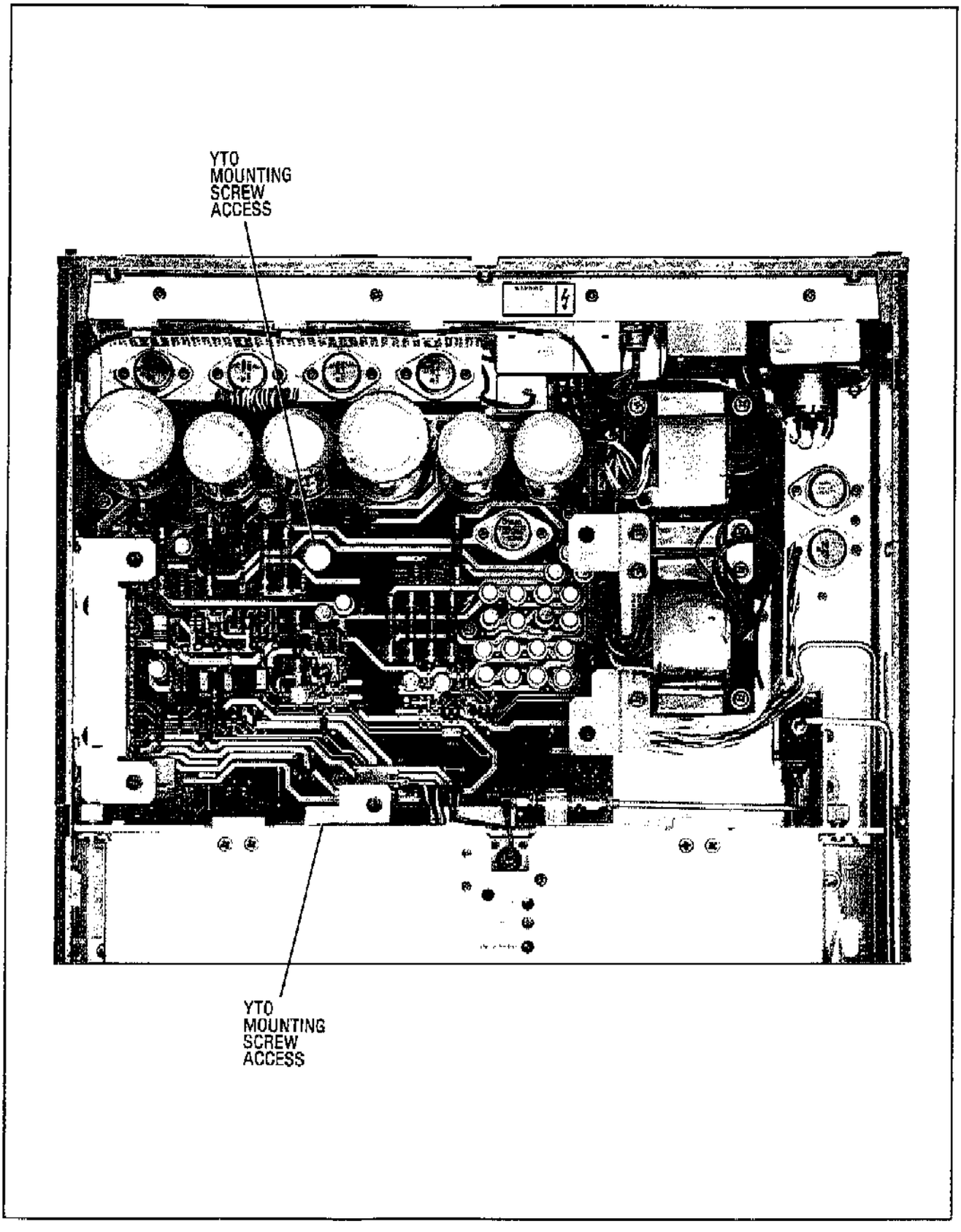


Figure 8-306. Location of YTO Mounting Screws



www.valuetronics.com

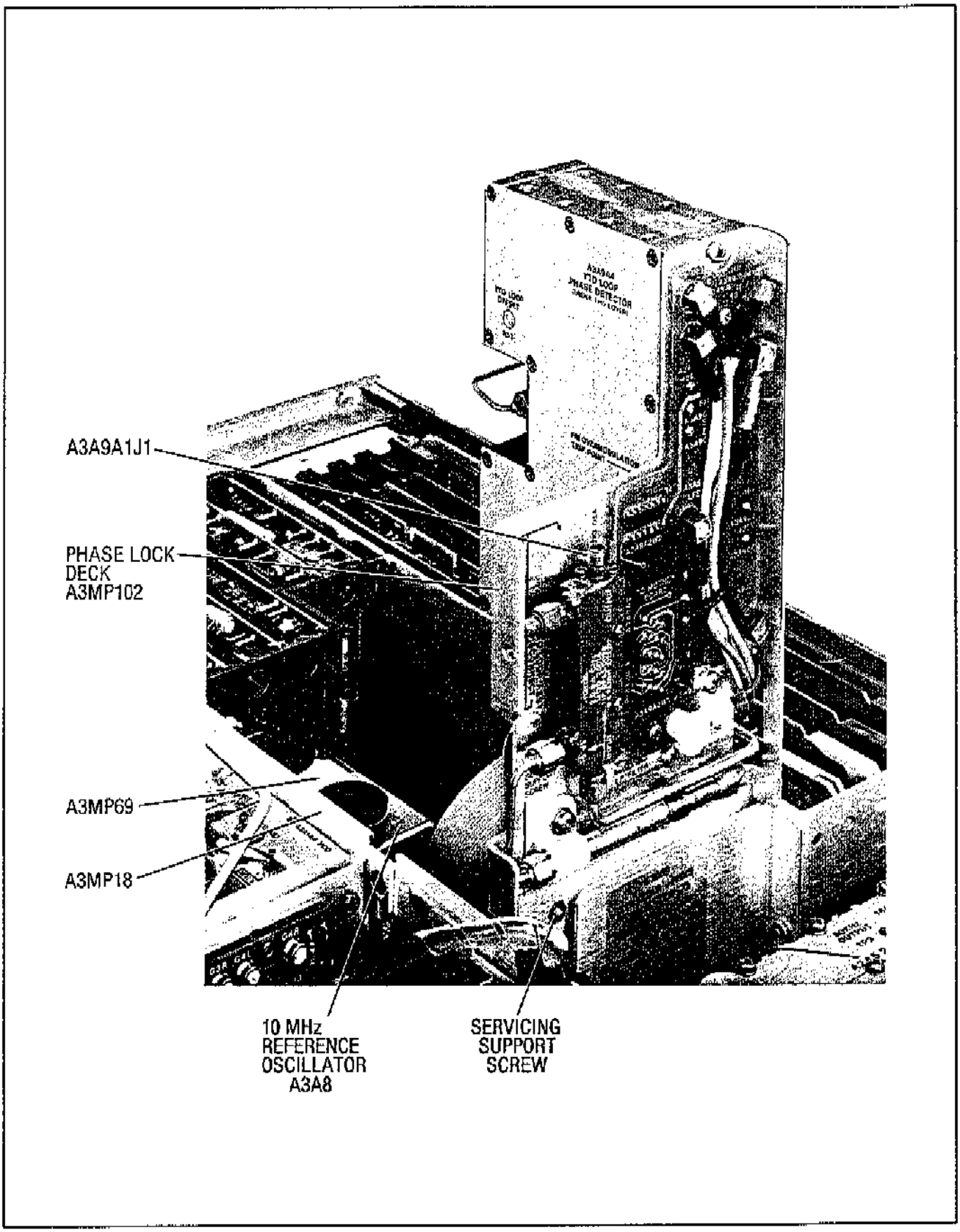


Figure 8-307. YTO Loop in Service Position



www.valuetronics.com

## SERVICE SHEET B (cont'd)

**A5 Card Cage A5MP39 in the Service Position.** To place A5MP39 in the service position, proceed as follows:

a Remove the A5 bottom cover.

c. Loosen the two captive screws securing the card cage to bracket A5MP15.

d. Loosen the captive screw securing the card cage to bracket A5MP14.

e. Remove cable A5W17 from Crystal Detector A5CR1.

f. Lift the card cage carefully, turn the front edge up 90 degrees and slide the brackets A5MP17 of the card cage into the slots of the main deck A5MP12.

g. Secure the card cage to A5MP12 by tightening the two captive screws.

h. For replacement, follow the above steps in inverse order.

**A5A9 Processor Board in the Service Position.** To place the A5A9 A5 Processor Board in the service postion, proceed as follows:

a. Remove the bottom cover of the instrument.

b. Lift the five snap fasteners securing the A5A9 board to the main deck.

c. The processor board may then be put in the service position by using the two fasteners at the left hand side (as viewed from the bottom front) of the processor board to secure the board in place.

**NOTE**

*To set the snap fasteners in place, hold the snap fastener between thumb and forefinger to separate the top and bottom of the fastener as far as possible. Feed the fastener into the bracket hole until the board is flush with the bracket, then push in top of fastener to secure the board in place.*

d. To remove the processor board remove the three cables from A5A9J1 through J3 and remove the board from the frame.

e. For replacement, follow the above steps in inverse order.



www.valuetronics.com

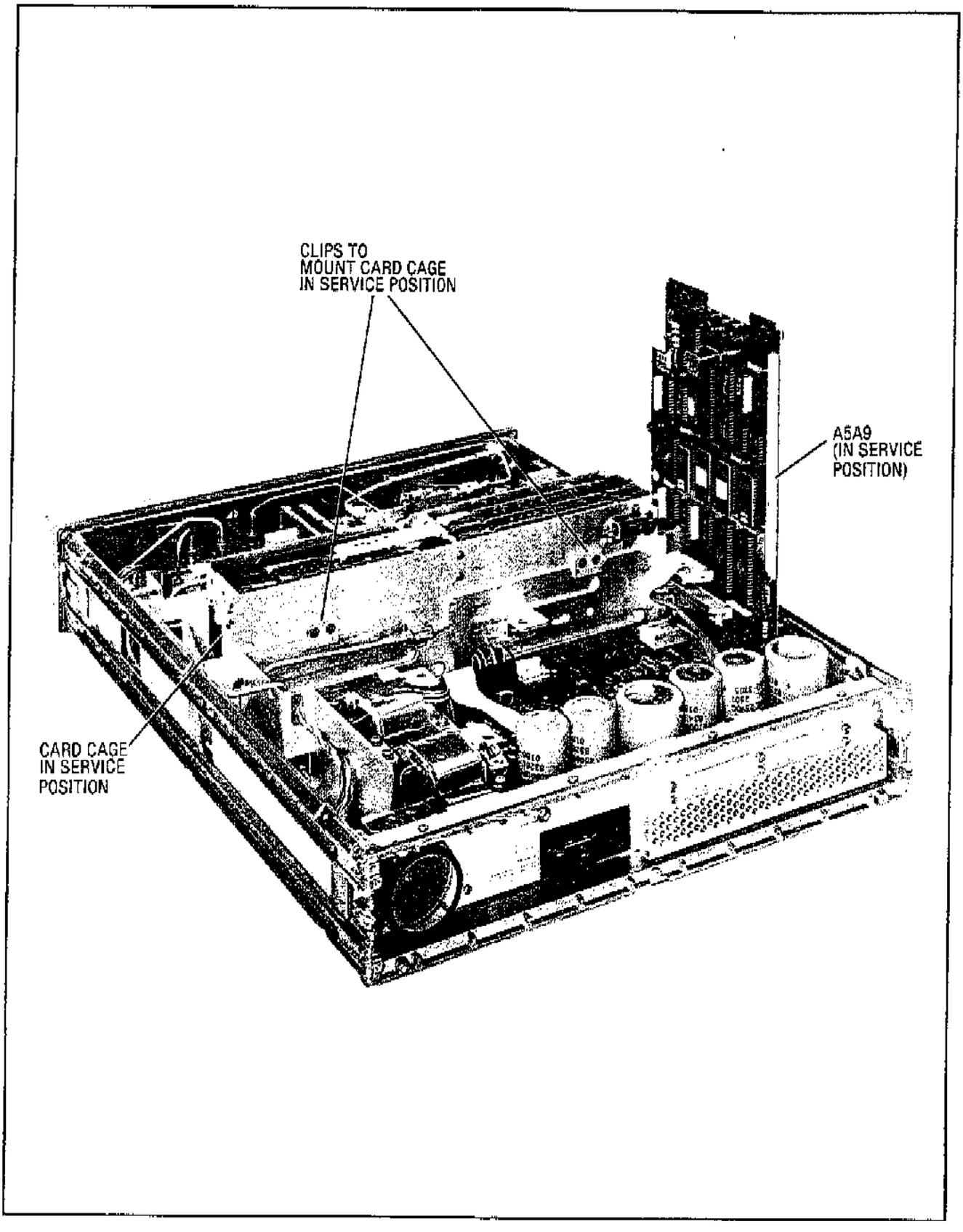


Figure 8-308. A5 Card Cage and Processor Board in Service Position

8-303/8-304b

www.valuetronics.com

## SERVICE SHEET B (cont'd)

**A5A10 Power Supply Board.** To remove the A5A10 Power Supply Board, proceed as follows:

a. Remove the bottom cover.

b. Place the A5A10 Processor Board in the service position.

c. Remove the below listed cables from the A5A10 connectors indicated.

| CABLE | A5A10 CONNECTOR |
|---|---|
| A5W86 | J1 |
| A5T1W1 | J2 |
| A5T2W1 | J3 |
| A5G1 (red) | J4 |
| A5G1 (black) | J5 |
| A5W83 | J6 |
| A5W81 | J7 |
| A5W85 | J8 |
| A5W84 | J9 |

d. Remove bracket A5MP31 by removing two screws.

e. Remove nine screws securing A5A10 to A5MP12.

f. Remove A5A10.

g. Place A5A9 back into its normal operating position..

h. for replacement, follow the above steps in inverse order.

**Filter Capacitors A5C1-C6.** To remove a filter capacitor, proceed as follows:

a. Remove the bottom cover.

b. Remove Processor Board A5A9.

c. Remove Power Supply Board A5A10.

d. Unsolder the leads of the capacitor from the power supply board and remove the capacitor.

e. For replacement, follow the above steps in inverse order.

**Transformers A5T1 and A5T2.** To remove one of the transformers, proceed as follows:

a. Separate the two units.

b. Place the Processor Board A5A9 in the service position.

c. Remove the three screws securing Transformer Board Support A5MP18 through the transformer to the Main Deck A5MP18. (Refer to Figure 8-309.)

d. Remove the two screws securing Transformer Brace A5MP19, through the transformers, to Main Deck A5MP12 and remove A5MP19 with screws and nuts.

e. Remove the remaining screws and nuts securing the transformer to the main deck.



www.valuetronics.com

f. Remove the two screws securing A5J2 to the main deck.

g. Pull A5J2 out far enough to permit removing the leads from the transformer to be removed.

h. Remove the appropriate transformer leads from A5J1/A5J2.

i. Remove the transformer.

j. For replacement, follow the above steps in inverse order.



www.valuetronics.com

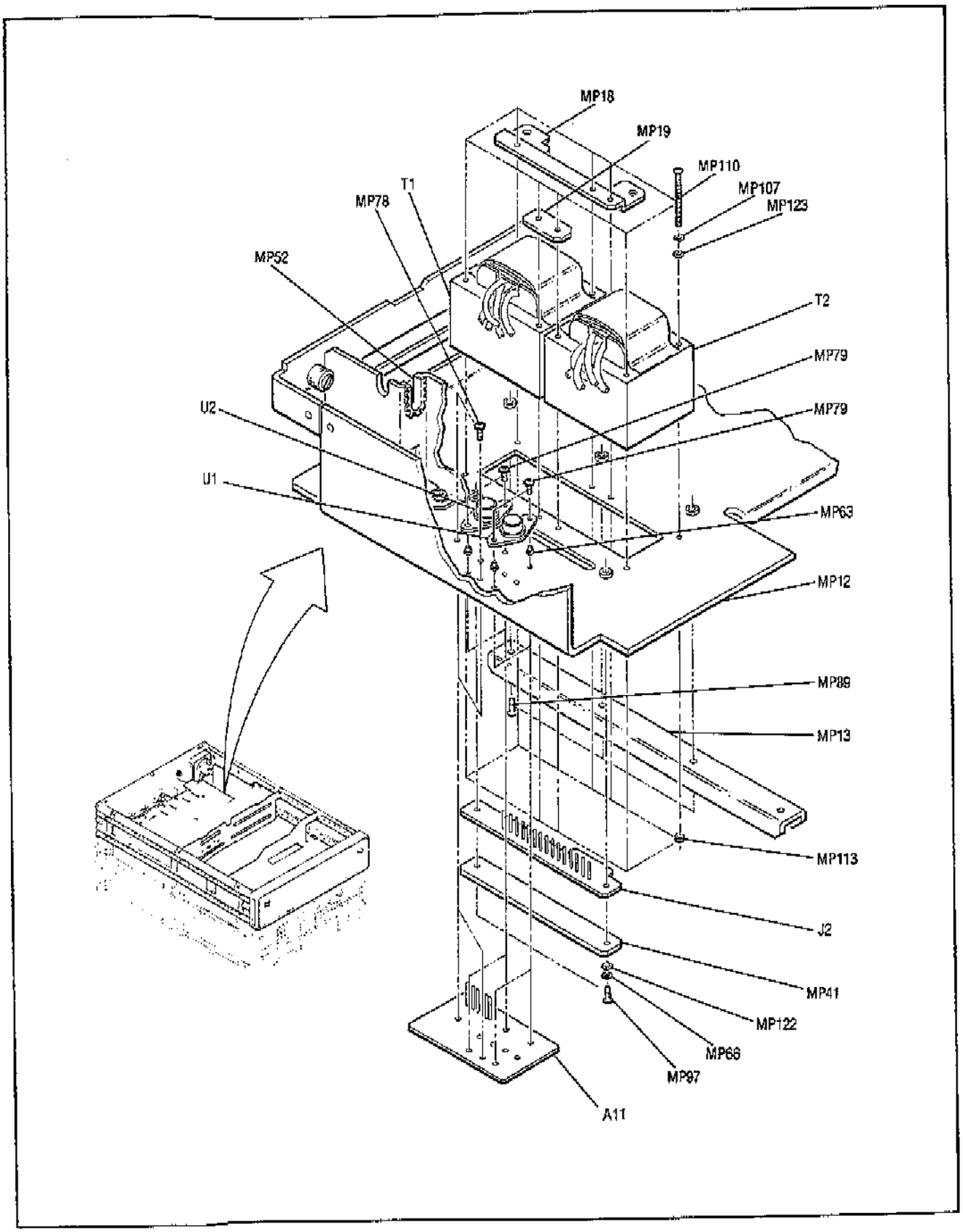


**Figure 8-309. A5 Power Transformers**



www.valuetronics.com

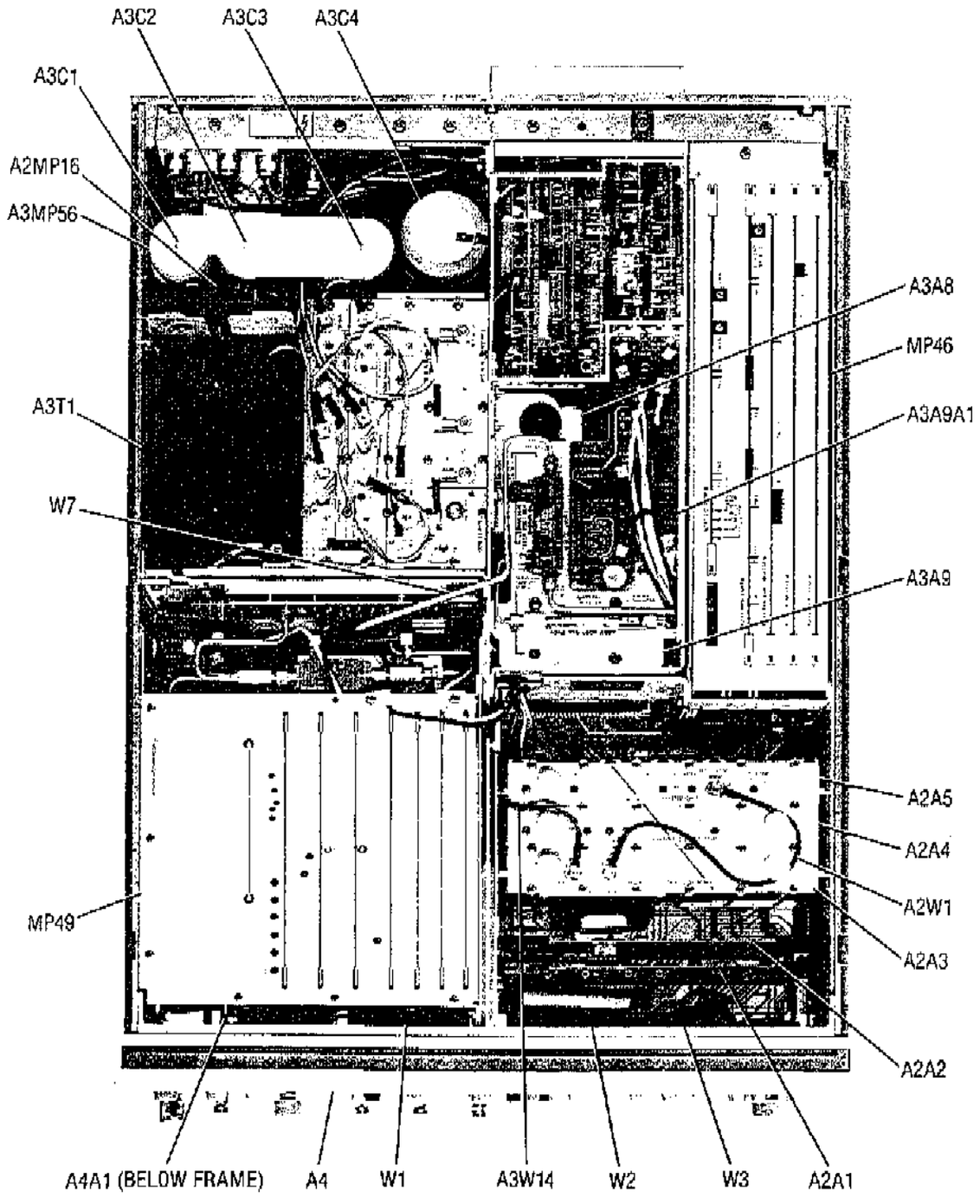


Figure 8-310. Top View, Upper Unit Component Location

8-305/8-306a

www.valuetronics.com

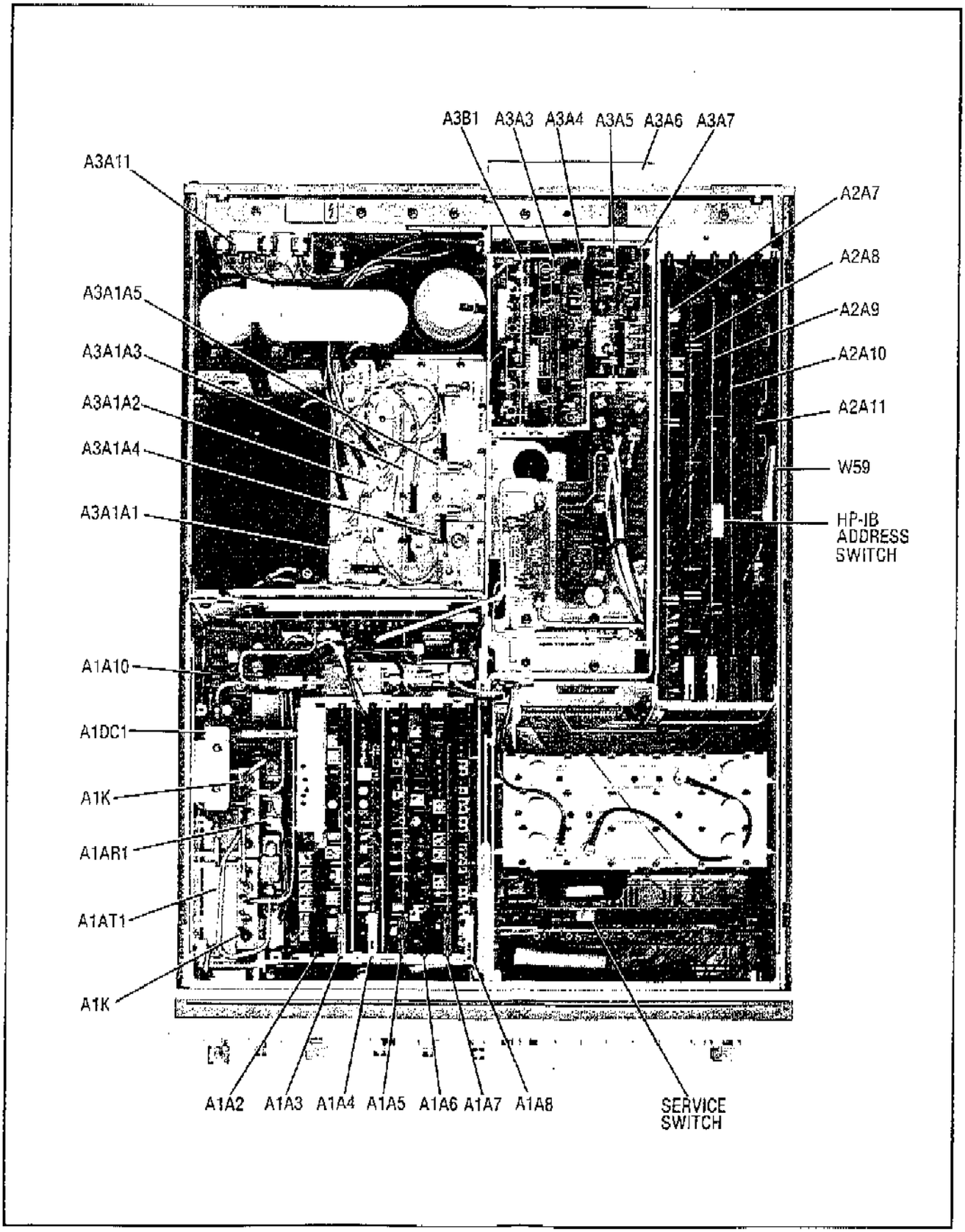


Figure 8-311. Top View, Upper Unit DCU and RF Covers Removed — Component Location

8-305/8-306b

www.valuetronics.com

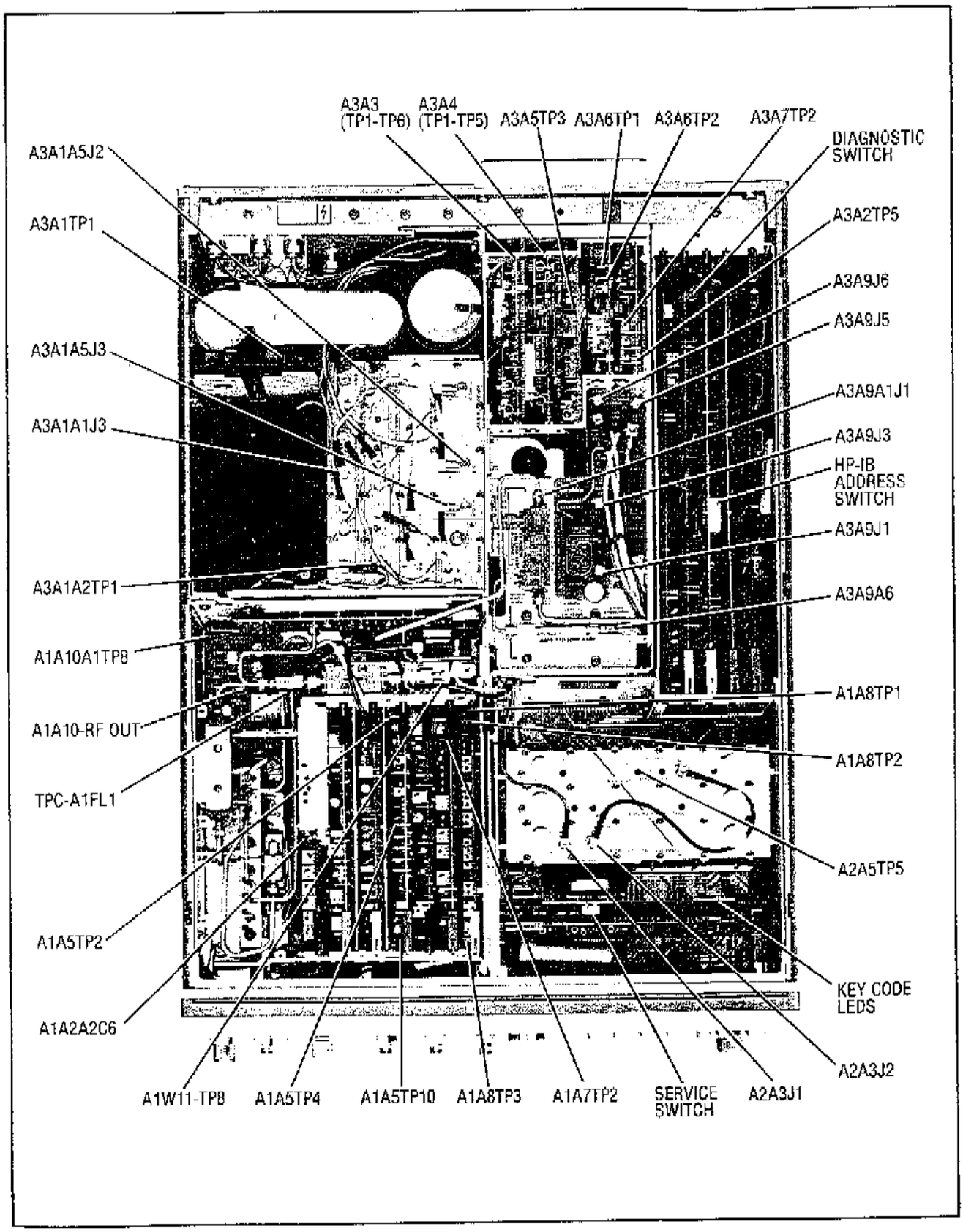


Figure 8-312. Top View, Upper Unit, Test Point Location

8-305/8-306

www.valuetronics.com

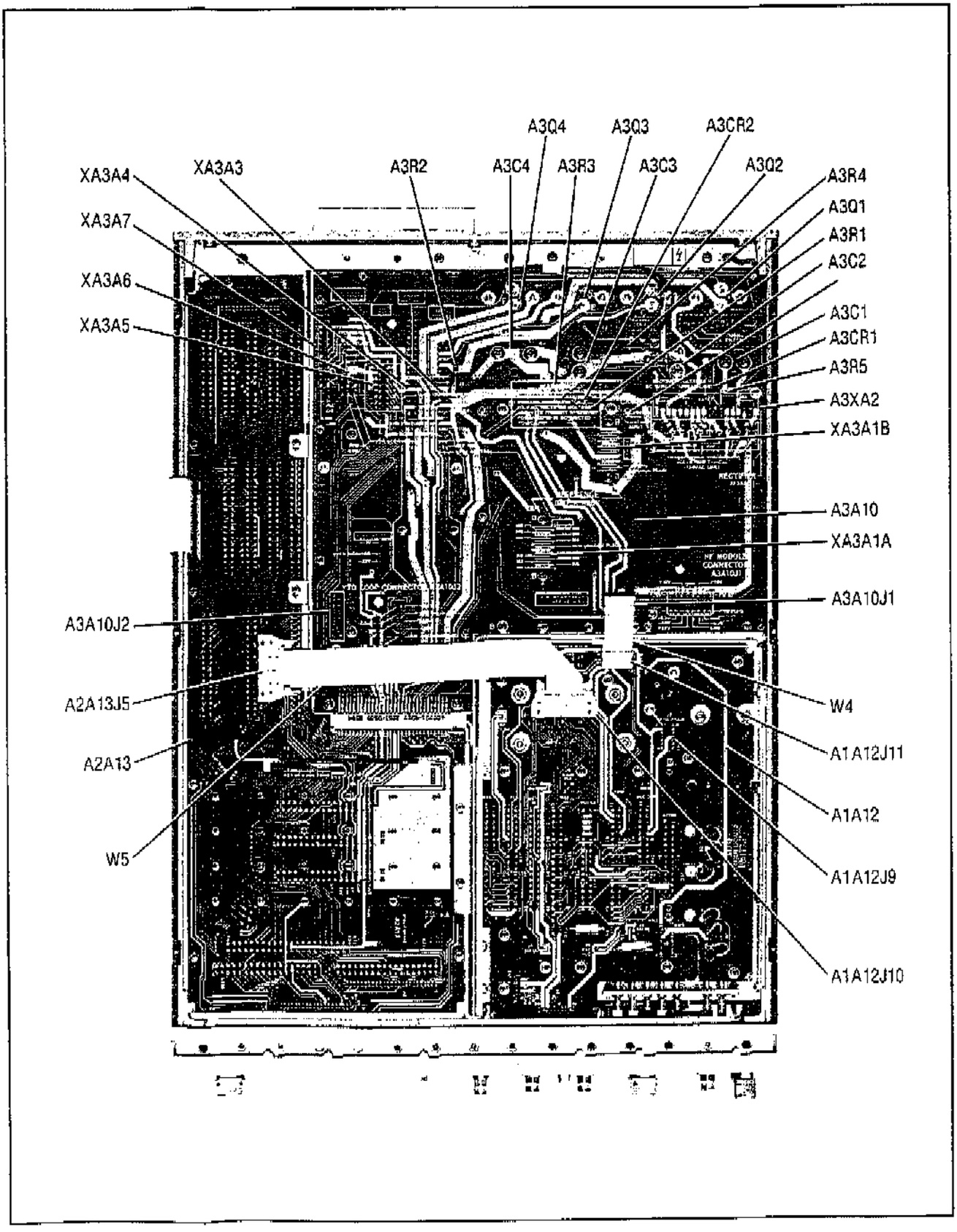


Figure 8-313. Bottom View, Upper Unit, Component Location



www.valuetronics.com

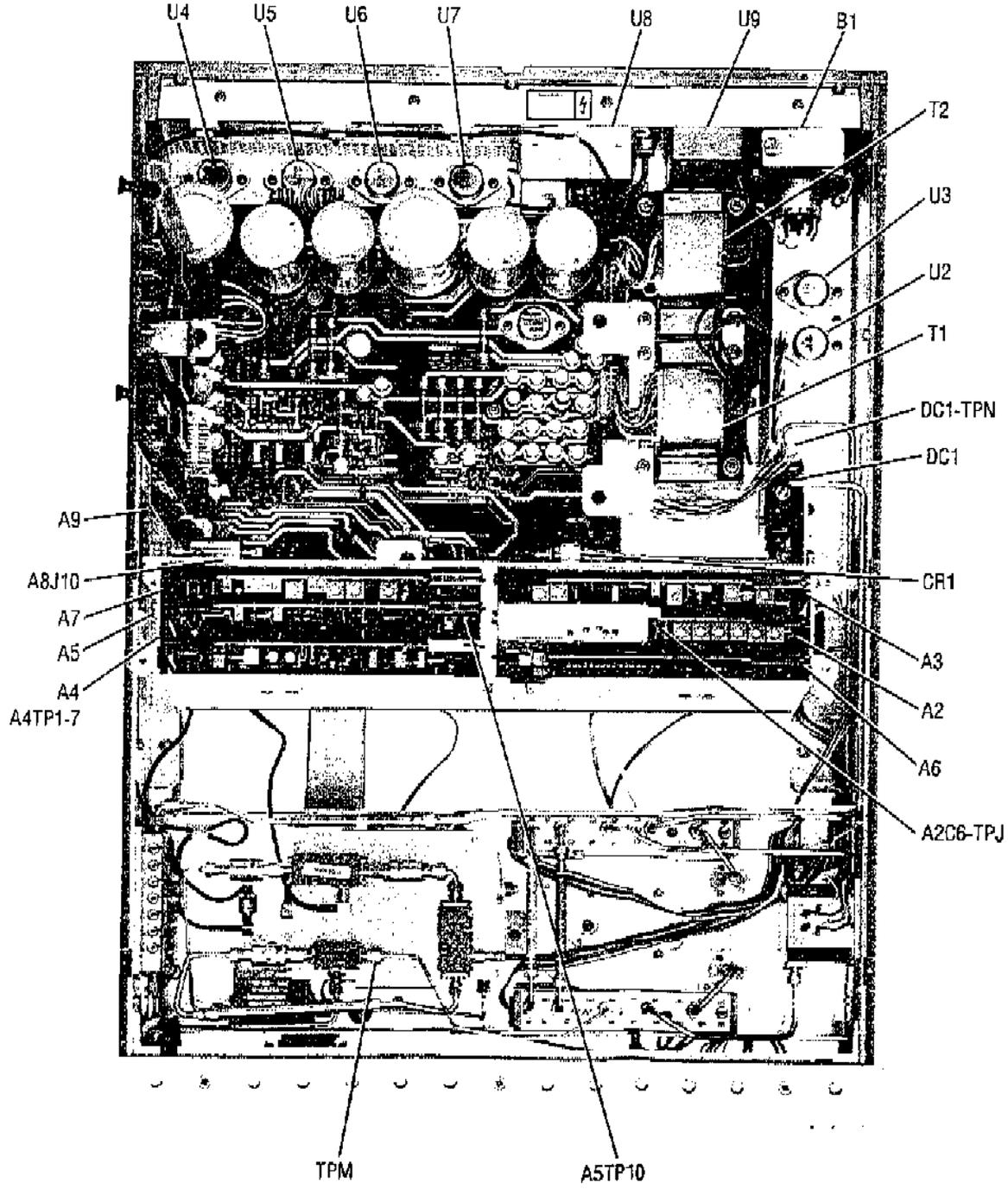


Figure 8-314. Bottom View, Lower Unit Test Point and Component Location

8-307/8-308a

www.valuetronics.com

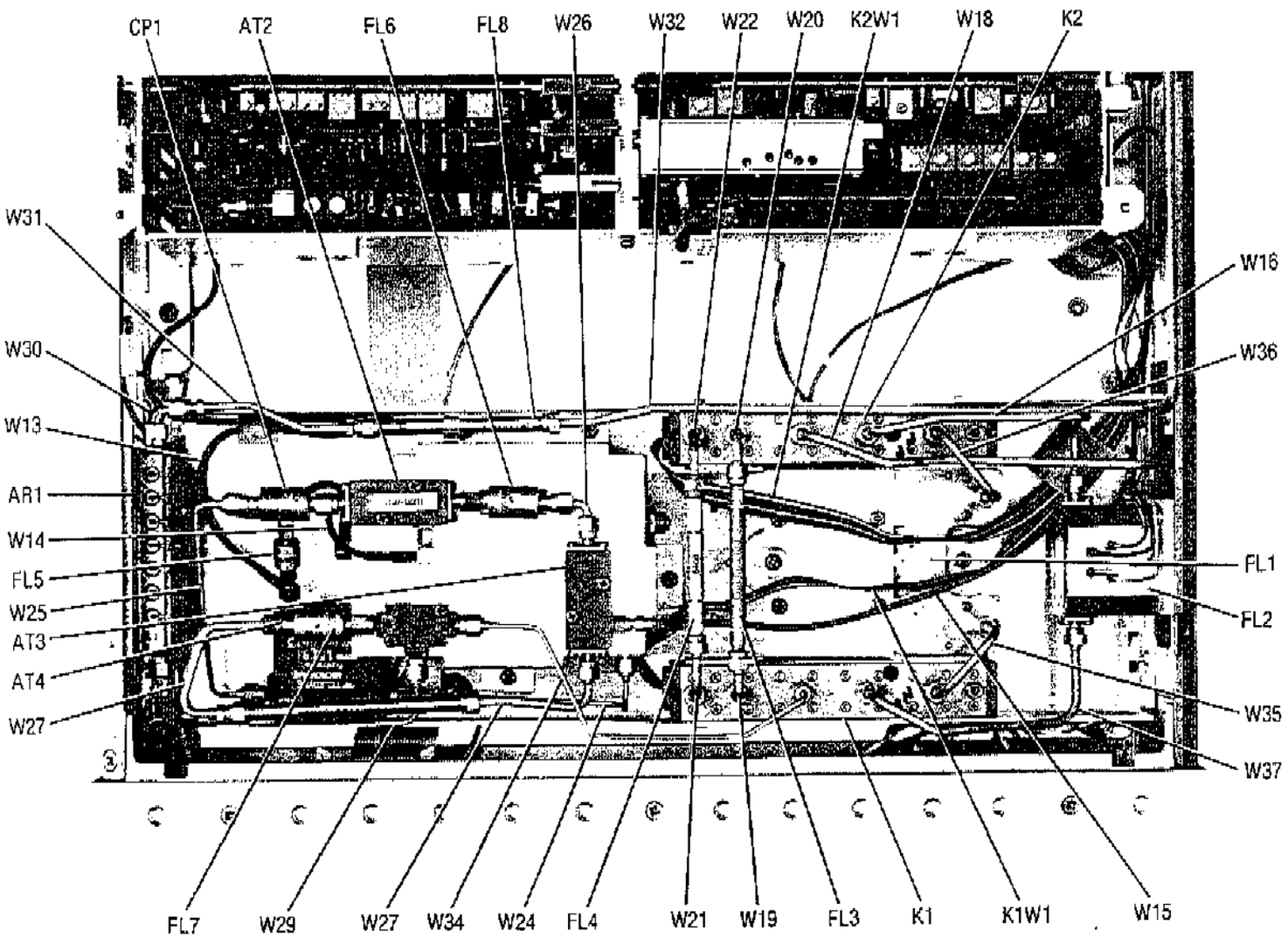


REFERENCE DESIGNATIONS
SHOWN WITHOUT PREFIX A5

**Figure 8-315. Bottom View, Lower Unit Component Locations**

8-307/8-308b

www.valuetronics.com

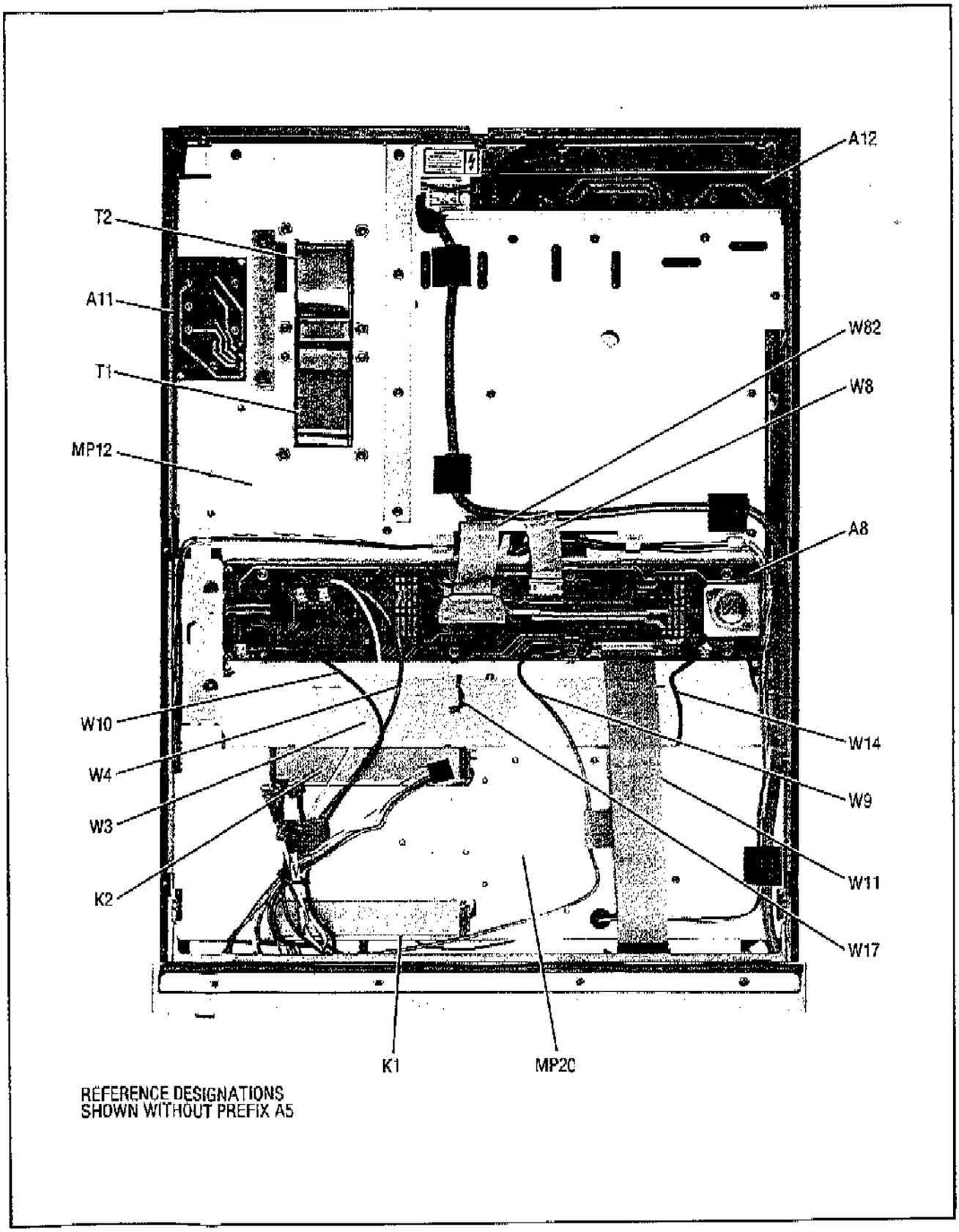


**Figure 8-316. Top View, Lower Unit — Component Location**



www.valuetronics.com