HP 4952A Protocol Analyzer

Operating Manual

www.valuetronics.com

Warranty

This Hewlett-Packard instrument product is warranted against defects in material and workmanship for a period of one year from the date of shipment. During the warranty period, HP will, at its option, either repair or replace products which prove to be defective.

For warranty service or repair, this product must be returned to a service facility designated by HP. Buyer shall prepay shipping charges to HP and HP shall pay shipping charges to return the product to the Buyer. However, Buyer shall pay all shipping charges, duties, and taxes for products returned to HP from another country.

HP warrants that its software and firmware designated by HP for use with an instrument will execute its programming instructions when properly installed on that instrument. HP does not warrant that the operation of the instrument, or software, or firmware will be uninterrupted or error free.

Limitation of Warranty

The foregoing warranty shall not apply to defect resulting from improper or inadequate maintenance by Buyer. Buyer-supplied software or interfacing, unauthorized modification or misuse, operation outside of the environmental specifications for the product, or improper site preparation or maintenance. No other warranty is expressed or implied. HP specifically disclaims the implied warranties of merchantability and fitness for a particular purpose.

Exclusive Remedies

The remedies provided herein are Buyer's sole and exclusive remedies. HP shall not be liable for any direct, indirect, special, incidental, or consequential damages, whether based on contract, tor, or any other legal theory.

©Copyright 1989 Hewlett-Packard Company.

Colorado Telecommunications Division
5070 Centennial Boulevard
Colorado Springs, CO, 80919-2497

www.valuetronics.com

Contents

Chapter 1: Introducing the HP 4952A

Initial Inspection 1-2
Line Voltage Selection 1-2
Grounding Requirements 1-2
Power Cord 1-2
Shipment 1-2
Transportation Disc 1-2
Using The Manuals 1-3
Getting Started Guide 1-3
Operating Manual 1-3
Power Up and Power Down 1-4
Turning the HP 4952A On 1-4
Turning the HP 4952A Off 1-4
Connecting the Pod 1-4
Reset 1-5
Major Features 1-5
Monitoring 1-5
Simulating 1-5
Remote Testing 1-5
Asynchronous Terminal Emulation 1-5
Microfloppy Disc Drive 1-5
Bit Error Rate Testing (BERT) 1-6
Printer and Video Output 1-6
The Front Panel 1-6
Display 1-6
Disc Drive 1-6
Keyboard 1-6

www.valuetronics.com

The Rear Panel 1-8
The Pod 1-10
The Top Level Menu 1-12
Using the HP 4952A 1-13
Instrument Hookup 1-13
Pod Hookup 1-13
Setup 1-14
Execute 1-14
Evaluate 1-14

Chapter 2: **Auto Configure**
Introduction 2-2
Using Auto Configure 2-2
Auto Configure Results 2-3
Auto Configure Algorithm 2-3
Auto Configure As a Starting Point 2-5
Bit Oriented Protocols (BOPs) 2-5
Extended Address and Control in HDLC 2-5
Character Oriented Protocols 2-6
Auto Configure Error Messages 2-6
Waiting For Data 2-6
Waiting For Idles 2-6
Waiting For Frames 2-7
Waiting For Messages 2-7
No Pod Attached 2-7
Invalid Sync Characters 2-7
Invalid Asynchronous Speed / Invalid Synchronous Speed 2-7
Invalid Async Framing 2-7
Can't Configure Within the Time Limit 2-7

www.valuetronics.com

Chapter 3: The Setup Menu

Setup Introduction 3-2
Setup Controls Other Menus 3-2
Using the Setup Menu 3-2
When To Use the Setup Menu 3-3
Saving Setups 3-3
Bit Oriented Protocols 3-4
Bit Oriented Setup Definitions 3-4
Bit Oriented Protocol (BOP) Setup 3-5
BOP Menu Selections 3-7
Configure To Bit Oriented Lines 3-8
BSC Setup Definitions 3-9
BSC Setup Selections 3-10
BSC Setup 3-10
Character-Oriented PRotocols (COPs) 3-11
When to Use the Char Menu 3-11
Char Setup Definitions 3-12
Char Setup Selections 3-13
Char Setup 3-14
Hexadecimal Entry and Parity 3-14
Sync Characters 3-15
Drop Sync Characters 3-16
Drop Sync and Error Checking 3-16
Capturing Unknown Data 3-17
Finding the Correct Framing 3-17
Eliminating Superfluous Data 3-18
Unusual Protocol Settings 3-19
IPARS Setup 3-19
Modified Error Check 3-21
X.75 3-21
Extended Asynchronous Baud Rates 3-22
Compatibility with other HP Protocol Analyzers 3-23

www.valuetronics.com

Chapter 4: **Introduction To Monitoring**

Introduction 4-2
Two Types Of Monitoring 4-2
Monitoring the Line 4-3
Hookup 4-3
Setup 4-4
Display Mode 4-4
Monitor the Buffer 4-5
Setup 4-5
Collecting Data From the Line 4-5
The Monitor Menu 4-6
Monitor Menu Softkey Commands 4-7
Start 4-7
Stop 4-7
Inc Ctr 4-7
If 4-7
When Trig 4-7
Highlight 4-8
Beep 4-8
Reset 4-8
Goto Blk 4-8
Message 4-8
Gosub Block 4-8
Return 4-8
Insert Line 4-8
Insert Block 4-9
Delete Line 4-9
Delete Block 4-9
Delete Prg 4-9
Print Prog 4-9
Move Crsr 4-9
Move Cursor 4-9
Compatibility With Other HP Protocol Analyzers 4-10

www.valuetronics.com

Monitor Programs 4-11
Softkey Programming 4-11
Setup 4-11
Moving Through the Menu 4-11
Blocks 4-12
Inserting and Deleting Lines and Blocks 4-12
Inserting and Deleting Characters 4-12
Executing Monitor Programs -- The Run Menu 4-12
Triggering 4-13
Defining Triggers 4-13
Triggers Prove a Reference 4-13
Types of Triggers 4-14
Marking Triggers 4-15
Measuring Time 4-16
Measuring Time Between Triggers 4-16
How to Access Timers 4-16
Reset a Timer to Zero 4-17
Stop a Timer Without Resetting 4-17
How Timers Work 4-18
Cursor Timing 4-18
The Effect of the Data Filter on Timing 4-18
Counting Events 4-19
Accessing the Inc Ctr Softkey 4-19
Countable Events 4-19
Resetting Counters 4-20
Decrementing Counters 4-20
Example 1: Counting Parity Errors 4-20
Example 2: Counting Positive Lead Changes 4-20
Conditional Branching 4-21
Accessing the If Softkey 4-21
When is Lead Status Checked? 4-21
Example: 'If Lead' 4-22
'If Counter' 4-22
Example: 'If Counter' 4-22
How 'If' and 'When' are Different 4-23
Combining 'If' Statements 4-23
Combining 'If' and 'When' 4-24

www.valuetronics.com

Unconditional Branching 4-25
'If' and 'When' Always Force a Branch 4-25
Program Pauses 4-26
Using a Timer to Pause 4-26
Using a Counter to Pause 4-27
Starting and Stopping 4-28
'Start' and 'Stop' Need a Reference 4-28
Filtering Data with 'Start' and 'Stop' 4-28
'Start' and 'Stop' Disc 4-29
'Start' and 'Stop' Display 4-30
'Stop Tests' 4-31
Commenting 4-32
Uses for 'Message' 4-32
How to Enter Messages 4-32
How to Display Messages During Execution 4-33
Example: Using a Prompt 4-33
Subprograms 4-34
Example 1: Subprograms 4-34
Example 2: Using a Delay Repeatedly 4-35
Monitor Error Messages 4-36
Max Length 4-36
Max Strings 4-36
Menu Full 4-36
Invalid Mon/Sim Menu 4-36
No File; Run Aborted 4-36
File Already Exists 4-36
DLC Error 4-36
Monitor Status Messages 4-37
Text 4-37
Not Text 4-37
Hex 4-37
Not Hex 4-37
Binary 4-37
End Frame 4-37
Start Flag 4-37

www.valuetronics.com

Chapter 5: Triggering

Introduction 5-2
When Statements Define Triggers 5-2
Triggers Provide a Reference 5-2
Triggers Stop Execution 5-3
Trigger Types 5-4
Multiple Triggers 5-5
ORing Triggers 5-5
Sequencing Triggers 5-6
Overlapping and Duplicate Triggers 5-6
Continuation Of Triggering 5-7
Branching From a Trigger 5-8
Triggering On Characters 5-9
How To Select Characters 5-9
Hex or Binary Equivalent Of a Character 5-10
Edit Character Strings 5-10
Setup After Typing a String 5-10
Character Not On the Keyboard 5-10
Binary and Hex Characters 5-10
Masking Out Characters 5-11
Excluding Characters 5-11
Flags and Frame Check Characters 5-11
Parity 5-11
Level 2 and 3 Assisted Mode 5-11
Triggering On Errors 5-12
Example: Counting Errors 5-12
Triggering On Leads 5-13
Example: Looking For Illegal RTS/CTS Transitions 5-13
Triggering On Timers 5-14
Example: Beeping After Two Minutes 5-14
Triggering On Softkeys 5-15
Example: Using a Prompt 5-15

www.valuetronics.com

Chapter 6: Level 2 and 3 Assisted Mode

Introduction 6-2
'Send' and 'When' Strings 6-2
Accessing the Levl 2 and Levl 3 Softkeys 6-2
Level 2 Softkeys 6-3
Level 3 Softkeys 6-3
General Procedure For Level 2 and 3 Assist 6-3
The Levl 2 Softkey 6-4
The Address Field 6-4
Frame Type 6-5
The Levl 3 Softkey 6-7
Selecting Levl 3 Before Levl 2 6-7
Three Entry Points -- GFI, LCN, Packet Type 6-7
The GFI Field 6-8
The LCGN Field 6-8
The LCN Field 6-8
The Packet-Type Field 6-9
Entering a Level 2 'When' String 6-10
Entering a Level 3 'When' String 6-12
Entering a Level 2 'Send' String 6-15
Entering a Level 3 'Send' String 6-17

Chapter 7: Simulating

Introduction 7-2
Connect the HP 4952A For Simulating 7-2
Device Selection 7-3
Setup for Simulating 7-3
Lead Handshaking 7-3
The Simulate Menu 7-4

www.valuetronics.com

Simulate Softkeys 7-5
Start 7-5
Stop 7-5
Inc Ctr 7-5
If 7-5
When 7-5
Send 7-5
Highlight 7-6
Beep 7-6
Reset 7-6
Goto Blk 7-6
Set Lead 7-6
Wait 7-6
Message 7-6
Gosub Block 7-6
Return 7-7
Insert Line 7-7
Insert Block 7-7
Delete Line 7-7
Delete Block 7-7
Delete Prg 7-7
Print Prog 7-7
Move Crsr 7-7
Compatibilty With Other HP Protocol Analyzers 7-8
Simulate Functions 7-9
Sending Characters 7-9
Setting Leads 7-9
Delaying Output 7-9

www.valuetronics.com

Sending Characters 7-10
Handshaking Requirements 7-10
How to Select Send Characters 7-10
Control Characters 7-11
When a Character is Not on the Keyboard 7-11
Binary and Hex Characters 7-12
How to Edit Character Strings 7-12
Sending Idles 7-12
Block Check Characters 7-12
Flags and Frame Check Characters 7-13
Parity Bits 7-13
Zero Bit Insertion 7-14
Changing the Setup After Typing the String 7-14
Level 2 and 3 Assisted Mode 7-14
Using Timers with Send 7-15
Controlling Interface Leads 7-16
When Are Leads On or Off? 7-16
Which Leads Can Be Controlled? 7-16
HP 4952A Lead Status During Simulation 7-16
HP 4952A Lead Status When Not Simulating 7-17
Example: Simulating a DTE 7-17
Delaying Output 7-18
Wait Controls Output Only 7-18
Delaying Characters or Leads 7-18
Simulate Error Messages 7-19
Max Length 7-19
Max Strings 7-19
Menu Full 7-19
Invalid Mon/Sim Menu 7-19
No File; Run Aborted 7-19
File Already Exists 7-19
DLC Error 7-19
Simulate Status Messages 7-20
Text 7-20
Not Text 7-20
Hex 7-20
Not Hex 7-20
Binary 7-20
End Frame 7-20
Start Flag 7-20

www.valuetronics.com

Chapter 8: The Run Menu

Introduction 8-2
Run Menu Softkeys 8-2
Monitor Line 8-2
Monitor Buffer 8-2
Simulate 8-3
Data Filter 8-3
Data Filter Definitions 8-4
BERT 8-5
Displaying Data 8-6
Full Duplex and Half Duplex Data 8-6
Blinking Characters 8-6
Run-Time Messages 8-7
Hex/Text 8-7
Stop Display/Start Display 8-7
Buf = n 8-7
Prg = n 8-7
Summary/Data Display 8-7
Exploding Diamond (< >) 8-8
No Pod Attached 8-8
Buffer Overflow 8-8
Receiver Overrun 8-8
Invalid Monitor/Simulate Menu 8-8

Chapter 9: The Examine Data Menu

Introduction 9-2
Viewing the Buffer 9-2
How To Load the Buffer 9-2
Examine Data Menu Features 9-3
Viewing Timers and Counters After a Run 9-3
Viewing the Entire Buffer 9-3
Bit Shifting 9-3
Decoding Characters 9-3
Cursor Timing 9-3
Decoding High Level Protocols 9-4
Cursor Memory 9-4
Extended Memory Board (Option 002) 9-4

www.valuetronics.com

Examine Data Menu Softkeys 9-5
Hex and Text 9-5
Roll Up and Roll Down 9-5
Next Page and Prev Page 9-5
Timers and Counters 9-5
Specify Block 9-5
Next Hilit 9-6
Next Segment and Prev Segment 9-6
Bit Shift 9-6
Start Time and End Time 9-7
Change Display 9-7
Print Summary and Data 9-7
Displaying Data 9-8
How Setup Affects the Display 9-9
Blinking Characters 9-9
More On Cursor Timing 9-13
Lead Changes 9-13
COP Send Strings 9-13
Received COPs 9-13
Bit Oriented Protocols 9-14
Timing Resolution 9-14
Cursor Timing Limits 9-15
The Effect Of the Data Filter Upon Timing 9-15
Examine Data Error Messages 9-17
No data in buffer -- Use EXIT key to exit 9-17
No displayable data in buffer for the selected display format 9-17
Disc removed during a read operation 9-17
Disc read error: buffer data invalid 9-17
End of valid data 9-17
Start of valid data 9-17
No more highlights 9-17
End of disc file 9-17
End of Data Segment 9-18
Start of Data Segment 9-18

www.valuetronics.com

Chapter 10: Bit Error Rate Tests (BERT)

Definitions 10-2
PRBS (Pseudo Random Bit Sequence) 10-2
Bit Error Rate 10-2
Blocks 10-2
Block Error Rate 10-2
Block Sizes 10-2
BERT Menu Softkeys 10-3
Pattern 10-3
Block Size 10-3
Duration 10-3
Bits/Sec 10-3
Framing 10-3
Parity 10-3
BERT Menu Selections 10-4
Compatibility With the HP 4952A Protocol Analyzer 10-5
Running a BERT Test 10-5
Data Screen 10-5
Completion Of a Test 10-5
% Error-Free Seconds 10-5
Exit Key 10-5
Setup Summary 10-5
Data Screen Definitions 10-6
Elapsed Seconds 10-6
Errored Seconds 10-6
% Error-Free Seconds 10-6
Block Count 10-6
Block Errors 10-6
Bit Count 10-6
Bit Errors 10-6
Inject Error 10-7
Inject 10 Errors 10-7
Compatibility with other BERT Testers 10-7
Synchronization 10-7
Handshaking 10-7
DCE BERT 10-8
Loading the Application 10-8
DCE BERT Setup 10-9

www.valuetronics.com

BERT Error Messages 10-13
Bad Data - Cannot Sync 10-13
Data Error - Sync Lost 10-13
No Data Present 10-13
Clock Slipped During Run 10-13
Sync Lost One or More Times 10-13
Examples 10-14
Example 1: End-to-End Testing 10-14
Example 2: Loopback Testing 10-15
Other Tests 10-16
Quick Brown Fox Tets 10-16
Startup Tests 10-16

Chapter 11: The Remote Menu

Introduction 11-2
Remote Setup 11-2
Remote Operations 11-3
Resetting to Top Level 11-3
Lockout Slave's Keyboard 11-3
Ending Remote Operations 11-3
Remote Restrictions 11-3
Remote Data Transfer 11-4
Controller Softkeys 11-9
ID Slave 11-9
Slave Status 11-9
Execute Run 11-9
Reset Slave 11-9
Upload Timers and Counter 11-9
Lock Keyboard 11-9
Enable Keyboard 11-9
Run Application 11-10
Download Application 11-10
Upload Application 11-10
Download Menu 11-10
Delete Application 11-10
Download Data 11-10
Upload Data 11-10
Remote BERT 11-10
Remote Menu -- Controller Configuration 11-11
Remote Menu -- Slave Configuration 11-11

www.valuetronics.com

Modem Operations 11-12
Modem Strings 11-12
Modem Handshaking 11-12
Operations Without Modems 11-12
Remote X.25 Packet Switched Network 11-13
Tape To Disc File Transfer 11-13
Remote Status Messages 11-14
Application Cannot be Run on 4952 11-14
Application Already Loaded 11-14
Invalid Application for 4952 11-14
Menus Incompatible with 4952 11-14
Must Reset Slave First 11-14
Must Reset Slave to Top Level 11-14
No Data in Buffer 11-14
No Application Resident 11-14
Reset Slave and Retry Operation 11-14

Chapter 12: Mass Storage

Introduction 12-2
The Disc Drive 12-2
The Opional Extended Memory Plus Memory Board (Opt 002) 12-2
The Mass Store Menu 12-3
MSD=RAM 12-3
Directory 12-3
Format 12-4
Load 12-4
Store 12-4
Delete 12-5
Recover 12-5
Pack Disc 12-5
Rename 12-6
Print Directory 12-6
Loading From Disc 12-7
Menus May Be Changed After Loading 12-7
Loading Files Larger Than the Buffer 12-7
Autostart Files 12-8

www.valuetronics.com

Storing To Disc 12-9
What You Can Store To Disc 12-9
Storing Data Directly From the Line 12-10
The Extended Memory Board (Option 002) 12-11
The Extended Capture Buffer (ECB) 12-11
The RAM Disc 12-11
Using the RAM Disc 12-12
Select the RAM Disc 12-12
Using the RAM Disc 12-12
The Extended Capture Buffer (ECB) 12-13
Summary Of Facts About the ECB 12-13
Loading the ECB 12-13
Storing To Disc From the ECB 12-14
Printing from the ECB 12-14
Memory Blocks and Disc Sectors 12-15
The Disc Drive 12-16
Type of Discs 12-16
Care and Handling of Discs 12-16
Cleaning the Disc Drive 12-17
Inserting a Disc 12-18
Removing a Disc 12-18
Write-Protecting a Disc 12-19
Copy Disc Utility 12-20
Copying Discs 12-21
Archiving All Contents Of RAM Disc To Flexible Disc 12-22
Restoring the Archive File On Flexible Disc To RAM Disc 12-23
Directory 12-23
Delete 12-23
Format 12-24
Pack Disc 12-24
Print Dir 12-24

www.valuetronics.com

Chapter 13: ASCII Printer Output

Introduction 13-2
Hookup 13-2
Setup 13-3
Character Code 13-3
Parity 13-3
Bits/sec 13-3
Handshake 13-3
Line Terminators 13-3
Carriage Return Delay 13-3
Enquire/Acknowledge (ENQ/ACK) Hand Shaking 13-4
XOn/XOff Hand Shaking 13-4
Control Lead Hand Shaking 13-4
Getting Things Printed 13-5
Printed Output 13-6
Printing the Entire ECB 13-7
How the Printer Displays Characters 13-8
Hexadecimal Characters 13-8
ASCII Control Characters 13-9
Special Characters 13-9
Lead Levels 13-9
Print Error Messages 13-10
Handshake Error 13-10
Printer Error 13-10
Remote Timeout 13-10

Chapter 14: Async Terminal Emulator

Introduction 14-2
Equipment Supplied 14-2
Applications 14-2
Specifications 14-3
Loading the Terminal Emulator Application 14-4
Terminal Setup 14-4
Setup Menu 14-4
Setup=Simulate 14-6
Simulate 14-6
Execute 14-7

www.valuetronics.com

Terminal Operation 14-8
VT-100 Terminal Emulation 14-9
Lead Control 14-10
Hardware Handshake 14-11
Software Handshake 14-11
ENQ/ACK Handshake 14-11
Manual Flow Control 14-11
Chapter 15: Interface Pods
Introduction 15-2
RS-232C/V.24 Interfaces 15-2
RS-449 Interfaces 15-3
V.35 Interfaces 15-3
Interface Pod Installation 15-4
HP 18179A Interface (RS-232C/V.24) 15-5
LEDs 15-6
Disconnect Switches 15-6
Connectors For RS-232C/V.24 Y-Cable 15-6
Full Breakout Box 15-6
Jumper Pins 15-6
+/-12 V Source Pins 15-7
Mark/Space Indicator 15-7
Instrument Cable Connector 15-7
The HP 18180A Interface (RS-232C/V.24 and RS-449) 15-8
Connectors 15-8
Jumper Pins 15-8
LCD Indicators 15-8
Source Pins 15-9
Disconnect (breakout) Switches 15-9
Mark/Space Monitor 15-9
The HP 18260A Interface (RS-232C/V.24 and X.21) 15-10
RS-232C Portion 15-10
X.21 Portion 15-11
The HP 18174A Interface (RS-449) 15-12
The HP 18177A Interface (V.35) 15-14

www.valuetronics.com

The HP 18160A (RS-232C and V.35) 15-15
Monitor, DCE Simulate, DTE Simulate Modes 15-15
LEDs 15-15
Jumper Pins 15-16
Source Pins 15-16
Disconnect (breakout) Switches 15-16
Mark/Space Indicator 15-16
The HP 18270A ISDN Interface Module 15-20
HP 18270A ISDN Interface Module Hardware Only 15-20
HP 18268A ISDN Software Only 15-20

Chapter 16: Examples
Example 1: Measuring a Single RTS-CTS Delay 16-2
Example 2: Monitoring a DCE 16-3
Example 3: Monitoring a DTE 16-3
Example 4: FOX Message 16-4
Example 5: Counting Parity Errors 16-5
Example 6: Measuring More Than One RTS-CTS Delay 16-8
Example 7: Simulating RTS-CTS Delay 16-10
Example 8: Loopback 16-12
Example 9: END-TO-END: Transmit First 16-14
Example 10: END-TO-END: Receive First 16-16

Appendix A: Error Messages
Error Messages A-2

Appendix B: Specifications and Accessories
Specifications B-2
Operating Characteristics B-3
Accessories B-6
Options B-8
Interface Accessories B-9

www.valuetronics.com

Appendix C: OSI Level 2 and 3 Tables
Level 2: The Data Link Interface C-2
Character Oriented Protocol C-2
Bit Oriented Protocol C-2
Types of BOP Frames C-3
Unnumbered Format Commands C-4
Unnumbered Format Responses C-4
Sample Monitor Menu Triggers C-5
Level 3 ..... C-6
Packet Construction (Modulo 8) C-6
Data Packets C-7

Appendix D: Service Information
Power Requirements D-2
Adjustments D-5
Performance Verification D-5
Packaging D-10

Appendix E: External Video Output
Introduction to RS-170 ..... E-2

Appendix F: Blank

Appendix G: Data Code Tables

www.valuetronics.com

Illustrations

Chapter 1: Introducing the HP 4952A
Figure 1-1. The Front Panel 1-7
Figure 1-2. The Rear Panel 1-9
Figure 1-3. The HP 18179A Interface Pod 1-11

Chapter 2: Auto Configure
Figure 2-1. Auto Configure Algorithm 2-4

Chapter 3: The Setup Menu

Chapter 4: Monitoring
Figure 4-1. Hookup for Monitoring the Line 4-3

Chapter 5: Triggers

Chapter 6: Level 2 and 3 Assisted Mode

Chapter 7: Simulating
Figure 7-1. Hookup for Simulating 7-2

Chapter 8: The Run Menu

Chapter 9: The Examine Data Menu
Figure 9-1. Two Line Format 9-9
Figure 9-2. DTE Only 9-10
Figure 9-3. DCE Only 9-11
Figure 9-4. Data and State Format 9-11
Figure 9-5. Frame Only 9-12
Figure 9-6. Packet Format 9-12

www.valuetronics.com

Chapter 10. Bit Error Rate Tests (BERT)

Figure 10-1. Asynchronous Screen Selections 10-1
Figure 10-2. Synchronous Screen Selections 10-1
Figure 10-3. Isochronous Screen Selections 10-1
Figure 10-4. End-to-End Testing 10-1
Figure 10-5. Loopback Testing 10-1

Chapter 11: The Remote Menu

Figure 11-1. Data Transfer 11-
Figure 11-2. Controller Setup Menu 11-

Chapter 12: Mass Storage

Figure 12-1. Inserting the Disc 12-1
Figure 12-2. Write Protecting Your Disc 12-1
Figure 12-3. Utility Disc Main Level Display 12-2
Figure 12-4. Copy Disc Utility Keys 12-2

Chapter 13: ASCII Printer Output

Figure 13-1. Connecting the Printer 13-
Figure 13-2. Printed Output in Data & State Format 13-
Figure 13-3. Printed Output in 2 Line Format 13-

Chapter 14: Async Terminal Emulator

Chapter 15: Interface Pods

Figure 15-1. Interface Pod Connection 15-
Figure 15-2. The HP 18179A Interface 15-
Figure 15-3. The HP 18180A Interface 15-
Figure 15-4. The HP 18174A Interface 15-1
Figure 15-5. The HP 18177A Interface 15-1
Figure 15-6. The HP 18160A Interface 15-1
Figure 15-7. RS-232C/V.24 Pod Configuration - Monitor Mode 15-1
Figure 15-8. RS-232C/V.24 Pod Configuration - Simulating a DTE 15-1
Figure 15-9. RS-232C/V.24 Pod Configuration - Simulating a DCE 15-1
Figure 15-10. V.35 Pod Configuration - Monitor Mode 15-1
Figure 15-11. V.35 Pod Configuration - Simulating a DCE 15-1

www.valuetronics.com

Chapter 16: Examples

Appendix A: Error Messages

Appendix B: Specifications and Accessories

Appendix C: OSI Level 2 and 3 Tables

Appendix D: Service Information

Figure D-1. Char Set 1 Test Pattern D-8
Figure D-2. Char Set 2 Test Pattern D-9

Appendix E: External Video Output

Appendix F: JIS Option

www.valuetronics.com

Manufacturer's Declaration

The following certification (shown in German, followed by an English translation) applies only to products shipped into Germany after June 1, 1985.

Herstellerbescheinigung

Hiermit wird bescheinigt, daß das Gerät/System

HP 4952A Protocol Analyzer

in Übereinstimmung mit den Bestimmungen der Postverfügung 1046/84 funkentstört ist.

Der Deutschen Bundespost wurde das Inverkehrbringen dieses Gerätes/Systems angezeigt und die Berechtigung zur Überprüfung der Serie auf Einhaltung der Bestimmungen eingeräumt.

Zusatzinformation für Meß- und Testgeräte

Werden Meß- und Testgeräte mit ungeschirmten Kabeln und/oder in offenen Meßaufbauten verwendet, so ist vom Betreiber sicherzustellen, daß die Funk-entstörbestimmungen unter Betriebsbedingungen an seiner Grundstücksgrenze eingehalten werden.

Manufacturer's Declaration

This is to certify that the equipment

HP 4952A Protocol Analyzer

is in accordance with the Radio Interference Requirements of Directive FTZ 1046/1984. The German Bundespost was notified that this equipment was put into circulation. The right to check this model type for compliance with these requirements was granted.

Additional Information for Test- and Measurement Equipment

Note If Test and Measurement Equipment is operated with unscreened cables and/or used for measurements on open set-ups, the user has to assure that under operating conditions the Radio Interference Limits are still met at the border of his premises.

www.valuetronics.com

Safety

Prior to operation of the equipment you must examine the instrument and review this document to ensure you are completely familiar with all the safety markings and the operating instructions.

Warnings

The following WARNINGs define operating procedures, practices, etc., which, if not correctly followed, could result in personal injury or loss of life.

Warning This product is a Safety Class 1 instrument with a protective earth terminal.

Warning For protection from electric shock hazard, power cord ground must not be defeated.

Safety

The following general safety precautions must be observed during all phase of operation, service, and repair of this instrument. Failure to comply with these precautions or with specific warnings in this manual violates safety standards of design, manufacture, and intended use of this instrument. Hewlett-Packard Company assumes no liability for the customer's failure to comply with these requirements.

www.valuetronics.com

Grounding

To minimize shock hazard, the instrument chassis and cabinet must be connected to an electrical ground. The instrument is equipped with a three-conductor AC power cable compatible with an approved three-contact electrical outlet. The power jack and mating plug of the power cord must meet International Electrotechnical Commission (IEC) safety standards.

Environment

Do not operate the instrument in the presence of flammable gases or fumes. Operation of any electrical instrument in such an environment constitutes a definite safety hazard.

Service and Adjustment

Dangerous voltages exist within this instrument. Service and adjustment of this instrument is to be performed only by trained service personnel Operating personnel are not authorized to remove the instrument covers or to perform any internal service or adjustment procedure.

Do not replace components with the power cable connected. Dangerous voltages may be present even when the power cable is disconnected.

Do not perform internal servicing or adjustment unless another person, capable of rendering first aid and resuscitation, is present.

CRT Handling

Rough handling or jarring of the instrument can break the CRT (cathode ray tube). The resulting implosion will scatter glass fragments at high velocity. Removal or installation of the CRT is to be performed only by qualified maintenance personnel using approved safety mask and gloves.

Unauthorized Service

The installation of substitute parts or the installation of any instrument modification not authorized by Hewlett-Packard is specifically forbidden. The performance of such unauthorized service can negate the instrument warranty or any maintenance agreements.

Return the instrument to a Hewlett-Packard Sales and Service Office for authorized service and repair.

www.valuetronics.com

Printing History

New editions are complete revisions of the manual. Update packages (formerly known as "Manual Changes") are issued between editions. They contain additional and replacement pages to be merged into the manual by the customer. The dates on the title page change only when a new edition or a new update is published. No information is incorporated into a reprinting unless it appears as a prior update. The edition does not change when an update is incorporated.

Many product updates and fixes do not require manual changes and, conversely, manual corrections may be done without accompanying product changes. Therefore, do not expect a one-to-one correlation between product updates and manual updates.

Edition 1	September 1988
Edition 2	August 1989
Edition 3	October 1989
Edition 4	November 1989

www.valuetronics.com

Syntax Conventions

The following symbols, abbreviations, and other conventions are used in this publication.

Symbol	Definition
Setup Menu	A softkey.
Reset	A keyboard command entry.
CTRL U	A control character entry from the keyboard where both the CTRL key and an alphanumeric key are pressed at the same time. To enter CONTROL U press CTRL and U.
Shift softkey	A keyboard entry where both the Shift and a softkey are pressed at the same time to select an auxiliary softkey function.
FILENAME	Within menus or screens, a parameter that must be entered in the exact format shown.
filename	Within menus or screens, a user-defined parameter.

Warning An operating procedure, practice, etc., which, if not correctly followed, could result in personal injury or loss of life.

Caution An operating procedure, practice, etc. which, if not strictly observed, could result in damage to, or destruction of, equipment or software.

Note Explanatory comments or supplementary instructions.

www.valuetronics.com

1

Introducing the HP 4952A

- Initial Inspection
- Using the Manuals
- Power Up and Power Down
- Major Features
- The Front Panel
- The Rear Panel
- The Pod
- The Top Level Menu
- Using the HP 4952A

www.valuetronics.com

Initial Inspection

Pay close attention when opening the shipping container. Make sure you have received the entire shipment with all appropriate options and manuals.

Inspect the shipping container for damage. If the container has any apparent damage, it should be kept until the contents have been checked mechanically and electrically.

If the contents are not complete or if there is mechanical damage or defects notify the nearest Hewlett-Packard service representative. Keep all shipping materials for the carrier's inspection. The Hewlett-Packard office will arrange for immediate repair or replacement without waiting for claim settlement.

Line Voltage Selection

There is no line voltage selection: the HP 4952A may be connected to any ac power source from 90 to 264 volts; and 48 to 66 Hz (See Appendix B).

Grounding Requirements

The HP 4952A is equipped with a three-conductor power cable that grounds the analyzer when connected to an appropriate power outlet. To preserve this protection, do not operate the analyzer while connected to a line power outlet with no ground protection.

Power Cord

An appropriate power cord is packaged with each analyzer depending upon its destination (see Appendix D). If your protocol analyzer has the wrong power cord for your area, contact your Hewlett-Packard Sales and Support Office.

Shipment

If your analyzer is being returned for service, contact the nearest Hewlett-Packard Field Repair Center or Sales and Support office for complete shipping instructions. Be sure to install the transportation disc before shipping.

Transportation Disc

Always transport the HP 4952A with the yellow plastic transportation disc installed.

www.valuetronics.com

Using the Manuals

The HP 4952A manual set consists of two manuals, the *Getting Started* guide and the *Operating Manual*.

Getting Started Guide

The *Getting Started* guide contains the basic information needed to begin using the HP 4952A. It lets you get comfortable with pushing the buttons and how the menu structure has been implemented.

The *Getting Started* guide contains:

- Descriptions of front and rear panel controls, pod, and Top Level Menu.
- Short step-by-step descriptions of all the instrument functions.
- Explanation of monitoring with an optional self-demonstration.
- Explanation of simulating with an optional self-demonstration.
- Exercise on how to view buffer data with different display formats.
- Exercise on how to load and store menus and data to disc.
- How to perform Bit Error Rate Tests.
- Examples of monitor and simulate programs stressing the fundamentals.

Operating Manual

The *Operating Manual* is the most complete and detailed reference material available. This manual contains all the information necessary to operate, program, understand, and follow the menu structure. Use this manual as a reference guide.

www.valuetronics.com

Power Up and Power Down

Turning the HP 4952A On

The HP 4952A may be connected to any AC power source from 90 to 264 volts; and 48 to 66 Hz. Connect the AC power cord to the HP 4952A power cord connector and then to the AC line connector.

Set the power switch on the rear panel to the (1) position. If your instrument displays the Top Level Menu, 4952 displayed in large, bold numbers, after power-on, you can be confident that the internal circuits are working properly.

Turning the HP 4952A Off

Caution To save current setups and data, be sure to press EXIT and go to the Top Level Menu before turning off the instrument. Otherwise, the analyzer may reset to default parameters when you turn it back on.

Set the power switch on the rear panel to the (0) position when the analyzer is in the Top Level Menu.

Connecting the Pod

Caution Make sure that instrument power is off when installing or removing the pod.

To install the pod, connect the interface pod cable to the interface pod connector on the rear panel. Tighten the connector screws so the cable will not pull off during operation. Connect the other end of the pod cable to the front of the interface pod.

www.valuetronics.com

Reset

To clear the buffer and to default setup parameters:

- Press **Reset** in the Top Level Menu, and then **Reset Menus**.
- Press **Reset** in the Top Level Menu and press **Reset Applic** to remove any application programs that are loaded into the HP 4952A.

Major Features

The HP 4952A is a rugged portable protocol analyzer and BERT tester. Some of the major features are:

Monitoring

The HP 4952A can recognize and monitor all major protocols and on all common interfaces at speeds up to 64 kbits/sec. Auto Configure can find the protocol, speed, data code, and parity of most datacommunication links. The HP 4952A will look for simultaneous triggering events, count the events or measure the time between them.

Simulating

You can substitute the instrument for a DTE or DCE. This allows you to exercise the datacommunication link and drive other devices on the line to isolate any malfunctions.

Remote Testing

The HP 4952A is capable of remote operation as either a controlling device or as a slave. The unattended operation enables you to monitor or simulate without being at the remote site.

Asynchronous Terminal Emulation

Terminal emulation allows you the flexibility of an extra device and eliminates the need to carry both the analyzer and a terminal in the field.

Microfloppy Disc Drive

The disc drive lets you store large amounts of data and setups on a 3 1/2 inch disc.

www.valuetronics.com

Bit Error Rate Testing (BERT)

BERT evaluates the integrity of the entire datacomm link.

Printer and Video Output

You can connect a printer for hard copy of data and menus. You can connect a video monitor for a larger display.

The Front Panel

The front panel and keyboard section makes the HP 4952A an easy-to-use protocol analyzer

Display

The five inch screen displays 16 lines of 32 characters. Softkey labels occupy the bottom two lines and correspond to the six unlabelled hardkeys on the keyboard.

Disc Drive

The floppy disc drive is located on the front for direct access and convenience.

Keyboard

The keyboard is designed similar to a conventional typewriter keyboard. The SHIFT keys are used for capitalization, the CNTL key allows you to enter control characters directly from the keyboard.

Beside the softkeys are the MORE and EXIT (HALT) keys. These keys are used for moving around in the operating system menu structure. When MORE is displayed in the lower right corner of the screen, press MORE for an extended selection of softkeys. Press EXIT to back up a level in the menu structure.

In the top right corner of the keyboard are the arrow keys. Use these keys to place the cursor in the data string or for making selections on the screen.

www.valuetronics.com

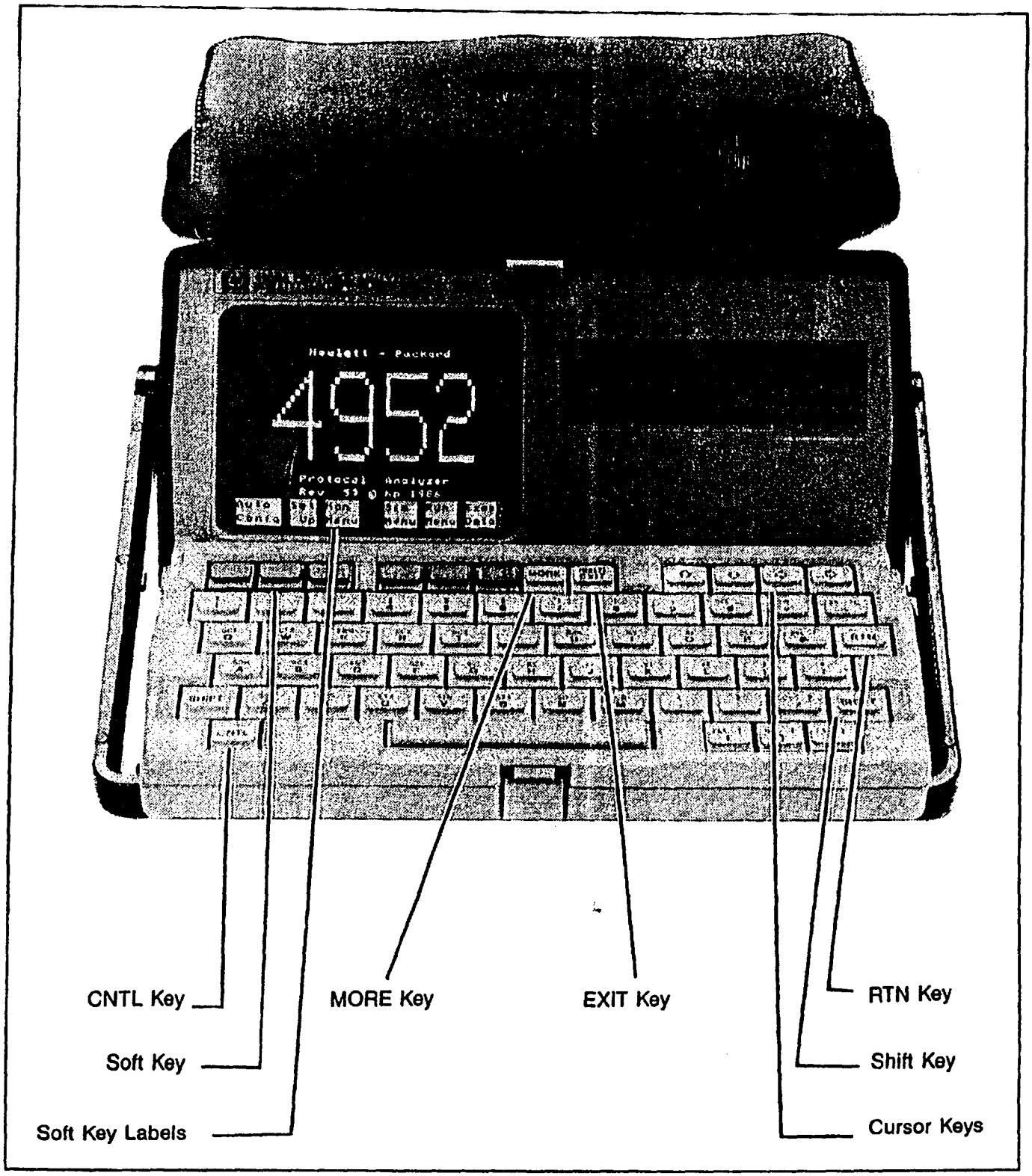

Figure 1-1. The Front Panel

www.valuetronics.com

The Rear Panel

Line Switch	Press the side of the line switch labelled '1' to turn the instrument on. Press the side labelled '0' to turn the instrument off. You can connect the instrument to any ac line voltage from 90 to 264 volts; and 48 to 66 Hz.
Remote/Printer	Use this connector to hook up a remote analyzer or an ASCII printer. The HP 4952A acts physically as a DTE through this port.
Interface Pod	Use this connector to hook up the interface pod.
Ext Video	Use this connector to hook up an external video monitor. The video output follows RS-170 conventions.
Fuse Holder	Remove the power cord before replacing the fuse. Open the line switch module from the top with a small screwdriver to replace the fuse.
Fan	The fan provides cooling for the instrument. Operation is thermostatically controlled by the temperature of the instrument so it does not need to run all of the time. The fan may not run right away upon power up. Make sure nothing obstructs the fan area.

www.valuetronics.com

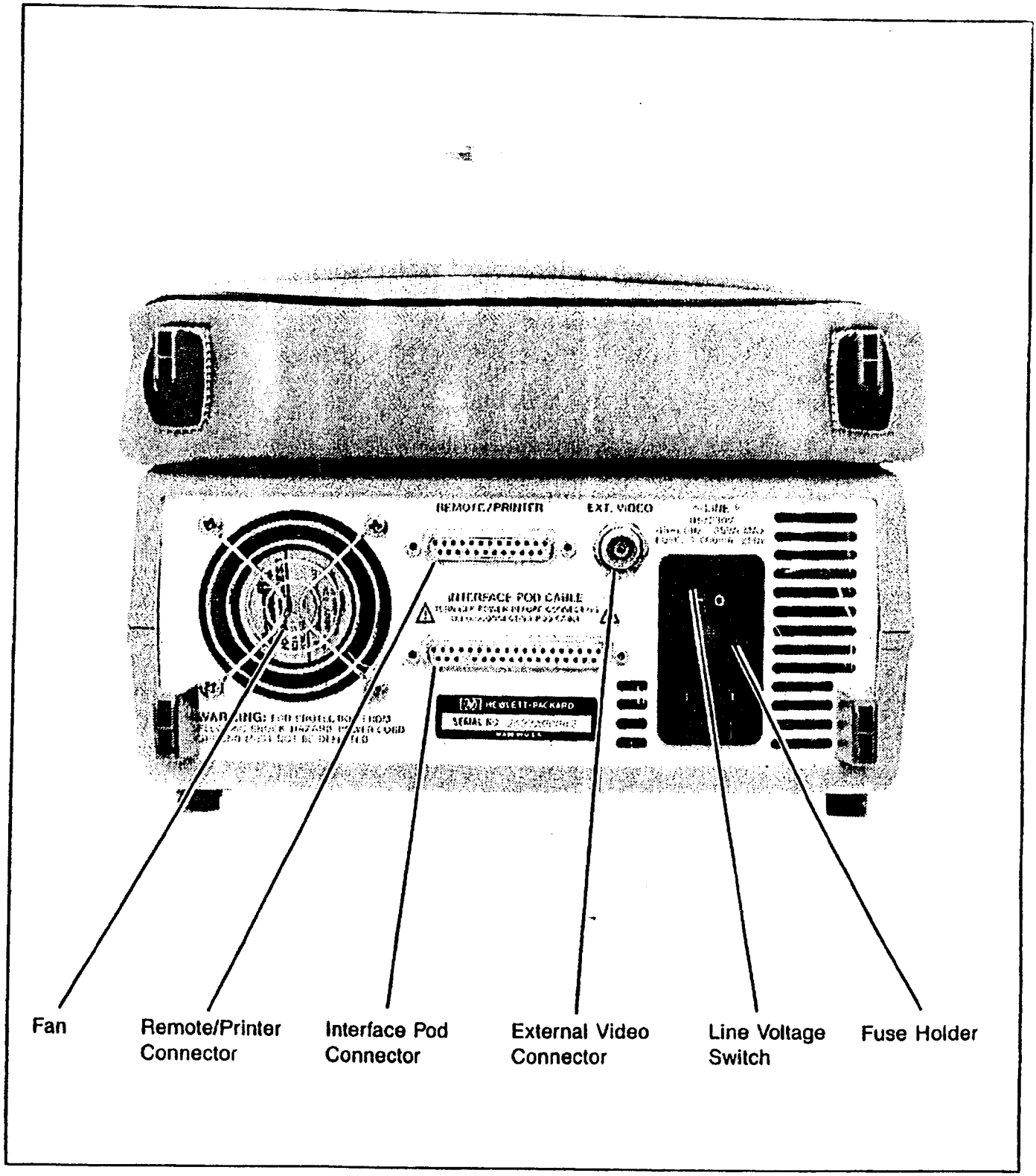

Figure 1-2. The Rear Panel

www.valuetronics.com

The Pod

The HP 4952A can be used with several different interfaces, each requiring a different pod. The HP 18179A interface pod, which is used on RS-232C/V.24 interfaces is illustrated here.

LEDs	The LEDs on the left side of the pod show 3-state activity on the interface pins. The high impedance state is indicated when both the green and the red LED are off.
Disconnect Switches	Pins 2, 3, 4, 5, 6, 8, 15, 20, and 24 can be individually disconnected from the data link by switches. This allows you to isolate non-driven lines that cause cross-talk and noise.
RS-232C/V.24 Connectors	These connectors are for connecting the pod to the line. To include the breakout box portion of the pod in series, connect the Y-cable to the top connector. To by-pass the breakout box, connect the Y-cable to the bottom connector.
Breakout Box	Setting these switches provides cross-patching, line forcing, and monitoring capabilities for all RS-232C/V.24 lines. Use the miniature switches to isolate lines and the jumper pins for patching.
Mark/Space Indicator	Jumper any pin to this indicator to find the logical state.
+/-12 V Source Pins	Supply +12 and -12 volts. You may set any signal line on or off by jumpering that line to the source pins.
Instrument Connector	This connects the pod to the HP 4952A via the interface pod cable.
Instrument Cable	Use this cable to connect the instrument to the pod.
Y-Cable	Use this cable to connect the instrument to the line in various configurations for monitoring or simulating.

www.valuetronics.com

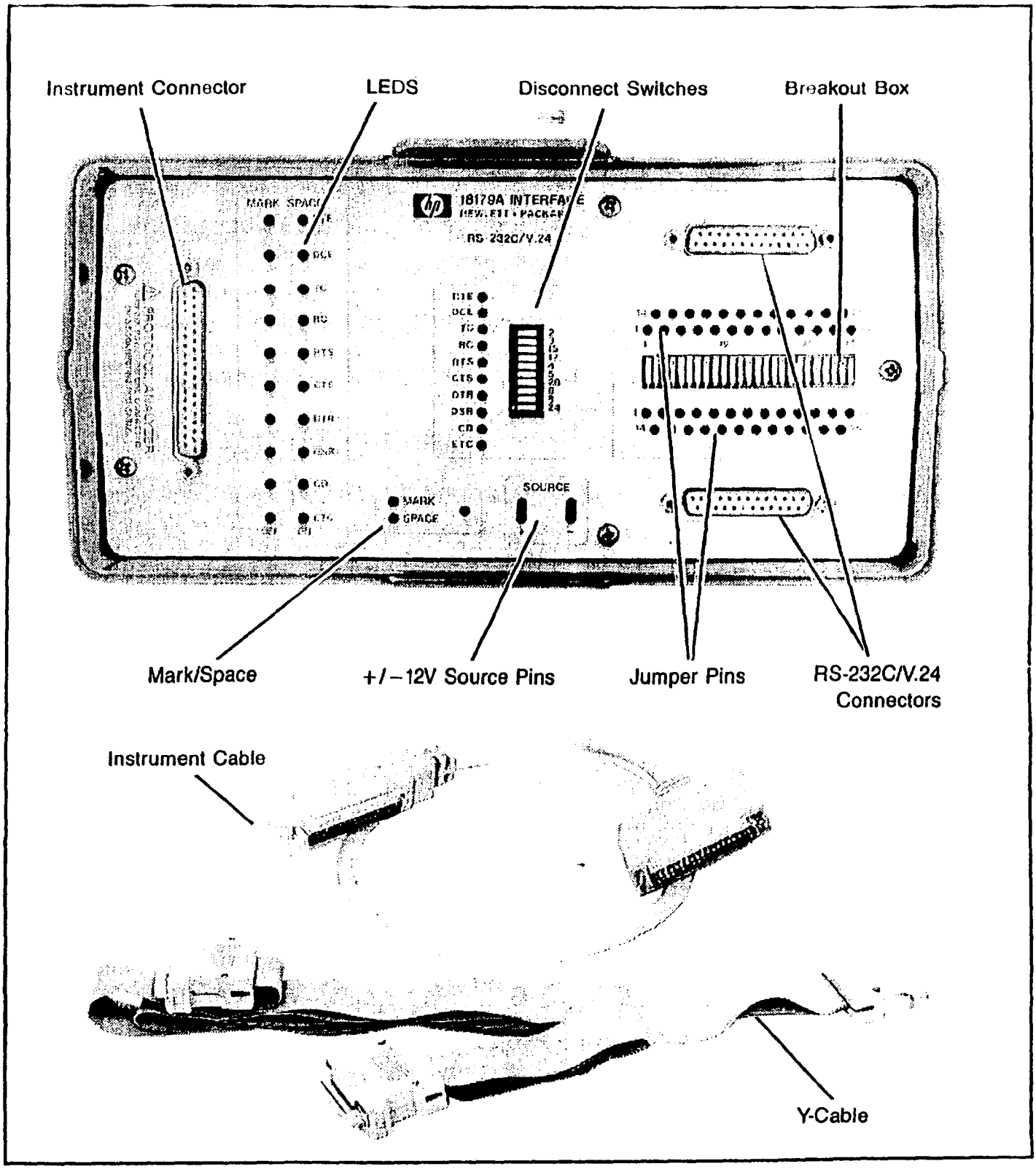

Figure 1-3. The HP 18179 Interface Pod

www.valuetronics.com

The Top Level Menu

From the Top Level Menu you can access all instrument functions. Press EXIT once or twice to get the Top Level Menu. Press MORE to see all the top level softkeys. The menus accessed by softkeys from the Top Level Menu are:

Auto Confg	Press this softkey to automatically configure the HP 4952A to line parameters.
Set Up	Use this menu to manually configure to line parameters.
Mon Menu	Use this menu to write programs for monitoring.
Sim Menu	Use this menu to write programs for simulating.
Run Menu	Use this menu to execute all tests for monitoring, simulating, or BERT. It also allows access to the data filter setup menu.
Exam Data	Look at data in the buffer in this menu.
Re-set	Reset all menus to their default conditions, clear buffer, or remove applications from memory in this menu.
BERT Menu	Configure the analyzer for bit error rate tests and display results in this menu.
Remote&Print	Use this menu to configure the analyzer for remote testing and for printing to an ASCII printer.
Mass Store	Use this menu to load and store menus and data to or from disc.
Self Test	Perform self-test procedures in this menu and verify proper operation of the HP 4952A and interface pod..

www.valuetronics.com

Using the HP 4952A

The HP 4952A Protocol Analyzer has been designed for ease-of-use with separate and distinct menus. The menus are separate and functionally independent of each other, however, selections in one menu dictate selections available in another. Because of the diverse capabilities and the interrelationships between menus, an overview of using the instrument is necessary.

There are some very basic things that need done regardless of what your intended use of the instrument is. They are:

1. Hook up the instrument to the necessary pod (unless monitoring the buffer).
2. Hook up the instrument for your desired use, e.g., monitor the line, monitor the buffer, simulate, BERT, etc.
3. Set up the HP 4952A to match the parameters of the line.
4. Access the menu you intend to use. Write a monitor or simulate program or load a program or data from memory.
5. Enter the Run menu and execute the program or activity.
6. Use the Examine Data menu to evaluate the captured data.

Instrument Hookup

Connect the appropriate Y-cable in a configuration compatible with the needs of your desired use (see the appropriate chapter for hookup details).

Pod Hookup

Connect the pod to the instrument using the cable supplied with the HP 4952A. The pod is not necessary if you already have the data in memory and you intend to monitor the buffer.

www.valuetronics.com

Setup

Use the Setup menu or Auto Configure menu to match the parameters of the line being tested (see Chapters 2 or 3).

Execute

Select the menu necessary to run the appropriate test or program. This may be the Monitor, Simulate, BERT, Remote, etc. You need to load a program, write a program, or run from the line.

Evaluate

Enter the Examine Data menu and evaluate the data that was previously captured.

www.valuetronics.com

2

Auto Configure

- Introduction
- Auto Configure As a Starting Point
- Auto Configure Results
- Bit Oriented Protocols (BOPs)
- Character Oriented Protocols (COPs)
- Auto Configure Messages

www.valuetronics.com

Introduction

Auto Configure automatically configures the HP 4952A to a line. The protocol analyzer will evaluate the data stream on the line, make the setup based on the parameters it finds and place the instrument in the monitor mode.

The Auto Configure softkey is conveniently located in the Top Level Menu, next to the **Setup** softkey. You can easily make the setups required to monitor and capture data using Auto Configure. If the line parameters need to be changed or if you need to make any changes to the current setup you must use the Setup Menu.

Using Auto Configure

Connect the analyzer to the line for monitoring (See Chapter 4). Press the **Auto Confg** softkey on the Top Level Menu.

Pressing **Auto Confg** causes the HP 4952A to evaluate the line parameters, identify the presence and speed of clocks, look for common sync characters, identify parity and character length, and put these measurement results into the setup menu.

Note A blinking asterisk is displayed whenever Auto Configure is working. This indicates that the instrument is still checking line data.

If a good parameter match is found, the HP 4952A briefly shows the setup menu with the new parameters, goes to the monitor mode, and begins displaying data. If a good match is not found the previous setups are restored.

You may at any time press the **Summary** softkey to review the set-up results. To change the display format, or any other setup parameter, halt the run by pressing EXIT, and then go to the Setup Menu and modify the setup. Go back to the run menu and resume execution.

Note When monitoring begins, Auto Configure alters the setup menu and the buffer data. If you need the present setup and buffer data save them on disc.

---

www.valuetronics.com

Auto Configure Results

The HP 4952A Auto Configure function can have several results. It will evaluate data streams and correctly determine COPs such as BSC, BOPs such as SDLC (NRZ or NRZI), HDLC (X.25) and then determines appropriate data codes, ASCII, EBCDIC, Baudot.

Note Auto Configure cannot find IPARS or any inverted data case.

Data rates can be determined from 50 bps to 38.4 kbps for asynchronous and 1200 bps to 64 kbps synchronous.

Auto Configure Algorithm

The HP 4952A goes through a thorough examination of the data stream when **Auto Confg** is pressed. It is important for you to understand the process so you will understand the messages that may appear (see Figure 2-1).

Note The Auto Configure algorithm first looks for clock activity on the line. Crosstalk on the clock lines may result in the instrument thinking it has found a false clock.

The analyzer first looks for a clock to determine sync or async data. When a clock is present on the line:

1. The HP 4952A first determines the data rate.
2. The analyzer will then look for idle types. When the data idles in NRZI 7E the analyzer automatically sets up in SDLC EBCDIC.
3. When the data idles in non-NRZI 7E the analyer sets up for synchronous BOPs.
4. When the data idles in FF the analyzer sets the data code and parity and then checks for BSC. If the data is not BSC the instrument sets up for synchronous COPs.
5. When Auto Configure does not complete within 15 seconds, the HP 4952A will repeat the process and try to auto configure again.

www.valuetronics.com

When there is no clock on the line:

1. The analyzer again determines the data rate.

2. The analyzer looks at idles. If the idles are NRZI the setup is immediately set at SDLC EBCDIC.

3. If the data idles in FF the analyzer determines how many bits per character. The setup is made in ASYNC COPs depending on the bits/character.

4. When Auto Configure stops at any step for 45 seconds, it will begin the auto configure process again.

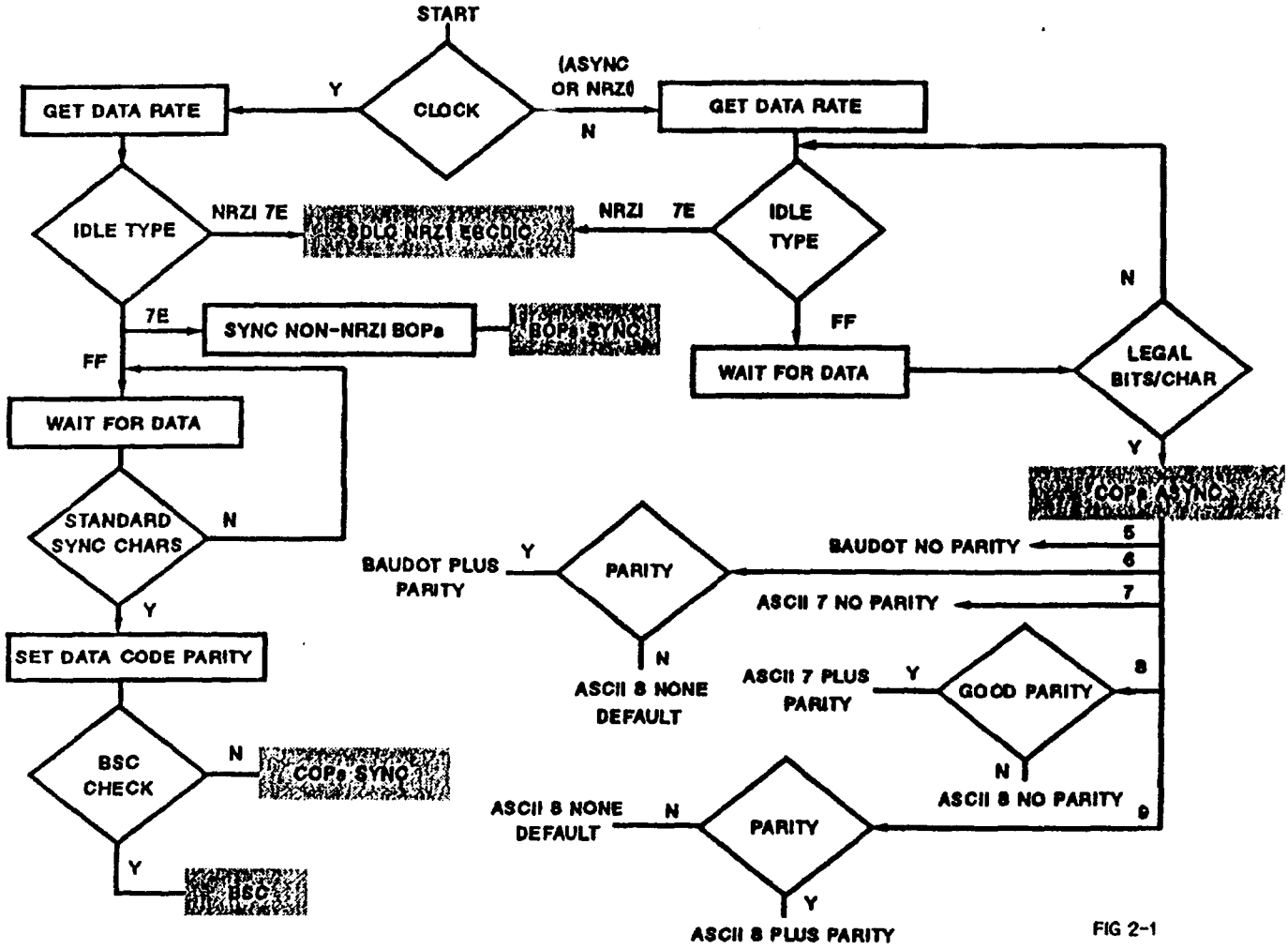

Figure 2-1. Auto Configure Algorithm

www.valuetronics.com

Auto Configure As a Starting Point

Auto Configure works with most protocols and data codes, however, it may not find all the parameters if the protocol is nonstandard, there is insufficient information, or the data present is not random.

Auto Configure provides a starting point for setup because it always finds some of the line parameters. The setup parameters that Auto Configure finds are displayed as they are found, but you must reenter these parameters into the Setup menu if Auto Configure completes only a partial setup.

Bit Oriented Protocols (BOPs)

Auto Configure will setup synchronous, NRZ, and NRZI BOPs. BOPs are assumed to idle the line in flags (7E).

BOPs will be setup as follows:

X.25	ASCII8, no parity
HDLC	ASCII8, no parity
SDLC	EBCDIC, no parity (including clocked NRZI)

All BOPs will default to frame display format.

Extended Address and Control In HDLC

To observe extended address and control on HDLC lines, go to the setup menu and change the protocol to HDLC. Turn on extended address and/or extended control, and change the display format to Frame.

www.valuetronics.com

Character Oriented Protocols (COPs)

Auto Configure always selects Char setup for character oriented protocols, unless it finds a match with BSC setup. The sync and control characters in COPs must be standard (i.e., ASCII sync = 16_{16} and EBCDIC sync = 32_{32}). COPs must idle the line in FF.

COPs will be setup as follows:

Synchronous

BSC	ASCII8, no parity, sync 16_{16}, error check LRC or CRC16
BSC	ASCII7, odd parity, sync 16_{16}, error check LRC or CRC16
BSC	EBCDIC, no parity, sync 32_{32}, error check LRC or CRC16
CHAR	EBCDIC, odd/even parity, sync 32_{32}
CHAR	EBCDIC, no parity, sync 32_{32}
CHAR	ASCII8, odd/even parity, sync 16_{16}
CHAR	ASCII8, no parity, sync 16_{16}
CHAR	ASCII7, odd/even parity, sync 16_{16} or 96_{96}
CHAR	ASCII7, no parity, sync 16_{16}

Asynchronous

CHAR	ASCII8, odd/even/no parity
CHAR	ASCII7, odd/even/no parity
CHAR	Baudot, odd/even/no parity

All COPs will default to 2 line display format.

Auto Configure Messages

Waiting For Data

Either there is no line data, or the analyzer is still collecting sufficient data to make a determination. Both data and idle conditions must be present.

Waiting For Idles

The analyzer is waiting for idles between data. Both data and idles must be present. Character oriented protocols must have a minimum of ten idle characters between messages, and bit oriented protocols must have ten flags between frames.

www.valuetronics.com

Waiting for Frames

The analyzer has detected a bit-oriented protocol and is trying capture frames.

Waiting for Messages

The analyzer has detected a character-oriented protocol and is trying to capture data.

No Pod Attached

The pod is not attached. Check the interface pod connections.

Invalid Sync Characters

Could not find any of the standard sync characters (ASCII = 16_{16}; EBCDIC = 32_{32}).

Invalid Asynchronous Speed / Invalid Synchronous Speed

The bit rate is not within 5% of a standard selection.

Invalid Async Framing

The analyzer cannot determine the async data code.

Can't Configure Within Time Limit

For synchronous protocols the time limit is 15 seconds; for asynchronous or NRZI protocols the time limit is 45 seconds. After the time limit, Auto Configure resets and starts over.

www.valuetronics.com

www.valuetronics.com

3

The Setup Menu

- Setup Introduction
- Bit-Oriented Protocols
- Character-Oriented Protocols
- Capturing Unknown Data

www.valuetronics.com

Setup Introduction

The Setup menu is the first step in using the HP 4952A. You must set several parameters so the instrument can understand and decode the data on the line. Before you can monitor a line, you must tell the HP 4952A what protocol, data code, data rate, and other parameters are being used. If you don't, the analyzer may have trouble decoding data or synchronizing to the line.

Setup Controls Other Menus

Setup, whether performed manually or Auto Configure, affects the settings in the other menus. For example, error checking is performed during monitoring according to the current setup. The appropriate error checking characters are automatically appended to Send strings. Data is displayed in the Examine Data or Run Menus according to the current setup.

Using the Setup Menu

Press **Setup** in the Top Level Menu to access the setup menu. Move the cursor to the protocol field and select the desired protocol. Those available are:

- HDLC
- SDLC
- X.25
- BSC
- Char
- X21 HDLC
- X21 SDLC
- X21 X.25
- X21 BSC
- X21 Char

You can manually change the setup at any time and from any menu by pressing EXIT, and then **Setup**. This puts you in the setup menu where you can reselect.

When you select a particular protocol, the menu fields change to let you make selections which are specific only to that protocol.

The setup menu may be used when Auto Configure cannot find all the parameters. You must also use the setup menu for simulating or monitoring the buffer.

www.valuetronics.com

When To Use the Setup Menu

Auto Configure automatically configures the HP 4952A to most lines. You may, of course, use the setup menu to manually configure. Generally, however, use the setup menu for:

- Monitoring. You cannot use Auto Configure to monitor the buffer.
- Simulating. Use the setup menu to determine 'send' string format.
- Changing display formats. Auto Configure always uses the display format currently selected in the setup menu. Use the setup menu to change display formats.
- Supplementing Auto Configure. Use the setup menu to modify any parameters after initial setup with Auto Configure.

Saving Setups

- NONVOLATILE MEMORY. Menus are always saved in the HP 4952's nonvolatile buffer memory if you turn off the instrument while in the Top Level Menu.
- DISC STORAGE. You can store menus, or both menus and data to disc

www.valuetronics.com

Bit Oriented Protocols

Bit-Oriented Setup Definitions

Code	The bit-oriented menus allow ASCII 8, EBCDIC or, using Hex 8, any 8-bit code.
Display	All six display formats are available for the bit oriented menus. Frame format decodes all control field bits. Packet format decodes packet information.
Bits/Sec	Except for NRZI, all the selections are supported. NRZI will not work at 16000, 12000, 2000, or 50 bps.
Error Check	CRC-CCITT preset 1 or preset 0.
Mode	All bit-oriented protocols are synchronous: the data is transmitted with a clock. In NRZI, (HDLC and SDLC) the clock is encoded within the data. When NRZI mode is selected, the HP 4952A will derive its receive clocks from the data on each channel. When external NRZI is selected, the HP 4952A will use the clock signals on RC and ETC.
DTE Clock	DTE data can be synchronized to either a DCE or DTE clock. If this selection is incorrect, only DCE data will be displayed.
Ext Addr (HDLC)	HDLC allows an extended address field. When an additional address octet (byte) is to follow, the first or least significant bit of the address octet is set to 0. The last address octet in a series has the LSB set to 1. Use Frame display format to see the extended address.
Ext Ctrl (HDLC)	HDLC allows a 16-bit control field to handle larger N(S) and N(R) counts. Use Frame display format to see the extended control field.

www.valuetronics.com

Bit Oriented Protocol (BOP) Setup

To select bit oriented setup protocols, press **Setup** in the Top Level Menu and then the protocol of choice:

- HDLC
- SDLC
- X.25
- X21 HDLC
- X21 SDLC
- X21 X.25

Note Do not select the X.21 protocols unless the HP 18260A Interface pod is connected.

In bit-oriented setups, the HP 4952A performs automatic zero bit insertion/extraction.

www.valuetronics.com

Some typical BOP setups are shown below:

HDLC Setup

Protocol	HDLC	Disp mode	Frame
Code	ASCII8		
Bits/sec	64K	Err chk	CCITT
Parity	None		
		DTE clock	DCE
Mode	Sync	Bit sense	Norm
		Ext Addr	Off
		Ext Ctrl	Off

SDLC Setup

Protocol	SDLC	Disp mode	Frame
Code	EBCDIC		
Bits/sec	64K	Err chk	CCITT
Parity	None	DTE clock	DCE
Mode	Sync	Bit sense	Norm

X.25 Setup

Protocol	X.25	Disp mode	Packt
Code	ASCII 8		
Bits/sec	64K	Err chk	CCITT
Parity	None		
		DTE clock	DCE
Mode	Sync (not selectable)	Bit sense	Norm

www.valuetronics.com

BOP Menu Selections

* used only in HDLC
** used only in HDLC and SDLC
*** 56 baud when simulating non-NRZI, non-asynchronous if the HP 4952A is generating a clock

```
Protocol        [ HDLC ]                Display         [ 2Line       ]
                [ SDLC ]                                [ DTE Only    ]
                [ X.25 ]                                [ DCE Only    ]
                [ X21 HDLC ]                            [ Data & State]
                [ X21 SDLC ]                            [ Frame       ]
                [ X21 X.25 ]                            [ Packet      ]

Code            [ ASCII 8 ]
                [ Hex 8   ]
                [ EBCDIC  ]
                                        Err chk         [ CRC CCITT   ]
                                                        [ CCITT Set 0 ]

Bits/sec        [ 19200 ] [  2400 ] [   200 ] [   64K ] [   16K ]
                [  9600 ] [  2000 ] [   150 ] [   56K ] [ 14.4K ]
                [  7200 ] [  1800 ] [ 134.5 ] [   48K ] [   12K ]
                [  4800 ] [  1200 ] [   110 ] [ 38.4K ]
                [  3600 ] [   600 ] [    75 ]
                [  3200 ] [   300 ] [    50 ] ***

Parity          None
                                        DTE clock       [ DCE ]
                                                        [ DTE ]

Mode            [ Sync      ]           Bit sense       [ Norm ]
                [ Sync NRZI ]**                         [ Inverted ]
                [ Ext NRZI  ]**
                                        Ext Addr *      [ Off ]
                                                        [ On ]

                                        Ext Ctrl *      [ Off ]
                                                        [ On ]
```


www.valuetronics.com

Configure To Bit Oriented Lines

When monitoring a BOP line, The line indicators should be flashing with clock activity except in the case of monitoring an NRZI line, (when simulating NRZI, a clock is put on the interface).

Use Auto Configure

Use Auto Configure for initial setup. You will have to change setups in the following cases.

- HDLC with Extended Address or Control. Change the protocol to HDLC with the following setup:

  `Ext Addr` and/or `Ext Ctrl: On  Display: Frame`

- X.25 Packets if the address is not 0_10_3. If the protocol is X.25, change the setup to the following. After capturing data, use the Examine Data Menu to observe packet decoding.

  `Protocol: X.25  Display: Packt`

Select a Display Format

In the bit-oriented menus, you can use any of the six display formats. For frame (level 2) decoding, use the Frame display. For packet (level 3) decoding, use the Packet display.

www.valuetronics.com

BSC Setup Definitions

Parity	The HP 4952A automatically sets correct parity for the chosen code: odd parity for ASCII 7, none for EBCDIC and Transcode. In simulate mode, BSC is sent with the correct parity. However, if "send" characters are specified in hex or binary, the parity is allowed to be different from the setup selection.
Mode	BSC is synchronous, half-duplex only. The CHAR protocol should be used for full-duplex BSC.
Sync on	The HP 4952A automatically chooses the correct sync characters for each data code. The sync characters are: 32_{32} (EBCDIC), 16_{16} (ASCII), or $3A_{3A}$ (Transcode). The HP 4952A requires at least two sync characters for proper framing.
Err Chk	Select LRC or CRC-16 for ASCII or EBCDIC, and select LRC or CRC-12 for Transcode.
Bits/sec	The bit rates for BSC are from 50 bps to 64 kbps.
Disp Mode	Frame and Packt display formats are not available in BSC.
Suppress	The BSC Menu lets you suppress almost any combination of text and control characters from the display. However, suppressed characters are not deleted from the buffer.

www.valuetronics.com

BSC Setup Selections

```
Protocol        [ BSC ]

Code            [ ASCII 7  ]          Disp mode     [ 2Line    ]
                [ Transcode ]                       [ DTE Only  ]
                [ EBCDIC   ]                        [ DCE Only  ]
                [ ASCII 8  ]                        [ Data & State ]
Bits/sec [ same as bit oriented protocols ]

Parity          Odd  (ASCII 7)        Err chk       [ LRC   ]
                None (Transcode)                    [ CRC 12 ]
                None (EBCDIC, ASCII 8)              [ CRC 16 ]

Mode            Sync                  DTE clock     [ DCE ]
                                                    [ DTE ]

Sync on         16   16  (ASCII 7)
                3A   3A  (Transcode)
                32   32  (EBCDIC)

                                      Suppress [ None       ] [Idle & Ctl    ]
                                               [ Idle       ] [Idle & Txt    ]
                                               [ Null       ] [Null & Ctl    ]
                                               [ Control    ] [Null & Txt    ]
                                               [ Text       ] [Id & Nu & Ctl ]

                                               [ Idles & Null ] [Id & Nu & Txt ]
```

BSC Setup

Press **Setup** in the Top Level Menu, and then **BSC** .

```
Protocol        BSC          Disp mode     2 Line
Code            ASCII 7
Bits/sec        64K          Err chk       LRC
Parity          Odd
                             DTE clock     DCE
Mode            Sync         Suppress      None
Sync on         1616         Bit Sense     Norm
```


www.valuetronics.com

Character-Oriented Protocols (COPs)

The Char menu is a general purpose setup menu, which can be used to capture most protocols, synchronous or asynchronous. There is a large number of codes available with this menu. You can select all the parameters to go with your data code. Of course, you can also create setups which make no sense: e.g., an 8-bit data code with a CRC-12 error check or synchronous baudot.

Note

The HP 4952A does not perform zero bit insertion or extraction for bit oriented protocols when in Char setup.

When To Use the Char Menu

For any character oriented protocol, synchronous or asynchronous, full-duplex or half-duplex. You will be able to see all line activity, including line idles, for nonstandard protocols, such as asynchronous BSC and full-duplex BSC.

www.valuetronics.com

Char Setup Definitions

Bit Order/Sense	In most protocols the least significant bit (LSB) is sent first, and data is not inverted. However, some protocols (e.g., IPARS) may be different, so the char menu provides bit order and bit sense selections. Hex setup menu entries are always entered in normal bit order and sense. For example, the standard IPARS, inverted, MSB first syncs would be entered as 3_F3_E even though they are 0_D2_D.
Start on/Stop on	Error checking starts on the character immediately after the 'start on' character, but includes the 'stop on' character. The fourth 'stop on' character is an intermediate text character (ITB). The first three 'stop on' characters normally cause sync to be dropped but the ITB character causes the channel to remain in sync. For IPARS and other 6-bit codes, setting the most significant bit in a 'stop on'character to 1 (e,g., changing 0_D to 8_D) will cause characters which were ITBs not to be ITBs, and vise versa.
Transparent Text	This character delimits the boundaries of a field in which all control characters are to be treated as data. This is the same as the DLE character in BSC protocol.
Mode	Select synchronous, monosynchronous, or asynchronous (1, 1.5, 2 stop bits). The HP 4952A needs only one stop bit for asynchronous monitoring, even if more are present.
Sync on	Selects the sync characters for proper framing. The HP 4952A requires at least two sync characters (or one for monosync setup) to capture data when monitoring or simulating character oriented protocols. In monosync, it is very important that the sync pattern not be found in the data stream.
Drop sync after	Tells the analyzer to "drop" sync (stop bringing in data) and start looking for sync characters again.
DTE Clock	Specifies the DTE clock source. It can be DTE or DCE.

www.valuetronics.com

Char Setup Selections

Protocol [Char]

Code
[ASCII 8] [Transcode]
[Hex 8] [Hex 5]
[ASCII 7] [IPARS Idle 0]
[Hex 7] [IPARS Idle 1]
[Hex 6] [Baudot]
[EBCDIC] [EBCD]

Bits/sec [same as bit oriented protocols] **

Parity
[None]
[Even]
[Odd]
[Ignore]

Transparent text char
[None] * DTE clock
[type a hex or text char]

Mode
[Sync]
[Asyn 1]
[Asyn 1.5]
[Asyn 2]
[Monosync]

Suppress
[None] [Idle & Ctl]
[Idle] [Idle & Txt]
[Null] [Null & Ctl]
[Control] [Null & Txt]
[Text] [Id & Nu & Ctl]
[Idles & Null] [Id & Nu & Txt]

* Sync on
[type in hex char]
[Idles]

* Drop sync after
[type in number] chrs
[type in hex chrs]

Disp mode
[2 Line]
[DTE Only]
[DCE Only]
[Data & State]

Err chk
[None]
[LRC]
[CRC 6]
[CRC 12]
[CRC 16]

Start On [type hex/text]
Stop On [hex/text]

Ignore [type hex/text]

[DCE]
[DTE]

Bit sense
[Normal]
[Inverted]

Bit order
[LSB first]
[MSB first]

* synchronous or monosynchronous mode only

** ASYNC does not support 16K, 48K. 56K 64K are available on the Utility disc.

www.valuetronics.com

Char Setup

Press **Setup** in the Top Level Menu, and then **Char** .

Protocol	Char	Disp mode	2Line
Code	ASCII 7		
Bits/sec	64K	Err chk	LRC
Parity	Odd	Start on	$S_H S_X$
Transparent		Stop on	$E_B E_X E_B U_S$
text char	D_L		
		DTE clock	DCE
Mode	Sync	Suppress	None
Sync on	16_{16}	Bit Sense	Norm
Drop sync	10 chrs	Bit Order	LSB
after	$FF_{16}FF_{16}FF_{16}FF_{16}FF_{16}$		

The instrument defaults to Char Synchronous. To place HP 4952A in the asynchronous mode you must move the cursor to the Mode field (using arrow keys). See **Char Setup Selections** for more details.

Hexadecimal Entry and Parity

There are several fields in the Char Menu which let you make hex entries: sync on, drop sync, transparent text, and start on/stop on. When you make a hexadecimal entry in one of these fields, the resulting parity bit is determined by hexadecimal entry, not the parity setup selection.

For example, when even parity is used with ASCII 7, the sync characters should be 96_{16}, rather than 16_{16}. Of course, your line may still use 16_{16}, even though this would result in a parity for sync characters that is different from other characters.

www.valuetronics.com

Rules For Hexadecimal Entry and Parity

For hexadecimal entries, the resulting parity bit conforms to the following rules:

- For data codes of 7 bits or less (e.g., ASCII 7, Baudot) the parity bit is not automatically changed to conform with the parity setup selection.
- For 8-bit data codes (e.g., ASCII 8, EBCDIC) the parity bit always conforms to parity setup selection.
- For 8-bit data codes with parity, the selected sync characters must be the same as the last 16 bits to enter the analyzer before non-sync data. For example, in EBCDIC the normal sync pattern is 32_{32}. With even parity, the binary pattern would be 100110010 100110010, or 18 bits. Only the last 16 bits are used as the sync pattern. Because least significant bits are sent first, the two bits in brackets are excluded from the sync pattern; 1001100[10] 100110010. Thus, you must enter 4_C 9_9 for the analyzer to accept data. Of course, Auto Configure will find the correct sync characters if the line idles in F_F.

Sync Characters

The Sync on selection determines what sync characters the analyzer looks for. Unless the sync pattern is correct, the HP 4952A will not capture data. The HP 4952A requires at least two sync characters (or one sync character in monosync setup) to capture data when monitoring and simulating.

When you do not know the sync characters, use Auto Configure. You can also select Sync on Idles. This allows you to load line data even without the correct sync characters.

Note The HP 4952A assumes that all character oriented protocols idle in F_F. If your line uses some other condition, you must "sync on" that condition.

---

www.valuetronics.com

Drop Sync Characters (Synchronous mode only)

The Drop sync entry determines where the analyzer drops sync and begins looking again for the sync characters. If the analyzer did not drop sync, it would bring in all activity on the line, including idles, such as when Drop sync on NONE is selected..

Select seven characters on which to drop sync. The first character is the "within text" character. The analyzer only looks for this character if you have chosen "error checking". Thus, if you Start on STX and Stop on ETX, the analyzer looks for the "within text" character between STX and ETX.

To store all data, including idles, enter Drop sync 0 chrs after None. Then the analyzer never drops sync, and brings in all line data, including idles.

Drop Sync and Error Checking

The Drop sync selection interacts with the Error check selection in the following ways.

- The first Drop sync character specifies "within text". The analyzer looks for this character between the Start on and Stop on error checking limits. When error checking is "none", all text is outside, and the analyzer does not look for the first character.

- The first, or "within text", character takes precedence over the six "outside text" characters. If the same character occurs both inside and outside the start on and stop on limits, the analyzer drops sync outside text.

- With error checking, the analyzer always drops sync after the BCC character(s) if it cannot find a "within text" character. For example, if you select CRC-16 error checking, with Start on STX and Stop on ETX, the analyzer drops sync after the two characters following ETX.

For example, Drop sync 1 chrs after B_8 F_F F_F F_F 5_D A_4 B_3 causes the analyzer to drop sync one character after the first B_8 character within the specified error checking limits. If the analyzer does not find the specified "within text" character, it drops sync either one character after the BCC character(s) or one character after one of the six "outside text" characters, whichever appears first. A Drop sync 0 after B_8 F_F F_F F_F 5_D A_4 B_3 causes the analyzer to drop sync immediately after the first B_8 character within the specified error checking limits or 0 characters after one of the other characters.

www.valuetronics.com

Capturing Unknown Data

For nonstandard protocols in which Auto Configure may not work, do the following:

1. Try an 8-bit code first, no parity and no error checking.

2. To monitor line data for study when you do not know the sync character, select `Sync on idles (FF).`

Note The HP 4952A assumes that all character oriented protocols idle in FF. If your line uses some other idle character, you must sync on that character.

---

3. To store all data for study, including idles, enter `Drop sync 0 chrs after None.` The analyzer never drops sync and brings in all data, including idles.

Note Normally idles are not stored to make efficient use of the buffer.

---

4. After making the above selections in the Char Menu, go to the Run Menu and select **Monitor Line** for a few moments to fill the buffer with data for study.

5. Go to the Examine Data Menu to view the data in buffer.

The buffer data will probably be meaningless because of incorrect character framing since the analyzer does not know where each character begins or ends. Now you need to find the correct sync pattern.

Finding the Correct Framing

Bit Shifting (BSC and Char only)

Even if you do succeed in bringing in data by synchronizing on idles, the displayed information will probably be meaningless because of incorrect framing. To make the data meaningful, go to the Examine Data Menu and select **Bit Shift** to capture the data.

www.valuetronics.com

Note

Bit shifting does not work when data is brought in Most Significant Bit (MSB) first or if any suppress functions are selected.

The HP 4952A does not shift through the parity bit. Unless you use a code with no parity, you must use trial and error to find the correct framing.

If part of the data still does not become meaningful while bit shifting, change the data code to one without parity. When the data becomes meaningful, you can determine the correct sync characters. Change the Sync on selection to these characters.

Eliminating Superfluous Data

When you have found the correct framing you can eliminate idles so the buffer will not fill with idles. To eliminate idles in 8 or 9-bit data codes, enter Drop sync 0 chars after FFFFFFFFFFFFFF. To eliminate idles in codes with frame sizes less than 8 bits, you must enter the correct number of 1's in any drop sync byte after the first byte (e.g., 7_F for a 7-bit code, or 3_F for a 6-bit code). In other words, you must enter the correct character and frame size for the idle character (see Table 4-1).

Table 4-1. Character Frame Sizes vs Data Code

Data Code	No Parity	Even or Odd Parity	Ignore Parity
Hex 5 Baudot	5 bits (no parity bit)	6 bits (including parity bit)	6 bits * (parity bit = 0)
Hex 6 EBCD IPARS Transcode	6 bits (no parity bit)	7 bits (including parity bit)	7 bits * (parity bit = 0)
Hex 7 ASCII 7	7 bits (no parity bit)	8 bits (including parity bit)	8 bits * (parity bit = 0)
Hex 8 ASCII 8 EBCDIC	8 bits (no parity bit)	9 bits (including parity bit)	9 bits * (parity bit = odd)
		(* these settings are forced in Simulate)	

www.valuetronics.com

Unusual Protocol Settings

This is the build-your-own menu for Character oriented protocols. Select **Char** in the Setup menu. Use this table as reference for your given in the left column below, enter the settings given to the right of the protocol.

Table 4-2. Unusual Protocol Settings

Protocol	Code	Parity	Err Chk	Sync Char	Transparent Text Char	Mode
Burroughs BASIC	ASCII 7	odd	VRC	16_{16}	d_l	Sync, Async 1
Burroughs Poll-Sel	ASCII 7	odd, SYNC even,ASYNC	LRC	16_{16}	None	Sync (or Async), Async 1
HASP	EBCDIC	None	CRC-16	32_{32}	d_l	Sync
IPARS	IPARS	None	CRC-6	3_F3_E	None	Sync Bit sense-invert Bit order-MSB first
MODE 4c	ASCII 7	odd	LRC	16_{16}	d_l	Sync
UNISCOPE	ASCII 7	odd,SYNC even, ASYNC	LRC	16_{16}	d_l	Sync,Async 1
VIP7700	ASCII 7	odd,SYNC	LRC	16_{16}	d_l	Sync

IPARS Setup

The IPARS application is located on the HP 4952A Utility Disc (filename IPARS_MEC). Load the IPARS application. Only the Top Level Menu will change. Sync1 (S1 or 3_F Hex) characters are not captured. Triggering on the start of the message should only be made on the Sync2 (S2 or 3_E Hex) character.

Note The resident HP 4952A IPARS function can be setup without the IPARS application loaded,but erroneous results will occur when monitoring or simulating.

---

www.valuetronics.com

The Character protocol IPARS has specific settings shown below.

Protocol	Char
Code	IPARS0 or IPARS1. The 0 or 1 refers to the idle state transmitted for normal bit sense. IPARS0 will leave the line idling in 1's when transmitting if "Bit sense = Inverted". IPARS1 will idle the line in 0's if "Bit sense = Inverted".
Bits/sec	Your bit rate
Parity	None
Transparent text char	None
Mode	Sync
Sync on	3_F3_E
Drop sync	Usually 0 after $0_D0_D1_D3_73_F3_F3_F$ for IPARS0 or $3_F0_D1_D3_73_F3_F3_F$ for IPARS1. This field is used to specify conditions that will cause Drop sync and begin searching for sync.
Err chk	CRC 6
Start on 3_E3_E.	Each message begins with a sequence 3_F3_E. The HP 4952A wants two individual start characters, not a sequence. Both characters should be 3_E which is the last character of the only valid start sequence for IPARS.
Stop on $0_D1_D2_D3_D$.	This field is used to specify end-of-message characters. When one of these characters is detected, it will stop accumulating CRC and will expect the total CRC count. These four characters are individual stop characters, not a sequence DTE clock.
Suppress	User-defined
Bit sense	Most commonly set to Inverted.
Bit order	MSB

www.valuetronics.com

The typical IPARS setup is:

Protocol	Char	Disp mode	2Line or Data&State
Code	IPARS0		
Bits/sec	4800	Err chk	CRC6
Parity	None	Start on	3_E3_E
Transparent		Stop on	$0_D1_D2_DB_D$
text char	None		
		DTE clock	DCE
Mode	Sync	Suppress	None
Sync on	3_F3_E	Bit Sense	MSB
Drop sync	0 chrs	Bit Order	Inverted
after	$0_D0_D1_D3_F3_F3_F3_F$		

Modified Error Check (MEC)

The Modified Error Check (MEC) application is useful when the protocol being monitored has multiple "Start on BCC" characters before data begins, and it is not an IPARS protocol.

The Modified Error Checking application which is located on the HP 4952A Utility Disc (filename IPARS_MEC) must be loaded before being used. The Top Level Menu will change to show that Modified Error Checking (MEC) has been loaded.

The Modified Error Check application is invoked during a run when the data code is not IPARS0 or IPARS1, and both the "Start on BCC" characters are the same. The modified error calculation makes sure that CRC or LRC calculations begin only after the last "Start on BCC" character encountered. When this application is not loaded, the HP 4952A begins calculating the error check after the first "Start on BCC" character encountered.

www.valuetronics.com

X.75

X.75 is an inter-network protocol. X.75 is the protocol used by X.25 networks to talk to each other. There are two major differences between X.25 and X.75:

- X.25 (1980 version) allows a Level 2 control field one byte long. The 1984 version of X.25 allows one or two control field bytes (Normal or Extended Control).
- X.75 has an additional network utilities field that is inserted in the header of certain packet types.

Setup the HP 4952A for X.75 by performing the following:

1. From the Top Level Menu press **Setup** .
2. Select HDLC as the protocol.
3. Select either Normal Control or Extended Control.

In the Monitor and Simulate menus, the softkey assisted entry for Level 2 and Level 3 is available for both normal and extended control. This allows flexibility to create triggers and/or send strings that are normal control (Ext Ctrl = OFF) or extended control (Ext Ctrl = ON) in Level 2, and Modulo 8 or Modulo 128 in Level 3.

Extended Asynchronous Baud Rates

The extended asynchronous baud rates 56K and 64K bits per second are supported as a specia application which can be loaded from the Utility Disc (filenames ASYNC_56K and ASYNC_64K) supplied with each HP 4952A instrument.

These applications provide the means to either monitor or simulate asynchronous data speeds of 56K or 64K bits per second. The HP 4952A retains its full capabilities for other data speed when this application is loaded.

www.valuetronics.com

Loading the Extended Asynchronous Baud Rate Applications

1. Insert the Utility Disc into the HP 4952A disc drive.
2. From the Top Level Menu, press MORE, then Mass Store .
3. Move the cursor over the desired file, ASYNC_56K or ASYNC_64K, and press Load .
4. Press Execute to load the application. When the application is finished loading, the screen will revert back to the Top Level Menu.

Selecting the Extended Asynchronous Baud Rates

1. From the Top Level Menu, press Setup .
2. Cursor to the Protocol field and select Char .
3. Cursor to the Mode field and select Async .
4. Cursor to the Bits/sec field. Select either 56K or 64K (whichever is available). The other data speeds are accessed by pressing MORE.

Compatibility With Other HP Protocol Analyzers

The following Setup menu entries are unique to the HP 4952A and are not supported on other HP protocol analyzers:

Ext NRZI
CCITT set 0
Mono Sync
38400, 48000, 56000 and 64000 bits per second (not supported on the HP 4951C)
Async 12kbps, 14.4kbps

If you load an HP 4952A Setup menu into another HP protocol analyzer, either from disc or remote transfer, the entries listed above will be changed by the other analyzer into a different entry.

Before you use an HP 4952A Setup menu on another HP protocol analyzer check the entries to avoid any discrepancies.

www.valuetronics.com

www.valuetronics.com

4

Monitoring

- Introduction
- Monitoring the Line
- Monitoring the Buffer
- Monitor Menu Softkey Commands
- Compatibility With Other HP Protocol Analyzers
- Monitor Programs
- Triggering
- Measuring Time
- Counting Events
- Conditional Branching
- Unconditional Branching
- Program Pauses
- Starting and Stopping
- Commenting
- Subprograms
- Monitor Error Messages
- Monitor Status Messages

www.valuetronics.com

Introduction

Monitor means to look at. When you monitor a data link, you look at the data passing on the link. The HP 4952A makes it easy for you to look at the passing data with several different display formats.

Monitoring has no effect on the line because it is passive and non-interactive.

The HP 4952A lets you monitor data in the run menu by watching the data scroll across the screen, or you can go to the monitor menu and tell the analyzer to look for events and perform measurements on user set conditions.

Two Types of Monitoring

The HP 4952A enables you to do two types of monitoring:

Monitoring the Line	Monitoring the line means that you connect the analyzer through the appropriate pod to the link under test.
Monitoring the Buffer	After collecting the data in the buffer, either by monitoring the line or by loading from disc, you can monitor the buffer exactly as if you were monitoring the line. You can perform any monitoring tests that you might do when monitoring in real-time from the line.

www.valuetronics.com

Monitoring the Line

Monitoring a line is one of the most common uses for a protocol analyzer. You simply connect the analyzer to the line and watch the activity scroll across the screen.

Hookup

To monitor a line, you must connect the analyzer through its pod and Y-cable into the line as shown below.

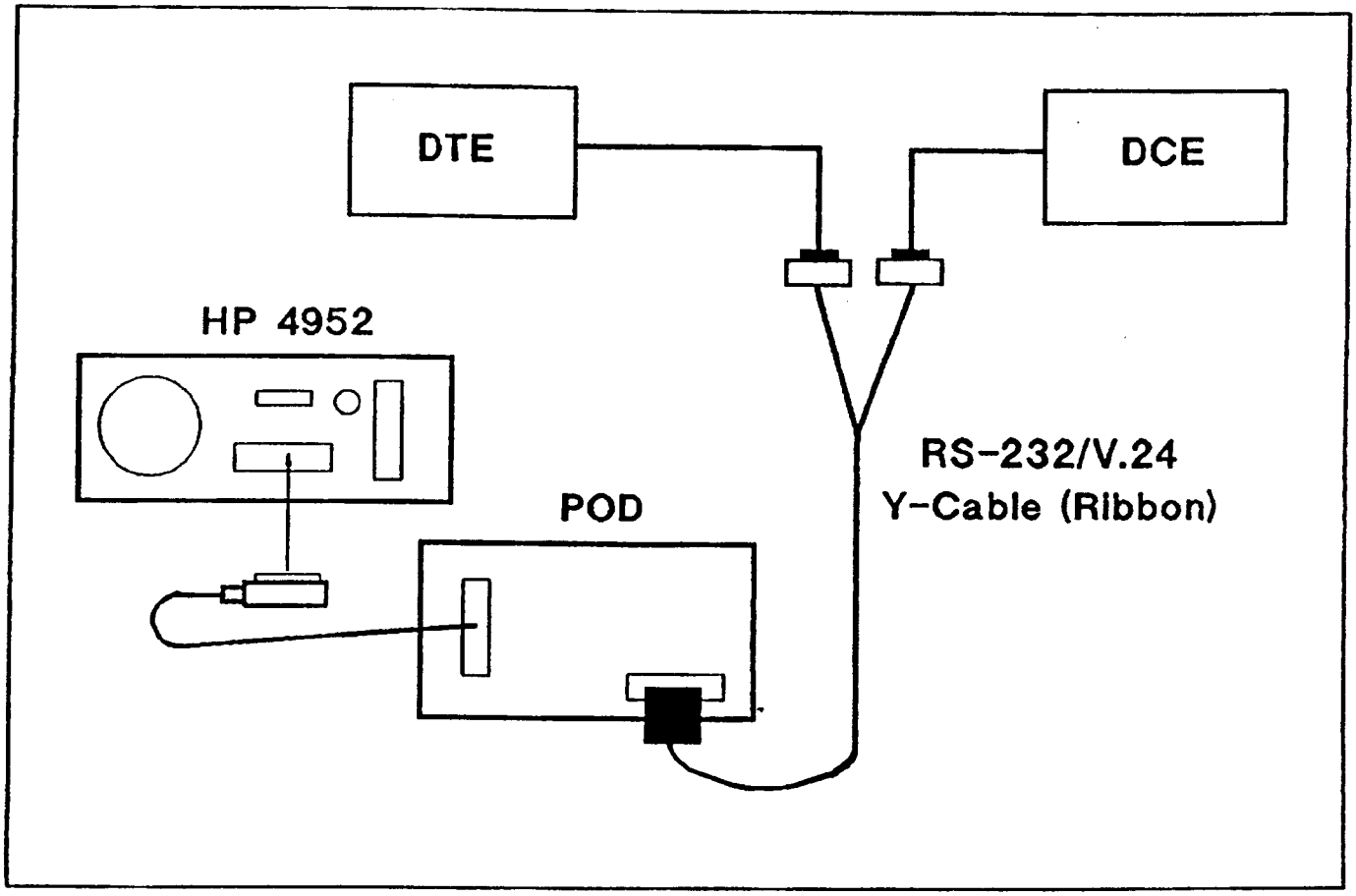

Figure 4-1. Hookup for Monitoring the Line

www.valuetronics.com

Setup

Before monitoring the line, you must set up the analyzer to the parameters being used by the data link. The analyzer must know basic information, such as protocol, data code, and data rate. For example, if the link is using X.25 protocol, ASCII data code, and 9600 bits/sec, you must enter these values into the setup menu or the data may not be recognizable.

To monitor a line you can use Auto Configure. Even on nonstandard protocols Auto Configure can help you get started by finding some of the parameters.

Display Mode

Use the display mode field in the setup menu to select the type of display you wish. Each display shows the data in different ways. For example, the "two line" format shows both the DTE and DCE channels. The "DTE only" and "DCE only" formats show only one channel. The "data & state" format shows both channels, as well as lead timing information. The "Frame" and "Packt" formats decode frame and packet information.

www.valuetronics.com

Monitoring the Buffer

Monitoring the buffer is often called "post-processing." Post-processing is a very useful feature. Once you have captured data in the HP 4952's buffer, you can repeatedly run monitor menu programs on the data.

Monitoring the buffer requires no connection. All you need is buffer data. You can fill the buffer with data in three ways: capture the data while monitoring the line, load the buffer from the disc, or upload/download during a remote operation.

Setup

Use the setup menu to configure the analyzer to the line parameters used when the data was collected. For example, if the data in the buffer is BSC protocol, EBCDIC data code, and 9600 bits/sec, then you must set the analyzer to those parameters. If you're not sure what some of the parameters are, change the setup and look at the buffer in the examine data menu to see if the data is more understandable.

Collecting Data From the Line

As described on previous pages, one way of collecting data in the buffer is to monitor or simulate on-line. As you simulate or monitor the line, data is automatically stored in the HP 4952A's 32 Kbyte (768 Kbyte with Option 02) buffer. The buffer is a first-in, first-out memory in which the oldest data is overwritten by the newest.

Another way of putting data in the buffer is to load data files from disc (see Chapter 12, "Mass Store").

www.valuetronics.com

The Monitor Menu

It is not necessary to use the Monitor Menu to monitor a line. It is possible to monitor a line from the Run Menu, however, you cannot write test programs that look for events and highlight or beep.

By using the Monitor Menu and writing programs giving the HP 4952A specific instructions you can increase the effectiveness of the instrument.

To access the Monitor Menu, press **Mon Menu** in the Top Level Menu. The analyzer then allows you to begin writing programs (see Table 4-1).

Table 4-1. The Monitor Menu

```
Monitor

Block 1

Start          Stop          Inc     If      When          [MORE]
                             Ctr             Trig

High-          Beep          Reset   Goto                  [MORE]
Light                                Blk     Lead

Gosub          Re-           Move                  Mes-    [MORE]
Block          turn          Crsr                  sage

Insert                       Delete                Print   [MORE]
Line      Block      Line    Block   Prg           Prog
```


www.valuetronics.com

Monitor Menu Softkey Commands

Most of the softkeys in the monitor and simulate menus are the same. The commands that appear in the Monitor Menu are those that only pertain to capturing data.

All of the first-level softkey commands that appear in the monitor menu are summarized below in the order they appear.

Start

The start softkey is available to start the **Display** , **Disc** , **Timer** . 'Start' and 'Stop' commands should be tied to the start of execution or the last preceding trigger.

Stop

The stop softkey is available to stop the **Display** , **Disc** , **Timer** and **Tests** . 'Start' and 'Stop' commands should be tied to the start of execution or the last preceding trigger.

Inc Ctr

'Increment Counter' uses one of the five counters to count events and select an increment value.

If

An 'If Counter' causes a program branch according to the condition of a counter. An 'If Lead' causes a branch according to the condition of a lead at the time of the last trigger. If the statement is true the program will jump to a specified block. If the statement is false the program goes to the next block.

When Trig

'When Trig' is the only statement that defines a trigger event. The analyzer can look for any event and then branch to a designated action. Program execution stops and waits until at least one 'When Trig' condition is satisfied. Triggers are the only way to provide a reference point in the data stream.

www.valuetronics.com

Highlight

Marks up to the last 63 trigger events in the buffer.

Beep

Audibly notifies you when the last preceding trigger is found.

Reset

Resets to zero and stops a specified Timer or Counter .

Goto Blk

Effects a branch to another block.

Message

'Message' statements are used for entering comments in a program.

Gosub Block

The 'Gosub Block' command causes a jump to a subroutine that ends in a 'return' statement. Without a 'return' statement 'Gosub Block' acts like a 'Goto Block' command.

Return

A command that terminates a subroutine and return to the command immediately following the 'Gosub Block' statement.

Insert Line

Inserts a new line when the cursor is at the beginning of a line.

www.valuetronics.com

Insert Block

Inserts a new block when the cursor is at the beginning of a line.

Delete Line

Deletes a line when the cursor is at the beginning of a line.

Delete Block

Deletes a block when the cursor is at the beginning of a line.

Delete Prg

Deletes the entire monitor program when the cursor is at the beginning of a line.

Print Prog

Prints the monitor program if an ASCII printer is connected.

Move Crsr

Allows the cursor to be positioned at the start of a block.

www.valuetronics.com

Compatibility With Other HP Protocol Analyzers

The following Monitor functions are unique to the HP 4952A and are not supported on other HP protocol analyzers.

Message statements
Gosub Block and Return
When triggers
Inc Cntr by n

If you load an HP 4952A Monitor menu or program into another HP protocol analyzer, either from disc or remote, the functions listed above will be changed by the other analyzer into a different function.

Before you use an HP 4952A Monitor menu or program on another HP protocol analyzer, verify the menu program to avoid any discrepancies.

Caution Remove all 'Message' statements before transferring programs or menus from an HP 4952A to another non-4952A protocol analyzer.

www.valuetronics.com

Monitor Programs

You must enter programs in the Monitor Menu to instruct the HP 4952A to look for specific events or make measurements. Programming in the Monitor Menu is softkey driven making it fast and easy.

Softkey Programming

Softkey programming is easy. Press the appropriate softkey and other choices appear leading you through the program. For example, pressing **Start** causes the new softkey choices **Display** , **Disc** , and **Timer** to appear.

Setup

Always set up the analyzer with the proper parameters before monitoring. If the setup is incorrect the monitor program may not work. For example, if the data code being monitored is EBCDIC, but your setup is ASCII, the data will be decoded incorrectly.

If you change the setup menu after entering a monitor program, the program may have blinking entry fields indicating those entries are inappropriate for the setup. If you change the setup data code or protocol after entering a character string, you must retype the string. The program will fail unless you change either the setup or the program.

Moving Through the Menu

Use the cursor keys to move around the menu and roll the display up and down. Note that the softkeys change as you move the cursor to different fields. You can change an entry at any time if the appropriate softkey appears. Press MORE whenever the word appears at the lower right corner of the screen, and more softkeys appear giving you more options. **Move Crsr** can be used to position the cursor at the start of any block.

www.valuetronics.com

Blocks

Programs are organized in blocks. A maximum of 31 blocks is allowed per program. Blocks provide a reference for looping back or jumping ahead during program execution. When you insert and delete blocks, the numbering is automatically adjusted.

Inserting and Deleting Lines and Blocks

Use the Insert Line/Block and Delete Line/Block/Prg softkeys for editing programs. Press MORE whenever the cursor is at the beginning of a line to see these softkeys.

Note The Insert Block is especially useful when editing programs.

Inserting and Deleting Characters

To trigger on characters, you must enter character strings after a 'when DTE/DCE' command. To insert or delete characters in a 'when' string, use the Insert and Delete softkeys while the cursor is positioned in the string. The Delete key is continuous, the Insert key is not. To insert more than one character the Insert key must be pressed for each character.

Executing Monitor Programs

You must exit the Monitor Menu and go to the Run Menu to execute a program. Press Run Menu and then the appropriate -Monitor-Line/Buffer softkey.

If you are not using a monitor program, go to the Top Level Menu, press Run Menu , and the appropriate -Monitor Line/Buffer key.

If you wrote a program in the Monitor Menu, go to the Run Menu to execute the program.

www.valuetronics.com

Triggering

Triggering means to look for an event. By telling the analyzer to trigger on an event, you are telling it to look for that event in the data stream.

The HP 4952A can trigger on up to 63 different events simultaneously. Once the analyzer has found an event, it can:

- notify you by beeping
- mark the event in memory
- count the event
- measure the time between events
- branch to another command

Defining Triggers

Only the 'when' statement can define a trigger. Press the When Trig softkey in the monitor and simulate menus to access the 'when' statement.

Triggers Provide a Reference

'When' statements provide a point of reference in the data stream. They tell the analyzer exactly when to start an action. For example, all 'highlight', 'beep', 'start' and 'stop' statements reference the last preceding 'when' statement in the program. Without a preceding 'when' statement, the analyzer cannot determine the exact point at which to start, stop, beep, or highlight.

If you put a command at the beginning of the program, action starts at the beginning of execution. But if you need to have an action start at the precise time that some event occurs, you must use a preceding trigger for that event. For example, to measure time you must tell the analyzer exactly when to start the timer.

www.valuetronics.com

Types Of Triggers

There are six different types of trigger statements. You can trigger on DTE or DCE characters, lead changes, errors, time-outs, and your own softkey entries.

Characters

To trigger on characters, specify "DTE" or "DCE" and type in the desired characters.

```
When DTE this is a character string
        then goto Block 2
When DCE this is a character string
        then goto Block 2
```

Leads

To trigger on lead changes, select the desired lead from the softkeys. The appropriate leads appear on the softkeys according to the pod attached.

```
When Lead RTS goes Off
        then goto Block 2
```

Errors

Depending on the setup menu, you can trigger on FCS, BCC, parity errors, aborted frames or framing errors.

```
When Error FCS on DTE
        then goto Block 2
```

Timeouts

On the HP 4952A you can specify one of five timers in 1 millisecond increments from 0 to 65534.

```
When Timer 1 > 100
        then goto Block 2
```

Softkeys

You can trigger on the press of softkeys 3, 4, or 5. The softkeys are numbered from 1 to 6 from left to right.

```
When Softkey 3
        then goto Block 2
```


www.valuetronics.com

Marking Triggers

The HP 4952A will find events that you specify as triggers. The HP 4952A can mark each event in memory, or it can beep whenever the event occurs, or it can do both.

Beep

The 'beep' statement provides an audible sound for some specified condition. The analyzer can beep anytime, and as often as desired. In the following example, the analyzer beeps every time the string "abc" occurs on the DTE channel.

```
Block 1:
When DTE  abc                    Tell the analyzer what event to look for.  Note:
   then goto Block 2             the 'beep' command refers to the last preceding
                                 trigger event.

Block 2:
Beep                             Beep and then begin looking for the event again.
   then goto Block 1
```

Highlight

Use the 'highlight' command after a 'when' statement to mark trigger events in memory. Highlighted characters appear in half-bright, inverse video both during run-time and in the examine data menu. Lead and timer transitions appear on the DCE line in the examine data menu if you are not using the Data & State display.

The HP 4952A remembers the last 64 highlights in the buffer. Only the last character of a trigger string is highlighted. Highlights are lost when the data is stored to disc.

The following example highlights the "z" in the "xyz" string whenever it occurs on the DCE line and causes a beep whenever "xyz" is found.

```
Block 1:                         Find the event.  Note that the "when" statement
When DCE  xyz                    must precede the "highlight" command.
   then goto Block 2

Block 2:                         Highlight the event and beep.  Then start looking
Highlight                        for the event again.
   and then
Beep
  and then goto Block 1
```


www.valuetronics.com

Measuring Time

Timers are program commands that measure the time between triggers. The HP 4952A monitor and simulate menus each contain five timers identified by numbers, 1, 2, 3, 4, and 5. Each timer can measure up to 65,535 milliseconds.

Measuring Time Between Triggers

Timers measure the time between trigger events. In the example below the 'start timer' and 'stop timer' statements refer to the last preceding trigger statement (regardless of how far back in the program). A timer must have a reference point to start it and to stop it. Triggers provide a reference because they point to real events in the data stream.

```
When
   Start Timer [ ]
   ...
When...
   Stop Timer [ ]
```

How To Access Timers

To enter a 'start timer' statement in the monitor or simulate menu:

- Press **Start**
- Press **Timer**
- Select the timer number from the softkeys

For example, the program statement to start timer 3 looks like this:

```
Start Timer 3
```

To stop the timer, use the same procedure, but press **Stop** instead of **Start**.

Note There must be a preceding trigger statement in the program to provide a reference for the timer statement.

---

www.valuetronics.com

To measure the time interval between two events, use two trigger statements to identify the events. After one trigger statement identifies the first event, start the timer. The second trigger statement identifies the second event, stop the timer.

This example shows the correct way to measure the time interval between two trigger conditions. The starting and stopping of the timer is entirely dependent upon the occurrence of the two trigger conditions.

```
Block 1:
When Lead RTS goes On                    Timer 1 starts when this trigger occurs.
   then goto Block 2

Block 2:
Start Timer 1                            Timer 1 stops when this trigger occurs.

Block 3:
When Lead CTS goes On
then goto Block 4

Block 4:
Stop Timer 1
```

Reset a Timer To Zero

Timers are always reset to zero at the beginning of execution and can can be reset during program execution with a 'reset' statement:

```
Reset Timer 1
```

Stop a Timer Without Resetting

Timers can be stopped under program control with either a 'stop timer' or a 'stop tests' statement.

Caution Do not use a 'Stop Tests' statement unless you want to stop program execution.

---

www.valuetronics.com

How Timers Work

Timers measure by looking at time stamps that are inserted with the data entering the analyzer. Because data is stored in a 32K first-in, first-out buffer, the time stamps are also stored. The timers measure the number of time stamps between trigger events.

Time stamps are stored in the buffer depending upon the bits/sec selection. That's why the bits/sec selection is so important, even with synchronous protocols. If bits/sec is slower than the line rate timing measurement resolution is reduced. If bits/sec is faster than the line rate the buffer is filled with more time stamps than necessary and storage efficiency is reduced.

In bit oriented protocols, the start flag and address of a string have the same time mark. This is also true of the last character, the FCS, and the end flag.

Cursor Timing

Cursor timing is available in the Examine Data menu and is a manual technique to measure time. With data in the buffer:

- Press **Exam Data** to enter the Examine Data Menu
- Move the cursor to the start point of the measurement event
- Press **Start Time**
- Move the cursor to the event where you want the measurement to end
- Press **End Time** .

The time is shown at the top of the display:

```
TIME =
```

The Effect Of the Data Filter On Timing

If you are filtering out certain characters with the data filter, you cannot measure the time between them because they aren't in the buffer. And if you have 'timing information' turned off in the data filter, your timing measurements will be inaccurate.

Ensure 'timing information' is turned on in the data filter to measure time. You cannot measure time between events if you have filtered them out.

www.valuetronics.com

Counting Events

```
Increment Counter [ ]  by [   ]
```

The 'increment counter' statement is used for counting events. The HP 4952A has five counters that can count five different events simultaneously.

Accessing the Inc/Ctr Softkey

To enter the 'increment counter' statement into a monitor or simulate program:

- Press Inc Ctr
- Select the counter number from the softkeys
- Type in the increment value

The counter can be incremented by any number up to 65,535. For example, if you increment counter 4 by 2 every time an event occurs, the statement looks like this:

```
Increment Counter 4 by 2
```

Countable Events

Countable events can be characters or character strings, lead changes, timer changes, counter changes, or program loops; almost any action the analyzer performs can be counted. To use the counters effectively, place the increment counter statement directly after the event of interest.

Maximum Count

Each counter counts to 65,535 and then starts over from zero. You can cascade counters by having one counter increment whenever a second counter overflows.

www.valuetronics.com

Resetting Counters

Counters are always reset to zero at the start of execution. Counters can also be reset under program control with the 'reset counter' statement. When they are reset during a program, they go to zero and do not restart unless you start them again with an "increment counter" statement.

Decrementing Counters

To decrement a counter by 1, set the increment value to 65,535 rather than 1. To decrement by 2, set the increment value to 65,534. And so on.

Example 1: Counting Parity Errors

The following example counts the number of parity errors on the DTE line.

```
Block 1:
When Error Parity on DTE                This trigger finds the  parity errors.
   then goto Block 2

Block 2:
Increment Counter 1 by 1                Count each error and continue looking.
   and then
goto Block 1
```

Example 2: Counting Positive Lead Changes

The following example counts the number of times RTS goes on.

```
Block 1:
When Lead RTS goes On                   Look for positive RTS  transitions.
then goto Block 2
Block 2:
Increment Counter 3                     Count each positive RTS  transition and continue
   and then                             looking.
Goto to Block 1
```


www.valuetronics.com

Conditional Branching

Using the 'if' statement you can cause a branch in the program, depending on the status of a counter or lead at the time of the last trigger. Counters are independent of line status. Thus, the 'if lead' statement requires a 'when' statement somewhere earlier in the program.

Accessing the If Softkey

To enter an 'if' program statement in the monitor or simulate menu, press If and then either Counter or Lead .

'If Lead'

```
If Lead      [ RTS ]        is      [ Off ]
             [ CTS ]                [ On  ]
             [ DSR ]
             [ DTR ]
             [ CD  ]
             then goto Block [  ]
```

The correct leads automatically appear on the display depending upon the pod connected to the analyzer. For example, the above leads would appear on the softkeys if an HP 18179A (RS-232C) pod were connected.

In the following example, if DSR is on when the following statement is executed, the program will jump to block 5. Otherwise, execution will continue with the next sequential statement.

```
If Lead DSR is On
   then goto Block 5
```

When Is Lead Status Checked?

To test lead status, you must tell the analyzer the precise point in time using a trigger. 'If lead' statements always test the link at the time the last trigger was found. There should always be a trigger statement somewhere in the program before the 'if' statement. This preceding trigger should define the point in time of interest.

www.valuetronics.com

Example: 'If Lead'

A trigger must be used to define the exact time, therefore a 'when' statement must appear earlier in the program when using 'if lead'. An 'if lead' statement always refers to the lead condition at the time of the last trigger.

In this example, block 2 checks the status of CTS only when the trigger in block 1 is satisfied.

```
Block 1:
When Lead RTS goes On
   then goto Block 2

Block 2:
If Lead CTS is On
   then goto Block 4
```

'If Counter'

```
If Counter      [ 1 ]   >       [ type a number ]
                [ 2 ]
                [ 3 ]
                [ 4 ]
                [ 5 ]
                then goto Block [  ]
```

To use the 'if counter' command, press **Counter** and select the counter number from the softkeys. Then type the comparison number. You can enter any number from 0 to 65,534.

Example: 'If Counter'

Counters run independently of line status. Therefore, 'if counter' statements do not need to be preceded by 'when' statements.

www.valuetronics.com

The following two examples are equivalent: they count the number of times RTS goes on. When RTS has gone on 100 times, the test stops.

```
Block 1
When  RTS goes On
   then goto Block 2

Block 2
Increment Counter 1 by 1
If Counter 1  >  99
   then goto Block 4

Block 3
Goto Block 1

Block 4:
Stop Tests
```

```
Block 1
When RTS goes On
   then goto Block 2

Block 2
Increment Counter 1 by 65535
If Counter 1 > 65436
   then goto Block 1

Block 3
Stop Tests
```

How 'If' and 'When' Are Different

Only 'when' can define a trigger and wait for an event. 'If' tests the current status. Unlike 'if', the 'when' statement stops execution until the trigger is satisfied.

Combining 'If' Statements

'If' statements in the same block are 'ORed'. The analyzer looks for all the conditions at the same time. The first satisfied 'if' controls the branch.

www.valuetronics.com

Combining 'If' and 'When'

'If' can be used to guarantee action. For example, if you enter:

```
When Lead RTS goes Off
   then goto Block 2
```

and RTS is already off, the program never moves. No program statements are executed until the trigger is satisfied. The 'when' statement requires a transition. On the other hand, if you enter:

```
If Lead RTS is Off
   then goto Block 2
```

and RTS is on when the 'if' statement is executed, the program will never go to block 2. Unlike the 'when' statement, 'if' does not wait for a condition to happen. To ensure that execution always moves to block 2 when RTS goes off, enter the following:

```
If Lead RTS is Off
   then goto Block 2
When Lead RTS goes Off
   then goto Block 2
```


www.valuetronics.com

Unconditional Branching

```
Goto Block [ ]
```

Use the 'goto block' command to branch to a different part of the monitor or simulate program. This is an unconditional branch because it forces a jump in the program.

'If' and 'When' Always Force a Branch

Both 'if' and 'when' commands automatically append a conditional 'goto block' statement. In the following example, the analyzer looks for a positive RTS transition. You can put any action you want into block 2.

```
Block 1:
When Lead RTS goes On
   then goto Block 2

Block 2:
Start Disc
```

You can use 'goto block' to loop continuously. In the following example, you increment counter 1 until it reaches 200 and then jump out of the loop.

```
Block 1:
Increment Counter 1 by 1
If Counter 1 > 199
   then goto Block 3

Block 2:
Goto Block 1
```


www.valuetronics.com

Program Pauses

There are many times in a program you must enter a pause statement. For example, what if you want to wait 40 milliseconds for a relay to open before performing the next program command?

Using a Timer To Pause

You can use timers to delay the program for a specified time. In the following example, you may want the analyzer to beep every three seconds:

```
Block 1:
Beep
   and then
Start Timer 1

When Timer 1 > 3000
   then goto Block 2

Block 2:
Reset Timer 1
   and then
Goto Block 1
```

Using a timer to insert a delay is not always the right solution in some situations. Timer status can only be tested with a 'when' trigger. But if you tell the analyzer to trigger on an event, you are telling it to 'look for' that event. The trigger pointer must move through the data looking for the trigger event -- which is in this case a particular time stamp.

The trigger pointer cannot move backwards after it has moved through the data looking for the correct time stamp. A timer is the best way to insert a program delay if you do not use multiple triggers.

www.valuetronics.com

Using a Counter To Pause

You can also use a counter to delay program execution. Each increment of the counter takes about 3.6 milliseconds. You may want to experiment to find more exact delay times. Counters are tested by 'if' statements any problems are minimized with counters if the 3.6 ms delay is acceptable.

For example:

```
Block 1:
Beep

Block 2:
Increment Counter 1 by 1
If Counter 1 > 822
   then goto Block 4

Block 3:
Goto Block 2

Block 4:
Reset Counter 1
   and then
Goto Block 1
```

Note Do not use the 'wait' statement in the simulate menu to delay simulate programs. 'Wait' affects 'send' and 'set lead' output statements.

---

www.valuetronics.com

Starting and Stopping

Using 'start' and 'stop' commands, you can operate the display or the disc under program control. The 'stop tests' command halts program execution.

Note Do not use the 'wait' statement in the simulate menu with these commands. 'Wait' affects 'send' and 'set lead' output statements.

'Start' and 'Stop' Need a Reference

There are two ways to provide a reference point for 'start' and 'stop' commands:

1. Start of execution. If you put a 'start' or 'stop' command at the beginning of the program, it becomes active as soon as you begin execution in the run menu.

2. Preceding trigger. The last 'when' statement in the program provides a reference. A 'start' or 'stop' becomes active at the point in the data stream when the last trigger event was found. If you insert a program pause using a timer or counter, 'start' or 'stop' is delayed by the amount of the pause.

Filtering Data With 'Start' and 'Stop'

The 'start' and 'stop' commands can filter events of interest. Define an event of interest in a 'when' statement, and then start or stop the display or disc when that event occurs.

www.valuetronics.com

'Start' and 'Stop' Disc

You can start and stop the disc to capture only events of interest under program control. You can start and stop the disc as often as you like.

The following rules apply to 'start' and 'stop' disc statements:

1. The disc can be started and stopped more than once.

2. The 'start' command tries to store the 512 bytes of the buffer preceding the event. The 'stop' command attempts to store the 512 bytes of the buffer after the event (512 bytes may be up to 250 characters, depending on time stamp frequency and line utility). There is no way to indicate the event on the disc because highlights are not stored to disc.

3. Timing measurements should not be made across data segments. The results could be in error.

In the following example, the analyzer captures data on disc from the time RTS goes on until RTS goes off.

```
Block 1:
When RTS goes On
   then goto Block 2

Block 2:
Start Disc

When RTS goes Off
   then goto Block 3

Block 3:
Stop Disc
   and then
Goto Block 1
```

NOTE

Commands such as 'Start Disc' are ignored when running from the buffer.

www.valuetronics.com

When you enter the Run Menu and execute a monitor or simulate program with a 'start disc' statement, the analyzer asks you to provide a file name and comment for the new disc file. The file type is always 'Menu & Data' and is not changeable.

Function: Store

File Name _____

Comment _____

As soon as you have entered a file name and comment, press **Execute** to begin running the program.

'Start/Stop Display'

The 'stop display' statement freezes the display after the occurrence of some trigger event. That trigger event and the preceding data are displayed on the screen. Execution is not stopped even though the display is turned off. The buffer is continually being filled with new data. To start the display again, use a 'start display' statement, or the **Start Display** softkey.

Note It is efficient to turn the display off if you are running a program that causes buffer overflow errors.

The following example freezes the display if there is a frame check sequence error on the DTE line.

```
Block 1:
When Error  FCS on DTE
   then goto Block 2

Block 2:
Stop Display
```


www.valuetronics.com

'Stop Tests'

The 'stop tests' statement halts execution. No new data is loaded into the buffer, the disc stops, and any active timers stop. The following rules apply:

1. A 'stop tests' command is executed only after all the 'wait', 'send', and 'set lead' statements prior to it are performed.

2. The 'stop tests' statement halts execution of all other program statements.

3. If there are no 'when' statements in the program, the display will continue running until rule #1 is satisfied.

4. The EXIT key is the only way to halt immediately.

The following example stops execution if there is a Negative Acknowledgment (NAK) on the DTE line. Note that you enter the NAK by pressing [CNTL]U.

```
Block 1:
When  DTE  NK
   then goto Block 2

Block 2:
Stop Tests
```


www.valuetronics.com

Commenting

The HP 4952A provides the capability for commenting programs with the 'message' statement. These messages are also displayed above softkeys 3, 4, and 5 during execution. Messages are entered the same way as send strings, except that characters can only be inserted or deleted. Hex characters cannot be entered.

Uses For 'Message'

1. You can insert comments in a long program to help you remember what different parts of the program do.

2. You can have the analyzer display a message during executionfor debugging programs. You can discover where program execution is locking up.

3. You can have the analyzer tell you to perform some action during execution, such as pressing a softkey.

4. You can label softkeys 3, 4, and 5, which are those used for softkey triggers.

How To Enter Messages

Press MORE twice, then Message and begin typing text after 'Message'. Messages can be up to 16 characters long (including spaces).

You must enter something in the message field, even if it is only blanks. If you do not enter anything in the field, an error message appears when you try to execute.

Note It is a good practice to fill in all 16 characters of the message field, using spaces as necessary.

If a message is not a full 16 characters long, some characters of a previous message may still show on the display. For example, if your first message was EXIT RUN PROGRAM, and the second message was START PROGRAM, the display after the second message would be START PROGRAMRAM. Filling the rest of the second message with spaces would fix the problem.

www.valuetronics.com

If a message is used to label softkeys 3, 4, and 5, the problem just described becomes an advantage. A message can be sent to label the three softkeys. Later in the program, a new message can change one of the softkeys and leave the others.

How To Display Messages During Execution

Messages are identified by their block number. Whenever a block with a message, or multiple messages, is executed, the message(s) in that block are displayed. A message can therefore be displayed during execution in the following ways:

1. The message block is executed during normal sequential execution.
2. A 'goto block' command references the message block.
3. 'If' or 'when' statements reference the message block.
4. A 'gosub block' command references the message block.

Example: Using a Prompt

You can use the 'message' command in combination with the 'when softkey' trigger to tell you when to press a softkey during execution.

```
Block 1:
When ...                                  When some event occurs press softkey 3.
   then goto Block 2

Block 2:
Message  Press Softkey 3                  After pressing softkey turn off the message.

Block 3:
When Softkey 3
   then goto Block 4

Block 4:
Message  ____________                     Note that you must actually enter the blanks
                                          with the space bar.
```


www.valuetronics.com

Subprograms

You can enter subprograms in the main monitor/simulate program using the 'gosub block' and 'return' commands. You can nest subroutines within subroutines, up to a depth of eight. Subprograms are useful if there is a sequence of statements used repeatedly in the program. You can shorten the program by entering the sequence of statements once. If you put a 'retrn' statement at the end of the sequence, you can call that sequence anytime with a 'gosub block' statement.

The 'gosub block' statement causes a jump to the designated block. The 'return' statement causes a jump back to the line immediately following the 'gosub block' statement.

Example 1: Subprograms

Let's assume there are several places in a program where one of three different error messages might need to be displayed. Instead of entering all of the different error messages in the program repeatedly (which could make the program longer) you can enter three subprograms.

```
Block x:
Message  This is BCC Err
   and then
Return

Block xx:
Message  This is Par. Err
   and then
Return

Block xxx:
Message  This is Fram Err
   and then
Return
```


www.valuetronics.com

Example 2: Using a Delay Repeatedly

In the following example, the same five second delay is used three times.

```
...

Block 5:
Start Display
   and then
Gosub Block 25

Block 6:
Stop Display
   and then
Gosub Block 25

Block 7:
Start Display
   and then
Gosub Block 25

...

Block 25:
Start Timer 1

When Timer 1 > 5000
   then goto Block 26

Block 26:
Reset Timer 1
   and then
Return
```


www.valuetronics.com

Monitor Error Messages

Max Length

This message appears if you attempt to specify more than 255 characters in a single string.

Max Strings

This message means that the monitor and simulate menus combined contain strings which have a total of more than 2000 characters.

Menu Full

The monitor and simulate menus combined contain 143 steps.

Invalid Mon/Sim Menu

This may occur if you enter 'When DTE/DCE' without completing the trigger branching instruction. This error can also occur if you leave a 'message' or 'send' statement empty. You must enter something into the message field, even if it is only blanks.

No File; Run Aborted

The menu requesting the run-time disc data file was exited prior to being executed.

File Already Exists

The menu requesting the run-time disc data file was given the name of a file already created.

DLC Error

HP 4952A hardware problem. Contact HP for service.

www.valuetronics.com

Monitor Status Messages

Text

Enter a single keyboard character.

Not Text

Enter a single keyboard character which should NOT be triggered on.

Hex

Enter two digits for each hex character.

Not Hex

Enter a hex character which should NOT be triggered on.

Binary

Enter eight bits from softkeys. If the Setup data code is less than eight bits, the most significant bits are ignored.

End Frame

Enter the FCS character (good, bad, abort, don't care).

Start Flag

The cursor is over a start flag, delete this character if desired.

www.valuetronics.com

www.valuetronics.com

5

Triggers

- Introduction
- Trigger Types
- Multiple Triggers
- Triggering On Characters
- Triggering On Errors
- Triggering On Leads
- Triggering On Timers
- Triggering On Softkeys

www.valuetronics.com

Introduction

Triggering is the basis for programmability. Triggers are the events you want the analyzer to look for, such as characters, lead changes, or errors. The capability to select trigger events allows you to control the data that is captured and stored in memory.

Once the analyzer finds the designated event, it will perform any action you specify. It can beep, highlight the event in the buffer, count the event, or measure the time between events.

The HP 4952A stores all line data in its buffer. With triggering, you can selectively analyze only events of interest.

When Statements Define Triggers

Triggers must be defined to be useful. You can define triggers with 'when' statements in monitor or simulate programs. The 'when' statement is used in conjunction with the desired action the trigger will effect.

To load a trigger condition:

- Enter the desired menu to write a program, either the Monitor or Simulate menu.
- Press **When Trig** . As soon as you press **When Trig** , six softkeys appear which provide you with the choice of six types of triggers. You can trigger on DTE or DCE characters, lead changes, errors, timeouts, and your own softkey entries.

Triggers Provide a Reference

When you start or stop an action, you need to tell the analyzer precisely when to start or stop or the measurement may not be the desired data. For example, the START, STOP, BEEP, HIGHLIGHT, and IF statements all need a point of reference to be meaningful.

There are two ways to provide a reference point for measurements:

1. Start of execution. A measurement positioned at the start of a program begins when execution begins. However, this doesn't reference any actual event because execution begins when you press the softkey in the run menu. Usually, you will want to tie measurements to actual events.

www.valuetronics.com

2. Following a trigger. By pointing to an actual event in the data stream, a trigger provides a precise point of reference. Most monitor/simulate commands reference last preceding 'when' statement. If a 'when' occurs earlier in the program, the measurement starts at the time that trigger event was found.

To use a trigger event as a point of reference, action commands must follow 'when' statements. For example, to start a timer when a certain event occurs, place the 'when' statement first.

```
Block x:
   When ...

Block xx:
   Start Timer
```

Caution Place the 'when' statement first or the timer won't be tied to the trigger event and will start at some indeterminate time.

Triggers Stop Execution

A monitor/simulate program does not move out of a block containing 'when' statements until at least one of the 'when' statements in that block is satisfied. Program execution "locks up" (data continues to be acquired) until the trigger event is found. For example, in the following program execution will not move out of block 5 until the analyzer sees either an "abc" on the DTE channel or an "xyz" on the DCE channel:

```
Block 5:
When DTE abc
   then goto Block 7

When DCE xyz
   then goto Block 8
```


www.valuetronics.com

Trigger Types

There are six different types of 'when' trigger statements. You can trigger on DTE or DCE characters, lead changes, errors, timeouts, and your own softkey entries.

Characters

To trigger on characters, specify "DTE" or "DCE" and type in the desired characters.

```
When DTE this is a character string
   then goto Block 2
When DCE this is a character string
   then goto Block 2
```

Leads

To trigger on lead changes, select the desired lead from the softkeys. The appropriate leads appear on the softkeys according to the pod attached.

```
When Lead RTS goes Off
   then goto Block 2
```

Errors

Depending on the setup menu, you can trigger on FCS, BCC, parity or framing errors, or aborted frames.

```
When Error FCS on DTE
   then goto Block 2
```

Timeouts

On the HP 4952A you can specify one of five timers in 1 millisecond increments from 0-65534.

```
When Timer 1 > 100
   then goto Block 2
```

Softkeys

You can trigger on the press of softkeys 3, 4, or 5. The softkeys are numbered from 1-6 from left to right.

```
When Softkey 3
   then goto Block 2
```


www.valuetronics.com

Multiple Triggers

You can combine triggers two ways:

- You can logically 'or' triggers by putting 'when' statements in the same block.
- You can 'sequence' triggers by putting 'when' statements in different blocks.

ORing Triggers (When Statements In the Same Block)

'When' statements in the same block are ORed. The analyzer looks for both events simultaneously; it looks for one event or the other event.

Therefore, to look for two or more triggers simultaneously, put the 'when' statements in the same block. Once a trigger event is found all other triggers in that block are disabled. If two 'when' statements in the same block are satisfied simultaneously, only the one appearing first in the block is recognized.

Note that in the following example, you can substitute 'or' for 'then goto block.'

```
Block 1:
When DTE  abcd
   then goto Block 2
When Error  Parity on DTE
   or
When Error  Parity on DCE
   then goto Block 3
When Lead  RTS goes On
   then goto Block 4
```


www.valuetronics.com

Sequencing Triggers (When Statements In Different Blocks)

In this example, the HP 4952A must find the string "abcd" before it can look for string "efgh". To get to block 5, the analyzer must find both strings.

```
Block 1:
When DTE  abcd
   then goto Block 2

Block 2:
When DTE  efgh
   then goto Block 5
```

Overlapping and Duplicate Triggers

For overlapping or duplicate triggers in the same block, the one found first disables the other triggers.

In the following example, if the data is "yabc", only the first 'when' statement is satisfied. If the data is "ybc" only the second 'when' statement is satisfied. If the data is "yc", only the third 'when' statement is satisfied. The first 'when' statement to be satisfied disables the others.

```
Block 1:
When DTE  abc
   then goto Block 2
When DTE  bc
   then goto Block 3
When DTE  c
   then goto Block 4
```

If the data is "ybc", only the trigger "c" is found.

```
Block 1:
When DTE  c
   then goto Block 2
When DTE  bc
   then goto Block 3
```


www.valuetronics.com

Continuation Of Triggering

When there are multiple trigger strings in a block, some of the triggers may be partially matched at the time one of the triggers is satisfied. If the monitor or simulate program comes back to the same block for the next 'when' statement, these partial matches are remembered when triggering resumes. This is useful when looking for strings on both sides of the line. This example, counts the number of times the string "HELLO" occurs on the DTE and DCE side of the data line.

```
Block 1:
When DTE HELLO
   then goto Block 2
When DCE HELLO
   then goto Block 3

Block 2:
Increment counter 1 by 1
   and then
goto Block 1

    Block 3:
Increment counter 2 by 1
and then
goto Block 1
```

Suppose the word HELLO occurs on both side of the line about the same time. The two line display format might look as follows.

```
DTE  HELLO
DCE  HELLO
```

The HP 4952A begins matching triggers as the data comes in. When the "O" comes in on DTE, the first when statement is matched. At the same time, the first four characters of the second when statement have also been matched. Since the program returns to block 1 for the next set of triggers, the partial match is remembered. When the final character on the DCE hello is received, the match on the second when statement is completed.

www.valuetronics.com

Branching From a Trigger

A 'goto block' command is automatically appended to every 'when' statement (unless you substitute 'or'). Because any command can appear in the designated block, the HP 4952A ca branch to any action as a result of a trigger. For example:

```
Block 2
When lead RTS goes Off
   then goto Block 4
```

When the analyzer sees lead RTS going off, it jumps to block 4 and performs the command in block 4:

```
Block 4
Increment Counter 1 by 1
```

Every time lead RTS goes off, the analyzer increments counter 1. The analyzer is counting the off-going RTS lead changes.

After finding a trigger, you can have the HP 4952A perform any or all of the actions in its repertoire. For example, in block 4 above, you could enter:

```
Block 4
Increment Counter 1 by 1
   and then
Start Disc
   and then
Stop Timer 3
   and then
Highlight
   and then
Beep
   and then
Reset Counter 4
```


www.valuetronics.com

Triggering On Characters

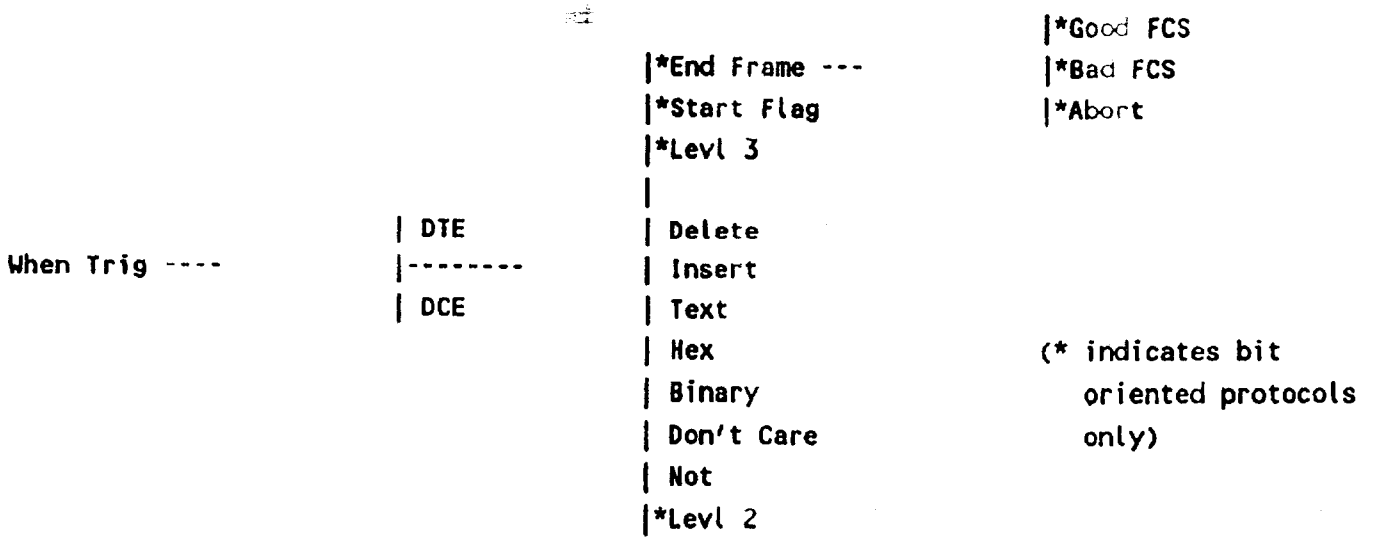

How To Select Characters

Press **When Trig** and then press **DTE** to trigger on DTE characters, or **DCE** to trigger on DCE characters.

Text

Use the **Text** softkey for keyboard characters. The SHIFT key, when pressed with another key, accesses lower case characters.

Control

Control characters, shown in blue on the key caps, are accessed by pressing the CNTL key with another key. Unless you use hex or binary entry, this is the only way you can enter a control character. For example, you cannot type NAK as three letters; you must hold down CNTL and press the NAK key (which is on the same key as "U").

Hex

Press **Hex** to enter characters in hexadecimal. You must enter two hex digits for each character.

Binary

Press **Binary** to enter characters in binary. If the setup menu data code is less than eight bits, enter the correct binary digits, right-justified. The excess bits on the left are disregarded. Parity bits are explicitly entered. You have the choice of entering correct or incorrect parity.

www.valuetronics.com

Don't Care	Press **Don't Care** if you want to trigger on any character. The analyzer then places a boxed "x" in that character location.
Not	Press **Not** before selecting a character if you want to trigger on all characters but the selected character. The HP 4952A then places a bar over each selected character and an asterisk on the "Not" softkey until you leave the "not" mode. To leave the "not" mode, you must press **Not** again.

Hex or Binary Equivalent Of a Character

You can see the binary or hex value of an already entered character by positioning the cursor over that character and pressing **Hex** or **Binary** .

Edit Character Strings

Use the cursor keys or the **Delete** and **Insert** softkeys to edit a string. Press MORE to access softkeys when the cursor is positioned in the string. The **Delete** key is continuous. The **Insert** key is not continuous. It must be pressed for each character inserted.

Setup After Typing a String

If you change the data code or protocol in the setup menu after typing a character string, you must retype the string to avoid triggering on the wrong characters. Characters in one code may not have the same meaning in another code. The HP 4952A shows "?" if the newly selected code is no longer than the old code.

Character Not On the Keyboard

EBCDIC and some other data codes have control characters not on the keyboard. Go to the data code tables in the appendix and find the hexadecimal equivalent. Press **Hex** or **Binary** and enter that character from the keyboard.

Binary and Hex Characters

Use the **Hex** or **Binary** softkeys to enter hexadecimal characters or binary strings. Two hex numbers occupy each character position, requiring two keyboard entries. Hex characters are underlined to differentiate them from text control characters with the same abbreviation. When you press **Binary** , eight binary bits are displayed, allowing you to enter a 1, 0, or don't care in any bit position. Once you move the cursor out of the binary string, it collapses to its hex equivalent but is double underlined to indicate it was entered in binary.

www.valuetronics.com

If the data code selected in the Setup Menu is less than eight bits (e.g., Baudot or Transcode), the appropriate number of higher order bits are disregarded.

Masking Out Characters

Use **Don't Care** to mask out string characters or bits of no interest. "Don't Care" characters are denoted by a boxed "x". If any bit in a binary string is designated as "don't care", the compressed character is denoted by a boxed "?".

Excluding Characters

To trigger on anything but a particular character, press **Not** before selecting the character. Not characters are overlined. The analyzer places a bar over each character that you select from then on, until you leave the not mode by pressing **Not** again.

Flags and Frame Check Characters

Unlike send strings, flags and frame check characters are not automatically appended for 'when' strings. You can enter these characters with the **Start Flag** and **End Frame** . End frame characters (the FCS characters and the last flag) may be useful if you wish to trigger on Bad FCS or Abort characters. Triggers for FCS errors or abort characters can only be programmed when a bit oriented protocol is selected on the setup menu.

Parity

The HP 4952A ignores the parity bit when triggering. You can see this by expanding the specified trigger character in binary when the setup is ASCII 7. The MSB (left) is designated "don't care.". You can explicitly define this character by entering a 1 or 0 in binary to override the setup Menu. Parity error triggers can be entered only when a character oriented protocol is selected in the setup menu.

Level 2 and 3 Assisted Mode

The HP 4952A provides an assisted mode for entering level 2 or level 3 character strings. Softkey prompting allows you to enter the correct bits for frame and packet entry. When the cursor is positioned after a "when DTE/DCE" statement, press **Levl 2** or **Levl 3** to enter the assisted mode.

Note **Levl 2** and **Levl 3** appear if bit oriented protocols are selected.

---

www.valuetronics.com

Triggering On Errors

```
                    | (*FCS DTE)          (**Parity DTE)        (***Parity DTE)
When Error ---      | (*FCS DCE)          (**Parity DCE)        (***Parity DCE)
                    | (*Abort DTE)        (**BCC DTE)           (***BCC DTE)
                    | (*Abort DCE)        (**BCC DCE)           (***BCC DCE)
                                                               (***Framing DTE)

                    (* bit oriented setups)                     (***Framing DCE)
                    (** synchronous character setups)
                    (*** asynchronous character setups)
```

Example: Counting Errors

Assume you have selected BSC as the protocol in the setup menu and you want to count the number of errors that occur over a one minute time period.

```
Block 1:
Start Timer 1

When Timer 1 > 60000
   then goto Block 4
When Error Parity on DTE
   or
When Error Parity on DCE
   or
When Error BCC on DTE
   or
When Error BCC on DCE
   then goto Block 3

Block 3:
Increment Counter 1 by 1
   and then
Goto Block 1

Block 4:
Stop Tests
```


www.valuetronics.com

Triggering On Leads

```
                    | RTS
                    | CTS          On
When Lead ---       | DSR   goes ---
                    | DTR          Off
                    | CD
```

Depending on the pod being used, the appropriate leads automatically appear as softkey choices. For example, with an RS-232C/V.24 pod, the softkey selections are as shown above: RTS, CTS, DSR, DTR, and CD.

The lead trigger is satisfied when the lead goes on or off. Unlike an "if" statement, the lead trigger requires a transition.

Example: Looking For Illegal RTS/CTS Transitions

CTS should never go off before RTS goes off. You could use the following program to check for illegal transitions:

```
Block 1:
When Lead RTS goes Off
   then goto Block 2

Block 2:
If Lead CTS is On
   then goto Block 1
If Lead CTS is Off
   then goto Block 3

Block 3:
Highlight
   and then
Goto Block 1
```


www.valuetronics.com

Triggering On Timers

You can trigger on the timeout of one of the HP 4952's five timers. The analyzer will trigger whenever the timer becomes greater than some specified time in milliseconds. You can select any time from 0 to 65,534 milliseconds. Timer triggers are not counted by the trigger counter. Thus, you can enter as many timer triggers as you want, and not be limited by 63.

Example: Beeping After Two Minutes

Here's how to cause a beep every two minutes:

```
Block 1:
Start Timer 1

When Timer 1  >  60000                    60000 msec = 1 minute.
   then goto Block 2

Block 2:
Increment Counter 1 by 1                  Has counter 1 counted two 60000 msec
                                          intervals?
If Counter 1 > 2
   then goto Block 4

Block 3:
Reset Timer 1                             Timer 1 now measures the second minute.
   and then goto Block 1

Block 4:
Beep                                      Beep and then start over
   and then
Reset Timer 1
   and then
Reset Counter 1
   and then
Goto Block 1
```


www.valuetronics.com

Triggering On Softkeys

```
When Softkey [3,4,5]
```

The HP 4952A can trigger on the press of softkeys 3, 4, and 5. Then, during execution, the analyzer will stop execution and wait for you to press the specified softkey.

"When Softkey" triggers can only be recognized when the program is executing the block in which they appear; they are not global.

"When Softkey" triggers can cause a character trigger in the same block to be missed, if the character trigger is more than one character long. It is a good practice to have only error, lead, or timer triggers in the same block with softkey triggers.

Example: Using a Prompt

You can use the "message" command in combination with the "when softkey" trigger to tell you when to press a softkey during execution.

```
Block 1:
When ...                          When some event occurs press softkey 3.
   then goto Block 2

Block 2:
Message  Press Softkey 3          After pressing softkey 3 turn off the
                                  message.
Block 3:
When Softkey 3
then goto Block 4

Block 4:
Message  _____                    Note that you must actually enter the blanks
                                  with the space bar.
```


www.valuetronics.com

www.valuetronics.com

6

Level 2 and 3 Assisted Mode

- Introduction
- The Level 2 Softkey
- The Level 3 Softkey
- Entering a Level 2 'When' String - An Example
- Entering a Level 3 'When' String - An Example
- Entering a Level 2 'Send' String - An Example
- Entering a Level 3 'Send' String - An Example

www.valuetronics.com

Introduction

The HP 4952A can assist you in entering level 2 and level 3 "send" and "when" strings in the monitor and simulate menus. Without this capability, you would have to refer to bit pattern charts. The setup menu protocol must be bit oriented, e.g., SDLC, HDLC, or X.25 (see Appendix C).

"Send" and "When" Strings

The "send" command is available only in the simulate menu. However, the level 2 and 3 assisted mode is similar for both "when" and "send" strings. Therefore, the discussion of level 2 and 3 assisted mode for both "when" and "send" strings is presented entirely in this chapter to avoid duplication.

Accessing the Levl 2 and Levl 3 Softkeys -- "Send" Statements

1. The setup menu protocol selection must be either SDLC, HDLC, or X.25 .
2. In the simulate menu, press Send .
3. Press MORE until you see the Levl 2 and/or Levl 3 softkeys.

Accessing the Levl 2 and Levl 3 Softkeys -- "When" Statements

1. The setup menu protocol selection must be either SDLC, HDLC, or X.25.
2. Press When Trig , and then DCE or DTE .
3. Press MORE until you see Levl 2 and/or Levl 3 .

www.valuetronics.com

Level 2 Softkeys

Frames are entered by selecting Levl 2 . The address byte is entered followed by the control byte, which determines the frame type. In the control byte you can select type of frame, the poll/final bit (P/F), and the send and receive sequence numbers (N(S) and N(R)). You have the option of entering extended address or control fields depending on the selection in the setup menu.

Level 3 Softkeys

Packets are entered by selecting Levl 3 and then the entry point; either general format identifier (GFI), logical channel number (LCN), or packet type. When GFI is chosen, the Q and D bits and the modulo 8 or 128 can be entered. If "packet type" is chosen, softkeys appear for 17 different packet types.

General Procedure For Level 2 and 3 Assist

As you type in each entry the cursor automatically moves to the next entry position. A prompt appears to tell you the next entry and the previous entry. The prompting message also appears when you manually move the cursor with the cursor keys. For the cursor to move automatically to the next entry position, you must actually type in an entry, even if it is the same as the present entry. Of course, you can always move the left and right cursor keys to the adjacent field.

If you move the cursor too far and drop out of assisted mode, press the Levl 2 or Levl 3 softkeys again. Then move the cursor to the desired field.

www.valuetronics.com

The Levl 2 Softkey

The Levl 2 softkey allows the entry of the Address (Extended if present), Frame bits (I, S, U - frame), Frame type (RR, SABM, etc., if present), Poll/Final bit, N(S) (if present), and N(R) (if present).

The automatic sequence in which the cursor moves in an I-frame is shown below:

1. Address Byte (hex entry -- two digits).
2. Control Byte (binary entry -- eight bits).

   Type of frame: the first bit on the right.

   N(S): the next three bits from the right.

   P(F): the fifth bit from the right.

   N(R): the last three bits from the right.
3. Information Field (one or more characters in text, hex, or binary).

The Address Field

When you press Levl 2 , you are prompted to enter (in hex notation) a value for the "address" field. This prompt is displayed at the bottom of the HP 4952A display. If the right-cursor key is pressed before entering an address, the address defaults to 00 hex.

Extended Addressing

If extended addressing is ON in the setup menu, two softkeys appear when the cursor is in the address field: End Addr and Extend . Pressing Extend sets the least significant bit (LSB) to 0 and then, if necessary, adds a new byte to the address field. Pressing End Addr ends the address field by putting a "1" in the LSB of the byte at the cursor position.

www.valuetronics.com

Frame Type

After entering the address, you are prompted to enter the frame type. If you wish to enter an I-frame, read the following discussion on "I-Frame Fields". Otherwise, read the succeeding discussions on S-frames or U-frames.

I-Frame Fields

When you select I-frame, the least significant bit (right-most) becomes zero, indicating an I-frame type. Then you are prompted to fill three fields. P/F requires one bit; N(R) and N(S) require three bits each.

```
N(R)  |  P/F  |  N(S)  |  0
```

N(S)	The N(S) field takes on values of 0-7 if "extended control" in the setup menu is off; and 0-127 otherwise. If a number greater than the upper limit is entered, N(S) defaults to the upper limit.
P/F	Enter a 1 or 0 in the P/F field.
N(R)	Entry of this field is the same as for the N(S) field. Pressing the left-cursor key leaves the N(R) value unchanged. Entering a value for N(R) will exit you from level 2 entry.

S-Frame Fields

When you select S-frame, the least significant two bits (right-most) are set to 01. Then you are prompted to fill the next three fields from right to left. S-frame "type" is two bits; P/F is one bit; N(R) is three bits.

```
N(R)  |  P/F  |  type  |  01
```

To select an S-frame after entering the address, select **S-frame** . You are then prompted to enter the S-frame type:

RR **RNR** **REJ** **SREJ**

After entering the S-frame type, you are then prompted to enter the P/F field and then the N(R) field. After entering N(R) the HP 4952A exits from the level 2 entry mode.

www.valuetronics.com

U-frame Fields

When you select U-frame, the two least significant bits (right-most) are set to 11, indicating a U-frame. You are then prompted to select the type of U-frame from the following softkeys:

The type of U-frame is defined by two 3-bit fields, which are filled at the same time when you select U-frame type from the softkeys. The default value for the U-frame type is UI. The P/F field requires one bit.

type | P/F | type | 11

After entering P/F the analyzer exits you from the level 2 entry mode.

www.valuetronics.com

The Levl 3 Softkey

The Levl 3 softkey enables you to enter the three fields of the packet header: GFI, LCN, and Packet Type. For most packets, these each take up one byte. Some packet types, however, require a longer packet header. The packet header normally follows the first two bytes of level 2 information, "address" and "control".

```
flag | address | control | GFI | LCN | packet type
```

Of course, if either "extended address" or "extended control" in the setup menu are on, there may be more than two level 2 bytes. Frame type also determines the number of level 2 fields.

Selecting Levl 3 Before Levl 2

You can select Levl 3 without going through Levl 2 first. In this case, zeros are automatically appended for the level 2 bytes in send strings, and "don't cares" in trigger strings. Unless "extended address" or "extended control" in the setup menu are on, the cursor is positioned on the third byte, which is 10 hex. (Flags are shown below by "|", and a good frame check sequence by "GG").

```
| 0000100GG |
```

Three Entry Points -- GFI, LCN, Packet Type

When you press Levl 3, three new softkeys appear, allowing you to enter the packet header from three different points: GFI, LCN, and Packet Type.

If LCN is selected before GFI (missing GFI), the Q and D bits are set to zero, modulo 8 is selected, and the LCGN is set to zero ("don't cares" for trigger strings).

If Packet Type is selected first (missing GFI and LCN), the GFI is set the same as above, and the LCN is also set to zeros ("don't cares" for trigger strings).

www.valuetronics.com

The GFI Field

The GFI byte consists of three fields from left to right: Q, D, MOD, and LCGN. Q and D consist of one bit each; Mod is a 2-bit field; and LCGN is a 4-bit field.

```
Q | D | mod | LCGN
```

The Q Bit

Pressing the GFI softkey prompts you to enter a 1 or 0 for the Q bit. When you enter a value for the Q bit or press the right-cursor key, the D-bit prompt appears.

The D bit

When you enter the D bit or press the right-cursor key, the D prompt appears.

Mod

Press either Mod 8 or Mod 128 to select either 01 or 10 for the two-bit mod field. Entering a value for the mod field or pressing the right-cursor key causes the LCGN prompt to appear. Selecting Mod 128 causes the packet type field to expand to two bytes for some packet types, as described under "Data Packet Fields" below.

The LCGN Field

The LCGN is a four-bit field which you can enter with a decimal value from 0 - 15.

The LCN Field

The LCN field is the next byte to the right of the GFI byte. You can use either decimal or hex entry to select values from 0-255 or 00-FF.

www.valuetronics.com

The Packet-Type Field

When the last digit of the LCN is entered, the "packet-type" field appears, making the following softkeys available:

DATA CALL CALL ACPT RR RNR REJ CLEAR

CLR CNFM RSET RSET CONFM INT INT CNFM

RSTRT RSTRT CNFM DIAGNOST REG REG CNFM

The default packet type is Data. If Mod 128 was chosen in the GFI field, the packet-type field expands to two bytes for some packet types, as described below.

Data Packet Fields

The Packet-Type field for a data packet is like the control field for an I-frame. Entry of the P(S), M, and P(R) is just like the entry of N(S), P/F, and N(R) fields. When you select Data packet, the least significant bit (right-most) becomes zero, indicating a data type packet. Then you are prompted to fill three fields from right to left. P(S) and P(R) each require three bits; M requires one bit.

P(R) | M | P(S) | 0

If you selected Mod 128 in the GFI, the packet-type field consists of two bytes rather than one. P(S) and P(R) each take up seven bits:

Other Packet Types

RR, REJ, and RNR packet types have a P(R) field. All other packet types do not have any such fields except Data.

www.valuetronics.com

Entering a Level 2 "When" String -- An Example

The following example describes the procedure for entering a level 2 "when" string. The setup protocol must be either SDLC, HDLC, or X.25 to see the **Levl 2** softkey. If you don't see the indicated softkey, press MORE until you do. In the following example flags are shown as "|".

1. Set protocol to SDLC in the Setup menu.

2. In the monitor or simulate menu, press **When Trig** and then **DTE** or **DCE**. Let's select **DTE**.

```
When DTE
   then goto Block 2
```

3. Press **Levl 2**. The start flag and the address field (00) now appear:

```
When DTE |00
   then goto Block 2
```

4. Type the address in hexadecimal. Let's type "4A". The control field now appears in binary unless extended address is ON; and the softkeys prompt you to select the type of frame, which is determined by the least significant one or two bits (on the right).

```
When DTE |4A00000000
   then goto Block 2
```

5. Let's select **I-frame**. The least significant bit (on the right) remains 0. The cursor now moves to the left into the three-bit N(S) field. Enter an N(S) of 5.

```
When DTE |4A00001010
   then goto Block 2
```

6. The cursor now moves to the left into the one-bit P/F field. Let's enter a P/F of 0. Note that even though the P/F bit is already 0, you must still enter 0 to automatically move the cursor into the next field. Of course, you can always use the cursor keys.

```
When DTE |4A00001010
   then goto Block 2
```


www.valuetronics.com

7. The cursor now moves into the three-bit N(R) field. Let's enter an N(R) of 7.

```
When DTE |4A11101010
   then goto Block 2
```

As soon as you make the entry the eight-bit control field collapses to its hex equivalent to save space:

```
When DTE |4AEA
   then goto Block 2
```

8. The cursor now moves into the I-field, prompting you to enter text.

www.valuetronics.com

Entering a Level 3 "When" String -- An Example

The following example illustrates level 3 assisted entry for a "when" string. If you don't see the indicated softkey, press MORE until you do. The setup protocol must be either SDLC, HDLC, or X.25 to see the **Levl 3** softkey. In the following example, "|" indicates flags, "GG" indicates a good frame check sequence, "don't care" characters are shown as "x", and characters with no hex equivalent as "?".

1. Set the protocol to SDLC in the Setup menu.

2. In the monitor menu or simulate menu, press **When Trig** and then **DTE** .

```
When DTE
```

3. Press **Levl 3** . The flag is automatically entered and the next two bytes, address and control, are shown as "don't care".

```
When DTE |x?
```

4. The first byte (level 2) is indicated by "x", which means "don't care". The cursor is positioned on the third byte, where level 3 entry begins. This byte is shown as unknown (?) because some of its bits are "don't cares".

   At any point you can change the first two bytes by moving the cursor to the left and pressing **Level 2** .

5. When the cursor is positioned on the third byte (?), three softkeys appear: **GFI** , **LCN** , and **Packet Type** . Press **GFI** ; the third byte now expands to eight binary bits, with the last four bits being "don't cares". The GFI consists of the first four bits on the left. The cursor now prompts you to enter the Q bit, which is the first bit on the left.

```
When DTE |xx0001xxxx
```

6. Now enter the Q and D bits. Press **0** to enter a Q bit of 0. The cursor now moves one bit to the right, prompting you to enter a D bit. Press the **1** softkey to enter a D bit of 1.

```
When DTE |xx0101xxxx
```


www.valuetronics.com

7. The cursor now moves into the modulo 8 or 128 field, which consists of the third and fourth bits from the left. Press **Mod 8**, which is 01.

```
When DTE |xx0101xxxx
```

8. The cursor now moves into the last four bits, which is the LCGN field. You can enter a maximum of 15 decimal; if you type a number higher than 15, the entry defaults to 15. Type 09 (note that you must enter leading 0's to have the cursor move automatically). The third byte collapses to its hex equivalent, and the cursor moves to the fourth byte.

```
When DTE |xx01011001  becomes  When DTE |xx59|00000000
```

9. The fourth byte is the LCN. You can enter a maximum of 255 decimal; if you type a number higher than 255, the entry defaults to 255. Type 045 or select hex entry and enter 2D (note that you must enter leading 0's for the cursor to move automatically). The fourth byte collapses to its hex equivalent, and the cursor moves to the fifth byte.

```
When DTE |xx5900101101  becomes  When DTE |xx592D|00000000
```

10. The fifth byte is the packet-type identifier. The cursor moves to the least significant bit (most right). A least significant bit of 0 indicates a "data" packet. Let's select a data packet type by pressing **DATA**. The least significant bit remains 0.

11. The cursor now moves to the left into the three-bit P(S) field. Type 7.

```
When DTE |xx592D|00001110
```

12. The cursor moves to the M bit, which is the fifth bit from the right. Press **Don't Care**.

```
When DTE |xx592D|000x1110
```

13. The cursor moves to the three-bit P(R) field, which is the last three bits from the left. Type 5. The fifth byte collapses to "?" because there is no hex equivalent.

```
When DTE |xx592D|101x1110  becomes  When DTE |xx592D?
```

14. The cursor moves into the text field, allowing you to type any text you wish. Type "THIS IS TEXT".

```
When DTE |xx592D?THIS IS TEXT
```


www.valuetronics.com

15. Press **End Frame**, and then **Good FCS**.

```
When DTE |xx592D?THIS IS TEXT GG|
   then goto Block 2
```

The trigger counter at the bottom of the display should indicate "42 triggers left". Therefore, the entire string used up 63 - 42, or 21 triggers.

Note You may not have needed to trigger on the complete string. You can trigger on any character or characters in the string. For example, if you wish to trigger only on packets which have an LCN of 2D, you can enter the following:

```
When DTE |xxxx2D
```

This tells the analyzer to look for a 2D in the fifth byte after any start flag.

www.valuetronics.com

Entering a Level 2 "Send" String -- An Example

The "send" command is available in the simulate menu only (see Chapter 7, "Simulate Menu". The discussion of level 2 and 3 assisted mode for both "when" and "send" strings is presented entirely in this chapter to avoid duplication.

The following example illustrates level 2 assisted entry for a "send" string. The setup protocol must be either SDLC, HDLC, or X.25 to see the Levl 2 softkey.

In this example, "|" and "GG" indicate flags and FCS.

1. Set the protocol to SDLC in the Setup menu.

2. Press Send in the simulate menu, and then Levl 2 . The string should look like this.

   Send |0_0GG|

3. The cursor is sitting over the 00, and the message tells you to enter a hexadecimal address from the keyboard.

4. Type 01 for the address. The cursor now moves over to the control byte. The string looks like this:

   |$0_1$00000000GG|

5. The cursor is on the LSB, the right-most bit of the control byte, and the softkeys prompt you to select either I-frame , S-frame , or U-frame . select I-frame , which is denoted by a "0" in the LSB.

6. The cursor now moves to the left, prompting you to enter the N(S) number, which takes up the next three bits. You may enter any number from 0 to 7. Let's select "7". The string should now look like this:

   |$0_1$00001110GG|

7. The cursor now moves to the fifth bit from the right, prompting you to enter the P/F bit. Let's enter "0". Press the 0 softkey.

www.valuetronics.com

8. The cursor now moves to the sixth bit from the right, prompting you to enter the N(R) number, which takes up the last three bits. You may enter any number from 0 to 7. Let's select "5":

|$0_1$10101110GG|

9. As soon as you have selected the last control bit, the control byte is shown in hexadecimal, rather than binary:

|0_1AEGG|

10. The cursor is now positioned to the right of the control byte, prompting you to type in the information field. Let's type the message "THIS IS DATA". The string should look like this:

|0_1AE THIS IS DATA GG|

11. Press **End Frame** or cursor down to end the frame.

www.valuetronics.com

Entering a Level 3 "Send" String -- An Example

The "send" command is available only in the simulate menu. The discussion of level 2 and 3 assisted mode for both "when" and "send" strings is presented entirely in this chapter to avoid duplication.

The following procedure illustrates level 3 entry for a "send" string. The setup protocol must be either SDLC, HDLC, or X.25 to see the Levl 2 and Levl 3 softkeys.

In the following description, "|" indicates a flag and "GG" indicates a good frame check sequence.

1. Set the protocol to SDLC in the Setup menu.

2. Press Send in the simulate menu. Press MORE until you see the Levl 3 softkey. Press Levl 3 ; the string should look like this.

   |$0_0$$0_0$$1_0$GG|

   Note that the first two bytes are both 0_0. These are the level 2 address and control bytes, which default to 0. You can move the cursor back and change them if you wish. When you move the cursor back to these bytes, you drop out of the level 3 assisted mode; and you can press Levl 2 for assistance in entering these bytes.

   For now, make sure you are in the level 3 mode and the cursor is positioned over the right-most byte, 1_0. When you press Levl 3 you will see the following three softkeys:

   GFI LCN Packet Type

3. Press GFI . The right-hand byte is expanded to its binary components:

   |$0_0$$0_0$00010000GG|

   The cursor is sitting over the left-most bit, prompting you to enter the Q bit. Let's enter "0". Press the 0 softkey.

4. The cursor now moves to the second bit from the left, prompting you to enter the D bit. Let's enter "1". Press the 1 softkey.

www.valuetronics.com

5. The cursor now moves to the two-bit "mod" field. Mod 8 is 01 binary, and mod 128 is 10 binary. Press **Mod 8** . The string should now look like this:

```
|0000010100000GG|
```

6. The cursor now moves to most right-hand bit, prompting you to type in a LCGN. Since this is as four-bit field, you can enter any number from 0 to 15. Let's enter "9". Type 09 (you must enter the "0" before the "9". The GFI field collapses to 59 hex, and the next byte appears, prompting you to enter the LCN:

```
|0005900000000GG|
```

7. You can enter any three decimal digits or any two hexadecimal digits for the eight-bit LCN field. If you enter a number greater than 255, the entry defaults to 255. Type 155 decimal. The LCN field collapses to 9B hex, and the next byte appears, prompting you to enter the packet type:

```
|00059B00000000GG|
```

8. Enter **Data** for the packet type. The right-most bit remains 0 and the prompt moves left to the three-bit P(S) field. Enter 7 for the P(S):

```
|00059B00001110GG|
```

9. The cursor moves to the fifth bit from the right, prompting you to enter the M bit. Enter 0 for the M bit. The prompt now moves to the last three bits on the left, which is the P(R) field. Enter 5 for the P(R):

```
|00059B10101110GG|
```

10. The packet-type byte collapses to its hex equivalent, AE, and the cursor moves to the data field, prompting you to enter text:

```
|00059BAE  GG|
```


www.valuetronics.com

7

Simulating

- Introduction
- Device Selection
- The Simulate Menu
- Simulate Softkeys
- Compatibility With Other HP Protocol Analyzers
- Simulate Functions
- Send Characters
- Controlling Interface Leads
- Delaying Output
- Simulate Error Messages
- Simulate Status Messages

www.valuetronics.com

Introduction

The HP 4952A can be placed in a line and substitute for an active device. In this mode the analyzer becomes an integral part of the link and actually drives leads.

The simulation menu is similar in appearance to the monitor menu because you must program the analyzer to act as a device in the link. The programs are similar but the function is much different.

Connect the HP 4952A For Simulating

1. Turn off the analyzer and connect the pod.

2. Disconnect the DTE or DCE device to be simulated.

3. Use the Y-cable supplied with the pod to connect the HP 4952A in place of the device to be simulated. You need only one branch of the Y-cable as shown below.

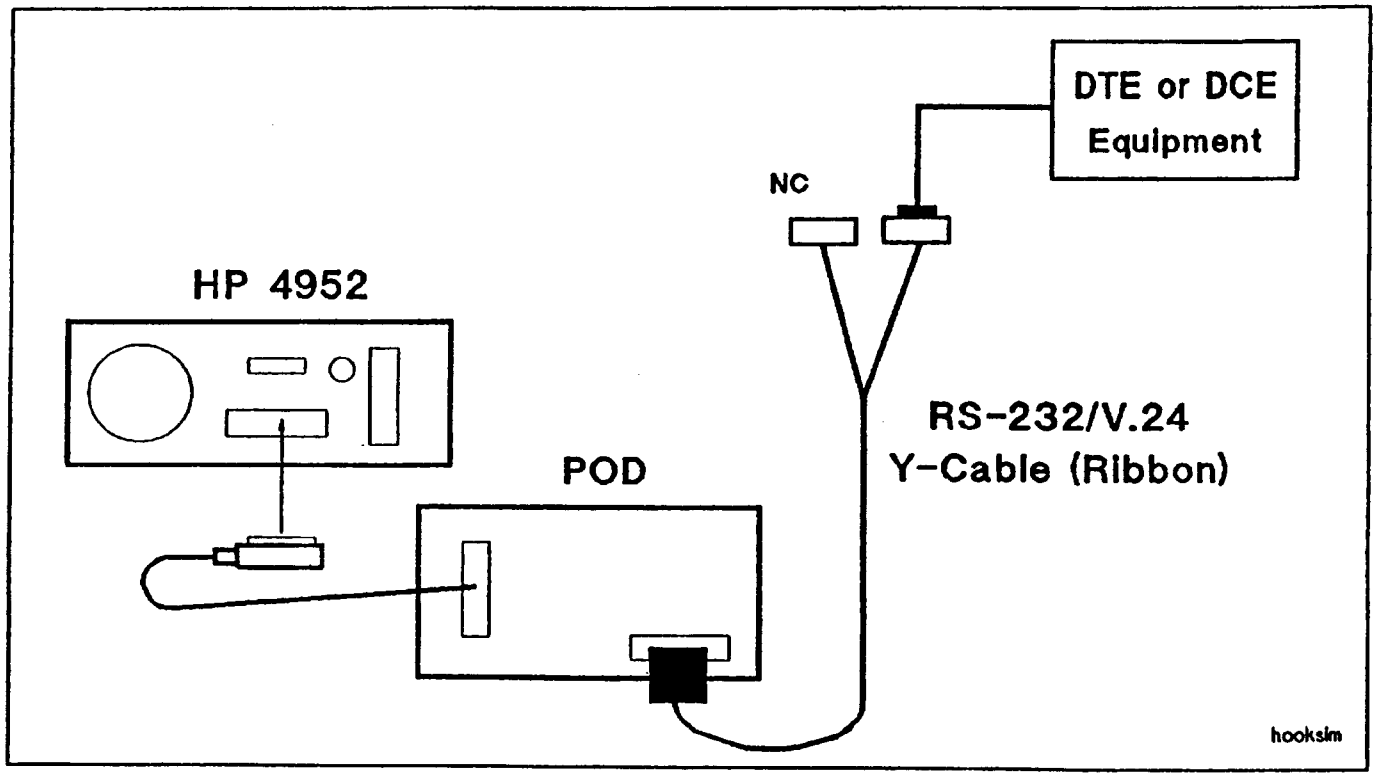

Figure 7-1. Hookup for Simulating

www.valuetronics.com

Device Selection

The first selection, before any programming can begin, tells the analyzer what device is being substituted. The selections are DTE or DCE and are selected with softkeys.

This selection is very important because it determines the interface pins the analyzer uses for sending and receiving. It also determines which clocks are supplied and expected by the analyzer. For example, on an RS-232C interface, ETC is provided when simulating a DTE; TC and RC are provided when simulating a DCE.

Setup for Simulating

If parameters such as protocol or bit rate are wrong, the other devices on the line may not respond. Use the setup menu to configure the analyzer to the link. Setup should be performed before you make entries in the simulate menu, otherwise, some simulate entries may be incorrect.

Lead Handshaking

The other devices on the link may expect leads to turn on and off at the correct times. For example, on some RS-232C interfaces the DTE raises RTS and waits for CTS from the DCE. Leads are turned on and off by 'set lead' statements in the simulate program.

www.valuetronics.com

The Simulate Menu

The simulate menu is used for telling the analyzer how to simulate. After entering a simulate program in the simulate menu, you must go to the run menu to execute the program.

The simulate menu is similar to the monitor menu, with the addition of three softkeys: **Send**, **Set Lead**, and **Wait**. Simulation requires the sending of data and the setting of leads, and this is done with softkey commands in the simulate menu.

Table 6-1. The Simulate Menu

```
Simulate DTE/DCE

Block 1

Start          Stop          Inc     If      When    Send    [MORE]
                             Ctr

High-          Beep          Reset   Goto    Set     Wait    [MORE]
Light                                Blk     Lead

Gosub          Re-           Move                    Mes-    [MORE]
Block          turn          Crsr                    sages

Insert                       Delete                  Print   [MORE]
Line      Block        Line  Block   Prg             Prog
```


www.valuetronics.com

Simulate Softkeys

Most of the softkeys in the monitor and simulate menus are the same. All of the first-level softkey commands that appear in the monitor and simulate menus are summarized below in the order they appear. Softkeys available only in the simulate menu are shown with an asterisk.

Start

The start softkey is available to start the Display , Disc , Timer . 'Start' and 'Stop' commands should be tied to the start of execution or the last preceding trigger.

Stop

The stop softkey is available to stop the Display , Disc , Timer . 'Start' and 'Stop' commands should be tied to the start of execution or the last preceding trigger.

Inc Ctr

'Increment Counter' uses one of the five counters to count events.

If

An 'If Counter' causes a program branch according to the condition of a counter. An 'If Lead' causes a branch according to the condition of a lead at the time of the last trigger.

When Trig

'When Trig' is the only statement that defines a trigger event. The analyzer can look for any event and then branch to a designated action. Triggers are the only way to provide a reference point in the data stream.

* Send

The 'Send' command tells the analyzer to send characters. You can enter the characters in text, hexadecimal, or binary. Level 2 or 3 assisted mode makes entry of frame and packet headers available.

www.valuetronics.com

Highlight

Marks trigger events in the buffer.

Beep

Audibly notifies you when the last preceding trigger is found.

Reset

Resets to zero and stops a specified `Timer` or `Counter` .

Goto Blk

Effects a branch to another block.

* Set Lead

Sets interface leads on or off.

* Wait

'Wait' statements are used to delay 'Send' or 'Set Lead' commands by a specified number of milliseconds.

Message

'Message' statements are used for entering comments in a program.

Gosub Block

The 'Gosub Block' command causes a jump to a subroutine that ends in a 'return' statement. Without a 'return' statement 'Gosub Block' acts like a 'Goto Block' command.

www.valuetronics.com

Return

A command that terminates a subroutine and return to the command immediately following the 'Gosub Block' statement.

Insert Line

Inserts a new line when the cursor is at the beginning of a line.

Insert Block

Inserts a new block when the cursor is at the beginning of a line.

Delete Line

Deletes a line when the cursor is at the beginning of a line.

Delete Block

Deletes a block when the cursor is at the beginning of a line.

Delete Prg

Deletes the entire simulate program when the cursor is at the beginning of a line.

Print Prog

Prints the simulate program if an ASCII printer is connected.

Move Crsr

Allows the cursor to be positioned at the start of a block.

www.valuetronics.com

Compatibility With Other HP Protocol Analyzers

The following Simulate functions are unique to the HP 4952A and are not supported on other HP protocol analyzers.

Message statements
Gosub Block and Return
When triggers
Inc Cntr by n

If you load an HP 4952A Simulate menu or program into another HP protocol analyzer, either from disc or remote, the functions listed above will be changed by the other analyzer into a different function.

Before you use an HP 4952A Simulate menu or program another HP protocol analyzer, verify the menu program to avoid any discrepancies.

Caution Remove all 'Message' statements before transferring programs or menus from an HP 4952A to another non-4952A protocol analyzer.

www.valuetronics.com

Simulate Functions -- Send , Set Lead , Wait

In addition to the regular monitoring commands, the simulate menu contains three other statements -- Send , Set Lead , and Wait .

The following three functions are described in more detail on the following pages.

Sending Characters -- Send

To simulate a DTE or DCE, you must be able to send characters to the other devices on the link. Send allows you to enter characters to be sent by the analyzer.

Controlling the Interface -- Set Lead

A simulating device must be able to change the leads on the interface. The HP 4952A lets you turn leads on and off with Set Lead . Of course, the analyzer can only drive the leads controlled by the device it is simulating.

Delaying Output -- Wait

Sometimes it is necessary to delay sending or setting leads by a certain number of milliseconds. The Wait can be used before 'send' or 'set lead' statements.

www.valuetronics.com

Send Characters -- Send

Using Send, you can simulate a DTE or DCE by sending any bit or character sequence in any of the codes supported by the HP 4952A. Maximum length for each string is 251 characters.

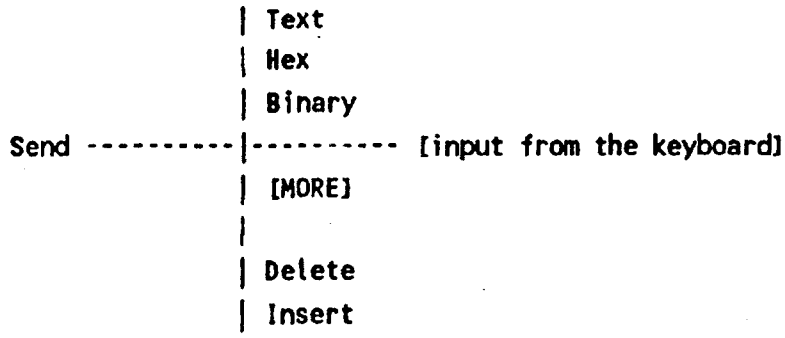

Handshaking Requirements

The receiving equipment may require a handshaking sequence before accepting the data you are sending.

Note Determine which interface leads must be set on or off before sending data. Otherwise, the receiving equipment may not accept the data.

How To Select Send Characters

Text enters characters in the data code selected in the setup menu. The SHIFT key accesses lower-case characters and the CNTL key accesses control characters. You can see the binary or hex value of any entered character by positioning the cursor over that character and pressing Hex or Binary.

www.valuetronics.com

Control Characters

Control characters, such as SYN appear in blue at the top of the keys. To enter sync, or other control characters, press CNTL while pressing the key with the desired control character.

Note You must use the CNTL key to enter control characters. For example, you cannot just type "SYN". Of course, you can always enter the hex or binary equivalent.

You must explicitly enter sync characters at the beginning of "send" strings for character oriented protocols. Otherwise, the receiving device cannot synchronize to the message. For example:

```
Send SYSY this is a message
```

Note In character oriented protocols you must explicitly enter sync characters such as SYSY. Otherwise, the receiving device does not recognize the message.

When a Character Is Not On the Keyboard

EBCDIC and some other data codes have control characters which are not on the keyboard. Go to the data code tables in the appendix to find the hexadecimal equivalent. Press **Hex** or **Binary** and enter that character from the keyboard.

www.valuetronics.com

Binary and Hex Characters

Use either **Hex** or **Binary** to enter hexadecimal characters or binary strings. Two numbe occupy each hex character position, requiring two keyboard entries. When you press **Binary** eight binary bits are displayed, this lets you enter a 1 or 0 in any bit position from the softkey: Once you move the cursor out of the binary string, it collapses to its hex equivalent.

How To Edit Character Strings

Use **Delete** and **Insert** to edit a string. Press MORE to access these softkeys when the cursor is positioned in the string.

Sending Idles

The HP 4952A can be set up to capture data and idles monitored on a line. When simulating, the line will not display idles, or store idles in the buffer, unless they are explicitly placed in the send string.

Block Check Characters (BCC)

In character oriented protocols, the HP 4952A automatically appends the correct block chec character to "send" strings. You can see this character at run-time or in the buffer after a rur In "char" protocol setup you can select the characters on which error checking is to start and stop.

In the setup menu, the "start on" selection begins error checking following the designated character. The "stop on" character selection includes the designated character in the error check.

The BCC is automatically generated only for the first required BCC. The BCC for subsequer blocks of text or data must be entered manually into the string.

www.valuetronics.com

Flags and Frame Check Characters

Flags and frame check sequence (FCS) characters are automatically added whenever a bit oriented protocol (HDLC, SDLC, X.25) is selected in the setup menu. The HP 4952A does not show you the actual frame check character.

For received data, GG, BB, or AA are displayed to indicate 'good FCS', 'bad FCS', or 'abort'. For 'send' strings, good FCS characters (GG) are automatically selected; but you may choose bad FCS (BB) characters or abort (AA) characters either by explicitly entering the frame check characters, or by using **End Frame** .

Flags and frame check characters disappear if you change the setup to a character oriented protocol and again move the cursor into the string.

Parity Bits

In **Text** mode the current setup determines the parity bit. In **Hex** or **Binary** mode the current setup also determines the parity for 8-bit data codes (e.g., ASCII 8, EBCDIC). For data codes less than 8-bits (e.g., ASCII 7, Baudot), the parity bit is determined by the hex or binary entry.

For example, assume the setup is ASCII 7 with odd parity. In the **Text** mode, if you enter an "E" in the send string, the binary code sent will be 01000101. The parity is 0 (left-most bit). To change the parity bit to 1, use **Binary** or **Hex** and enter 11000101 or c_5 .

Note The run-time and examine data displays ignore the parity bit on transmitted data. In the above example, the run-time and examine data displays show an "E" even when you send c_5. However, parity errors are detected on received data. When receiving a c_5 with odd parity, the c_5 appears as a blinking "E" in both displays and the parity bit indicated in the examine data menu is 1.

---

www.valuetronics.com

Zero Bit Insertion

In bit oriented protocols, the HP 4952A automatically inserts a 0 (invisible to the user) after five consecutive 1's before transmitting non-flag characters (invisible to the user). When receiving, it automatically removes any 0 bits inserted by the transmitter. Zero Insertion is not done in the case of char protocol setup.

Changing the Setup After Typing the String

If the data code or protocol are changed in the Setup Menu after typing a character string, you must retype the string. Characters in one code may not have the same meaning in another code. This is especially important for sync characters, which when typed as Sy usually mean different things in different data codes, and can cause incorrect sync-up of the receive channel.

Level 2 and 3 Assisted Mode

Just as with 'when' strings, Levl 2 and Levl 3 provide an assisted mode for entering level 2 and 3 information. Chapter 6 provides detailed information on level 2 and 3 assisted mode.

www.valuetronics.com

Using Timers With Send

Timers measure intervals between trigger events. Each line event is time stamped as it is placed in the buffer. Timers are always referenced to the last preceding 'when' statement. The following example shows the correct way to measure the time it takes to send the string:

```
Block 1:
Send  SySySx abcdefghijk Ex
   and then goto Block 2

Block 2:
When  DTE  a
   then goto Block 3

Block 3:
Start Timer 1

When  DTE  k
   then goto Block 4

Block 4:
Stop Timer 1
```

The next example is incorrect because the start of the timer is not tied to a preceding "when" trigger statement. The timer starts when execution starts.

```
Block 1:
Start Timer 1
   and then
Send SySySx abcdefghijk Ex
   and then
Stop Timer 1
```


www.valuetronics.com

Controlling Interface Leads -- Set Lead

The 'set lead' command turns on or off a selected interface lead. The HP 4952A always knows which pod is attached and displays the correct softkeys.

When Are Leads On or Off?

With a RS-232C/V.24 interface, a lead is "on" when the voltage is high; it is "off" when the voltage is low. This may be different for other interfaces.

Which Leads Can Be Controlled?

When simulating a DTE, you cannot control DCE leads, and vice vesa; only the appropriate lead softkeys are displayed, as shown below (* indicates RS 449-leads). See Chapter 15 "Interface Pods" for more information.

	DTE		DCE
Set Lead	| RTS (*RS) | DTR (*TR)	Set Lead	| CTS (*CS) | DSR (*RR) | CD (*DM)

HP 4952A Lead Status During Simulation

At the beginning of simulate execution, the HP 4952A sets all the leads it can drive off. You must use "set lead" statements in the simulate menu to perform handshaking with the receiving device.

Note Determine which interface leads must be set on or off before sending data. Otherwise, the receiving equipment may not accept the data.

www.valuetronics.com

HP 4952A Lead Status When Not Simulating

Lead status is independent of the HP 4952A, except when it is simulating. Remember this when you use 'if lead' statement in a monitor program.

Example: Simulating a DTE

Because the HP 4952A always sets the appropriate DTE or DCE leads off at the beginning of the simulation run, 'set lead' statements are needed to turn the appropriate leads back on before sending data. If this is not done, the receiving device might not accept data from the HP 4952A. You must know the handshaking requirements on your system in order to simulate correctly.

```
Simulate DTE

Block 1:
Set Lead  DTR  On
   and then
Wait 1000
   and then
Set Lead  RTS  On
If Lead CTS is On then goto Block 2
When Lead  CTS goes On
   then goto Block 2

Block 2:
Send  abcd
   and then
Set Lead  RTS  Off
```


www.valuetronics.com

Delaying Output -- Wait

Wait Controls Output Only

Note The 'wait' statement controls output only.

Use **Wait** only with **Send** and **Set Lead** statements. **Wait** has no effect on program flow or timers. If you need to insert program pauses, use timers or counters.

Note The shortest 'wait' possible is 3 milliseconds. Thus, 'waits' of 1 or 2 milliseconds are actually 3 milliseconds.

Delaying Characters or Leads

The 'wait' command can be set in 1 millisecond increments to cause delays of up to 65,535 milliseconds. In combination with counters, very long delays can be set up. The following example repeatedly sends a string of numbers and then waits 50 milliseconds.

```
Block 1:
Send 1234567
   and then
Wait 50 msec
   and then goto Block 1
```


www.valuetronics.com

Simulate Error Messages

Max Length

This message appears if you attempt to specify more than 255 characters in a single string.

Max Strings

This message appears if monitor and simulate programs combined contain strings totalling more than 1750 characters.

Menu Full

The monitor and simulate menus combined contain 143 program statements.

Invalid Mon/Sim Menu

This may occur if you enter 'When DTE/DCE' without completing the trigger branching instruction. This error can also occur if you leave a 'message' or 'send' statement empty. You must enter something into the message field, even if it is only blanks.

No File; Run Aborted

The menu requesting the run-time disc data file was exited prior to being executed.

File Already Exists

The menu requesting the run-time disc data file was given the name of a file already created.

DLC Error

HP 4952A hardware problem. Contact HP for service.

www.valuetronics.com

Simulate Status Messages

Text

Enter a single keyboard character.

Not Text

Enter a single keyboard character which should NOT be triggered on.

Hex

Enter two digits for each hex character.

Not Hex

Enter a hex character which should NOT be triggered on.

Binary

Enter eight bits from softkeys. If the Setup data code is less than eight bits, the most significant bits are ignored.

End Frame

Enter the FCS character (good, bad, abort, don't care).

Start Flag

The cursor is over a start flag, delete this character if desired.

www.valuetronics.com

8

The Run Menu

- Introduction
- Run Menu Softkeys
- Displaying Data
- Run-Time Messages

www.valuetronics.com

Simulate

To simulate, perform the correct hookup and setup, ensure that lead handshaking is correct in the simulate menu (see Chapter 7) and press **Simulate** in the run menu to execute.

Data Filter

The data filter enables you to use the buffer more efficiently and eliminate characters of no interest.

Data filtering affects only the data being acquired, not data already in the buffer. When any form of data filtering is in effect, the following message appears continuously in the run menu: 'DATA FILTER ACTIVE'.

If an asynchronous protocol is selected, a 'character counting inactive' message is displayed since flags or syncs are required for the skip/capture portion of the data filter.

The Data Filter Setup Menu

The data filter setup menu is shown below. Entry options are shown in brackets.

```
Data Filter                                    [ On ] [ Off ]
Capture Data On                                [ DCE Only ]
                                               [ DTE Only ]
                                               [ DCE & DTE ]
                                               [ Errs Only ]
X21 Idles  (*,SY, BL)                          [ On ] [Off]
      (Only appears when X21 is selected)
Timing Information                             [ On ] [ Off ]
      (not available with X21)
Lead Changes Turned                            [ On ] [ Off ]
      (not available with X21)
[ Skip ]   [ Capture ]  the First  [ use keyboard ]  Chars
```


www.valuetronics.com

Data Filter Definitions

Data Filter On/Off

With this selection you can turn the entire data filter off, regardless of any other selections.

Capture Data On

The 'Capture Data On' selection determines whether you capture data on the DTE, DCE, or both, or whether you capture only errors on either channel. Filtering does not turn off errors, even on a channel that is turned off. If you are capturing data on DTE only, errors will be seen on the DCE channel. Error conditions are always stored in the buffer.

X21 Idles [Off] will filter out X21 idle characters to use the buffer more efficiently.

Timing Information (Not available when X21 is selected)

Normally, a time stamp is stored periodically in the buffer. By turning off 'Timing Information' you eliminate the time stamps and store more characters. Of course, you can't make timing measurements in the monitor or examine data menus. When 'timing information' is turned off, you cannot store lead changes.

If you try to make timing measurements on data that had timing information turned off, erroneous results will occur. If you store data to disc that had timing information turned off, use the comment field to indicate this condition.

Note To measure time in the monitor, simulate, examine data menus, you must have selected 'timing information' On in the data filter. Also, if you want to trigger on an event in the monitor or simulate menu, then you must not have filtered that event out in the data filter.

---

www.valuetronics.com

Lead Changes (Not available when X21 is selected)

You have more room for characters if lead changes are turned off. This is useful on lines where the leads are changing rapidly or on noisy lines. You can make more efficient use of the buffer by turning off 'lead changes.'

If the data and state display format was selected when 'lead changes' was turned off, the two-line display is automatically selected.

Skip the First N Chars

'Skip the first N chars' tells the analyzer not to store the first 'N' characters of frames or blocks, regardless of their size. The value for 'N' can be 0 to 255. Skip is for synchronous protocols only.

Frames or blocks that are less than N+1 (not including the FCS or BCC) are not stored. You can select 'N' so that all frames or blocks without information above a certain protocol level are suppressed. For example, setting N = 2 when the protocol is X.25 filters out frames containing only level 2 information. When frames are longer than 'N' bytes, end flags are stored but not start flags.

Capture the First N Chars

'Capture the first N chars' tells the analyzer to store only the first 'N' characters of a frame or block. The value for 'N' can be 1 to 255. Error information on all frames is always stored. Capture is for synchronous protocols only.

BERT

To execute BERT tests, perform the correct hookup and setup, and then press **BERT** in the run menu to execute (see Chapter 10, "The BERT Menu").

www.valuetronics.com

Displaying Data

Use the 'Display' field in the setup menu to change the display format. The six display formats are:

DTE	DTE data only. Displayed in regular video.
DCE	DCE data only. Displayed in inverse video.
Two Line	DTE over DCE. DCE data is displayed in inverse video.
Data & State	DTE over DCE data, and timing diagrams of four interface leads.
Packet	Decodes X.25 level 3 information.
Frame	Decodes the frames of bit-oriented protocols.

Full Duplex and Half Duplex Data

On half duplex data, the HP 4952A displays complete DTE messages alternating with complete DCE messages. On full duplex data, the HP 4952A displays the individual characters in the order which corresponds closely to the timing order in which they are received. To see the actual order, use cursor timing in the examine data menu.

Blinking Characters

Blinking characters indicate failed error checks: BCC, FCS, parity, or framing errors resulting from incorrect setup or loss of synchronization.

www.valuetronics.com

Run-Time Messages

Messages shown at the bottom of the display during run-time are:

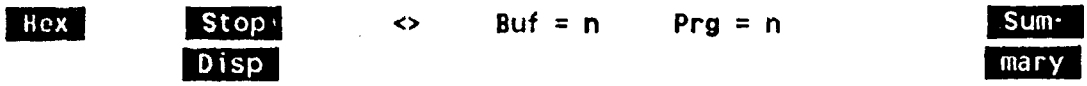

Hex/Text

Pressing **Hex** converts all subsequent displayed data to hex format. The softkey label then changes to **Text** for changing the display back to the current data code.

Stop Display/Start Display

The **Stop Disp** alternates with **Start Disp**. **Stop Disp** freezes the display, and **Start Disp** causes the most recent incoming data to be displayed. These do not affect the run, but the continuity of the run-time display may be lost. This softkey works identically to the 'start/stop display' statements in the monitor and simulate menus.

Buf = n

Message indicating which 2 kbyte block of memory (1 to 16) is being displayed. When memory wraparound occurs, the next 2 kbyte block to be loaded becomes Block 1. When viewing the buffer after run-time with examine data, the oldest data becomes Block 1. In the examine data menu, block numbers may go as high as 304 if the buffer data has been loaded from disc (or 384 if loaded from the extended capture buffer).

Prg = n

Message indicating which monitor or simulate menu block is currently executing. This can tell you when the program is locked up or when the analyzer is looking for a trigger event. It may flash very rapidly.

Summary/Data Display

These alternate to show either the data display or the setup summary. Press **Summary** without affecting the run, to review the current setup and observe the counters and timers. The summary tracks the current setup menu. Press **Data Disp** to return to the data screen.

The timers and counters display is updated at least twice per second.

www.valuetronics.com

Exploding Diamond (< >)

Symbol indicating data is being processed.

No Pod Attached

An interface pod must be attached in order to run BERT, Auto Configure, Simulation, and Monitor on-line. No pod is necessary to Monitor the Buffer.

Buffer Overflow

Data has filled the buffer (16 blocks or optionally 384 blocks) and will begin to overwrite data that has not yet been processed.

Receiver Overrun

The hardware capability to process serial input is being exceeded.

Invalid Monitor/Simulate Menu

This occurs because of incomplete 'when', 'if', 'send' or 'message' statements. For example, if you do not finish the statement 'When DTE'.

www.valuetronics.com

9

The Examine Data Menu

- Introduction
- Viewing the Buffer
- Examine Data Menu Features
- Examine Data Menu Softkeys
- Displaying Data
- More On Cursor Timing
- Examine Data Error Messages

www.valuetronics.com

Introduction

The HP 4952A is equipped with internal memory. This 32 Kbyte memory buffer loads continually when monitoring a line. When the memory capacity is reached the new data overwrites the oldest data.

An optional 768 Kbytes extended memory board is also available.

Viewing the Buffer

Press Exam Data on the Top Level Menu to look at the buffer contents. Notice how this is different from viewing while in the run mode, monitoring on-line, monitoring from the buffer, or simulating. In all of these, you are looking at the buffer during run-time. You can stop the display, but you cannot go backward. The Examine Data Menu lets you scroll through the entire buffer.

Most line activity is stored in the buffer. This is what makes it possible for the HP 4952A to post-process data from the buffer. The following items are stored:

- DTE and DCE characters
- Lead changes on the five interface leads. Select Data and State display format or use the highlight feature in the Monitor and Simulate Menus
- Errors, such as parity, BCC, and FCS
- Time marks and lead status

How the Buffer is Loaded

The buffer is continually being loaded with data when monitoring on-line or simulating. The buffer can also be loaded from a 3 1/2 inch microfloppy disc or by remote. If it is a controller it can download data or as a slave upload data. This gives you several alternatives on storing data and recalling it later or capturing new data and evaluating it in great detail.

www.valuetronics.com

Examine Data Menu Features

Viewing Timers and Counters After a Run

The examine data menu lets you look at the final state of the timers and counters after a run by pressing the Timer&Cntr softkey. The timers and counters are reset if another run is started, if Reset and Reset Menus are pressed, or if data is loaded from disc or remote.

Viewing the Entire Buffer

During run time you can stop the display and view the contents of the display buffer, but you can't go back and look at what you've missed. The examine data menu lets you go back after a run and scroll through the buffer.

Bit Shifting

If the framing is off because the sync characters are unknown, press Bit Shift in the Examine Data menu and realign the bits until the data becomes meaningful. Bit shifting is only available when Character or Bisync protocols are selected.

Bit shifting is not available when:

- Parity is selected; the softkey does not appear.
- Suppressing any display data.
- Data is selected to be MSB first.

Decoding Characters

Move the cursor to any character on the screen data. Look at the top border of the display and observe the binary, hex, and octal equivalents of the data at the cursor. You can also see the parity bit for any character and the number of positions the bits have been shifted.

Cursor Timing

Move the cursor to the starting event and press Start Time. Move the cursor to the ending event and press End Time. The time between the two events is shown at the top of the display. You can make both positive and negative timing measurements.

www.valuetronics.com

Decoding High Level Protocols

If the data contains other higher level protocol information (e.g., ISO levels 4-7, or SNA), the relevant fields can be read from the hex/octal/binary decoding at the top of the display.

Cursor Memory

The HP 4952A is equipped with a smart cursor. It remembers the location in data that it represents. When the cursor has been placed in data it will remain in that position even if you change menus and display formats.

Extended Memory Board (Option 02)

If your HP 4952A has the extended memory board, Option 02, the buffer is increased from 32 Kbytes to 768 Kbytes. During monitor or simulate execution, data is continuously loaded into the entire 768 Kbyte buffer memory.

The standard 32 Kbyte buffer is a window into the 768 Kbyte extended buffer. You can view only 32 Kbytes with the Roll Up, Roll Down, Next Page, and Prev Page key.

Use the Next Segmt and Prev Segmt to see a different 32 Kbytes of the 768 Kbyte extended buffer. When you use these keys, a bar at the bottom of the display shows approximately where you are in the buffer.

You can also go to a specific block by pressing Spec. Block.

The 768 Kbytes on the extended capture buffer is volatile, so current data is lost when the power is turned off. The standard 32 Kbyte buffer is nonvolatile.

www.valuetronics.com

Examine Data Menu Softkeys

The Examine Data Menu is a very versatile function within the HP 4952A. To accommodate the extensive function set three layers of softkeys are embedded under the MORE key. If the softkey function is not visible on the screen press MORE.

Hex/Text

The Hex and Text softkeys toggle between the two. If the current display is in text (Text is default) the available softkey is Hex. Press Text to display the data in the code selected in the setup menu. Press Hex to display the data in hexadecimal.

When one of the selections has been made, it will not change until the softkey is pressed again.

Roll Up and Roll Down

Press Roll Up or Roll Down to move the displayed data up or down one line at a time. You can view up to 32 Kbytes, the current contents of the display buffer.

Next Page and Prev Page

The Next Page and Prev Page softkeys move from one screen-full of data to the next immediate screen, either previous or successive. A page is one full screen of information.

Timer and Cntr

With the Timer&Cntr softkey you can at any time look at a summary of the setup parameters, as well as the status of the timers and counters at the end of the last run.

Specify Block

The Spec. Block softkey lets you specify a particular 2 Kbyte block. The block number indicates the first character's position in the buffer. Some buffer information, like time marks, is not displayed, so Next Page may cause the block number to jump by several numbers. Buffer data loaded from disc may have block numbers as high as 308 (384 with the Extended Capture Buffer).

www.valuetronics.com

Next Hilit

The Highlight softkey in the monitor or simulate menus lets you mark trigger events. The Next Hilit softkey lets you move to the next highlighted event.

You may have to press next segment in frame and in packet displays to get to the remaining highlights.

Note Highlights are not retained when data is stored to disc.

Next Segment and Prev Segment

The Next Segment and Prev Segment softkeys appear when you have loaded a data file from disc that is too large to be entirely contained in the buffer. With this feature you can examine the disc like the buffer. These softkeys load either the next or the previous 16 Kbytes of data from disc into the buffer for examination.

They also appear when the option memory is installed and greater than 32 Kbytes of data has been captured.

Bit Shift

Press the Bit Shift softkey and the entire data stream is shifted. If the displayed data is unrecognizable you may have to use this softkey to find the correct framing of unknown protocols.

This softkey appears only in character oriented setups. When either Character or Bisync protocols are selected in the Setup Menu a field appears to suppress specific data, i.e., idles, nulls, control character, etc. When any of the suppress options are turned on, bit shifting is not available.

Bit shifting is not available if bit order is MSB first.

www.valuetronics.com

Start Time and End Time

The Start Time and End Time softkeys are used for cursor timing. To find the time interval between two events in the buffer, move the cursor to the first event and press Start Time. Then move the cursor to the second event and press End Time. The time between the two events is displayed at the top of the screen border.

Note To measure time with cursor timing or with 'start' and 'stop' timer statements in the monitor and simulate menus, do not filter out timing information in the run menu when collecting data.

Change Display

Press the Chang Dsply softkey to change the display format.

Print Summary and Data

If you have an ASCII printer connected (see Chapter 13), you can print either the data display or the setup summary by pressing the Print Sum. or Print Data softkeys.

To print data from the Examine Data Menu:

- Place the cursor on the page you wish to begin printing.
- Enter the number of pages you wish to print (up to 9999).
- Press Print Data.

To stop printing in the middle of the print cycle press EXIT.

www.valuetronics.com

Displaying Data

The same six display formats available during run-time are available in examine data. You can change the display either by moving to the "display" field in the setup menu, or by pressing the Chang Dsply in the examine data menu.

Two Line	DTE over DCE. DCE data is displayed in inverse video (see Figure 9-1).
DTE	DTE data only. Displayed in regular video (see Figure 9-2).
DCE	DCE data only, Displayed in inverse video (see Figure 9-3).
Data and State	DTE over DCE data, and timing diagrams of four interface leads (see Figure 9-4). The Data & State display format does not show absolute timing relationships of activity occurring on different lines. Simultaneous events are not shown directly over each other but are staggered across the display screen. For example, in Figure 9-4, the top half of the display shows CTS and DSR transitioning from low to high. CTS appears to change before DSR. These transitions could be simultaneous. Use cursor timing to verify the time relationship of events on different lines.
Frame	Decodes the frames of bit oriented protocols. X.25 packets are also decoded at the top of the display when present. To decode a particular packet, move the cursor up or down to that particular frame. See the appendix for level 2 and 3 definitions (see Figure 9-5).
Packt	Decodes X.25 Level 3 packets. See the appendix for definitions (see Figure 9-6).

www.valuetronics.com

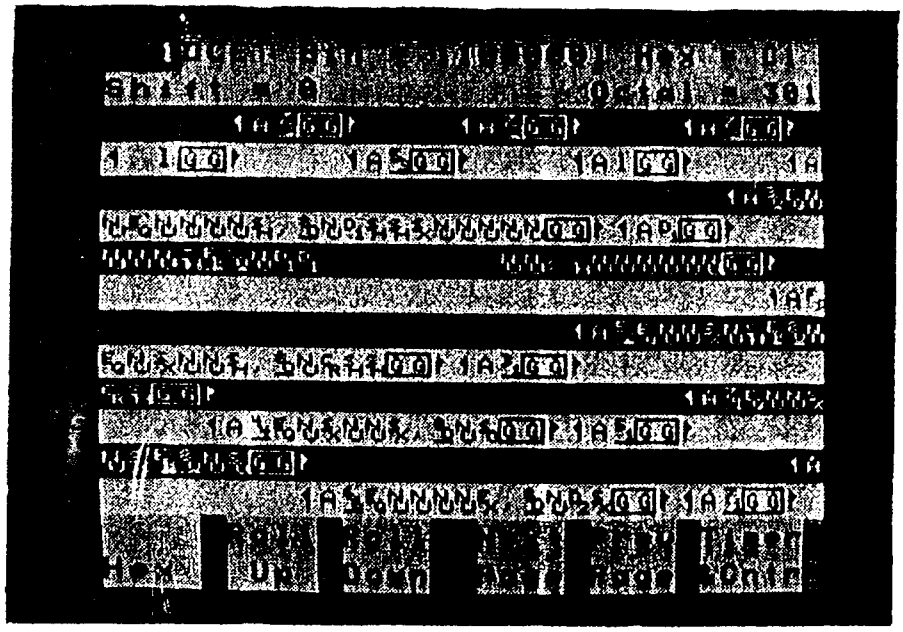

Figure 9-1. Two Line Format

How Setup Affects Display

The display formats let you look at the data in different ways. Use the format which best shows the aspect of interest.

Sometimes, you may need to change the display format in order to see the buffer data. For example, if the buffer data consists entirely of lead transitions, you must use data and state display format.

www.valuetronics.com

Blinking Characters

Blinking characters indicate failed error checks: BCC, FCS, parity, or framing errors resulting from incorrect setup or loss of synchronization.

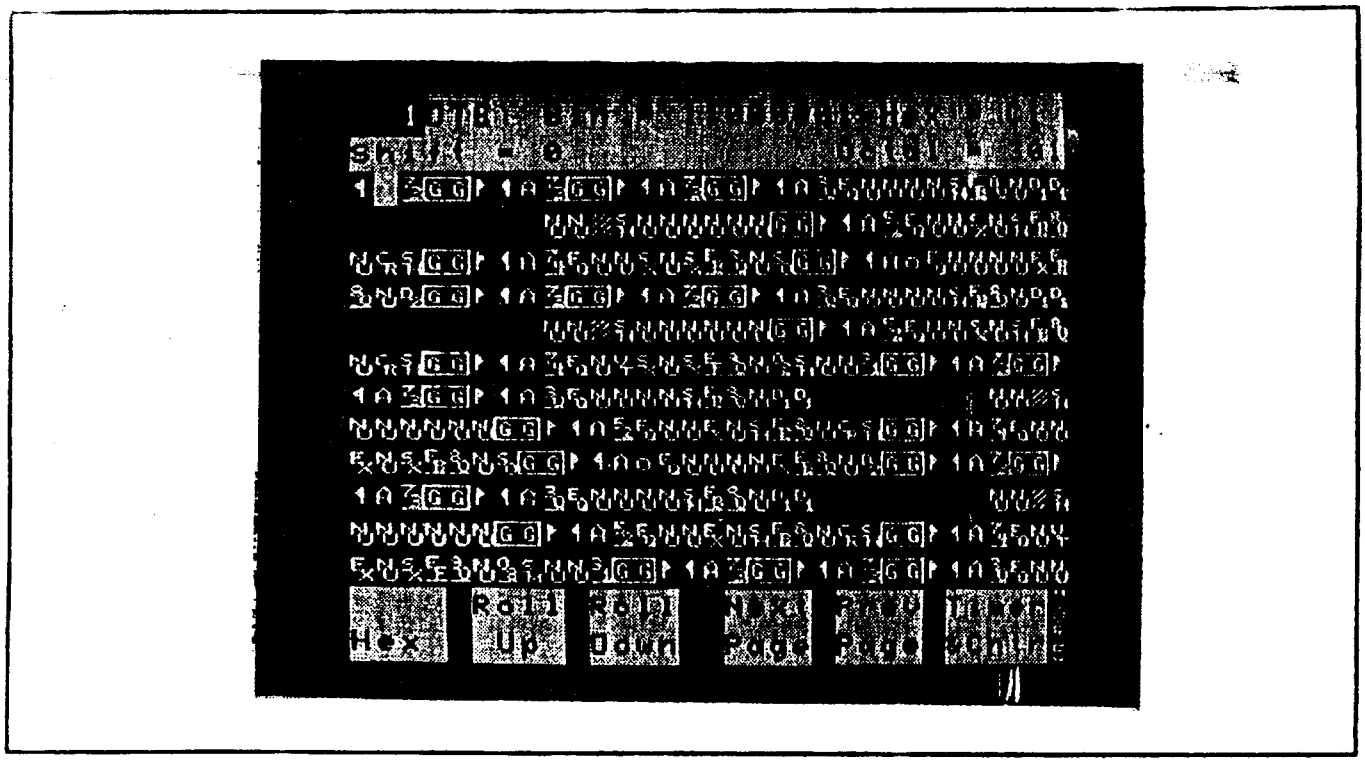

Figure 9-2. DTE Only

www.valuetronics.com

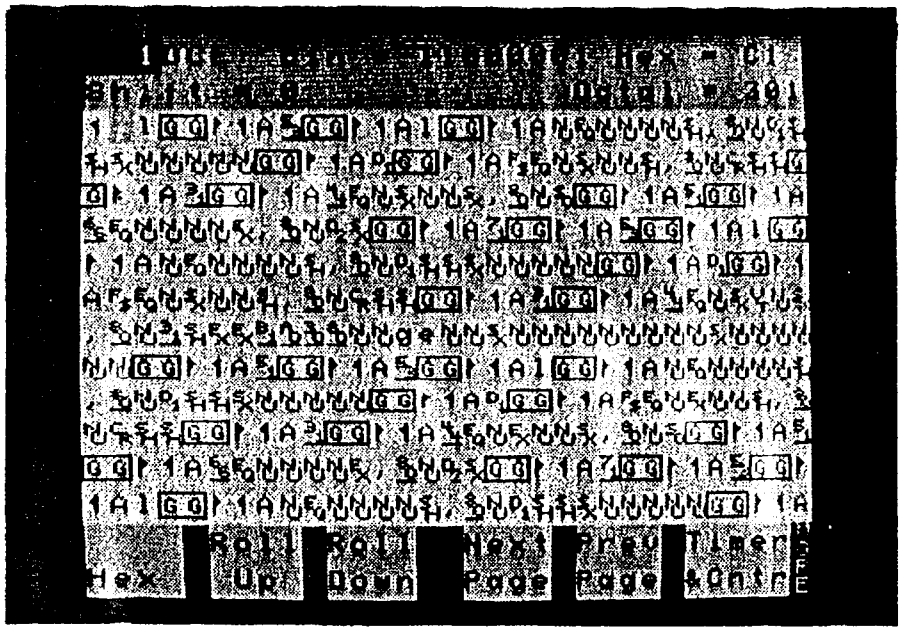

Figure 9-3. DCE Only

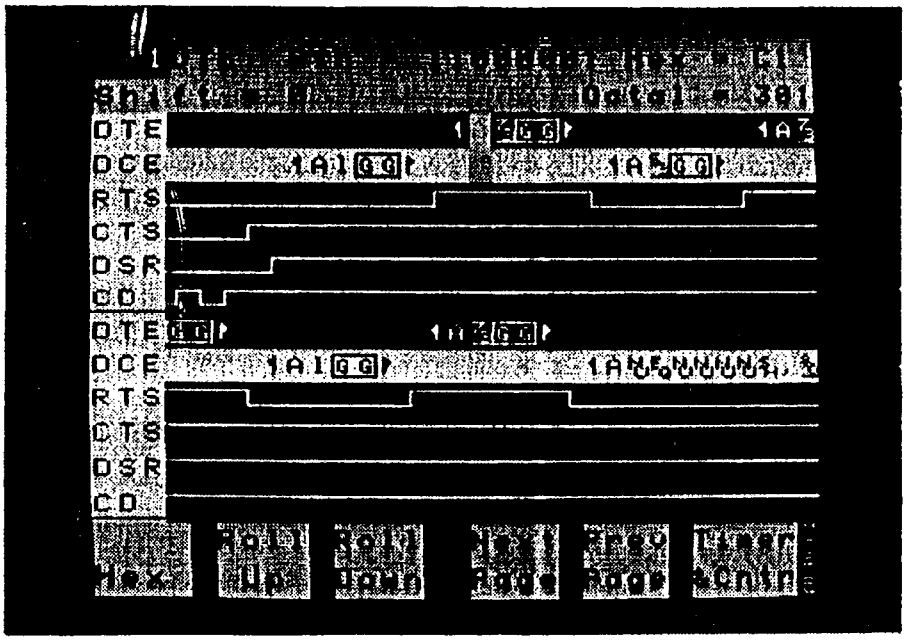

Figure 9-4. Data And State Format

www.valuetronics.com

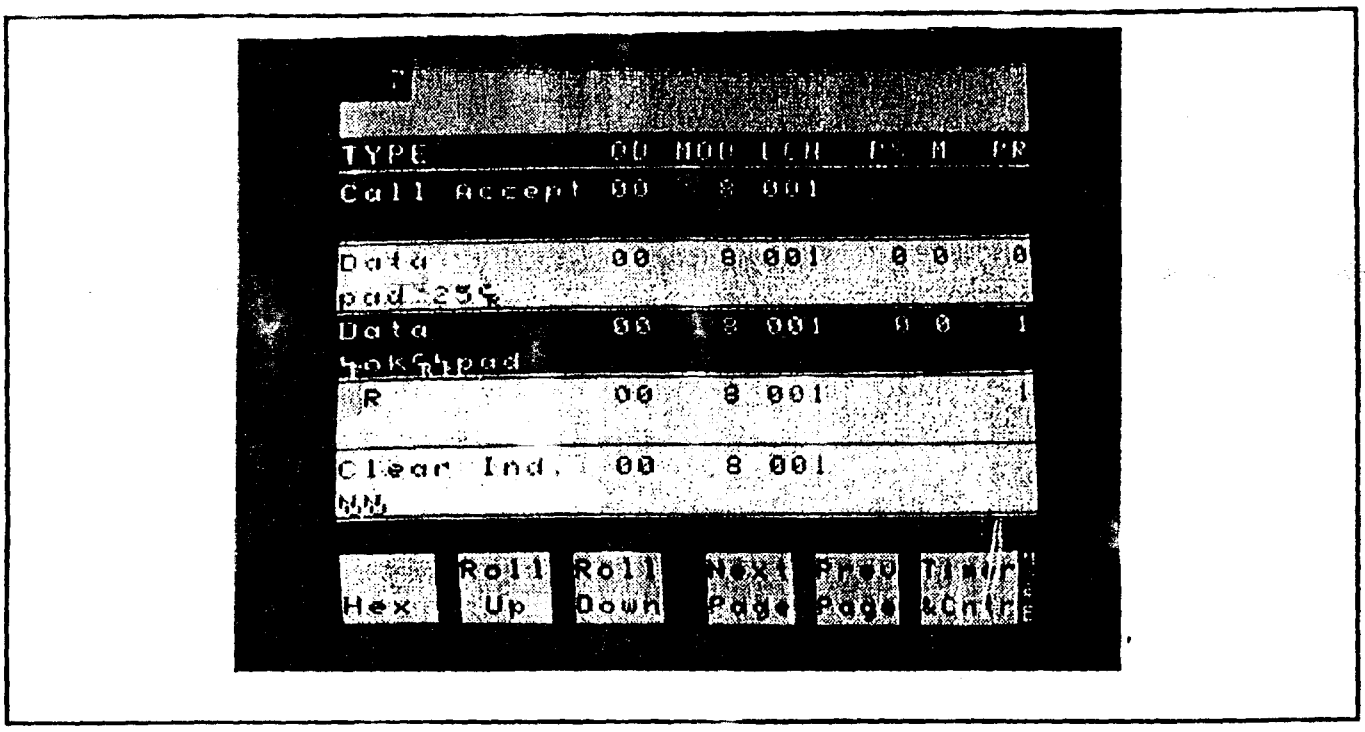

Figure 9-5. Frame Only

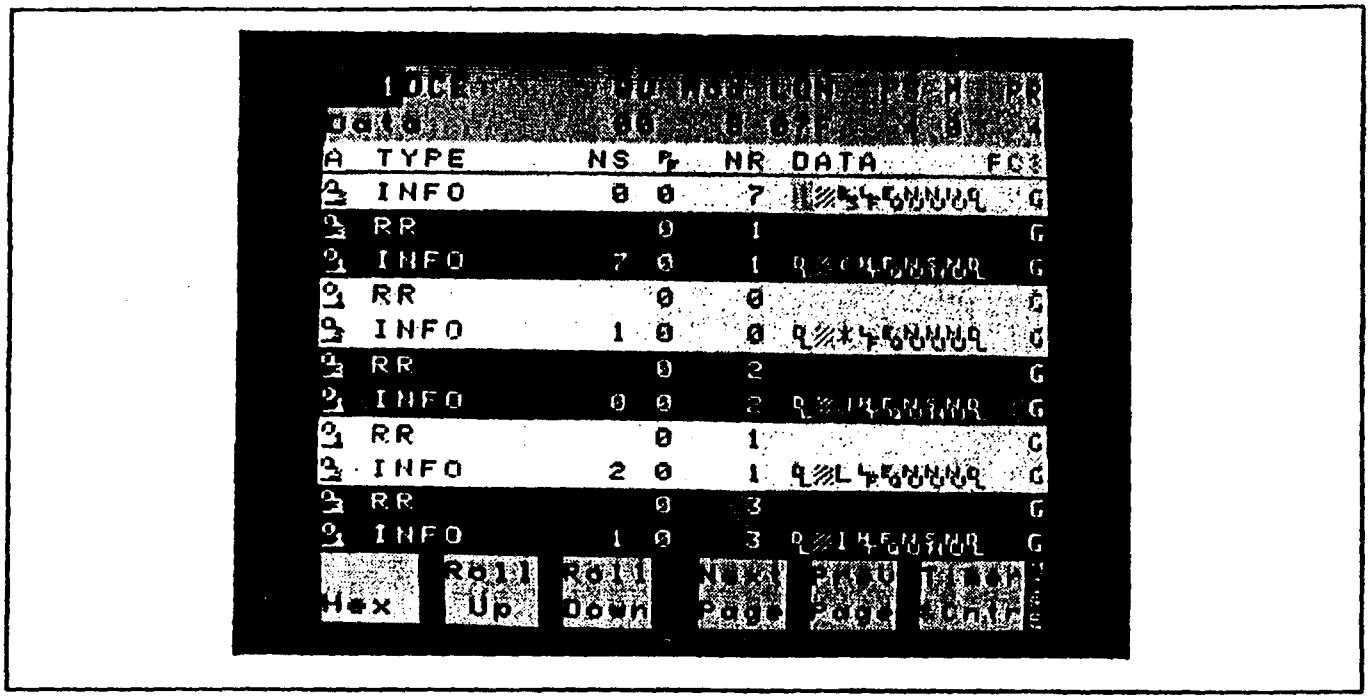

Figure 9-6. Packet Format

www.valuetronics.com

More On Cursor Timing

Lead Changes

Timing on lead changes is exact to the resolution provided by the speed rate selection in the setup menu.

Lead changes on the T and R lines (when an X.21 protocol is selected) are exceptions to the above rule. Timing information for the T and R lines is delayed 16 bit times from the beginning of a steady state "1" or "0". Timing on these signals represents when the lead should be recognized as a steady state "1" or "0", and not when the steady state signal began.

COP Send Strings

Data sent by the HP 4952A in character-oriented protocols (using send strings) has a two-bit offset in the timing information. Each transmitted character actually begins two bit times after the time reported by a cursor timing measurement.

Received COPs

Data received by the HP 4952A in character-oriented protocols is time stamped two bit times after each character is completed. So the delay from the start of each character to its time stamp is one character time plus two bit times.

The last character in a sync pattern has an added delay of one more character time. So the delay from the start of the last sync character to its time stamp is two character times plus two bit times.

The first character in a two character sync pattern has an added delay of still another character time.

www.valuetronics.com

Bit-Oriented Protocols

Data in bit-oriented protocols is time stamped in the same way regardless of whether it is sent or received by the HP 4952A.

The start flag time stamp has a delay equal to 26 bit times plus one bit time for each zero automatically inserted in the bit stream of the first two characters following the start flag. A zero is automatically inserted after a series of five consecutive ones.

The first byte (address) has a time stamp delay of 18 bit times plus one bit time for each zero inserted during its own transmission or during the following byte. The result is that a cursor timing measurement from the start flag to the first byte shows "time = 0.0 ms".

All other bytes, except the Frame Check Sequence (FCS), are time stamped 34 bit times after they begin, plus one bit time for each zero inserted after any of these 34 bits.

The first byte of the FCS is time stamped 24 bit times after it begins plus one bit time for each inserted zero. The second FCS character is time stamped 16 bit times after it begins plus one bit time for each inserted zero.

The end flag time stamp has a delay of eight bit times.

Timing Resolution

Timing resolution is the smallest unit of measurement that can be timed at a given speed. The following table gives the resolution for speed ranges, and a correction factor for exact measurements. To get a more exact measurement, multiply the time measured by the corresponding correction factor.

Speed	Resolution	Factor
50 - 2400	1.0 msec	1.0107
3200 - 4800	0.5 msec	1.0113
7200 - 9600	0.2 msec	1.0132
12 k - 64 kbps	0.1 msec	1.0164

www.valuetronics.com

Cursor Timing Limits

The maximum cursor time that can be measured before an overflow will occur is given in the table below. To determine the maximum cursor time that can be measured, select the speed (Bits/sec) and the corresponding maximum cursor time is given to the right in the table.

If an overflow does occur, you will have to use the Monitor menu timers and run from buffer data.

Bits/sec	Maximum Cursor Time
50 - 2400	66.24 seconds
3200 - 4800	33.14 seconds
7200 - 9600	13.28 seconds
12 k - 64 kbps	6.66 seconds

Note At 64 kbps, full duplex data may be time stamped such that occasional groups of two or three sequential characters appear to be simultaneous. This has no accumulative effect.

The Effect Of the Data Filter Upon Timing

If the timing information is disabled (turned "off") in the data filter menu, then the cursor timing feature operates normally with three exceptions.

1. The range within which measurements can be made is no longer 65,536 times the time stamp resolution but, instead, is only 64 times the time stamp resolution.

www.valuetronics.com

2. The range in item 1 above is absolute, not relative. So for any given start point, the total time before and after the start point is 64 times the resolution of the time stamps. For example, if the speed rate is 2400 bps, then the resolution is 1 millisecond. If a measurement is started at point B (see figure below), then you can only measure time up to point C or back to point A. The time between points A and C would be 64 milliseconds. Note that if the start point is D, you can still only measure time up to point C and back to point A.

```
SYSYSX This is sample data EXSYSYSX . . .
       ^    ^    ^              ^
       A    D    B              C
```

This is only an example. The actual points A and C are best determined in practice by moving the end time, one cursor position at a time, until the resulting measurement differs greatly from the previous result.

3. When the maximum range is exceeded, the result usually does not flash. Note that long time intervals can still be calculated by knowing how many times the range or boundary is crossed and then adjusting the result accordingly.

   In any case, cursor timing is meant to be used only when timing information is enabled. Timers in Monitor and Simulate menus do not work at all if the timing information is disabled when data is captured.

   Timing information should be disabled to retain the maximum amount of data in the capture buffer, specially in low line use situations.

www.valuetronics.com

Examine Data Error Messages

No data in buffer -- Use EXIT key to exit

This occurs if the buffer is empty when you go to the Examine Data Menu. Monitor On-Line, or load from the disc to fill the buffer.

No displayable data in buffer for the selected display format

This indicates that the buffer contains non-displayable data for the selected display format, such as lead transitions in a format other than Data and State, or DTE data only with DCE only format selected, or vice versa.

Disc removed during a read operation

When you remove the disc during a load operation, the buffer data is invalid. Use the EXIT key to exit. Try loading the data again.

Disc read error: buffer data invalid

This may be caused by a broken disc controller, or by a worn out disc. Use the EXIT key to exit. Try another disc to help isolate the problem.

End of valid data

When you scroll to the end of buffer data.

Start of valid data

When you scroll to the beginning of buffer data.

No more highlights

When you press the Next Hilit and there are no more highlights.

End of disc file

When you specify a block number beyond the last block on disc.

www.valuetronics.com

End of Data Segment

End of the current 16 blocks (32 Kbytes) of data.

Start of Data Segment

Start of the current 16 blocks (32 Kbytes) of data.

www.valuetronics.com

10

Bit Error Rate Tests (BERT)

- Definitions
- BERT Menu Softkeys
- BERT Menu Selections
- Running a BERT Test
- Data Screen Definitions
- Compatibility With Other BERT Testers
- DCE BERT
- BERT Error Messages
- Examples
- Other Tests

www.valuetronics.com

Definitions

Bit Error Rate Tests (BERT) measure digital noise. Through the use of BERT tests you can determine how often highs are erroneously changed to lows and vice versa. When in the BERT menu the HP 4952A is configured as a DTE.

PRBS (Pseudo Random Bit Sequence)

A BERT tester generates pseudo random bit sequences from a shift register of length L, where the sequence length equals 2^L - 1 bits. A PRBS may be of any length but certain pattern lengths have become standard. The HP 4952A uses PRBS lengths of 63, 511, 2047, or 4095.

Bit Error Rate

The number of bit errors divided by the number of bits received.

Blocks

Bit error rate does not give any indication of error distribution. For example, if most errors occur within a few moments of each other, it might indicate that the line was all right, but had perhaps been affected by a lightning hit or path switch. For this reason, bits are grouped in blocks for measuring block error rate, sometimes referred to as BLERT.

Note BERT blocks are not to be confused with blocks used in other HP 4952A menus.

Block Error Rate

The number of block errors divided by the number of blocks received. Whether there is one error or ten errors in a block, it is still counted as one block error.

Block Sizes

The Bell system uses a block size of 1000 bits. CCITT, the world-wide standard, uses a block size equal to the pattern size. For example, if the PRBS pattern is 511 bits, then the block size would also be 511 bits.

www.valuetronics.com

BERT Menu Softkeys

Press BERT Menu on the Top Level Menu. The BERT Menu selections are shown on the next page.

Pattern

Four PRBS pattern lengths are available: 4095, 2047, 511, and 63 bits.

Block Size

The 1000=bit block size is used in the U.S.A. CCITT, the world wide standard, uses 511 and 2047-bit block sizes.

Duration

You can select the length of the test either as a time interval or as the number of bits sent. For later comparison, test durations must be the same.

Bits/Sec

Notice the Bits/Sec selections are different from the other menus.

If the network clock is being supplied by the network or modem, select EXT for the speed.

Framing

Framing means that you send standard asynchronous characters with one start bit and two stop bits. The frame size is equal to the start and stop bits plus an optional parity bit plus the selected character size. To select framing, choose the size of the data character (5, 6, 7, or 8 bits). An optional parity bit may be added immediately after the data character, before the two stop bits. Each frame alternates with an idle (high) time which is the same length as the frame. If you don't want framing, press None .

Parity

If you select framing, three new softkey choices appear. You can select odd, even, or none.

www.valuetronics.com

BERT Menu Selections

```
Pattern       [ 4095 ]
              [ 2047 ]
              [  511 ]
              [   63 ]

Block Size    [ 2047 bits ]          Framing   [ None  ]
              [ 1000 bits ]                    [ 5 bits ]
              [ 511 bits ]                     [ 6 bits ]
                                               [ 7 bits ]
Duration      [ 10^4 ]  [   10^9   ]           [ 8 bits ]
              [ 10^5 ]  [  5 min   ]
              [ 10^6 ]  [ 10 min   ]
              [ 10^7 ]  [ 15 min   ]  Parity   [ None  ]
              [ 10^8 ]  [   Cont   ]           [ Odd   ]
                                               [ Even  ]

Bits/sec      [ 64000 ]     [ 4800 ]   [  300 ]
              [ 56000 ]     [ 3600 ]   [  200 ]
              [ 48000 ]     [ 3200 ]   [  150 ]
              [ 38400 ]     [ 2400 ]   [ 134.5 ]
              [ 19200 ]     [ 2000 ]   [  110 ]
              [ 14400 ]     [ 1800 ]   [   75 ]
              [  9600 ]     [ 1200 ]   [   50 ]
              [  7200 ]     [  600 ]   [  EXT ]
```

Compatibility With the HP 4951 Protocol Analyzer

The following BERT menu entries are unique to the HP 4952A and are not supported on the HP 4951 Protocol Analyzer.

4095 PRBS pattern length
38400, 4800, 56000, and 64000 bit per second

If you load an HP 4952A BERT menu into an HP 4951, either from disc or remote transfer, the entries listed above will be changed by the HP 4951 into different entries. These different entries are unpredictable.

www.valuetronics.com

Running a BERT Test

After you have entered the test parameters in the BERT Menu, press **Run Menu** . In the Run Menu press **BERT** .

Data Screen

When you press **BERT** in the Run Menu, a run-time data screen continuously displays test progress. A flashing display indicates a 'rolled-over' condition. This occurs when a counter has reached its maximum and restarted the count at 0. The following table indicates the displayed data with maximum count registers.

Display	Maximum Count
Elapsed Seconds	65535 secs (approximately 18.2 hours)
Errored Seconds	65535 secs
Block Count	65535 count
Block Error	65535
Bit Count	99 X 10E9
Bit Error	65535 count

Completion of a Test

When a receiving BERT tester receives all the bits required for the test, or when you press EXIT, the receiver stops the test. The transmitter continues to transmit, ensuring that the other receiver gets all needed test bits.

% Error-free Seconds

The % error-free seconds is computed when the receiver is finished when you press EXIT.

Exit Key

EXIT halts reception. Press EXIT again to return to the Top Level Menu.

Setup Summary

During a test, press **Summary** to look at setup parameters without stopping the test. To change setup parameters, stop the test by pressing EXIT twice and reenter the BERT Menu.

www.valuetronics.com

Inject Error

Press **Inject Error** at any time during the test. The receiver at the other end should indicate one bit error. This function can be used at the beginning of the test to check for proper hookup.

Inject 10 Errors

Press **Inject 10 Err** to send a burst of errors. The receiver at the other end should have counted ten bit errors, one or two block errors, and one or two errored seconds.

Compatibility With Other BERT Testers

Synchronization

Unless the BERT receiver is synchronized to the transmitter at the other end, the receiver has no way of knowing whether the next bit in the received PRBS pattern is correct. You should use BERT testers equivalent to the HP 4925B which have the following characteristics:

1. For unframed patterns, the speed of the clock generating the transmitter pattern must be within 1% of the clock generating the receiver pattern.

2. With framing, the clocks should be within 5% of each other.

Handshaking

For BERT testing, the HP 4952A simulates a DTE. At the beginning of the test the HP 4952A sets the RTS and DTR interface leads on. For RS-449 interfaces, it sets RS and DS on.

www.valuetronics.com

DCE BERT

This application enables the HP 4952A to function as a DCE while running Bit Error Rate Tests. The standard instrument can function as a DTE, but not a DCE. With this application loaded the HP 4952A emulates a DCE by transmitting and receiving PRBS patterns and appropriate clocks for asynchronous, synchronous, and isochronous links.

This application is supplied on the Utility disc that was shipped with the standard instrument.

Loading The Application

Note This application cannot be used concurrently with other applications.

Load the Utility Disc into the HP 4952A Protocol Analyzer.

1. From the Top Level Menu, press MORE, and then press Mass Store .
2. Move the cursor to the DCE_BERT selection, press Load and then press Execute .

The DCE BERT application will be loaded.

www.valuetronics.com

DCE BERT Setup

The DCE BERT Setup menu is in the second level softkeys.

- Press MORE in the Top Level Menu; a new softkey appears.
- Press DCE BERT and use the setup menu to make the proper settings to run the DCE BERT application.

Note Do not use the BERT Menu in the Top Level Menu to make setups for DCE BERT operation. The BERT menu on the standard instrument is for DTE BERT operation.

DCE BERT can be run in three modes:

- Asynchronous
- Synchronous
- Isochronous

Note The HP 4952A may be set in either an end-to-end or a single unit loopback configuration.

---

www.valuetronics.com

Asynchronous

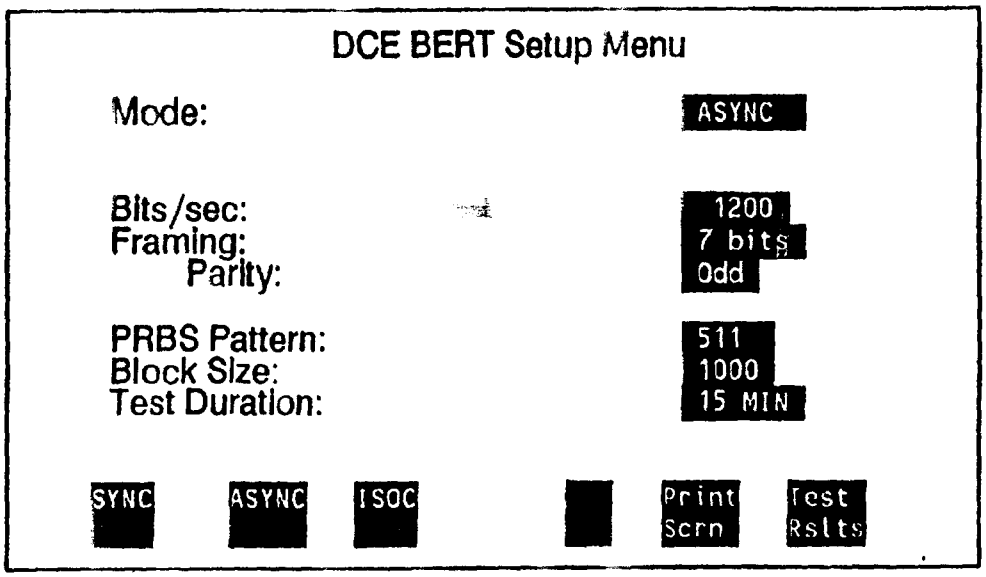

Figure 10-1. Asynchronous Screen Selections

The asynchronous menu selections are:

```
Bits/sec
[ 19200 ]    [  9600 ]    [  7200 ]    [  4800 ]    [  3600 ]    [  3200 ]
[  2400 ]    [  2000 ]    [  1800 ]    [  1200 ]    [   600 ]    [   300 ]
[   200 ]    [   150 ]    [ 134.5]     [   110 ]    [    75 ]    [    50 ]
             [   64K ]    [   56K ]    [   48K ]    [ 38.4K ]    [ 14.4K ]

Framing
[ 5 bit ]    [ 6 bit ]    [ 7 bit ]    [ 8 bit ]    [ None  ]

Parity
[ None  ]    [ Even  ]    [  Odd  ]

PRBS Pattern
[ 4095  ]    [ 2047  ]    [  511  ]    [   63  ]

Block Size
[ 1000  ]    [  511  ]    [ 2047  ]

Test Duration
[ 10^4  ]    [ 10^5  ]    [ 10^6  ]    [ 10^7  ]    [ 10^8  ]    [ 10^9  ]
[ 5 Min ]    [10 Min ]    [15 Min ]    [  Cont ]
```


www.valuetronics.com

Synchronous

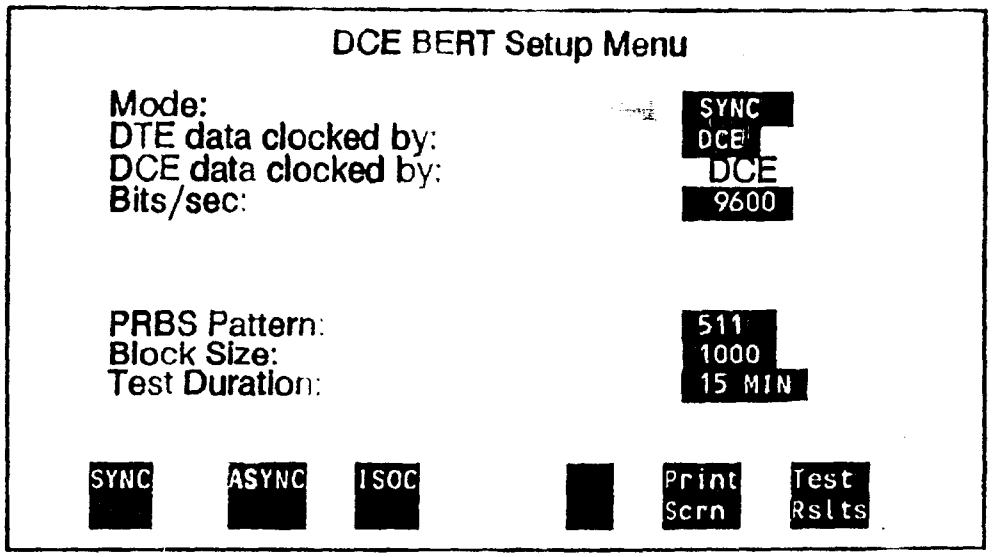

Figure 10-2. Synchronous Screen Selections

The Synchronous Menu Selections are:

```
DTE data clocked by:     [DCE INTERNAL]          [DTE EXTERNAL]

Bits/sec
[ 19200 ]    [  9600 ]    [  7200 ]    [ 4800 ]    [  3600 ]    [  3200 ]
[  2400 ]    [  2000 ]    [  1800 ]    [ 1200 ]    [   600 ]    [   300 ]
[   200 ]    [   150 ]    [  134.5]    [  110 ]    [    75 ]    [    50 ]
             [   64K ]    [   56K ]    [  48K ]    [ 38.4K ]    [ 14.4K ]

PRBS Pattern
[ 4095  ]    [ 2047  ]    [  511  ]    [  63  ]

Block Size
[ 1000  ]    [  511  ]    [ 2047  ]

Test Duration
[ 10^4  ]    [ 10^5  ]    [ 10^6  ]    [ 10^7  ]    [ 10^8  ]    [ 10^9  ]
[ 5 Min ]    [10 Min ]    [15 Min ]    [  Cont ]
```


www.valuetronics.com

Isochronous

Isochronous transmission is asynchronous data with an internal X1 clock.

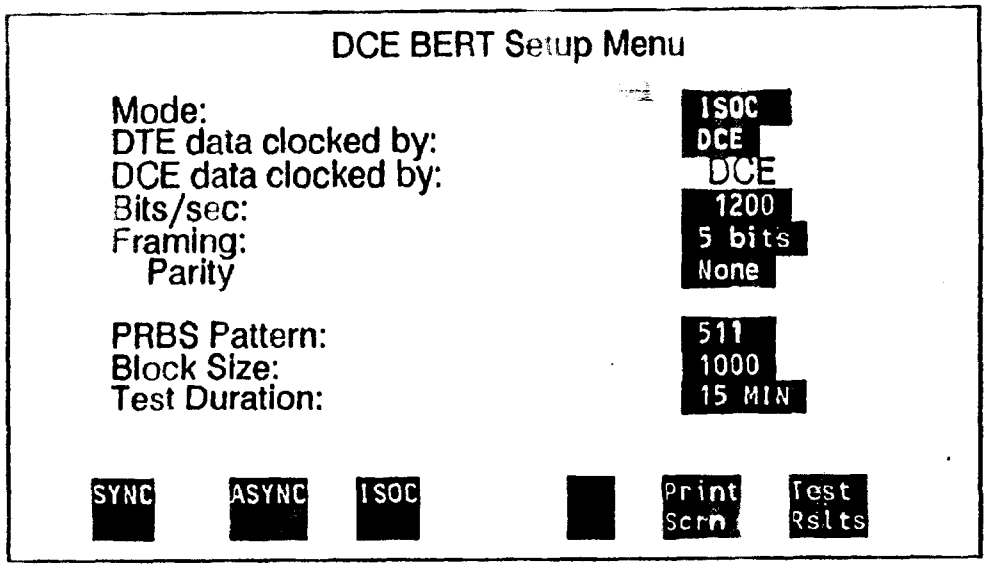

Figure 10-3. Isochronous Screen Selections

The Isochronous Menu Selections are:

```
DTE data clocked by:     [DCE INTERNAL]          [DTE EXTERNAL]

Bits/sec
[ 19200 ]    [  9600 ]    [  7200 ]    [  4800 ]    [  3600 ]    [  3200 ]
[  2400 ]    [  2000 ]    [  1800 ]    [  1200 ]    [   600 ]    [   300 ]
[   200 ]    [   150 ]    [ 134.5]     [   110 ]    [    75 ]    [    50 ]
             [   64K ]    [   56K ]    [   48K ]    [ 38.4K ]    [ 14.4K ]

Framing
[ 5 bit ]    [ 6 bit ]    [ 7 bit ]    [ 8 bit ]

Parity
[  None ]    [  Even ]    [  Odd  ]

PRBS Pattern
[ 4095  ]    [ 2047  ]    [  511  ]    [   63  ]

Block Size
[ 1000  ]    [  511  ]    [ 2047  ]

Test Duration
[ 10^4  ]    [ 10^5  ]    [ 10^6  ]    [ 10^7  ]    [ 10^8  ]    [ 10^9  ]
[ 5 Min ]    [10 Min ]    [15 Min ]    [  Cont ]
```


www.valuetronics.com

BERT Error Messages

Bad Data - Cannot Sync

Indicates that incoming data does not match selected pattern. Could be either lots of line errors, wrong speed selected, or wrong pattern selected.

Data Error - Sync Lost

Indicated that sync was lost after start of text. Could be either line going bad, or tester changed on other end of the line.

No Data Present

Non framed cases - indicates all 1's coming in. Framed cases - indicates no character being received.

Clock Slipped During Run

Corrupt data received. A portion of the bit stream was lost.

Sync Lost One or More Times

A Data Error - Sync Lost error has occurred more than once.

www.valuetronics.com

Examples

Example 1: End-to-End Testing

Two BERT testers are connected to opposite ends of the line. Each BERT tester contains both a transmitter and a receiver, making it possible to check both send and receive channels simultaneously. The transmitter at each end is essentially a PRBS generator; the receivers are pattern checkers.

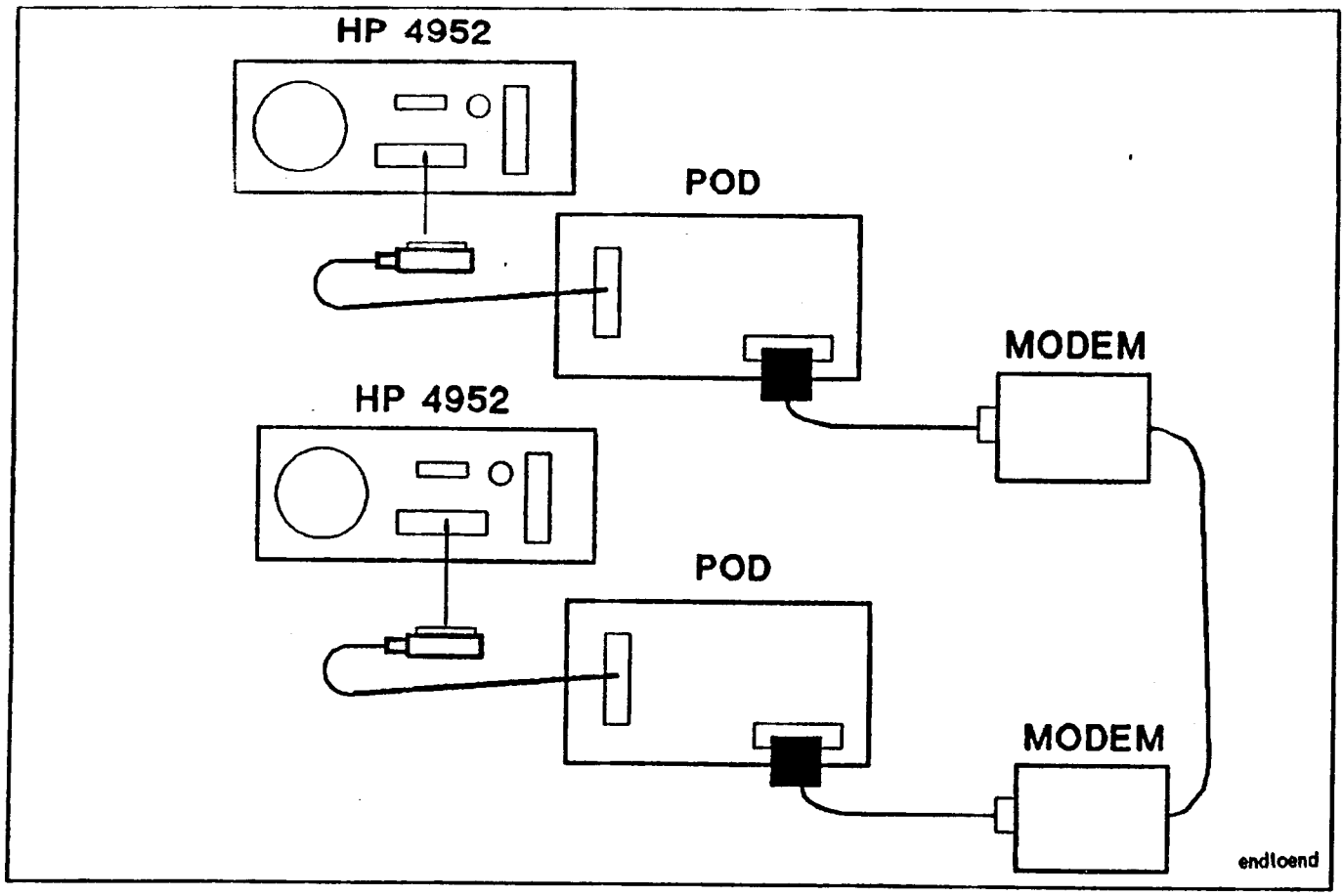

Figure 10-4. End-to-End Testing

www.valuetronics.com

Example 2: Loopback Testing

If you have only one BERT tester, you can loop back at the other end. The BERT tester sends on one channel, and receive its own transmission on the other channel. Remember, if you loop back, you will be adding together the errors on both the send and receive channels: one channel may contain many more errors than the other channel.

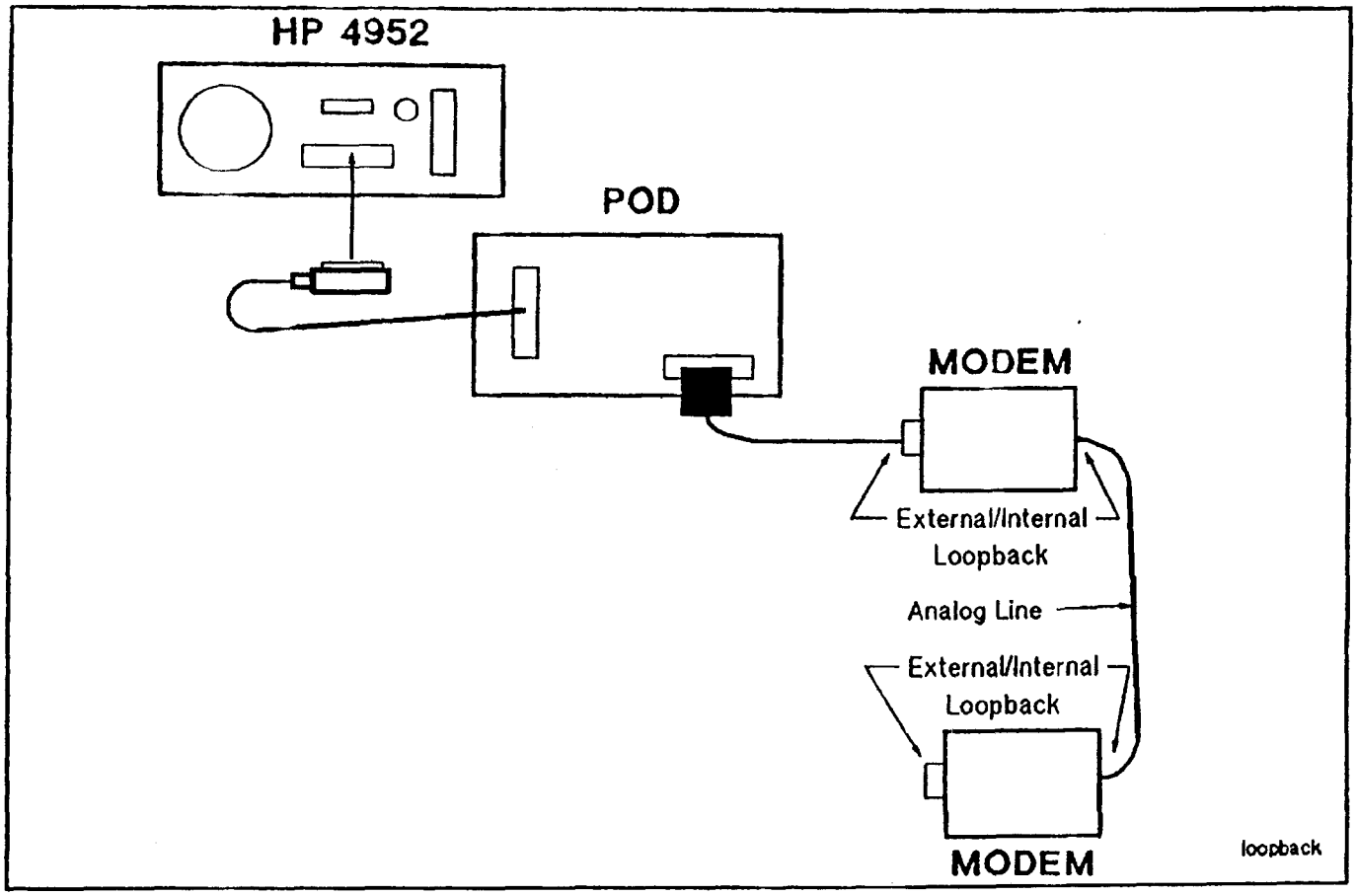

Figure 10-5. Loopback Testing

www.valuetronics.com

Other Tests

Some BERT testers (such as the HP 4925B) perform the following character error checking besides BERT tests.

Quick Brown Fox Tests

The 'Quick Brown Fox' message (or any message) tests the ability of terminals to receive messages. Use the Simulate Menu in the HP 4952A to run this test.

Startup Tests

The HP 4952A does many types of start-up tests, such as RTS - CTS delay (see Chapter 16, examples 9 and 10 for more on End-to-End testing).

www.valuetronics.com

11

The Remote Menu

- Introduction
- Remote Setup
- Remote Operations
- Remote Menu
- Modem Operations
- Tape To Disc File Transfer
- Remote Status Messages

www.valuetronics.com

Introduction

The HP 4952A can be used on a remote site and is capable of unattended operation. This capability enables unmanned data gathering or control. Once a remote analyzer is set up a controlling instrument, an HP 4952A or any other HP protocol analyzer, can send instructions, applications, and menus and receive data for later evaluation.

The Remote Menu is used to configure two Hewlett-Packard protocol analyzers together to communicate and test a remote data line. Within the menu are submenus to configure one analyzer as a controller and one as a slave.

Remote Setup

Remote operation demands that two protocol analyzers be physically linked together. This can be accomplished through asynchronous modems or, without modems, using a modem eliminator cable. Each connection is made using the REMOTE/PRINTER connector on the rear panel.

When the two analyzers are connected:

- Configure each analyzer, one as the controller and one as the slave.

Note Make sure the instrument designated as the slave is configured in the slave menu. If it was mistakenly configured in the controller menu no remote communication is possible.

- Set the data rate of each instrument the same and slave address if the slave is an HP 4953A.
- Press EXIT two times to place the slave in the Top Level Menu.
- Proceed with remote operation.

www.valuetronics.com

Remote Operations

The HP 4952A can receive and transmit menus, applications, and buffer data remotely to another HP protocol analyzer. When used as a slave at a remote site the HP 4952A is capable of unattended operation.

Resetting To Top Level

Many operations cannot be executed unless the slave is in the Top Level Menu. To put the slave in the Top Level Menu you must reset the slave:

- Execute the **Reset Slave** command from the controller while it is connected to the Slave.
- Or press EXIT on the slave keyboard until the Top Level Menu screen appears on the Slave.

Lockout Slave's Keyboard

Keyboard locking is automatic with an HP 4952A as a slave. All operations except 'slave's status', 'identify slave', and 'reset slave' require the keyboard to be locked. To lockout the keyboard, the slave must be in the Top Level Menu.

Ending Remote Operations

To stop execution of any remote operation, press EXIT on the controller to return to the remote menu. This will abort the current slave operation immediately. The operation may not complete.

Remote Restrictions

The slave HP 4952A cannot be in the Setup menu when it is uploading menus to a controller.

Monitor and Simulate programs with 'message' statements cannot be uploaded to an HP 4951, HP 4953 or HP 4955 without corrupting the controller menus.

www.valuetronics.com

Uploading Monitor and Simulate programs with 'when softkey', 'gosub', and 'return' statements will cause a non-HP 4952A controller to see trigger in and trigger out statements. These can be transferred back to the HP 4952A without losing the original statements (except to an HP 4953A).

"CCITT Set 0s" error check selection can only be transferred to another HP 4952A.

X.21 menus can only be transferred to another HP 4952A.

The monosync mode selection can only be transferred to another HP 4952A.

Controller operations without a valid slave response will abort:

- After 24 seconds above 300 baud (three retries of eight seconds each).
- After 48 seconds at or below 300 baud (three retries of sixteen seconds each).
- After three CRC errors.

Extended menus lets you save remote and printer setup menus as well as BERT test results. Extended menus can not be transferred by remote. X.21 menus (or externally clocked NRZI) must be saved by extended menus.

Remote Data Transfer

There are two basic data transfer operations:

- Transfer from controller to slave (download)
- Transfer from slave to controller (upload)

As a Controller, the HP 4952A can download menus, applications, and data to the slave or receive uploaded information from the slave.

Data transfer can be accomplished with or without an extended capture buffer. Either the controller or the slave may or may not have an ECB and the data flow will be performed.

www.valuetronics.com

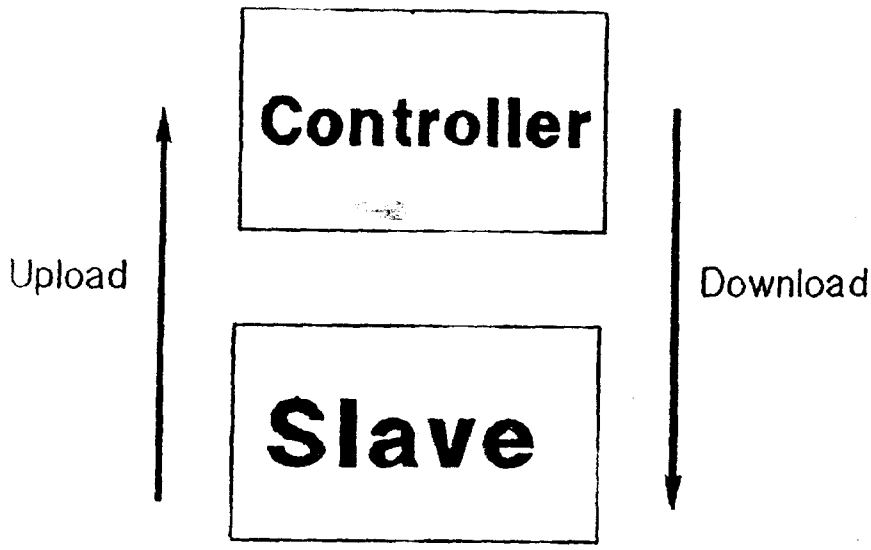

Figure 11-1. Data Transfer

Download Applications

A controller displays the current block number being transferred. The size of an application is listed in sectors in the directory. To equate the two, one block equals 8 sectors.

To download an application from a controller:

1. Load the application you want to transfer and return to the Top Level Menu.
2. Press MORE and press `Remote&Print` to access the Remote Menu.
3. Configure the controller menu by setting the Bits/sec, Modem String, and select an operation.
4. Configure the slave menu by setting the slave address, Bits/sec and Modem String and return the slave to the Top Level Menu.
5. Press `Dnld Appl` (download application).

Note Every time a command is selected in the Remote Menu you must press `Execute` telling the controller to begin the operation.

---

www.valuetronics.com

To download data from a controller:

1. Load the data you want to transfer and return to the Top Level Menu.
2. Press MORE and press Remote&Print to access the Remote Menu.
3. Configure the controller menu by setting the Bits/sec, Modem String (if desired), and select an operation.
4. Configure the slave menu by setting the slave address, Bits/sec and Modem String.
5. Return the slave to the Top Level Menu.
6. Press Dnld Data (download data).

Note Every time a command is selected in the Remote Menu you must press Execute telling the controller to begin the operation.

---

7. Press Execute. The analyzer will display the results, e.g., `Operation successful.`

Upload to Controller

When operating protocol analyzers in the remote mode, a logical sequence is download a menu to a slave, instruct the slave analyzer to capture data, tell the slave to transmit all captured data up to the controller for evaluation.

A slave can upload applications, menus, and data. The most common occurence will be uploading data to the controller for evaluation in the Examine Data menu.

When data is uploaded you must specify the slave's blocks to be transferred. The slave will reject transfer requests that are not within the range of its buffer, 384 blocks with an ECB and 16 blocks without an ECB. The slave will also reject requests for negative or 0 blocks.

The controller will place the received blocks of data in the corresponding controller blocks.

Caution Data in the controller buffer is overwritten when uploading data from a slave.

---

www.valuetronics.com

Controller Softkeys

The controller sends the commands to the slave. Each command is softkey driven.

ID Slave

The slave transmits its model number. This is often performed to test for proper remote communication.

Slave Status

Requests the slave to transmit its current menu and error status to the controller. Tells what the slave is doing.

Execute Run

Executes the slave's run menu. The operation executed is the last operation that was run on the slave or the last operation set up on the slave.

Reset Slave

Stops slave execution and resets the slave to its Top Level Menu.

Timers and Counter

The slave transmits the status of its timers and counters. This is an upload function only.

Lock Keyboard

The slave's keyboard becomes inoperable. This is necessary before executing all operations except 'slave status', 'identify slave', and 'reset slave'. Lock keyboard is performed automatically on HP 4952As functioning as a slave.

Enable Keyboard

After a 'lock keyboard' operation, this operation is necessary to restore the slave's keyboard. This may be necessary if a menu, data, or application transfer is aborted by the controller.

www.valuetronics.com

Run Application

Loads the application that is currently resident in the slave into application memory. Use Execute Run to execute the application.

Download Application

Transmits the currently active application program from the controller's application memory to the slave. To execute the application on the slave, use Run Appl .

Upload Application

Receives the current application program from the slave's application memory and executes it on the controller.

Download Menu

Transmits the setup, monitor, simulate, and run menus to the slave.

Delete Application

Deletes the current application in the slave's application memory.

Download Data

Transmits test results from the controller buffer to the slave.

Upload Data

Receives buffer data from the slave. You must specify the correct block limits in the slave.

Remote BERT

When Exec BERT (Execute BERT menu) is selected as the operation, the slave's BERT menu is executed. Use 'download menus' to change the slave's BERT menu. The slave must be in the Top Level Menu and must be an HP 4952A.

When BERT stat (Upload BERT stats) is selected as the operation, the BERT statistics are sent from the slave to the controller. Either the current statistics if BERT is running, or the last statistics if the slave is in the Top Level Menu. After the statistics have been uploaded you can print them from the BERT menu. It is not possible to view percent error free seconds, but it can still be calculated.

www.valuetronics.com

Remote Menu – Controller Configuration

Bits/sec [19200] [9600] [4800] [2400] [1200]
[600] [300] [200]

Modem String [Use keyboard to enter hex or text characters]

Operation

[ID Slave]	[Exec BERT]
[Slave Status]	[BERT stat]
[Execute Run]	[Halt Slave]
[Timers & Ctrs]	[Lock Keyboard]
[Enable Keybd]	[Run Appl]
[Downld Applic]	[Upld Applic]
[Downld Menus]	[Upld Menus]
[Delete Applic]	[Downld Data]
[Upld Data]	Start Blk # [ ] End Blk # [ ]

Remote Menu -- Slave Configuration

Slave Addr (00-15) [Use keyboard to enter decimal characters]

Bits/sec [19200] [9600] [4800] [2400] [1200]
[600] [300] [200] [Save Cnfg]

Modem String [Use keyboard to enter hex or text characters]

www.valuetronics.com

Modem Operations

Note Only asynchronous modems can be used for remote transfers.

Modem Strings

The modem string field in the controller and slave menus enables you to configure the modem. For example, with a Hayes Smart Modem, you might enter ATDT9,,5551212. Press Send Config to send the controlling string to the modem.

Modem Handshaking

In remote operations, the HP 4952A is configured as a DTE. The following handshaking convention is used.

1. DTR is turned on when you press Execute. The HP 4952A then waits for DSR to go on.
2. The HP 4952A then sets RTS on and waits for CTS and CD to go on.
3. The "modem string" field is for configuring the modem.

Operations Without Modems

The HP 4952A is configured as a DTE for remote operations. If two units are connected directly without modems, one unit must be configured as a DCE.

For applications with no modem, use a modem eliminator cable such as the RS-232C/V.24 printer cable M/M (HP 13242G). You may also open all the breakout switches except pin 7 on one of the pods, and jumper the following pins: 2 to 3, 4 to 8, and 5 to 6 to 20.

www.valuetronics.com

Remote X.25 Packet Switched Network

An X.25 Packet Switched Network can be used to transmit data instead of modems. The restrictions on this operation are:

- X.25 PADs are configured to be transparent to data, i.e., no additional processing of data, no messages sent back to the HP 4952A. You must establish a Permanent Virtual Circuit between the two analyzers for the duration of the data transfer. When the network connection is established you can upload data from the slave.
- The controller must receive a response from the slave for each operation within 24 seconds or it will abort. Excessive propogation will prohibit remote communications due to the instrument timeout.

Tape To Disc File Transfer

If you have menus or data files that are stored on tape cassette from an HP 4951A or HP 4951B, you can remotely transfer these file to the HP 4952A and store them on disc.

General Procedure

To transfer files from tape to disc:

- Connect the tape-based and disc-based analyzers together through the remote ports or interface pods.
- On the tape-based analyzer load the desired file from tape into the buffer.
- Remotely transfer the data or menus to the disc-based analyzer using the Remote menu.
- On the disc-based analyzer store the file to disc.

www.valuetronics.com

Remote Status Messages

Application Cannot be Run on 4952

Invalid application for the HP 4952. Select another model protocol analyzer and proceed.

Application Already Loaded

The application is already loaded in slave memory.

Invalid Application for 4952

Application cannot be run on the HP 4952.

Menus Incompatible with 4952

Communication between different protocol analyzers cannot be accomplished.

Must Reset Slave First

Press `Reset Slav` before continuing.

Must Reset Slave to Top Level

Slave must be in the Top Level to continue operation.

No Data in Buffer

There is no data in the buffer to be transferred.

No Application Resident

The desired application cannot be run. Load application and continue.

Reset Slave and Retry Operation

Slave must be reset to continue.

www.valuetronics.com

12

Mass Storage

- Introduction
- The Mass Store Menu
- Loading From Disc
- Storing To Disc
- The Extended Memory Board (Option 002)
- The RAM Disc
- Using the Extended Capture Buffer (ECB)
- Memory Blocks and Disc Sectors
- The Disc Drive
- The Copy Disc Utility

www.valuetronics.com

Introduction

The HP 4952A has two mass storage devices: a disc drive and a 32 Kbyte buffer. Also available is an optional 768 Kbyte Extended Memory Plus memory board (Option 002).

The Disc Drive

The disc drive provides 613 Kbytes of usable storage per disc.

- You can load (read) data and menus from the disc.
- You can store (write) data and menus to the disc.
- Several types of files are possible: data only, menus only, extended menus only, menus and data, or application programs. Thus, you can load or store the menu setups that were originally used to capture the data right along with the data.
- The 3 1/2 inch flexible disc provides a convenient method of saving and transporting information.
- Use 'start' and 'stop' disc commands in the monitor and simulate menus to continuously and selectively store data on the disc while running.
- If you don't have the optional memory board, you can use the **Next Segmt** and **Prev Segmt** in the examine data menu to scroll through data files that are too large to be completely loaded into the 32 Kbyte buffer.

The Optional Extended Memory Plus Memory Board (Option 002)

The optional memory board significantly increases the capability of the HP 4952A.

- The optional memory board contains 768 Kbytes of volatile data storage. Operation is essentially transparent to the user.
- In addition to the 768 Kbyte extended capture buffer, the optional memory board also contains 128 Kbytes of nonvolatile RAM disc for storing menus, extended menus, and application programs. The RAM disc is selected with the **MSD = RAM**. Operation is then essentially the same as using microfloppy discs.

www.valuetronics.com

The Mass Store Menu

The Mass Store Menu is used for operations with the disc and optional memory board. The following softkeys appear when you press **Mass Store** in the Top Level Menu:

MSD= RAM	Dir	Load	Store	Del- ete	Re- cover	MORE
For mat	Pack Disc			Re- name	Print Dir	MORE

MSD=RAM

The **MSD=RAM** and **MSD=Disc** softkeys alternate. Press this softkey to select the mass store device, either the microfloppy disc or the 128 Kbyte RAM disc on the optional memory board. When the selected mass store device is the RAM disc, the **MSD=Disc** softkey is available. **MSD=RAM** appears only when the Optional Memory Board is present. Space available on the option memory board will show 126 Kbytes when empty.

Directory

The directory **Dir** operation lists the disc contents, giving File Name, File Type, and a Comment field. Six file types are possible.

Data	Buffer data only.
Menu	Consists of menus only (setup, monitor, simulate, BERT).
Menu & Data	Both buffer data and menus (setup, monitor, simulate, BERT).
Ext Menu	Consists of the same menus as the "menu" type, plus remote, printer, filter, and BERT results. Also stores menus which have External NRZI or X.21 protocols selected.
Applic Progm	Only HP 4952A application files can be loaded.
Undefined	This type of file indicates either that the application supporting this filetype is not loaded on the HP 4952A, or that the undefined file is from some other non-supported instrument.

www.valuetronics.com

Note Identical file names may coexist if the file types are different. Undefined files cannot be restored or renamed once they have been deleted.

The cursor keys can be used to scroll through the files on the directory.

Format

Pressing the Format key and Execute key initializes the disc, erases the disc directory, and places a new format on every track of the disc. Use this softkey to erase an entire disc and initialize new discs. The formatting process takes about 45 seconds.

The discs can be read by an HP series 200 computer but discs formatted in a series 200 cannot be written to during run-time on an HP 4952A.

Load

Pressing the Load key and key and Execute key effects a read-from-disc and write-to-RAM action. When the disc drive is being accessed the yellow indicator light is on.

File names may be entered from the keyboard or by moving the cursor to the file name before pressing the Load softkey.

Store

Pressing the Store key and then Execute causes a read-from-RAM write-to-disc action. When the disc drive is being accessed the yellow indicator light is on.

File names may be entered from the keyboard or by moving the cursor to a file in the directory before pressing Store and then modifying the name. File type must be specified. An optional comment field is provided to aid identification of the file.

Caution Any file marked DEL in the directory can be overwritten by the store function and is therefore not recoverable.

www.valuetronics.com

Delete

Pressing the Delete key and Execute key marks files for removal from the disc. The file is marked for deletion in the directory (a Del in the right most columns) but is actually not deleted until Pack Disc and Execute is pressed.

To delete all files on a disc, mark each file for deletion and press Pack Disc and Execute or press Format Execute and reinitialize the disc. If a disc is full with one (or few) files the fastest way to delete the contents of the disc is press Delete , Execute , Pack Disc , Execute .

File names may be entered from the keyboard or by scrolling to the file name using the cursor arrow keys before pressing the Delete key and then modifying the name.

Caution Undefined files can not be restored or renamed once they have been deleted.

Recover

Pressing the Recover and Execute softkeys allows files marked for removal from the disc to be 'restored' as valid active files in the directory. Only files created on a HP 4951C or HP 4952A disc series protocol analyzer may be recovered.

Enter each filename from the keyboard or by scrolling to the filename using the cursor arrow keys before pressing the Recover key and then the Execute key and modifying the name. This can only be done before the disc has been packed. Undefined files cannot be recovered.

Pack Disc

Pressing the Pack Disc softkey and then Execute rearranges the files on the disc to accommodate lost space due to deleted files or when run-time files are created.

This process allows you to regain disc space and use the disc more efficiently.

Caution Once the pack disc operation has been completed there is no way to recover the purged files.

---

www.valuetronics.com

Rename

Pressing the Rename and Execute softkeys allow you to rename a file or change the comment associated with a file. Undefined files cannot be renamed.

Print Directory

Pressing the Print Dir and Execute softkeys allow you to print the directory if an ASCII printer is connected.

Note When a Mass Store operation results in an error message, remove the disc and reinsert it before attempting additional disc operations.

---

www.valuetronics.com

Loading From Disc

To load data from the disc:

- Insert the disc into the disc slot.
- Press Dir in the Mass Store menu to see how the file is listed on the disc.
- Move the cursor to the file name (as it is listed in the directory).
- Press the Load key.
- Press Execute to load the file into the buffer.

Menus May Be Changed After Loading

If the file type is 'menu, 'menu & data', or 'extended menu', the current analyzer menu setups will be changed by the load operation. The setup, monitor, simulate, and BERT setups are all modified to the new values. When you load 'extended menu' types, the remote, printer, and data filter menus are also changed. Any menus which you wish to save must be stored to disc before the load operation.

Caution Do not perform the load operation if you want to save present menu setups.

Loading Files Larger Than the Buffer

When loading a disc file that is too large for the buffer the softkeys Next Segmt and Prev Segmt are automatically displayed in the Exam Data menu. You can scroll through the rest of the file by using these softkeys. These softkeys scroll through the file in 16 Kbyte segments (1/2 the buffer size). Use these softkeys when running monitor programs on data files that are too large for the buffer.

www.valuetronics.com

Autostart Files

Autostart is a feature that uses a disc file called 'AUTOSTART.' When the HP 4952A is turned on with a disc installed, the first file on the disc called AUTOSTART is loaded and executed if possible. You can turn on the HP 4952A and have it automatically monitor a line, simulate, or execute an application.

The run mode (i.e., monitor, simulate) used by the AUTOSTART file will be the last run mode operation performed before storing the AUTOSTART file. To make the autostart program execute correctly, run it first and then store it to a disc with the name AUTOSTART. For example, to automatically monitor a line, write the monitor menu, execute Monitor Line in the Run menu and then store the monitor menu to disc with the file name AUTOSTART. Do not use a run mode of Monitor Buffer (there is no data in the buffer at power-up) and do not use the file name AUTOSTART for data files (data files are not executable). The following file types can be used with the autostart feature:

Menus	Load and execute the menu
Extended Menus	Load and execute the extended menu
Menus & Data	Load and execute the menu, load the last data
Application	Load and execute the application

Some things to consider when using AUTOSTART:

- Buffer data may be lost when autostart executions begins.
- To prevent the HP 4952A from autostarting, remove the disc before turning it on.
- Remote slave operations will fail until the autostart operation is complete.
- Disc errors when attempting an autostart are displayed at the bottom of the display.
- Autostart cannot be used from RAM files.

www.valuetronics.com

Storing To Disc

To write data and store to disc:

- Insert and format the disc if it is blank (do not format if the disc contains files you wish to save).
- Press Store .
- Enter the filename, the file type, and an optional comment.
- Press Execute . If the disc has insufficient room for a file, 'Disc Full' is displayed.

What You Can Store To Disc

You can store the following type of files:

- Data
- Menu
- Menu & Data
- Application Program
- Extended Menu

When you select 'menu' or 'menu & data' as the file type, the menus saved are setup, monitor, simulate, and BERT setup. When you select 'extended menu' as the file type, the remote, printer, and data filter menus are also stored. 'Extended menu' also stores menus which have External NRZI or X.21 protocols selected. Highlights are not saved on disc.

www.valuetronics.com

Storing Data Directly From the Line

To store directly to disc while monitoring on line, use 'start disc' and 'stop disc' instructions in the monitor and simulate menus.

For example:

```
Monitor

Block 1
Start Disc
```

If the disc becomes full, it will stop and the message 'Disc Full' appears. If the disc cannot keep up, 'Buffer Overflow' is displayed.

The Store to disc operation will reclaim space from files that have been deleted. The HP 4952A will try to store to empty sectors at the end of the disc. If there is not enough space at the end of the disc it will look for deleted file space. If there is a large enough hole it will store, if not the message `Disc is full` message will appear. The overwritten file can no longer be recovered.

www.valuetronics.com

The Extended Memory Board (Option 002)

If MSD = RAM appears in the mass store menu, your HP 4952A has the Extended Memory Board (option 002). The extended memory board consists of:

- Extended Capture Buffer
- Ram Disc

The Extended Capture Buffer (ECB)

The extended capture buffer increases buffer size to 768 Kbytes. You can look at the extended capture buffer in the examine data menu with the Roll Up, Roll Down, Next Page, and Prev Page softkeys that move you through a displayed 32 Kbyte portion of the ECB.

The 32 Kbyte part of the buffer viewed in the examine data menu acts like a movable window. You can move the window and look at different 32 Kbyte parts of the ECB with the Next Segmt and Prev Segmt keys in the examine data menu. The current 32 Kbyte part of the ECB is nonvolatile and is the only part of the buffer saved after power-off.

The RAM Disc

You can select the RAM disc, rather than the microfloppy disc, by using MSD = RAM in the mass store menu.

The RAM Disc consists of 128 Kbytes of nonvolatile memory you can use in the same way as you would the microfloppy disc to load and store applications, menus, and extended menus. Operation of the RAM disc is essentially the same as it is for the microfloppy disc.

Applications that are too large to fit in the normal application space automatically overflow into the RAM Disc area.

www.valuetronics.com

The RAM Disc

The RAM disc is the 128 Kbyte nonvolatile portion of the optional extended memory board. The RAM disc is activated when you press MSD = RAM in the mass store menu. Operation of the RAM disc is the same as operation of the disc drive.

By saving commonly used menus and applications on the RAM disc, rather than on microfloppy discs, the information is instantly available.

Select the RAM Disc

MSD = RAM appears in the mass store menu when an extended memory board is present. This softkey selects the 'mass store device' to be used. To use the disc drive, select MSD = Disc. To use the RAM disc, select MSD = RAM.

Using the RAM Disc

Operation of the RAM Disc is the same as operation of the disc drive. You can load and store menus, applications, and extended menus. Like flexible disc storage, the RAM Disc is also nonvolatile and stored information remains after power-off. Space available is given in sectors for the disc drive; space available on the RAM disc is shown in Kbytes.

www.valuetronics.com

The Extended Capture Buffer

The extended capture buffer is the portion of the optional extended memory board that provides 768 Kbytes of buffer data storage. Operation of the ECB is mostly transparent to the user. During monitoring on-line or simulating, data is continuously loaded into the extended capture buffer the same way it is loaded with the standard 32 Kbyte buffer.

Summary Of Facts About the ECB

- Like the standard 32 Kbyte buffer, the ECB stores only data.
- Total buffer storage is 768 Kbytes.
- Of the total 768 Kbytes, 736 Kbytes is volatile, data is lost at power-off. The remaining 32 Kbytes is nonvolatile, data is retained after power-off.
- The non-volatile 32 Kbyte portion of buffer is movable. You can select which part of the total 768 Kbytes is saved after power-off. This 32 Kbyte window can be moved with `Next Segmt`, `Prev Segmt`, `Specify Block`, and `Next Hilit` in the examine data menu. After power-off, all data in the 768 Kbyte buffer is lost except for that contained in the current 32 Kbyte window.

Loading the ECB

There are two ways to load data into the ECB:

1. Monitor on-line or simulate. Operation is the same as for the standard 32 Kbyte buffer.
2. Load the ECB from a disc file. Operation is the same as the standard 32 Kbyte buffer except data files that take up an entire microfloppy disc, 613 Kbytes, can now be loaded entirely into the ECB.

www.valuetronics.com

Storing To Disc From the ECB

Operation is the same, whether the mass store device (MSD) is micro floppy disc or RAM:

1. In the mass store menu, press Store and type in a file name.

2. Select Data or Menu & Data as the file type.

3. Press Execute .

4. Press either Current Segment or Until End . Pressing Current Segment loads the present 32 Kbyte window onto disc. Pressing Until End loads the everything from the beginning of the current 32 Kbyte window until the end of the 768 Kbyte buffer, or until the end of the disc is reached. To store from the start of the buffer, position at block 1 in the Examine Data Menu.

   Remember, the 32 Kbyte window can be moved with the Next Segmt , Prev Segmt , Specify Block , or Next Hilit in the examine data menu.

Printing from the ECB or Disc

The entire contents, up to 9999 pages, of the ECB or a disc data file can be printed if an ASCII printer is attached to the analyzer. With the ECB full, or partially full, you can print the entire contents, or partial contents, of the buffer (see Chapter 13, "ASCII Printer Output").

www.valuetronics.com

Memory Blocks and Disc Sectors

Memory in the HP 4952A is divided into blocks. Two Kbytes of data can be stored in each block.

Storage on your disc is divided into sectors. A blank initialized disc has 2452 sectors. Each sector holds 256 bytes. Each block of data you store on disc takes eight sectors.

A header is appended to everything that is stored to disc. A header takes one sector.

Here is a summary of how many sectors are taken up when things are stored.

Menus	33 Sectors
Extended Menus	37 Sectors
Run Data	33 Sectors (header & menu), plus data
Data	1 Sector for header, plus data

www.valuetronics.com

The Disc Drive

Caution Always install the transportation disc in the disc drive when transporting or shipping the HP 4952A. The transportation disc prevents damage to the disc drive from bumps and vibration that may occur. The warranty may be voided if the transportation disc is not used during transit.

Type Of Discs

The HP 4952A disc drive uses 3 1/2 inch, double-sided, double density flexible discs. Specify part number HP 92192A to order a set of ten discs.

Care and Handling Of Discs

Discs require a clean, dust-free environment. To avoid damaging your discs and losing information, follow these rules for handling and caring for your flexible discs.

1. Make certain the shutter (the metal guard) is closed when the disc is not in use. The shutter protects the disc from dirt, fingerprints, and scratches.

2. Use discs in a clean environment. Avoid getting smoke, dust, eraser particles, salt air, food crumbs, hair, or fingerprints on your discs.

3. Keep discs stored upright in a cool, dry place. The storage temperature range for discs is 4^0C to 53^0C (39.2^0F to 127.4^0F) with a relative humidity between 8% and 90%. Heat and moisture can damage your discs.

4. To avoid losing important information, copy and backup your discs frequently.

5. Do not put discs near anything that generates a magnetic field, such as a telephone, magnetic paper clip holders, or appliances with motors.

6. Do not touch the disc surface.

7. Do not try to clean the disc. The plastic jacket contains its own cleaning device.

www.valuetronics.com

Cleaning the Disc Drive

The disc drive does not need routine preventive maintenance, however, as with any mechanical device it can get dirty. A dirty disc drive usually means dirty heads that can cause excessive read errors from a disc.

To clean the heads of the HP 4952A use a head cleaning disc (HP part number 09122-89415) as follows:

- Turn the analyzer off and remove any floppy discs that are in the disc drive.
- Turn the analayzer on and reset the menus.
- Press MORE and then Mass Store .

Note The message Disc Out will blink on the screen indicating there is no disc in the drive.

- Insert the cleaning disc in the disc drive.
- Press Dir to activate the cleaning process.

An on-screen message indicates the cleaning disc is a single-sided disc. The disc drive light will be on during the process.

www.valuetronics.com

Inserting a Disc

Hold the disc, label side up and the metal shutter pointing toward the drive. Insert the disc firmly but gently into the disc slot until the disc touches the back of the slot. Continue pressing until you hear a click and the disc is pulled down into the drive (see Figure 12-1).

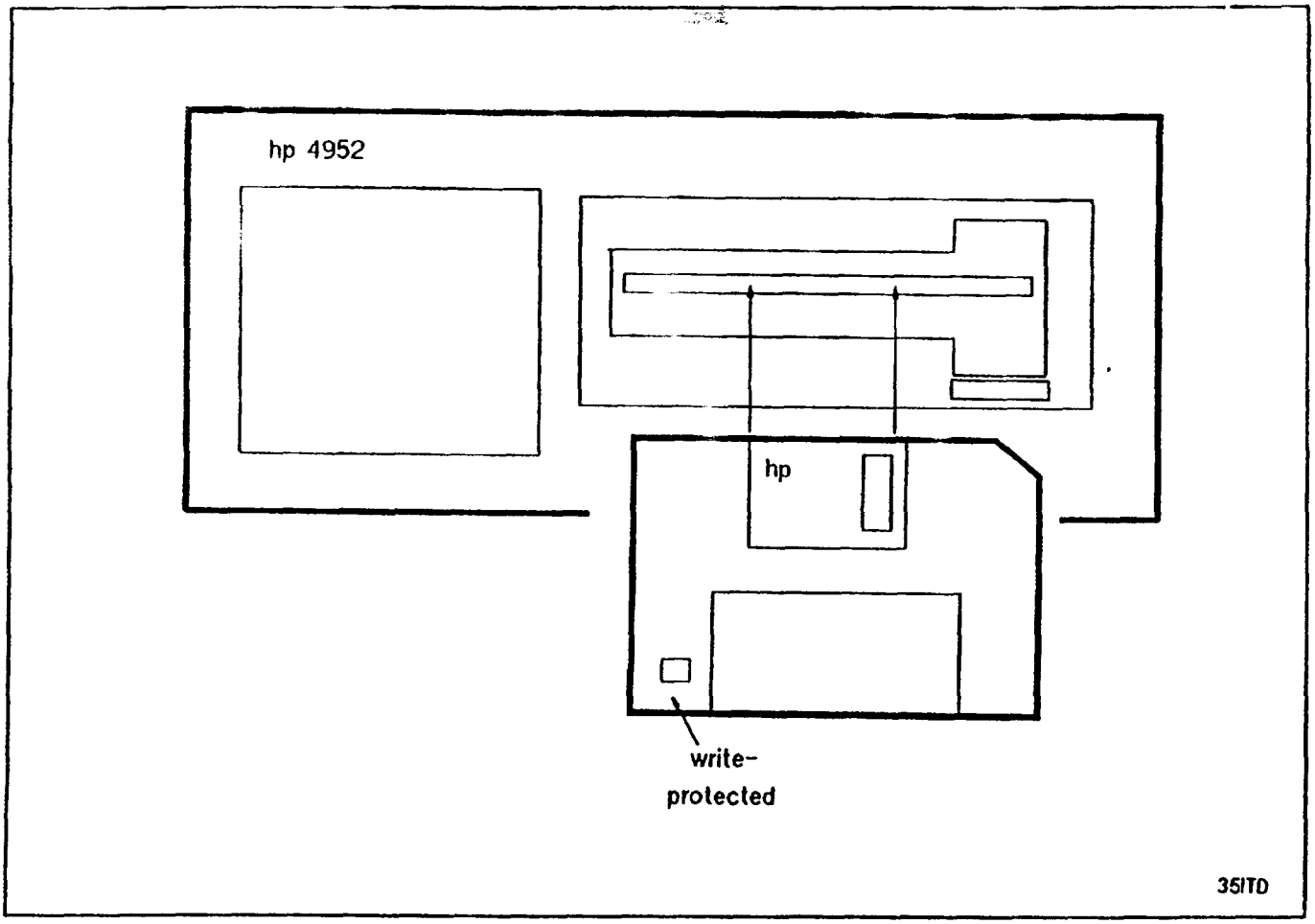

Figure 12-1. Inserting the Disc

Removing a Disc

To remove a disc from the disc drive, press the gray button just below the drive. The disc will pop out part of the way. Pull the disc straight out. Check to see that the metal shutter is closed before you put the disc away.

www.valuetronics.com

Write-Protecting a Disc

You can protect data on a disc to ensure that no one can inadvertently write over or delete the information on the disc. To write-protect a disc (see Figure 12-2):

1. Turn the disc over so you are looking at the back.
2. Place the tip of a pen in the small hole at the top of the write protect tab.
3. Slide the tab until it locks into place. The tab will no longer be visible.

You may load (read) from the disc with the protect tab in either position.

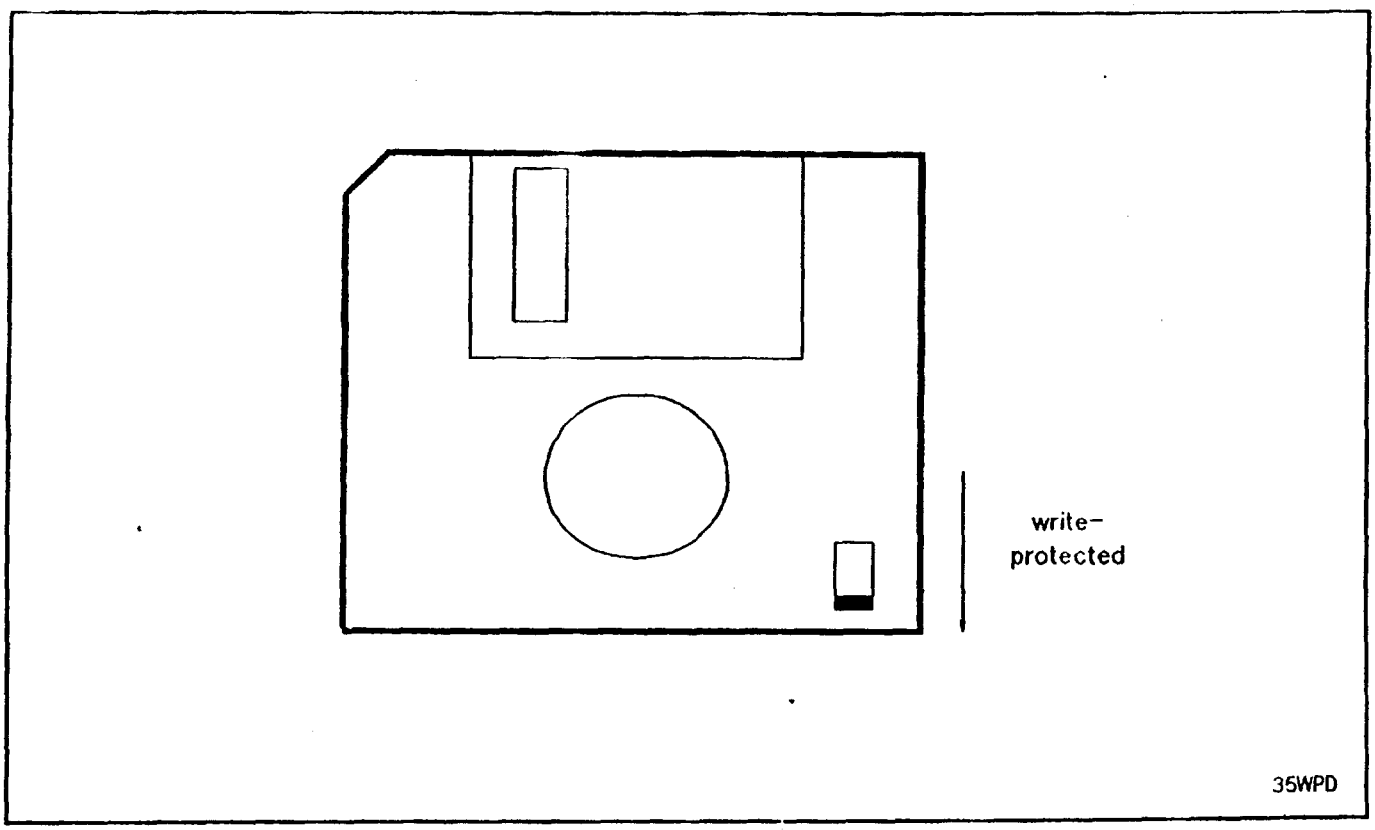

Figure 12-2. Write Protecting Your Disc

www.valuetronics.com

Copy Disc Utility

The Copy Disc utility is a file on the Utility Disc that is supplied standard with the HP 4952A. If the Utility Disc does not have this application, order one through your HP sales and service office. You must load this utility onto the HP 4952A before you can access the Copy Disc menu. See "Loading from Disc" section in this chapter for software installation instructions. After loading the Copy Disc utility, the Top Level Menu will look like Figure 12-3.

Note The Copy Disc utility requires that you have the optional Extended Memory Plus memory board (Option 002) installed.

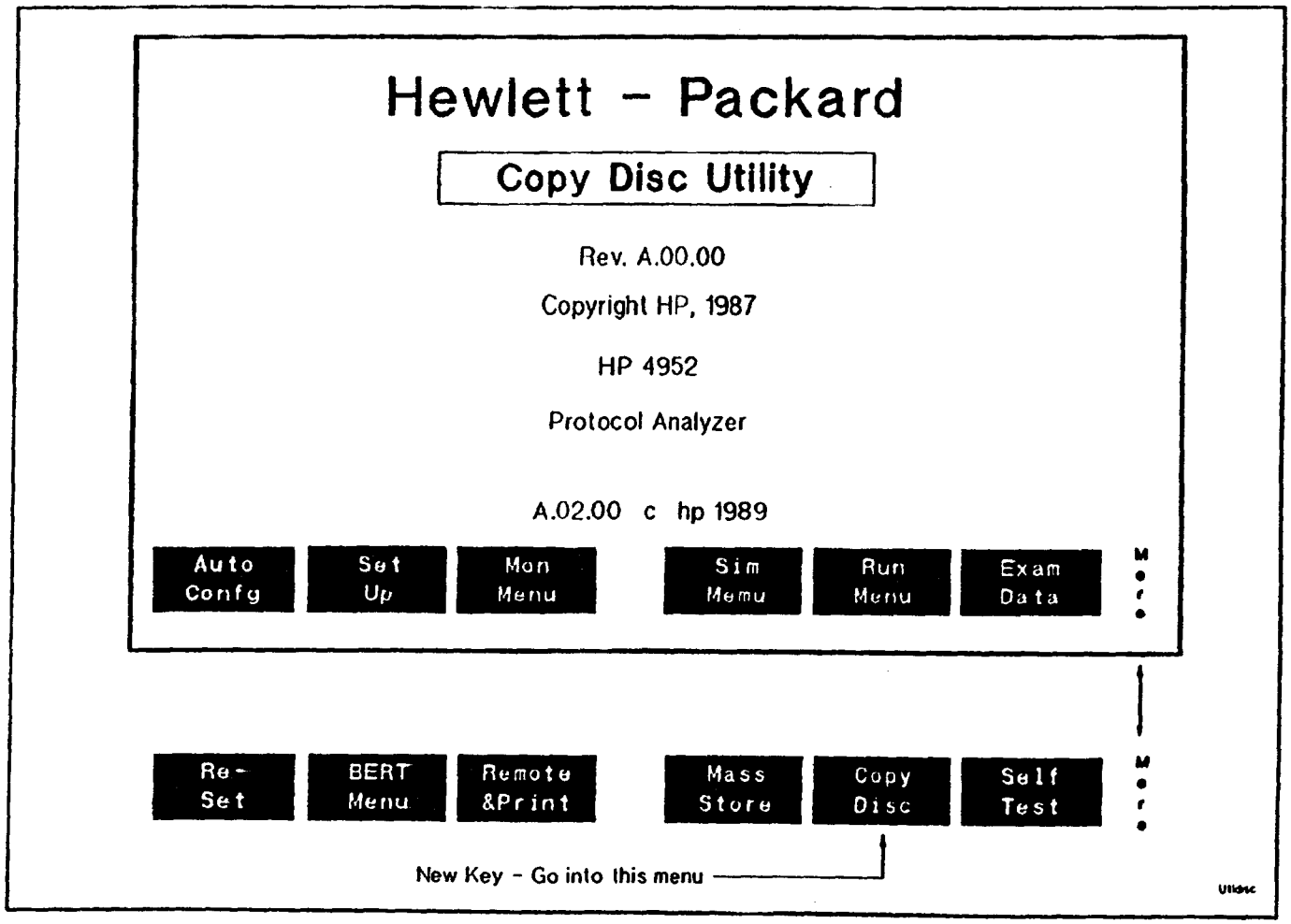

Figure 12-3. Utility Disc Main Level Display

www.valuetronics.com

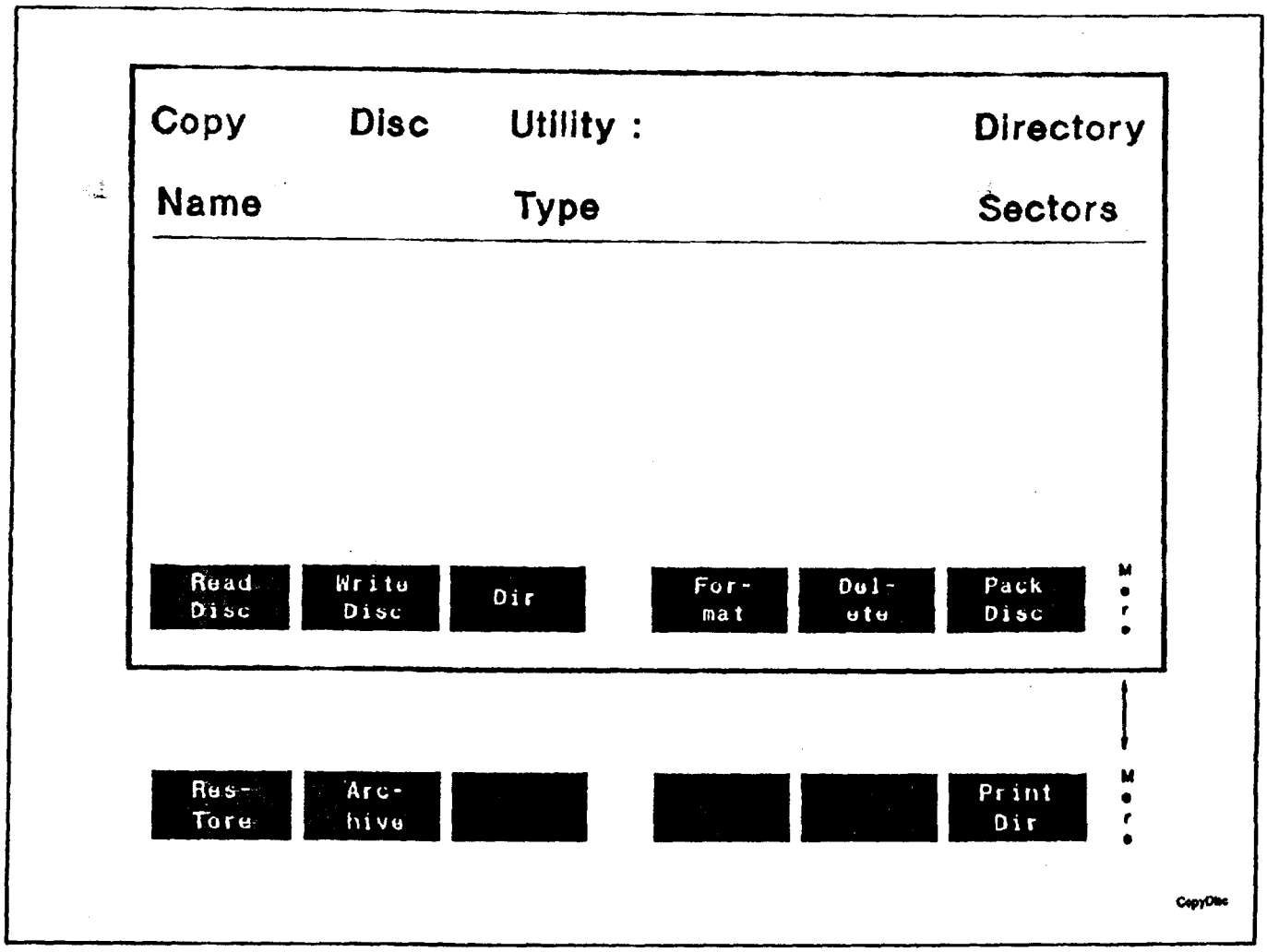

Figure 12-4. Copy Disc Utility Keys

Copying Discs

Press the new key called Copy Disc to get the display shown in Figure 12-5. The Copy Disc command allows you to duplicate your flexible discs. This utility creates an image copy of the source disc to the destination disc(s).

Note Some software applications are not reproducible. They will appear to be copied, but will be non-executable. When you try to load this type of application, the HP 4952A will display the error message 'Application Denied'.

---

www.valuetronics.com

Caution Any previous information on the destination flexible disc will be destroyed during the Copy Disc operation.

Before starting the Copy Disc utility, make sure you are copying to a formatted empty disc. If the disc is formatted and contains information, it will be overwritten by the copy disc utility `Write Disc` command.

Press the `Read Disc` key and the display prompts you to install a source flexible disc. After installing the source disc, press the `Execute` key. This will take approximately one minute to read the disc. Then remove the source disc and install the destination disc. Press the `Write Disc` key, and then press the `Execute` key to complete copying the disc. The copy will take approximately one and a half minutes to complete if there are no applications already on the disc, or two and a half minutes if the are applications on the disc.

Once the source disc has been loaded, you can make many copies of the source disc. Just insert each destination disc in the disc drive and press the `Write Disc` key, and then the `Execute` key.

Archiving All Contents Of RAM Disc To Flexible Disc

The RAM disc is part of option 002. It is 128 Kbytes of non-voltile memory space used for menus, setups, and applications.

You may perform an Archive (disc image) to backup your RAM disc to a flexible disc. A disc image is a full reproduction of the RAM disc contents.

The file created on the flexible disc will be a unique file type labeled 4952A Archive. This file type consists of a header sector and an image copy of the RAM disc. This file will only be restoreable using the Copy Disc utility `Restore` command because of its unique file type.

Press the `Archive` key and the display prompts you to specify a file name and optional comment. Then press `Execute` to perform the `Archive` function.

www.valuetronics.com

Restoring the Archive File on Flexible Disc to RAM Disc

The Restore command copies the archive contents on your flexible disc to the RAM disc. All existing files in the RAM disc memory will be deleted and replaced with the archive contents. The entire 2 bytes of RAM disc directory space will be overwritten, regardless of the number of files actually stored in the archive file.

Press the Restore key and the display prompts you to specify the archive file name to be restored. Press Execute to perform the Restore function.

Directory

Press the Dir softkey and display the directory for the installed flexible disc. This item is identical to the Mass Storage utility Directory command.

Delete

Press the Delete softkey allows files to be marked for removal from the flexible disc. Files to be deleted may be entered from the keyboard or by scrolling to the file name with the arrow keys and pressing Delete . The file is marked for deletion in the directory (a Del in the right-most column) but actually is not deleted until a Pack Disc or Store command writes over the data.

This function is identical to the Mass Store utility Delete command.

Deleted files can be recovered in the Mass Store menu using the Recover key if the Pack Disc command was not invoked.

www.valuetronics.com

Format

Pressing the Format softkey invokes a format function on the installed flexible disc. Reformatting a flexible disc will destroy any contents on that disc.

This function is identical to the Mass Store utility Format command.

Pack Disc

Pressing the Pack Disc softkey deletes all files that have been marked by the Delete key, and increases the available disc space. Files deleted using the Pack Disc command are not recoverable.

This command is identical to the Mass Store utility Pack Disc command.

Print Directory

Press the Print Dir softkey to print the directory contents displayed on the screen if there is an ASCII printer attached to the analyzer.

www.valuetronics.com

13

ASCII Printer Output

- Introduction
- Hookup
- Setup
- Getting Things Printed
- Printed Output
- How the Printer Displays Characters
- Print Error Messages

www.valuetronics.com

Introduction

The ASCII printer output lets you print buffer data, monitor and simulate menus, timer and counter results, remote and print menus, and disc directories. HP 4952A display information can be sent to a printer via the Remote/Printer (RS-232C/V.24) connector on the rear panel.

To use this feature, you need an ASCII Printer such as the HP 2601A, HP 2934A or ThinkJet Printer (HP 2225D), and possibly a properly wired modem eliminator cable depending on your printer's needs (HP 13242G).

Hookup

Connect the ASCII printer to the Printer/Remote connector on the rear panel using the HP 13242G cable (see Figure 13-1).

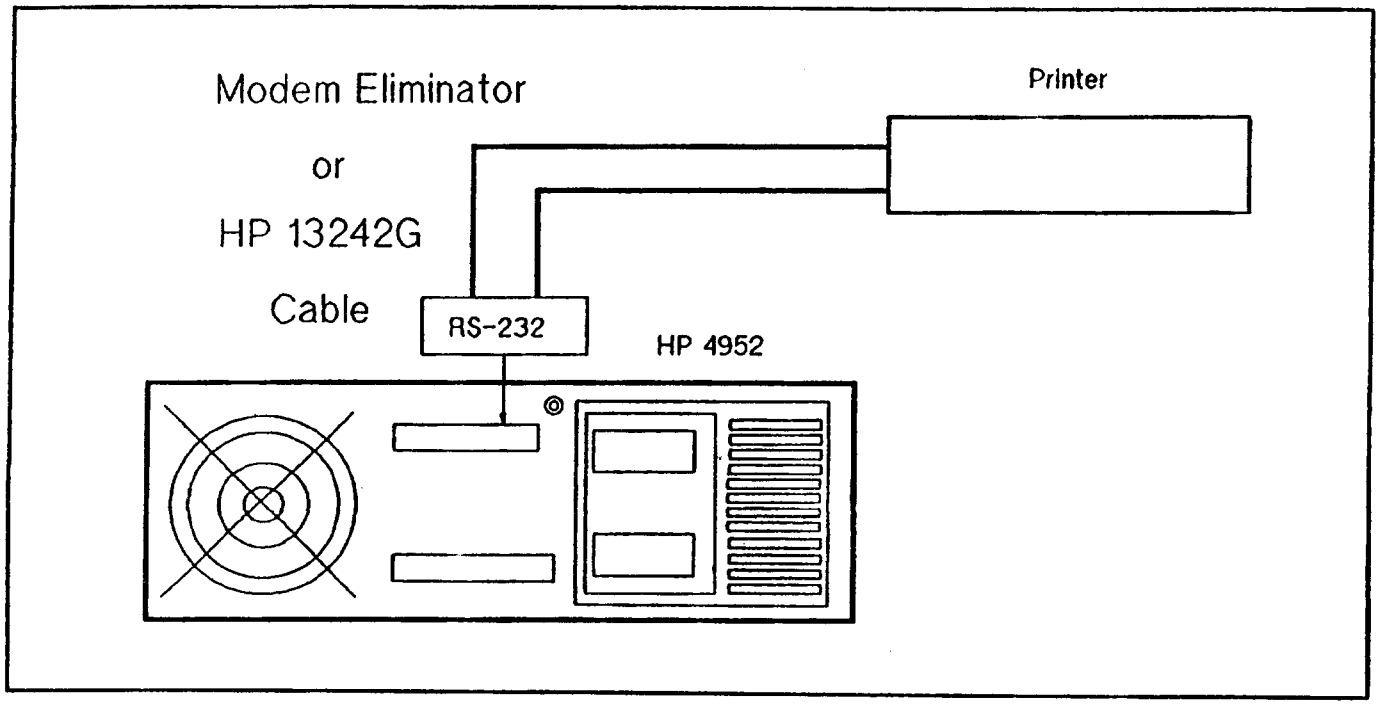

Figure 13-1. Connecting the Printer

www.valuetronics.com

Setup

To setup your 4952A for printing, press **Remote & Print** in the Top Level Menu and then press **Print Setup** . Place the cursor at the point where you want to begin printing and set the correct parameters for the printer. You must know the correct settings for your ASCII printer.

Note If you are using an HP 2225A ThinkJet printer, set all switches to 0 to get a complete copy of a lengthy printout. If the switches are not set to 0, some blocks of data will not be printed.

Character Code

Select either ASCII 8 or ASCII 7.

Parity

Select none, even, or odd.

Bits/sec

You can send data to the printer at any one of the speeds shown on the softkeys.

Handshake

You must set the Handshaking method. You can specify ENQ/ACK, XON/XOFF, or Control Lead. Set the characters by typing in the characters from the keyboard. Type in control characters, shown on the keycaps, by pressing CNTL simultaneously with the control character.

Line Terminators

Type in the line termination characters expected by the printer. Two characters may be specified, blanks are ignored. The standard sequence of a carriage return and line feed is the default.

www.valuetronics.com

Carriage Return Delay

Sets the delay after a carriage return in milliseconds. This field defaults to zero, but some printers require a delay to avoid a loss of characters.

Enquire/Acknowledge (ENQ/ACK) Hand Shaking

In ENQ/ACK handshaking the HP 4952A inquires whether the printer is ready to receive characters. The HP 4952A sends an ENQ character (usually 05 hex) to the printer after each block of 33 characters. The printer must acknowledge the enquiry in order for printing to proceed. The printer does not respond to an ENQ until it is able to accept more characters into its buffer. When it is ready, the printer responds by sending an ACK character (usually 06 hex) to the HP 4952A. The ENQ and ACK characters may be different for various printers. You can specify the characters to be used in the Printer Menu. The ACK must occur within 60 seconds of the ENQ or the HP 4952A reports a hand shake error.

XOn/XOff Hand Shaking

XOn/XOff handshaking is initiated by the printer. When the printer is unable to continue receiving characters, it sends an XOff character (usually 13 hex) to the HP 4952A. The HP 4952A then suspends transmission until the printer sends an XOn character (usually 11 hex). Some printers use a second XOff character (usually 15 hex). One XOn character and two Off characters can be specified in the printer menu. The XOn must occur within 60 seconds after the XOff or an error occurs and displays the message 'Hand Shake Error.'

Control Lead Hand Shaking

The HP 4952A waits for CTS to become active for 60 seconds after it causes RTS. If CTS does not change an error occurs with a hand shaking error.

www.valuetronics.com

Getting Things Printed

When the print setup menu has been properly filled out, you can get printouts by pressing the Print keys that are found in most of the HP 4952A menus. Here is a summary of where the print keys are and what they do.

Setup Menu	Prints all setup parameters from the setup menu (13 lines).
Monitor Menu	Prints the entire monitor program.
Simulate Menu	Prints the entire simulate program.
Data Filter Menu	Prints the data filter menu (first 13 lines).
Examine Data Menu	Print Sum. Prints the Timers and Counters summary page (first 14 lines). Print Data Prints the selected number of pages (screenfuls of data) of data beginning at the current page.
BERT Menu	Prints the BERT setup menu (first 13 lines).
BERT Results	Prints the BERT test results display (first 13 lines).
Remote Menu	Prints the slave, controller or print setup menus (first 13 lines).
Mass Store Menu	Prints the file directory with the comments.

You can manually terminate a print cycle by pressing EXIT.

www.valuetronics.com

Printed Output

The printed output reflects the display exactly. No extra spaces are inserted and no abbreviations are expanded. Lines are 32 characters long unless the displayed line is completely in inverse video, in which case an asterisk is appended to the end of the line (DCE). It is not possible to print inverse video or half-bright video.

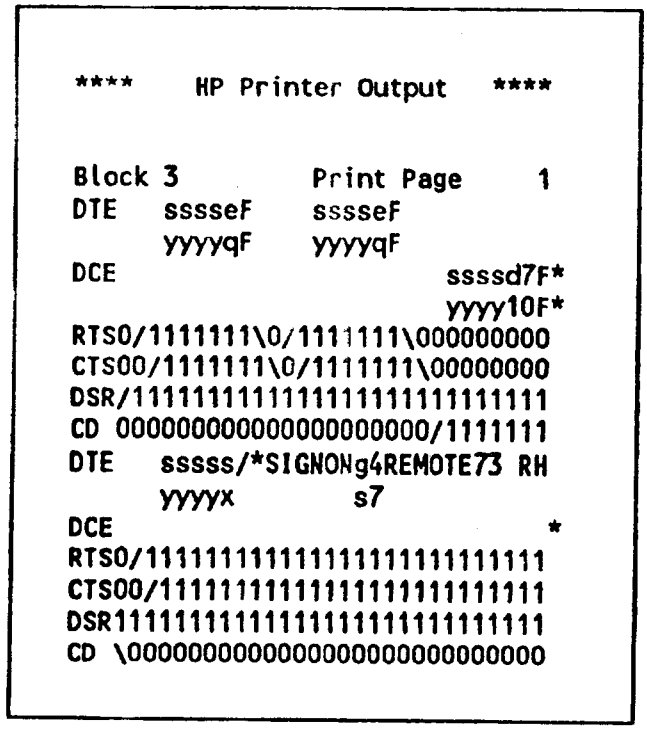

Figure 13-2. Printed Output in Data & State Format

Data is printed in 'display' pages or screen size. At the top of each page, the block number and the 'display' print page number are printed (see Figure 13-2).

Note Sometimes displayed data overlaps with data on the previous screen. This data is removed before being printed.

www.valuetronics.com

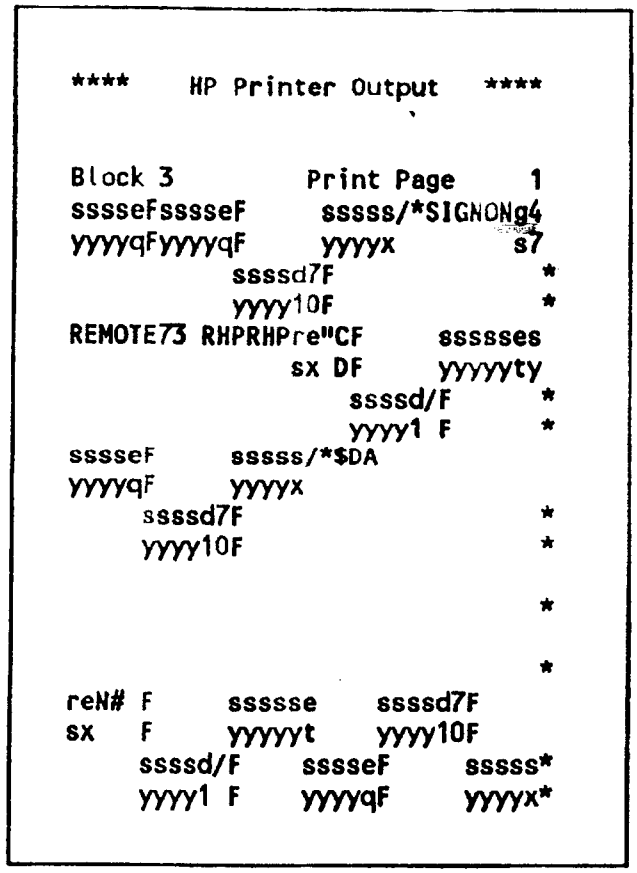

Figure 13-3. Printed Output in 2 Line Format

Printing the Entire ECB

You can print the entire contents or partial contents of the ECB or disc files. You must specify the number of pages up to 9999.

To print the contents of the ECB:

1. Press Examine Data and enter the Examine Data menu.
2. Press MORE two times and locate the Print Data softkey.
3. Using the arrow movement keys, position the beginning data on the top line of the screen.

www.valuetronics.com

Note Printing will begin at the top of the displayed page, regardless of the location of the cursor. Position the data you want to start printing on the top line of the displayed page.

4. Enter the number of pages you want printed. If you want to print the entire buffer contents enter 9999.

5. Press **Execute** . As the data is being printed, sent to the printer buffer, the display will show the current print page.

Note If printing from disc without an ECB, do not remove the disc during the print operation.

6. Press EXIT at any time to stop printing.

There is a delay from the time data is displayed until it is actually printed. If you see the data you want printed scroll across the screen, you can press EXIT to stop print execution. By the time the print cycle stops, your desired data will have been printed.

Data segments with no data to print will be printed as blank pages to verify that no data was missed.

How the Printer Displays Characters

The output format for the ASCII printer is the same as for the HP 4952A display except:

- All hex codes are in upper case. All ASCII control characters are in lower case. All other sequences are: top character upper case, and lower character lower case.
- All characters that have no ASCII representation are printed in hexadecimal mode.

www.valuetronics.com

Hexadecimal Characters

Hexadecimal characters are printed in upper case, with the most significant digit over the least significant digit. For example, B7 hex is printed as:

```
B
7
```

ASCII Control Characters

ASCII control characters are printed in lower case with the same mnemonics as displayed except they are printed on two lines. For example, an ASCII acknowledge is printed as:

```
a
k
```

Lines that are in total inverse video on the display have an asterisk printed at the end of the line. This is useful for differentiating between DCE and DTE data.

Special Characters

Don't Care	x x	Undefined Character	? ?
Start Flag	S f	End Flag	E f
Good FCS	GG gg	Bad FCS	BB bb
Abort	AA aa	Don't Care FCS	XX xx
Highlighted Timer	H t	Discontinuity	D c

www.valuetronics.com

14

Async Terminal Emulator

- Introduction
- Loading the Terminal Emulator Application
- Terminal Setup
- Terminal Operation

www.valuetronics.com

Introduction

The Asynchronous Terminal Emulator application lets you use the HP 4952A as an asynchronous terminal. When the application is loaded, the new softkey VT-100 appears. This softkey accesses the Terminal Setup menu.

Equipment Supplied

The terminal emulator application is on the HP 4952A Utility disc. A second disc is provided so that the master copy of the Utility disc can be backed-up.

Applications

The terminal emulator application is very useful in the field service environment where a terminal is needed.

Often intelligent devices must be configured with an asynchronous terminal. For example, some statistical multiplexers must be configured through an asynchronous terminal connected to them. The terminal emulator application is very useful for this purpose. The terminal emulator application can also be used to pinpoint problems to a terminal. Simulate menus can be run from the terminal emulator to troubleshoot and pinpoint the problem.

There are cases where the terminal emulator is used to establish a connection, and then perform a test over that connection. In some cases, if the DTR/DSR lines drop, the connection is lost. These lines are maintained while going between terminal mode and running a Simulate menu.

www.valuetronics.com

Specifications

Specifications are as follows:

Physical Interface	-	RS-232C/V.24 (DTE or DCE)
Data Codes	-	ASCII 7, ASCII 8
Parity	-	None, Odd, Even, Space, Mark, Ignore
Data Rates	-	up to 19.2 kbps
Handshake	-	None, Enq/Ack
Error Handling	-	None (Parity errors flash)
Stop Bits	-	Transmit - 2 Receive-at least 1 bit

Loading the Terminal Emulator Application

To load the application:

1. Insert the HP 4952A Utility disc in the disc drive.
2. Press MORE, then `Mass Store` .
3. Place the cursor over the file name VT100, then press `Load` .
4. Press `Execute` to load the terminal emulator application program. When the application is loaded, it will revert back to the Top Level Menu.

www.valuetronics.com

Terminal Setup

When the application is loaded, a new softkey appears in the second level of the Top Level Menu called VT-100 .

By pressing VT-100 , the Terminal Emulator menu is accessed. The Terminal Emulator menu has four softkey choices: Setup Menu , Setup=Sim , Simulate , Execute .

Setup Menu

Press the Setup Menu softkey to access the Terminal Setup menu. Shown below are the default parameters.

Data code	ASCII 8
Parity	None
Bits/sec	1200
Mode	DTE
Handshake	None
Echo	On
Bell	On
Display Functions	Off
Auto LF after CR	On

The above setup parameters must be known before the terminal emulator can be used effectively.

Note Incorrect parameter choices will not result in damage to the system, only the inability to use the terminal emulator.

Use the cursor arrow keys to move to the appropriate parameter field and select the the desired parameter softkeys.

Data Code Field

The softkey selections for the Data Code field are ASCII 8 and ASCII 7.

www.valuetronics.com

Parity Field

The softkey selectionss for the Parity field are None, Odd, Even, ASCII 7 space, ASCII 7 mark, and Ignore.

Bits/sec Field

The softkey selections for the Bits/sec field are:

300	1200	2400	4800	9600	19200
110	200	600	800	3200	3600
50	75	2000	134.	150	7200

Mode Field

The HP 4952A can be put into the DTE (Data Terminal Equipment) or DCE (Data Communication Equipment) mode. This removes the need for a modem eliminator. If running a Simulate menu, the menu must be the same, i.e., Simulate DTE or Simulate DCE

Handshake Field

You can select either ENQ/ACK, or none. For more information on handshaking, refer to the "Software Handshake" section.

Echo Field

The HP 4952A can be configured with local or remote echo. If the main computer in the system echoes back each character received (remote echo), the local echo should be turned Off or double characters will appear on the HP 4952A display.

Bell Field

When the system CPU sends a Bell character (BELL) the HP 4952A can be set to beep or disregard the character.

Display Functions Field

Displays control characters.

Auto Line Feed after CR

Automatically inserts a line feed character after a carriage return.

www.valuetronics.com

Setup=Simulate

The parameters from the Monitor/Simulate Setup and Simulate menus an be imported to the Terminal Emulator menu with the Setup = Sim softkey. The following terminal setup parameters are overwritten by this function:

Terminal Parameter	Source
Data Code	Data Code of Monitor/Simulate Setup menu
Parity	of Monitor/Simulate Setup menu
Bits/sec	Bits/sec of Monitor/Simulate Setup menu
Mode	DCE or DTE (first line of Simulate menu)

Simulate

The Simulate softkey executes the Simulate menu over the terminal emulator connection. To stop the execution of the Simulate menu press EXIT. To return to the Terminal Emulator menu press EXIT.

www.valuetronics.com

Execute

Pressing the Execute softkey causes the HP 4952A to go into the terminal mode. When terminal mode is entered for the first time, the display is cleared and the cursor is placed in the top row, far left column.

The terminal emulator softkeys appear at the bottom of the display.

Caps Lock

The first softkey is Cap Lock . An "*" in the softkey label indicates that the softkey is ON.

Clear Screen

Pressing the second softkey, Clr Scrn clears both the top and bottom halves of the screen.

Display Top

Press the Display Top softkey to display the top half of the screen. The display is divided into two half screens. A half page symbol in the lower left corner of the display indicates which half is being displayed. If the symbol is up you are viewing the top half of the display (row 1 through 13).

Display Bottom

Press the Display Bottom to display the bottom half of the screen. The display is divided into two half screen. A half page symbol in the lower left corner of the display indicates which half is being displayed. If the symbol is down you are displaying the bottom half of the display (row 12 through 24). Note the overlap of halves.

Hex Entry

Press the Hex Entry softkey and enter hexadecimal characters through the terminal emulator. An "*" in the softkey label indicates that the softkey is ON.

Break

Press the sixth softkey, Break to signal an interrupt of computer operations. It is a space condition (logical 0). A break is sent for 500 milliseconds. The shortest break possible is 6 milliseconds.

www.valuetronics.com

Terminal Operation

If local echo or remote echo (echo from main office computer) is in effect, characters appear on the display as they are typed.

The VT-100 display is 24 rows by 128 columns, of which 32 columns are displayed in a window at one time. The display window is 13 rows by 32 columns. To move the cursor backward (a [CNTL] [H] also results in a backspace) and up and down in the window use the arrow keys. To move the cursor forward, press [Shift] [▶] on the HP 4952A keyboard. The window will move in the screen when you come to the end of a displayed row, this will be reflected in the window location in the below the softkeys. The cursor cannot be moved any further to the right when you have reached column 128. The location of the currently displayed portion of the entire screen is depicted in the lower left corner of the HP 4952A screen. When a line exceeds 128 columns it wraps around to the next line.

Control characters can be sent by simultaneously holding down the Control (CNTL) key and striking the desired character key. The terminal ignores most control characters and does not display them. Control characters that the terminal does respond to are as follows:

ASCII	Hex	Response	Keystroke
BELL	07	Beep	[CNTL] [G]
BS	08	Backspace	[CNTL] [H]
HT	09	Tab one space	[CNTL] [I]
LF	0A	Line feed	[CNTL] [J]
CR	0D	Carriage return	[CNTL] [M]
ENQ	05	Transmit ACK	[CNTL] [E]

When operating in the terminal mode, the HP 4952A functions as a "dumb" terminal, meaning that when a character is typed, it is immediately transmitted. The terminal is designed to receive one or more stop bits and to transmit two stop bits, making it compatible with all asynchronous devices.

Pressing EXIT in the terminal mode returns the HP 4952A to the Terminal Emulate menu where you can select **Setup Menu** to change any of the parameters.

Pressing **Execute** puts the HP 4952A back in the terminal mode of operation and the last terminal session appears on the display. This arrangement lets you switch to the Terminal Setup menu for a quick parameter change and then return to the terminal mode to continue the current terminal mode session.

www.valuetronics.com

Pressing EXIT in the Terminal Emulate menu returns the HP 4952A to the Top Level Menu. All normal HP 4952A menus remain as they were before the terminal session was entered.

VT-100 Terminal Emulation

Special escape codes are used to perform the VT-100 terminal operations. The HP 4952A can perform the following VT-100 terminal operations:

```
<ESC>[p1 A          move up by p1 lines (no scroll)
<ESC>[p1 B          move down by p1 lines (no scroll)
<ESC>[p1 C          move right by p1 spaces (no wrap)
<ESC>[p1 D          move left by p1 spaces (no wrap)
<ESC>[p1;p2 H       move to row p1 and column p2
<ESC>[p1 J          blank screen according to p1
                                p1 = 0 from cursor to end
                                p1 = 1 from cursor to start
                                p1 = 2 entire screen
<ESC>[p1 K          blank line according to p1
                                p1 = 0 from cursor to end
                                p1 = 1 from cursor to start
                                p1 = 2 entire line
<ESC>[p1;p2 f       same as <ESC>[p1;p2 H
<ESC>[p1;...;pn m   set graphic parameters according to:
                                p = 0  all attributes off
                                p = 1  bold
                                p = 4  underline
                                p = 5  blink
                                p = 7  inverse video
<ESC>7              save position, graphic parameters, and character set
<ESC>8              restore parameters saved by <ESC>7
<ESC>D              move down 1 line with scroll
<ESC>E              move to the left margin, down 1 line with scroll
<ESC>M              move up 1 line with scroll
<ESC>c              reset to saved/power-on state and self test
```

For example: `<ESC>[0;1;4;5;7 m` will turn on all the graphic parameters.

www.valuetronics.com

Lead Control

The leads (lines) which are controlled by the terminal emulator are summarized below.

Lead	Pin	Mode = DTE	Mode = DCE
TD	2	output = data	input = data
RD	3	input = data	output = data
RTS	4	output = on	input
CTS	5	input	output = On
DSR	6	input	output = On
CD	8	input	output = On
DTR	20	output = On	input

Once the leads are set, they are not dropped until the user exits from the Terminal Emulator menu, or the Mode is changed in the Terminal Setup Menu (DCE to DTE or DTE to DCE). The leads are set the first time the user either executes the terminal emulator mode or runs the Simulate menu from the Terminal Emulator Setup menu. The leads that are set depend on what the Mode is selected as in the Terminal Setup menu (either DCE or DTE).

While running the Simulate menu from the Terminal Emulator menu, the leads will be in the state listed abovee unless the Simulate menu executes a Set Lead command. Upon exiting from the run or by encountering a Stop Test command, the leads will be restored to the state listed.

The Simulate menu must be DTE if the Terminal Setup menu is selected as a DTE and the Simulate menu must be DCE if the Terminal Setup menu is selected as a DCE.

All parameters except the Mode parameter in the Terminal Setup menu can be changed without dropping the leads. This is handy for changing the parity or data code parameters, as well as echo and display functions.

www.valuetronics.com

Hardware Handshake

The hardware handshake is the electronic handshake that occurs at the physical level (Level 1) of the communications link before data is transferred across the link.

When using the application in DTE mode, the Data Terminal Ready (DTR) and the Request To Send (RTS) leads are set ON to ensure communications, however, the terminal emulator application will transmit despite the state of Data Set Ready (DSR), Clear To Send (CTS), and Carrier Detect (CD) from the other device. When using the application in DCE mode, the DSR, CTS, and CD leads are set ON but the terminal emulator application will transmit despite the state of DTR and RTS from the other device.

Software Handshake

The software handshake is different than the hardware handshake. It controls the flow of data between devices so that overflows do not occur. Although very few dumb terminals are designed to handle software handshaking, the terminal emulator application supports ENQ/ACK (for HP Computers).

ENQ/ACK Handshake

ENQ/ACK is initiated by the main office computer in the system. The computer is set up to send a specified number of characters (e.g., 80) followed by an ENQ character (usually 05H). When the terminal has processed all the received characters and is ready to receive more, it sends an ACK character (usually 06H). To handle this type of software handshake choose ENQ/ACK in the Terminal Setup menu.

Manual Flow Control

In the terminal mode of operation, if a main office computer downloads a file of data which is larger than can be displayed on the HP 4952A, you can manually control the data flow using the Xon and Xoff characters. To stop the flow of data, transmit an Xoff signal (usually press CNTL S). To resume the flow of data, transmit an Xon signal (usually press CNTL Q). This method of flow control can be used with either ENQ/ACK or NONE handshaking.

Note The Manual Flow Control is provided by the central CPU, and may not be provided by all CPU's.

---

www.valuetronics.com

www.valuetronics.com

15

Interface Pods

- Introduction
- Interface Pod Installation
- The HP 18179A Interface
- The HP 18180A Interface
- The HP 18260A Interface
- The HP 18174A Interface
- The HP 18177A/G Interface
- The HP 18160A Interface
- The HP 18270A Interface Module

www.valuetronics.com

Introduction

An interface pod is required to connect the HP 4952A to the data line. The interface pod also forms the cover of the instrument. Interface pods are available for the RS-232C/V.24, RS-449, and V.35 interfaces.

RS-232C/V.24 Interfaces

HP 18179A

This interface pod uses LEDs for showing all three conditions of the line: marks, spaces, and high impedance. Because it has a complete breakout box, this pod is useful for level 1 troubleshooting.

HP 18180A

This interface pod contains both a EIA RS-232C/CCITT V.24 interface and an RS-449/422A/423A interface.

The RS-232C is compatible with MIL-188C. Ten switches are provided for line isolation. LCD indicators indicate only line activity on: TD, RD, TC, RC, DTR, DSR, RTS, CTS, CD. A manually connected.MARK/SPACE monitor is available.

The RS-449 interface utilizes balanced RS-422A drivers. LCD indicators indicate only line activity on: SD, RD, ST, RT, RS, CS, TR, DM, RR.

HP 18260A

This interface pod contains both an RS-232C/V.24 interface and an X.21 interface. The RS-232C portion of the interface is the same as the HP 18180A. The X.21 portion lets you monitor and simulate all phases of the CCITT X.21 protocol.

www.valuetronics.com

RS-449 Interfaces

HP 18174A

This interface pod contains a RS-449/422A/423A interface.

The RS-449 interface utilizes balanced RS-422A drivers. LCD indicators indicate only line activity on: SD, RD, ST, RT, RS, CS, TR, DM, RR.

HP 18180A

This interface pod contains both a EIA RS-232C / CCITT V.24 interface and an RS-449/422A/423A interface.

The RS-449 interface utilizes balanced RS-422A drivers. LCD indicators indicate only line activity on: SD, RD, ST, RT, RS, CS, TR, DM, RR.

The RS-232C is compatible with MIL-188C. Ten switches are provided for line isolation. LCD indicators indicate only line activity on: TD, RD, TC, RC, DTR, DSR, RTS, CTS, CD. A manually connected MARK/SPACE monitor is available.

V.35 Interfaces

HP 18177A/G

This pod contains hardware for the V.35 interface. This interface pod uses LEDs for showing all three conditions of the line: marks, spaces, and high impedance. The lines monitored are: DTE, DCE, SCE, SCT, SCR, RS, DTR, CS, DSR, CD.

HP 18160A

This pod contains hardware for both the V.35 and RS-232C/V.24 interfaces. This interface pod uses LEDs for showing all three conditions of the line: marks, spaces, and high impedance.

www.valuetronics.com

Interface Pod Installation

To connect the Interface Pod to the HP 4952A Protocol Analyzer, set the power switch on the HP 4954A to OFF and attach the interface pod cable to the Interface Pod connector on the rear panel. Tighten the connector screws to ensure that the cable will not pull off during operation

Caution Turn OFF the Protocol Analyzer before connecting or disconnecting any Interface Pod.

The pod can be secured to the top of the analyzer's pouch by using the strap provided on the pouch.

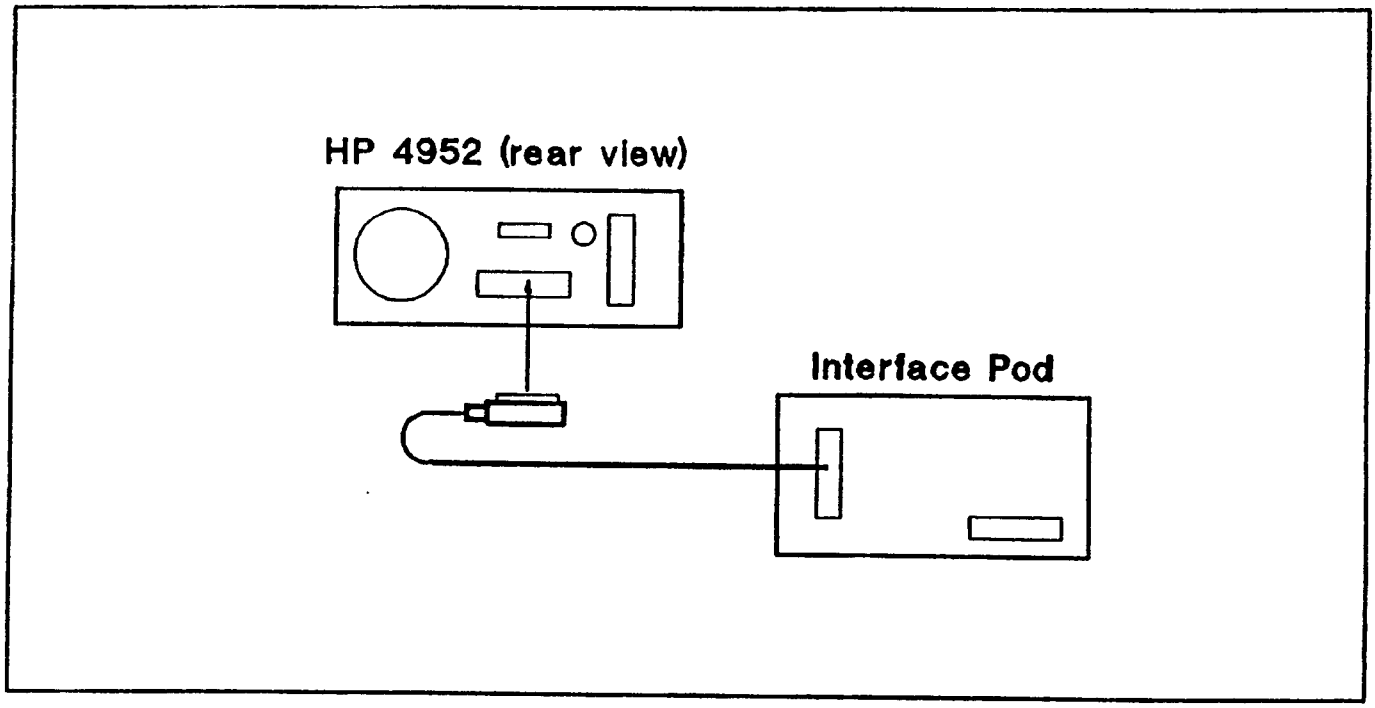

Figure 15-1. Interface Pod Connection

www.valuetronics.com

The HP 18179A Interface

RS-232C/V.24

The HP 18179A is an RS-232C/V.24 interface pod which connects the HP 4952A to the DTE or DCE. The HP 18179A is compatible with CCITT V.24 and EIA RS-232C electrical, mechanical, functional, and procedural specifications.

The HP 18179A can be used for complete level 1 troubleshooting on RS-232C/V.24 interfaces. It contains 10 pairs of real-time LEDs which monitor data, clocks, and major control line activity.

The LEDs show all three possible line states. The green LEDs indicate "on" states, or valid spaces. The red LEDs indicate "OFF" states, or valid marks. The high impedance state is indicated when both the red and the green LEDs on a line are not lit. The LEDs also indicate real-time activity; that is they show actual transitions.

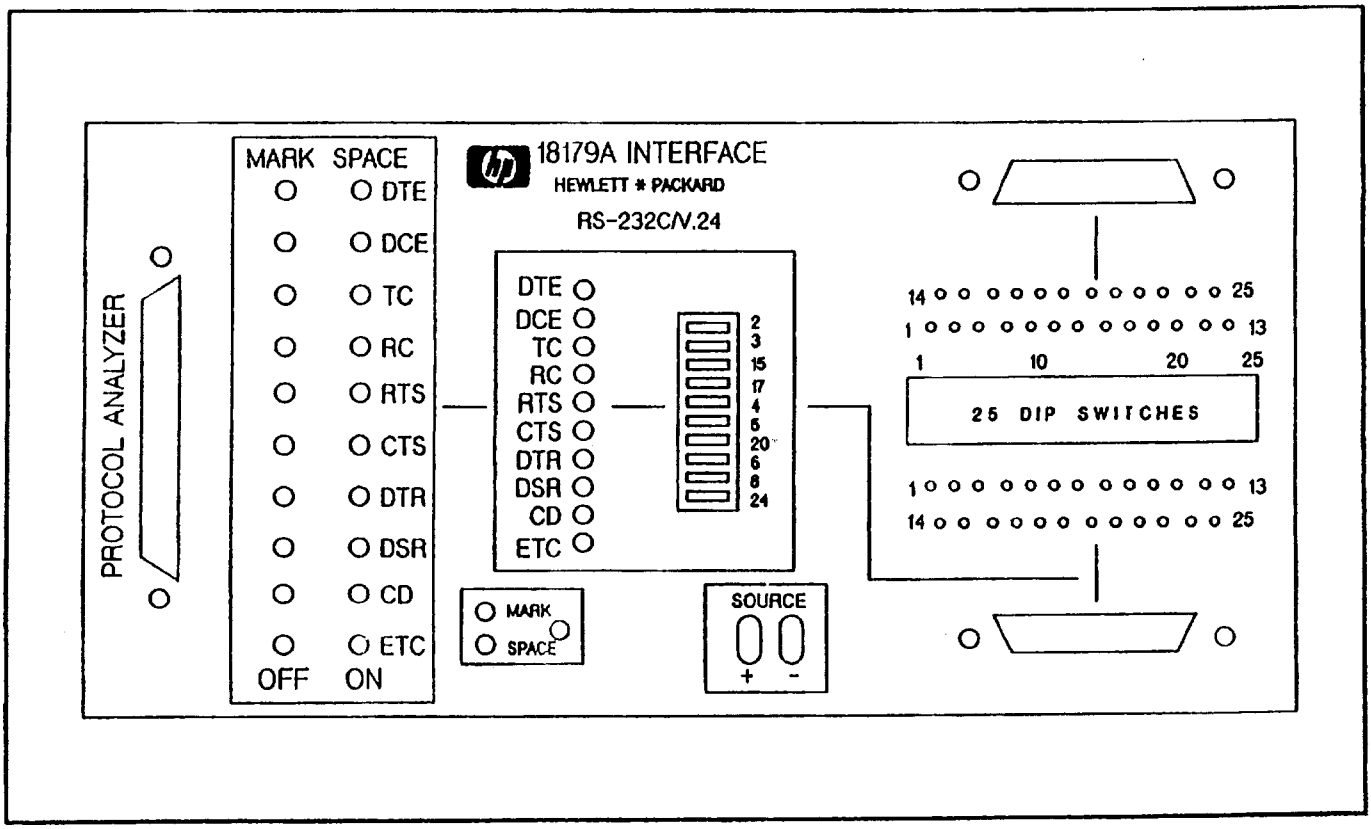

Figure 15-2. The HP 18179A Interface

www.valuetronics.com

The HP 18179A also contains a complete breakout with switches for interrupting each of the 25 conductors. Access to all 25 pins is provided by a complete set of 25 pins on each side of the switches, allowing you to connect any interface pin to any other.

In the DTE and DCE simulate modes RS-232C/V.24 drivers are switched into the appropriate lead by latching relays. If monitor mode is selected all RS-232C/V.24 drivers are disconnected from the line.

LEDs

The 3-state indicators indicate activity on the interface pins. The high impedance state is indicated when both LEDs are OFF.

Green: Space (logic '0', positive voltage) turns on at > 2.75 V, turns OFF at < 0.25 V

Red: Mark (logic '1', negative voltage) turns on at < -3.0 V, turns OFF at > -3.0 V

Disconnect Switches

Pins 2, 3, 4, 5, 6, 8, 15, 17, 20, and 24 may be individually disconnected from the data link by switches. This lets you isolate non-driven interface lines from the HP 4952A. Non-driven lines may develop cross talk noise which can be mistaken by the analyzer for transitions.

Connectors For RS-232C/V.24 Y-Cable

These connectors connect the Interface Pod to the line for monitoring or simulation. Connect the Y-cable to the top connector to include the breakout box in series with the line. Connect the Y-cable to the bottom connector to by-pass the breakout box.

Full Breakout Box

The Breakout Box provides cross-patching, line-forcing, and monitoring capabilities for all of the RS-232C/V.24 lines. The miniature switches isolate lines. Connect the Y-cable to the top connector to use the breakout box.

Jumper Pins

All 25 pins of the RS-232C/V.24 connector are brought out for jumpering on both sides of the breakout switches. If your network cable has different pin assignments from the interface standard, you can use the supplied jumper wires to connect the interface lines to the desired pin on your cable.

www.valuetronics.com

+/-12 V Source Pins

The Source Pins supply +12 volts and - 12 volts. You may set any signal line ON or OFF by jumpering that line to the Source Pins.

Mark/Space Indicator

The Mark/Space Indicator lets you check the level of any signal line. Jumper any pin to this indicator to find its state.

Instrument Cable Connector

This connector connects the Interface Pod to the HP 4952A via the Pod-Instrument cable supplied with the instrument.

Table 15-1. The RS-232/V.24 Interface (HP18179A, and 18180A)

Pin	Circuit	Function	EIA	CCITT	Source
1	GND	Protective Ground	AA	101 .	
2	TD	Transmitted Data	BA	103 DTE	
3	RD	Received Data	BB	104 DCE	
4	RTS	Request To Send	CA	105 DTE	
5	CTS	Clear To Send CD	106	DCE	
6	DSR	Data Set Ready	CC	107 DCE	
7	GND	Ground Signal	AB	102 ..	
8	CD	Carrier Detect	CF	109 DCE	
9-11		unassigned			
12	SCD	Sec Carrier Detect	SCF	122 DCE	
13	SCS	Sec Clear To Send	SCB	121 DCE	
14	STX	Sec Transmitted Data	SBA	118 DTE	
15	TC	Transmit Clock	DB	114 DCE	
16	SRD	Sec Received Data	SBB	119 DCE	
17	RC	Received Clock	DD	115 DCE	
18		unassigned			
19	SRS	Sec Request to Send	SCA	120 DTE	
20	DTR	Data Terminal Ready	CD	108.2 DTE	
21	SQ	Signal Quality	CG	110 DCE	
22	RI	Ring Indicator	CE	125 DCE	
23	DRS	Data Rate Selector	CH	111 DTE	
				C1 DCE	
24	ETC	Ext Transmit Clock	DA	113 DTE	
25 ...	unassigned				

www.valuetronics.com

The HP 18180A Interface

(Combination RS-232C/V.24 and RS-449 Interface)

The HP 18180A is an RS-232C/V.24 interface pod as well as RS-449/422A/423A. The HP 18180A has slightly less capability than the HP 18179A pod. Its LCD indicators show only "on" or space states. Also, unlike the HP 18179A, the HP 18180A does not contain a full breakout box.

Connectors

The top connector, labeled PROTOCOL ANALYZER, connects the interface pod to the HP 4952A via the Pod-Instrument cable supplied with the instrument. The bottom connector, labeled RS-232C/V.24 connects the Interface to the line for monitoring or simulation.

Jumper Pins

All 25 pins of the bottom connector are brought out for jumpering. If your network cable has different pin assignments from the interface standard, you can use the supplied jumper wires to connect the interface lines to the desired pin on your cable. Pins 2, 3, 4, 5, 6, 8, 15, 17, 20, and 24 are also brought out on the other side of the breakout switches for jumpering.

LCD Indicators

The LCD indicator for a signal line is dark when that line is On or Spacing. The LCD indicator is blank when a line is OFF, Marking, or in tri-state. For the indicator to be dark the voltage on that line must be greater than +2.75 volts. Once the indicator is dark, it will not go blank until the voltage becomes less than +0.25 volts. Therefore, the LCD for individual lines do not distinguish Marking and tri-state. Use the Mark/Space Monitor to do this.

LCD Indicator	Interface Line
Dark	Logical "0" (Space, On, positive voltage)
Blank	Logical "1" (Mark, Off, negative voltage, tri-state)

www.valuetronics.com

Source Pins

The six Source Pins supply +12 volts and -12 volts. You may set any signal line ON or OFF by jumpering that line to the Source Pins.

Disconnect (breakout) Switches

Pins 2, 3, 4, 5, 6, 8, 15, 17, 20, and 24 may be individually disconnected from the data link by means of switches. This lets you isolate non-driven interface lines from the HP 4952A.

Mark/Space Monitor

Use Mark/Space Monitor Pin to check the level of any signal line. Jumper this line to any signal pin and observe the ON/OFF LCD indicators. The ON indicator is darkened for levels greater than +3 volts; the OFF indicator is darkened for levels less than -3 volts. The other LCD indicators do not distinguish between Marking and tri-state conditions (they are blank below +0.25 volts). The Mark/Space Monitor lets you check these lines, or any other signal lines for Mark/Space levels.

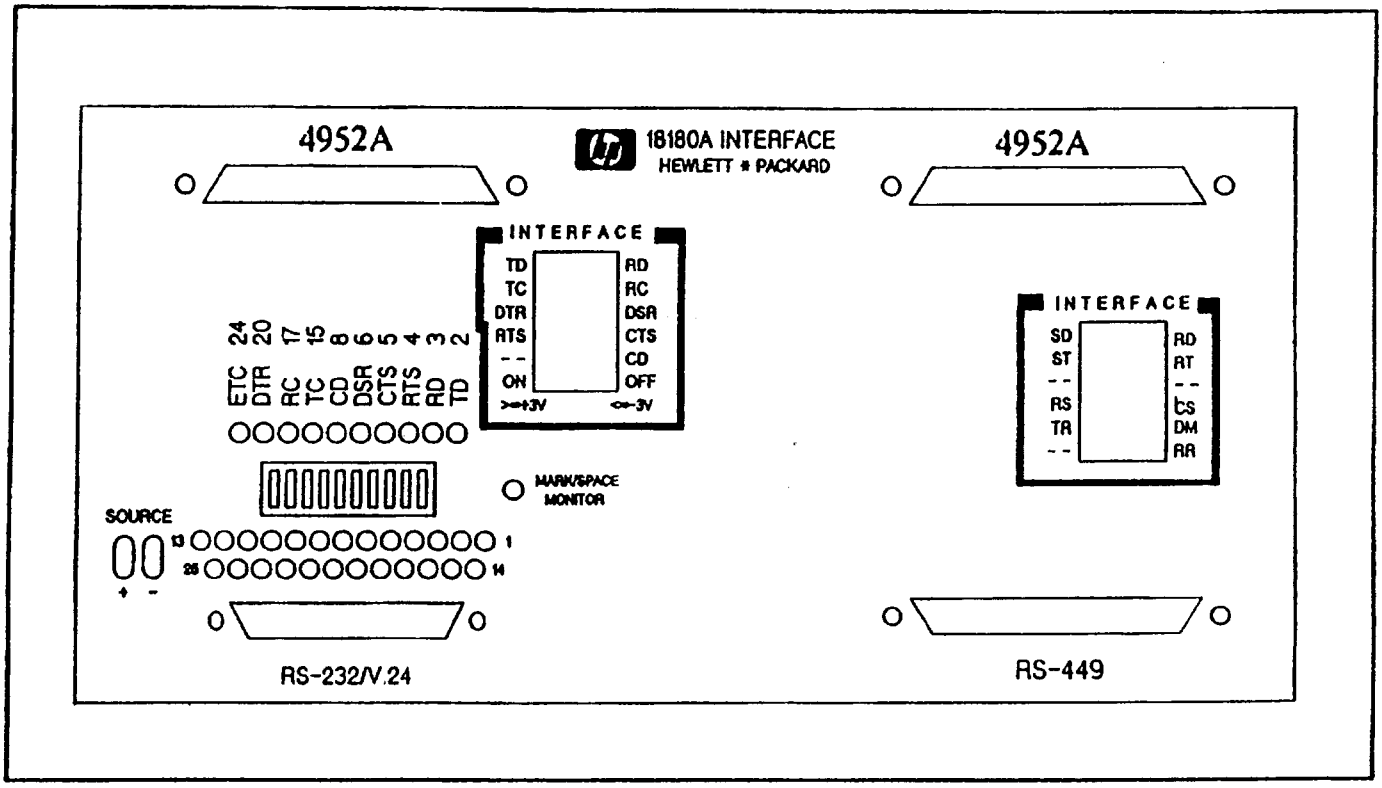

Figure 15-3. The HP 18180A Interface

www.valuetronics.com

The HP 18260A Interface

(Combination RS-232C/V.24 and X.21 Interface)

This interface pod contains both an RS-232C/V.24 interface and an X.21 interface.

RS-232C Portion

Connectors

The top connector, labeled PROTOCOL ANALYZER, connects the interface pod to the HP 4952A via the Pod-Instrument cable supplied with the instrument. The bottom connector, labeled RS-232C/V.24 connects the Interface to the line for monitoring or simulation.

Jumper Pins

All 25 pins of the bottom connector are brought out for jumpering. If your network cable has different pin assignments from the interface standard, you can use the supplied jumper wires to connect the interface lines to the desired pin on your cable. Pins 2, 3, 4, 5, 6, 8, 15, 17, 20, and 24 are also brought out on the other side of the breakout switches for jumpering.

Source Pins

The six Source Pins supply +12 volts and -12 volts. You may set any signal line ON or OFF by jumpering that line to the Source Pins.

Disconnect (breakout) Switches

Pins 2, 3, 4, 5, 6, 8, 15, 17, 20, and 24 may be individually disconnected from the data link by means of switches. This lets you isolate non-driven interface lines from the HP 4952A.

www.valuetronics.com

LCD Indicators

The LCD indicator for a signal line is dark when that line is On or Spacing. The LCD indicator is blank when a line is OFF, Marking, or in tri-state. For the indicator to be dark the voltage on that line must be greater than +2.75 volts. Once the indicator is dark, it will not go blank until the voltage becomes less than +0.25 volts. Therefore, the LCD for individual lines do not distinguish Marking and tri-state. Use the Mark/Space Monitor to do this.

LCD Indicator	Interface Line
Dark	Logical "0" (Space, On, positive voltage)
Blank	Logical "1" (Mark, Off, negative voltage, tri-state)

Mark/Space Monitor

Use the Mark/Space Monitor Pin to check the level of any signal line. Jumper this pin to any signal pin and observe the ON/OFF LCD indicators. The On indicator is darkened for levels greater than +3 volts; the Off indicator is darkened for levels less than -3 volts. The other LCD indicators do not distinguish between Marking and tri-state conditions (they are blank below +0.25 volts). The Mark/Space Monitor lets you check these lines, or any other signal lines for mark/space levels.

X.21 Portion

Connectors

The top connector labeled PROTOCOL ANALYZER connects the interface pod to the HP 4952A via the Pod-Instrument cable supplied with the instrument. The bottom connector labeled X.21 connects the X.21 Y-cable to the X.21 network.

LED Indicators

The LED indicators show the conditions of the R, T, C, I, and S circuits. A red LED is lit when a circuit is a logical 1 or Off. A green LED is lit when a circuit is a logical 0 or On.

www.valuetronics.com

The HP 18174A Interface (RS-449)

The HP 18174A follows the EIA RS-449/422A/423A standard. The RS-449 was intended by the Standards Committees as a replacement and enhancement for the RS-232C/V.24 interface and can be used for both low and high-speed applications. RS-449 is made up of two electrical standards, RS-423A and RS-422A.

The RS-422A uses a balanced signal lead configuration for data and clocks to enable high speed operation. RS-423A uses an unbalanced signal lead configuration. Because the HP 4952A implements RS-422A electrical standards for all category I circuits, it can also support RS-423A circuits.

The 18174A interface does not have an integral breakout box for disconnecting and jumpering lines. Selected pins are, however, monitored by LCD indicators. For the LCD indicators to transition, the unbalanced or differential A-B voltage must be greater than 0.2 volts.

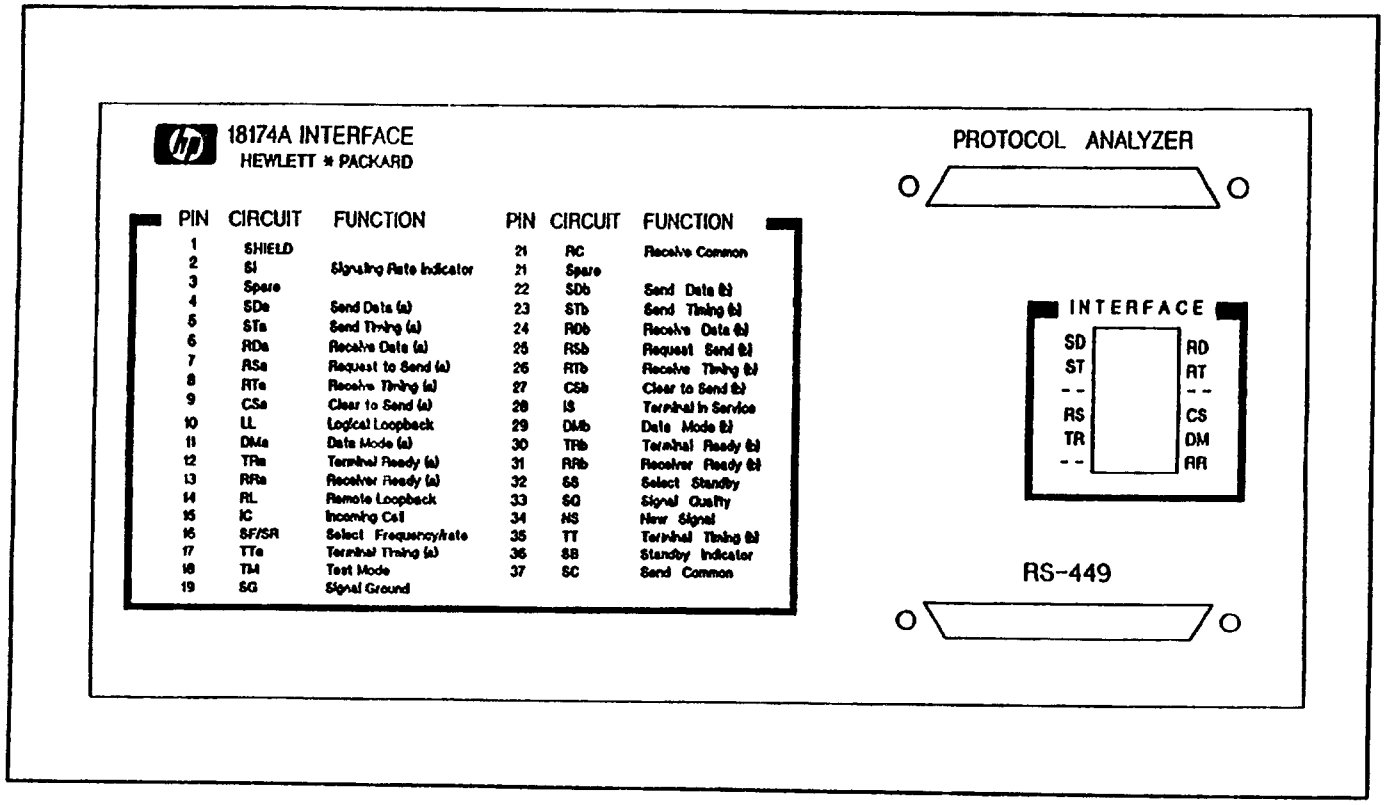

PIN	CIRCUIT	FUNCTION	PIN	CIRCUIT	FUNCTION
1	SHIELD		21	RC	Receive Common
2	SI	Signaling Rate Indicator	21	Spare	
3	Spare		22	SDb	Send Data (b)
4	SDa	Send Data (a)	23	STb	Send Timing (b)
5	STa	Send Timing (a)	24	RDb	Receive Data (b)
6	RDa	Receive Data (a)	25	RSb	Request Send (b)
7	RSa	Request to Send (a)	26	RTb	Receive Timing (b)
8	RTa	Receive Timing (a)	27	CSb	Clear to Send (b)
9	CSa	Clear to Send (a)	28	IS	Terminal In Service
10	LL	Logical Loopback	29	DMb	Data Mode (b)
11	DMa	Data Mode (a)	30	TRb	Terminal Ready (b)
12	TRa	Terminal Ready (a)	31	RRb	Receiver Ready (b)
13	RRa	Receiver Ready (a)	32	SS	Select Standby
14	RL	Remote Loopback	33	SQ	Signal Quality
15	IC	Incoming Call	34	NS	New Signal
16	SF/SR	Select Frequency/rate	35	TT	Terminal Timing (b)
17	TTa	Terminal Timing (a)	36	SB	Standby Indicator
18	TM	Test Mode	37	SC	Send Common
19	SG	Signal Ground			

Figure 15-4. The HP 18174A Interface

www.valuetronics.com

Table 15-2. The RS-449 Interface

Pin	Circuit	Function	Pin	Circuit	Function
1	SHIELD		20	RC	Receive Common
2	SI	Signal Rate Indic.	21	Spare	
3	Spare		22	SD	b Send Data (b)
4	SDa	Send Data (a)	23	STb	Send Timing (b)
5	STa	Send Timing (a)	24	RDb	Receive Data (b)
6	RDa	Receive Data (a)	25	RSb	Request Send (b)
7	RSa	Request to Send (a)	26	RTb	Receive Timing
8	RTa	Receive Timing (a)	27	CSb	Clear to Send
9	CSa	Clear to Send (a)	28	IS	Terminal in
10	LL	Local Loopback			Service
11	DMa	Data Mode (a)	29	DMb	Data Mode (b)
12	TRa	Terminal Ready (a)	30	TRb	Terminal Ready (b)
13	RRa	Receiver Ready (a)	31	RRb	Receiver Ready (b)
14	RL	Remote Loopback	32	SS	Select Standby
15	IC	Incoming Call	33	SQ	Signal Quality
16	SF/SR	Select Frequency/rate	34	NS	New Signal
17	TTa	Terminal Timing (a)	35	TT	Terminal Timing
18	TM	Test Mode	36	SB	Standby Indicator
19	SG	Signal Ground	37	SC	Send Common

www.valuetronics.com

The HP 18177A/G Interface (V.35 Interface)

This pod is a V.35 interface. The HP 18177A/G follows V.28/V.35 electrical specifications, V.24 functional specifications, and ISO 2593 mechanical specifications.

The mark/space LEDS can indicate a Mark or a Space. If both are Off at the same time the indication is that no signal is present on the line. The HP 18177A/G specifies a differential voltage resolution on Mark/Space detect of .55 volts +-30% for Data and Clock lines.

The V.28 control lines are specified as follows:

```
OFF LED on indicates <-2.8 volts on that line.
ON LED on indicates > .25 volts on the line.
Neither LED on indicates -2,8 < volts < .25 on the line.
```

The outputs of the control lines RS, DTR, CS, DSR, RLSD conform to the CCITT V.28 electrical standard meaning -12 volts for a mark (1, OFF) and +12 volts for a space (0, on).

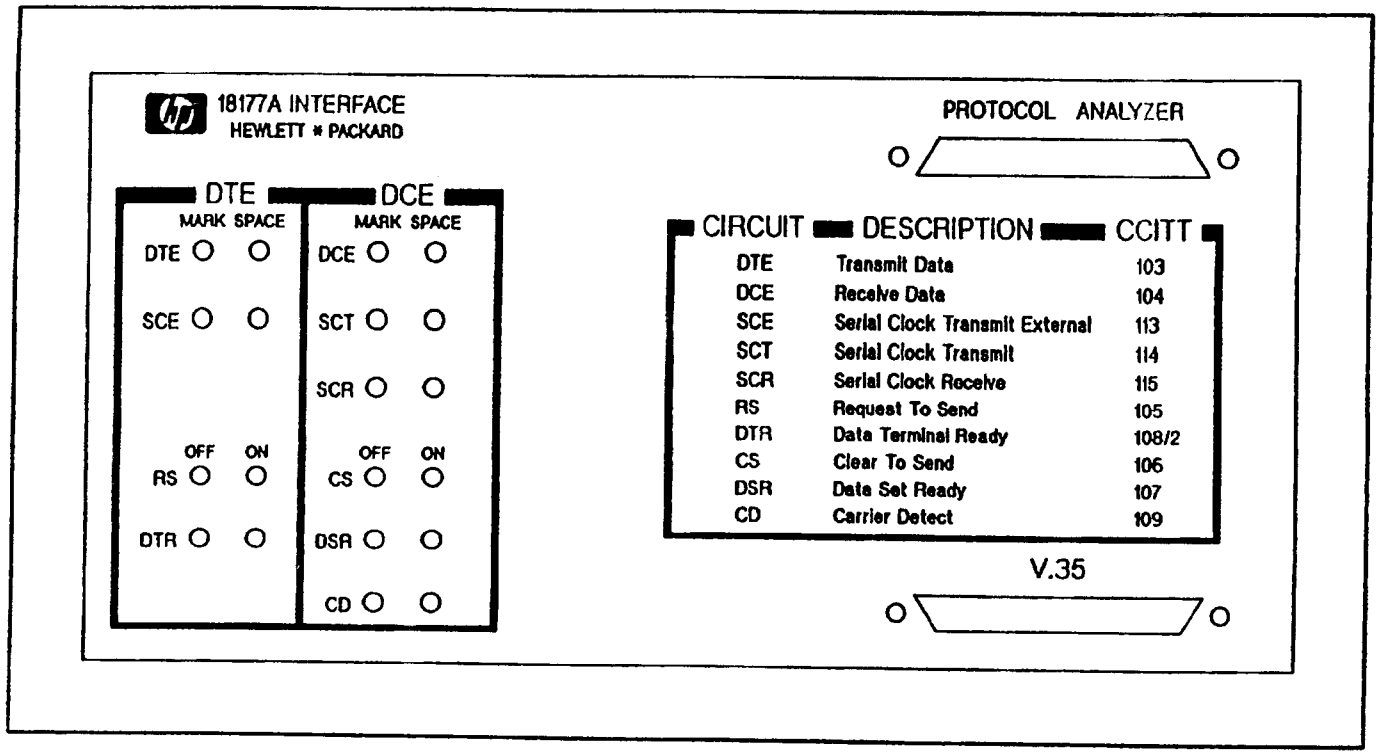

Figure 15-5. The HP 18177A Interface.

www.valuetronics.com

The HP 18160A (V.35 and RS 232C Interface)

The HP 18160A is a combination RS 232C and V.35 interface pod. The HP 18160A lets you monitor and send data to V.35 and RS-232C/V.24 equipment.

The interface contains 10 pairs of real-time LEDs which monitor data, clocks, and major control line activity.

The LEDs show three possible line states. The green LEDs indicate "on" states, or spaces. The red LEDs indicate "off" states, or marks. The undefined state is indicated when both the red and green LEDs on a line are not lit. The LEDs also indicate real-time activity; that is, they show actual transitions.

Either the RS-232C/V.24 or V.35 portion of the interface must be selected with the select switch located on the right-side of the pod front panel.

Note Only connect one type of network (either RS-232C or V.35) at a time, because the lines on the unused (unselected) interface connector(s) are still driven in Simulate mode.

Monitor, DCE Simulate, and DTE Simulate Modes

The pod can be configured to one of three desired modes of operation: either monitor, DCE simulation, or DTE simulation mode. You can select these three modes from the HP 4952A Monitor and Simulate menus.

LEDs

The 3-state indicators indicate activity on the interface pins. The undefined state is indicated when both LEDs are off.

During V.35 operation, these LEDs indicate the following condition on the V.35 data and clock lines:

```
Red  (mark) is ON when a logic 1 is present at the V.35 interface.
Green  (space)is ON when a logic 0 is present at the V.35 interface.
```


www.valuetronics.com

During RS-232C/V.24 operation, these LEDs indicate the following condition on the RS-232C/V.24 data and clock lines:

```
Red   (mark) is ON when a logic 1 is present at the RS-232C/V.24 interface.
Green (space) is ON when a logic 0 is present at the RS-232C/V.24 interface.
```

Jumper Pins

All 25 pins of the RS-232C/V.24 connector are brought out for jumpering to 10 pins (above 25 jumper pins). The HP 4952A Protocol Analyzer displays 4 control leads along with the data leads in Data and State display format. These are RTS, CTS, DSR, and CD.

The HP 18160A Interface Pod has LED displays for 10 of the interface leads. In order to display different leads other than the 4 in the Data and State display, or the 10 LEDs, or to reassign pins in a non-standard interface, use the supplied jumper wires to connect interface lines from your network to the desired pin that will be displayed on the protocol analyzer. When jumpering pins to new pin assignments, remember to open the corresponding disconnect switch.

Source Pins

The six Source Pins supply +12 volts and -12 volts. You may set any line on or off by jumpering that line to the Source Pins.

Disconnect (breakout) Switches

Pins 2, 3, 4, 5, 6, 8, 15, 17, 20, and 24 may be individually disconnected from the data link by means of switches. This lets you isolate non-driven interface lines from the protocol analyzer.

Mark/Space Indicator

The Mark/Space Indicator lets you check the level of any signal line. Jumper any pin to this indicator to find its state.

www.valuetronics.com

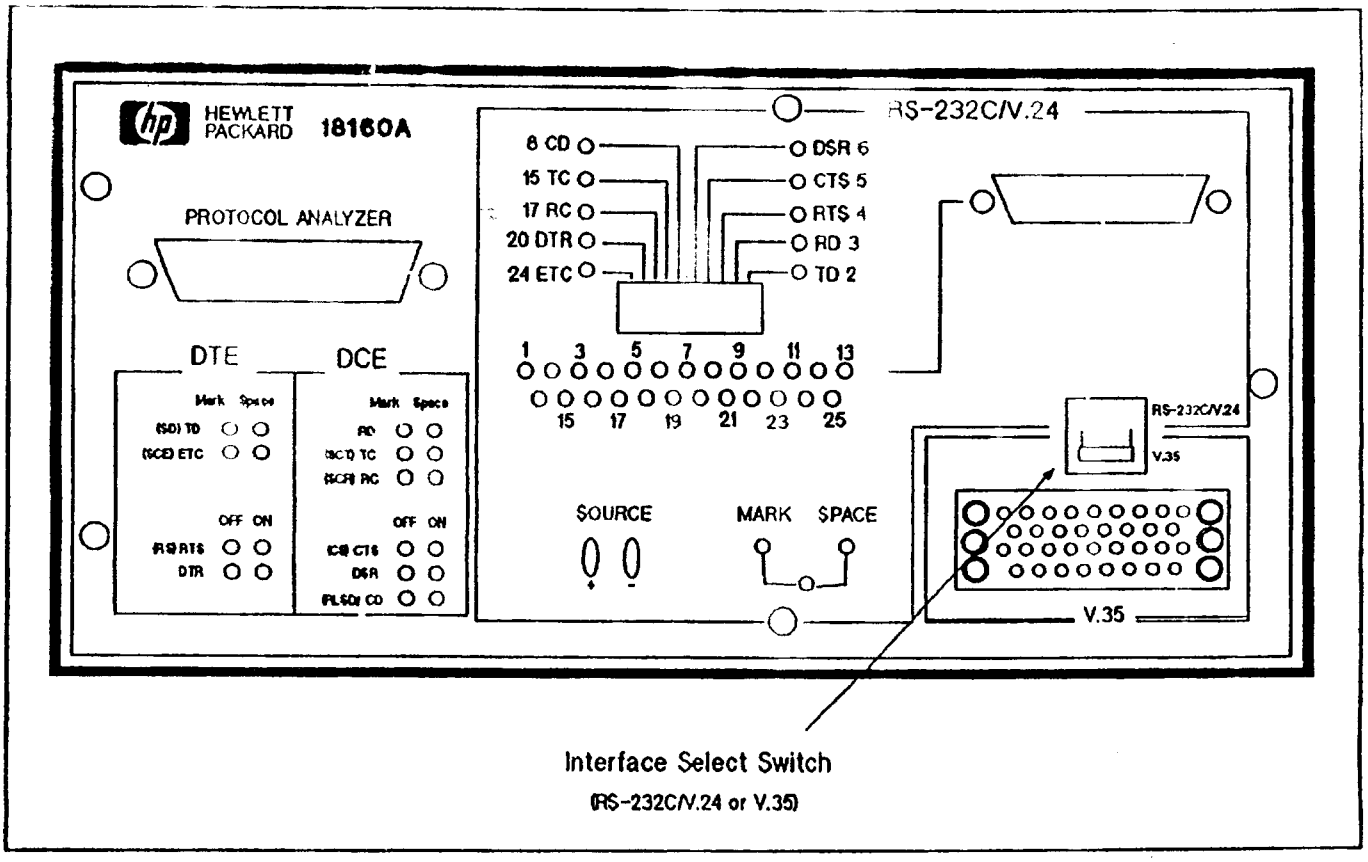

Figure 15-6. The HP 18160A Interface

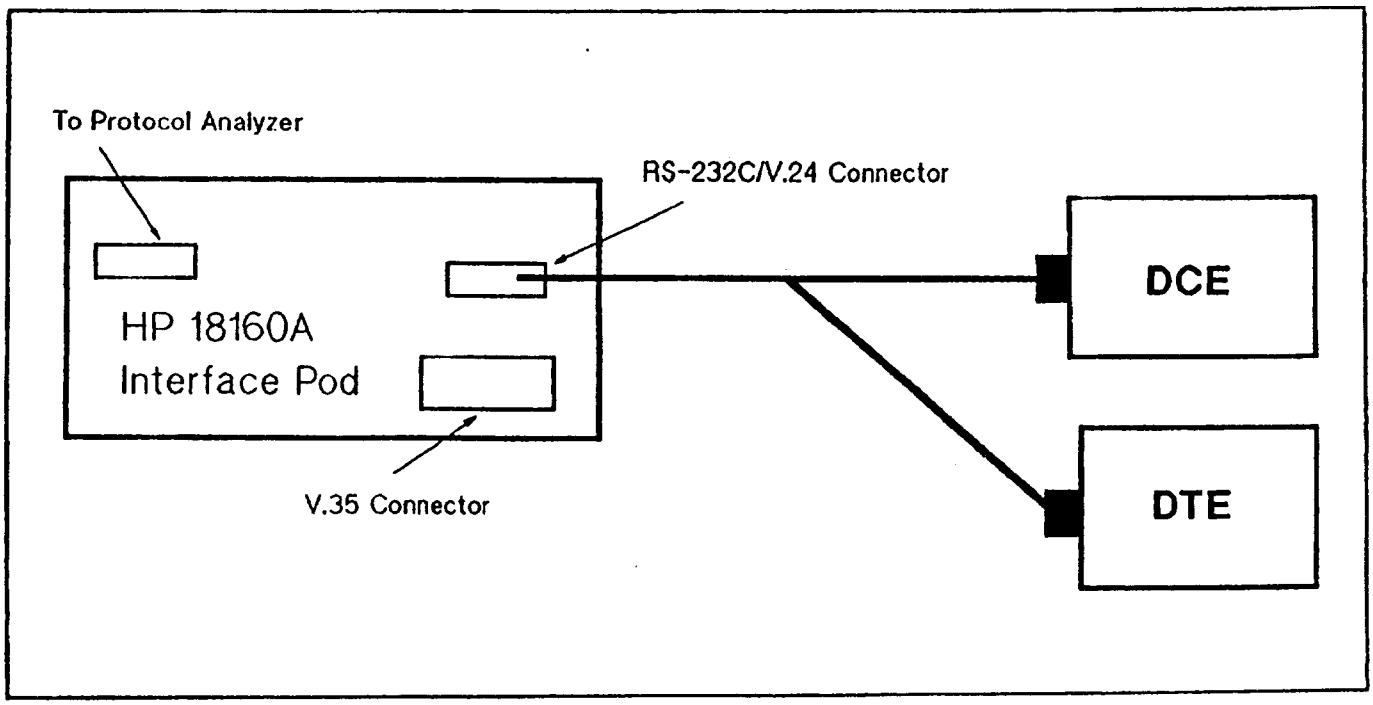

Figure 15-7. RS-232C/V.24 Pod Configuration - Monitor Mode

www.valuetronics.com

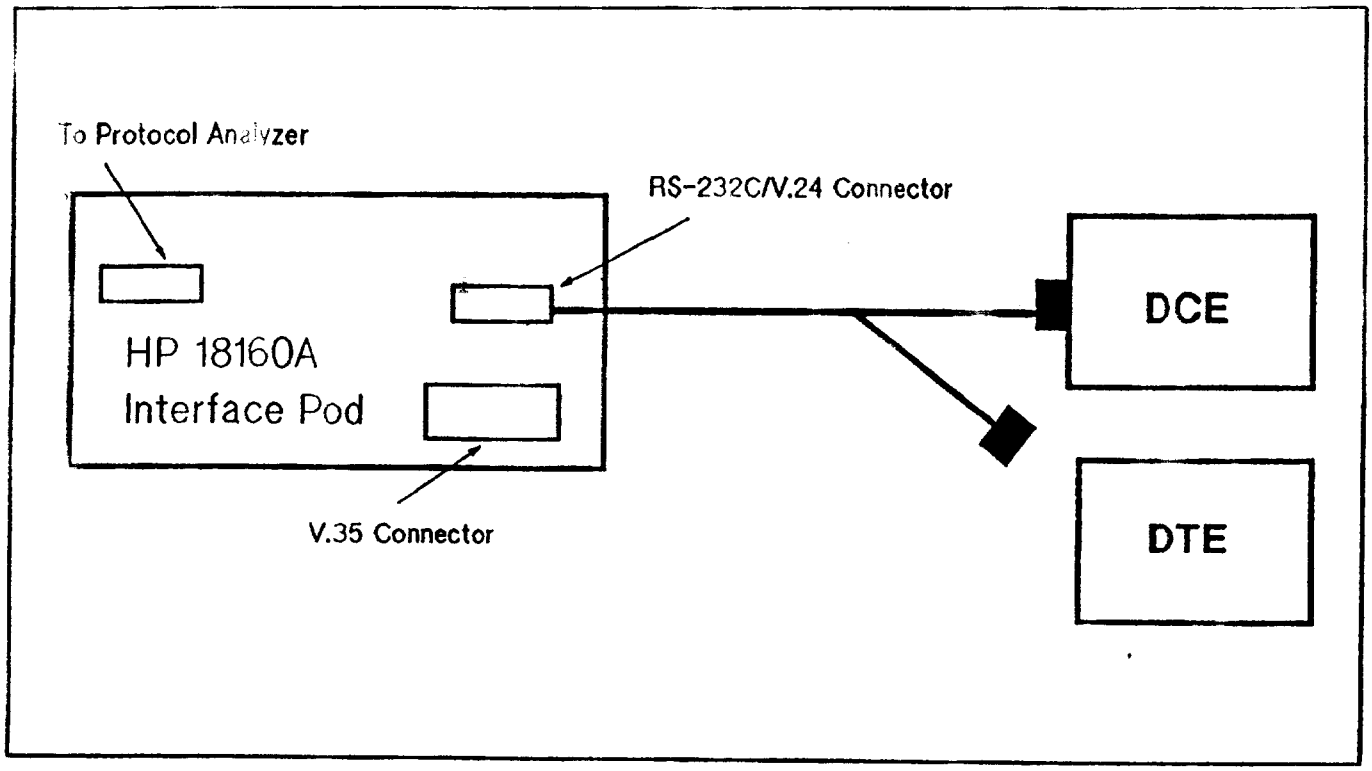

Figure 15-8 RS-232C/V.24 Pod Configuration - Simulating a DTE

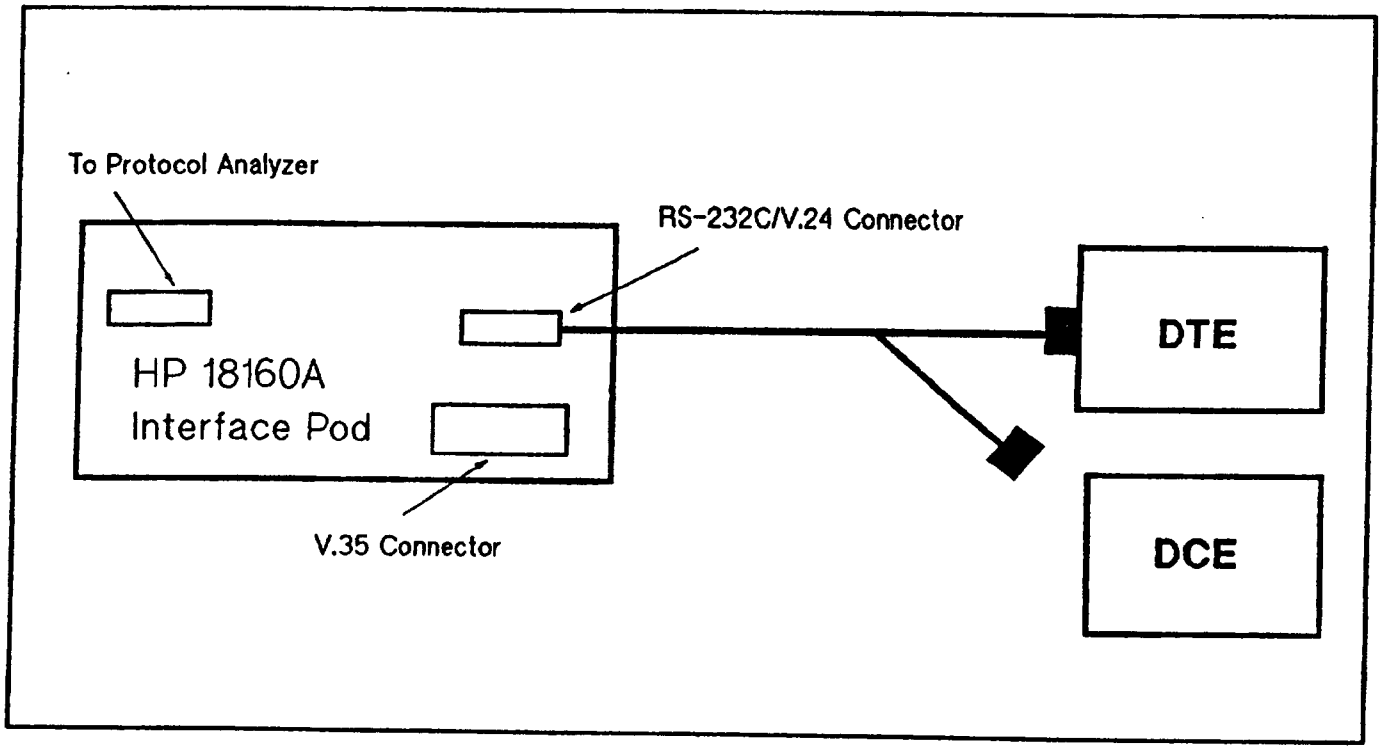

Figure 15-9 RS-232C/V.24 Pod Configuration - Simulating a DCE

www.valuetronics.com

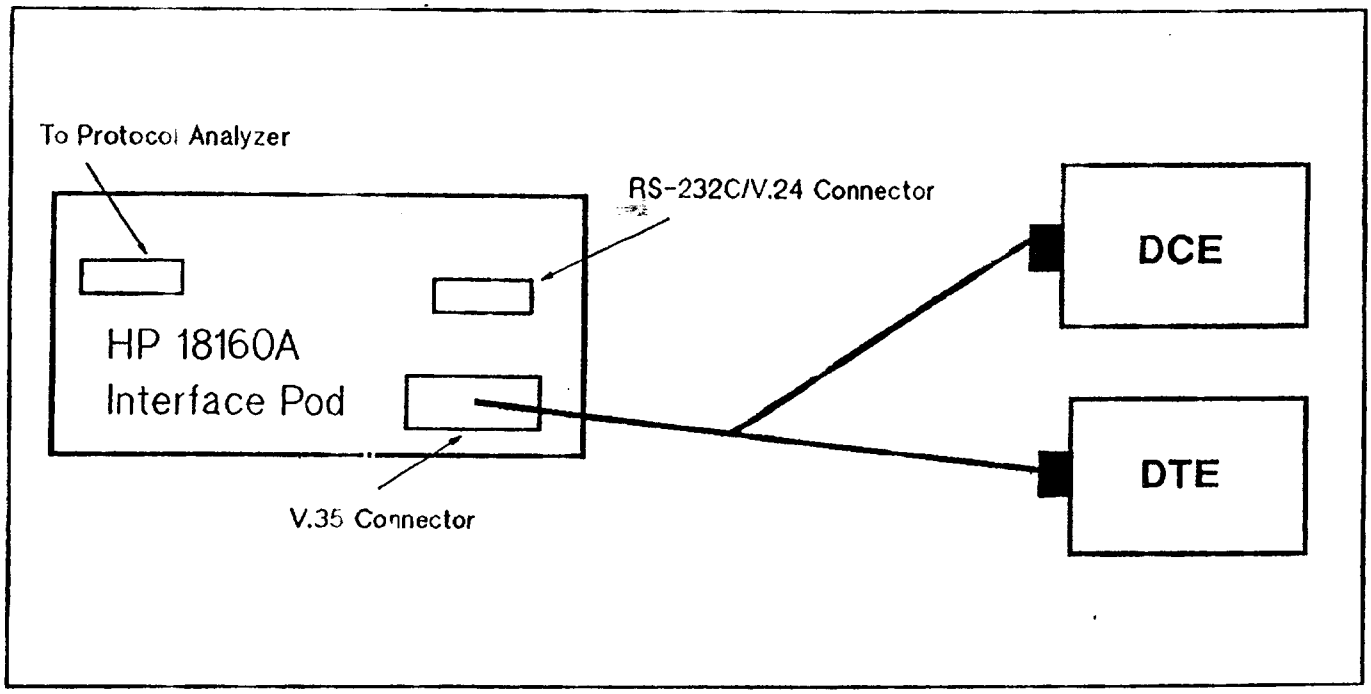

Figure 15-10. V.35 Pod Configuration - Monitor Mode

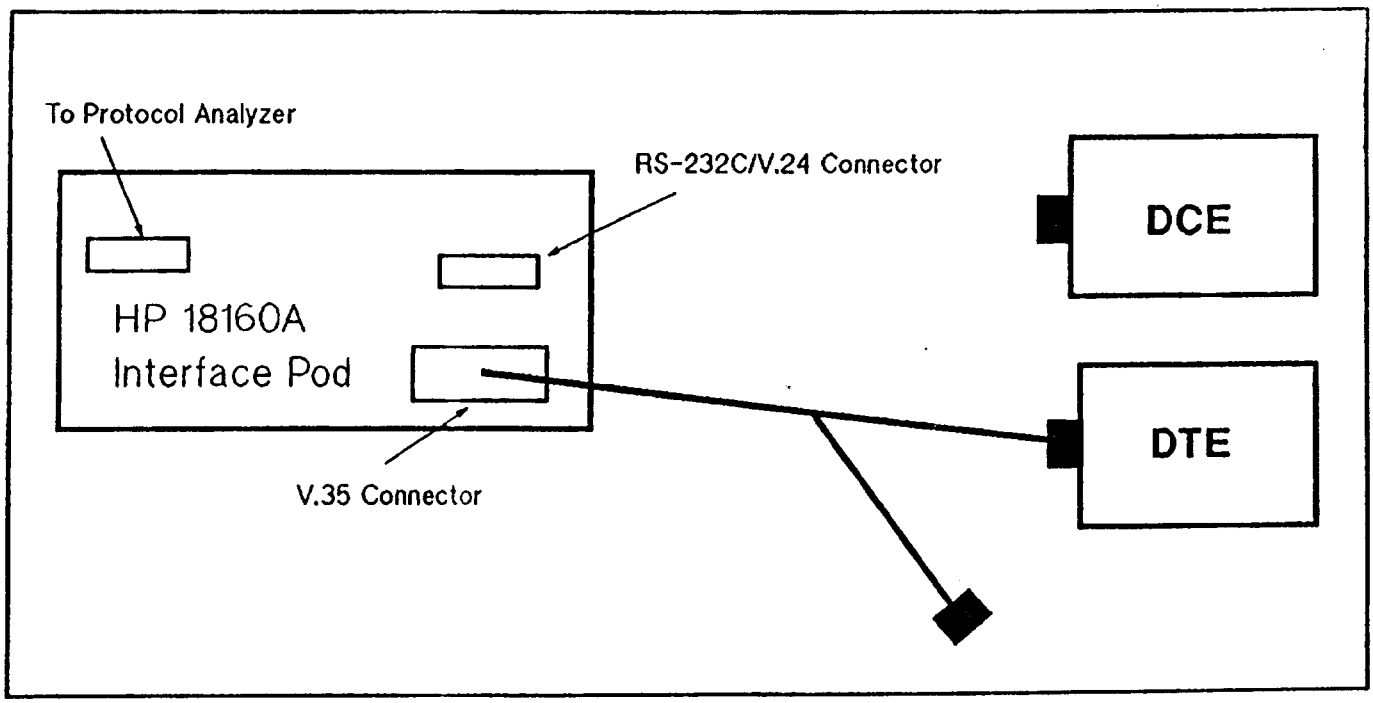

Figure 15-11 V.35 Pod Configuration - Simulating a DCE

www.valuetronics.com

The HP 18270A ISDN Interface and Analysis

The HP 18270A ISDN Interface Module, in conjunction with the HP 18268A software, makes ISDN troubleshooting easier.

The ISDN product can be used where ISDN data travels over a LAPD link using the Basic Rate S/T physical interface. In addition, the HP 18268A ISDN software can be used with any of the HP interface pods covered in this chapter and provide Q.921/Q.931 analysis in cases where the D channel has already been broken out from the S/T interface.

The major enhancements to the standard HP 4952A Protocol Analyzer made by the ISDN products are included below.

HP 18270A ISDN Interface Module Hardware Only

- Basic Rate S/T Interface Access
- INFO State LEDs
- TEI and SAPI filtering
- Handset support

HP 18268A ISDN Software Only

- Q.921 (LAPD) softkey assisted entry
- Q.921/Q.931 monitor/decode and simulate
- X.25 monitor/decode and simulate on D channel
- User definable display formats
- Expand decode of Information elements

www.valuetronics.com

16

Examples

www.valuetronics.com

Example 1: Measuring a Single RTS-CTS Delay

This test measures the time from when RTS goes on until CTS goes on. Use the **Monitor** menu for this example.

To view the timers and counters, press **Summary** during run-time, or **Timer & Cntr** in the Examine Data Menu after run-time.

Note that timer measurements must be referenced to a preceding trigger for accurate measurements.

Program	Description
Block 1:	
When Lead RTS goes On then goto Block 2	Timer 1 indicates RTS-CTS delay.
Block 2:	
Start Timer 1	
When Lead CTS goes On then goto Block 3	Note that Start and Stop statements must be preceded by When statements for accurate timing.
Block 3:	
Stop Tests	

www.valuetronics.com

Example 2: Monitoring a DCE

In this example, you monitor a DCE by simulating the DTE through the **Simulate** menu. When simulating a DTE, the HP 4952A supplies the ETC clock. Upon receiving the proper clocks and lead commands, the DCE begins sending data, which the HP 4952A automatically stores and displays while in the simulate mode.

```
Simulate DTE

Block 1:
Set Lead DTR  On
   and then
Set Lead RTS  On
```


www.valuetronics.com

Example 3: Monitoring a DTE

In this example, you monitor a DTE by simulating a DCE. When simulating a DCE, the HP 4952A automatically supplies both the TC and RC clocks. Upon receiving the proper clocks and lead commands, the DTE begins sending data, which the HP 4952A automatically stores and displays while in the simulate mode.

```
Simulate DCE

Block 1:
Set Lead DSR  On
   and then
Set Lead CD  On
   and then
Set Lead CTS On
```


www.valuetronics.com

Example 4: FOX Message

This test checks the ability of asynchronous terminals and printers to receive and display data. The "FOX" message is transmitted to the terminal using the **Simulate** menu and then the echo from the terminal is checked for parity errors.

```
Simulate DCE

Block 1:
Send THE QUICK BROWN FOX
JUMPS OVER A LAZY DOG 012
3456789.

Block 2:
When Error Parity on DTE
   then goto Block 3
When DCE
   then goto Block 1

Block 3:
Increment Counter 1
   and then
Goto Block 2
```


www.valuetronics.com

Example 5: Counting Parity Errors

This program uses the **Monitor** menu to count the number of parity errors on both the DTE and DCE lines and keep track of the number of minutes of the test.

Program	Description
Block 1:	
When DTE X	
or	
When DCE X	
then goto Block 2	
Block 2:	
Start Timer 5	Timer 5 starts when any character is sent on the DTE or DCE line. ("X" = don't care.)
Block 3:	
When Error Parity on DTE	
then goto Block 4	
When Error Parity on DCE	
then goto Block 5	
When Timer 5 is > 59999	Timer 5 counts milliseconds up to one minute.
then goto Block 6	
Block 4:	
Increment Counter 1	Counter 1 indicates DTE errors.
and then	
Goto Block 3	
Block 5:	Counter 2 indicates DCE errors.
Increment Counter 2	
and then	
Goto Block 3	

www.valuetronics.com

Block 6:

Increment Counter 5
  and then
Reset Timer 5
  and then
Goto Block 2

Counter 5 keeps track of the number of minutes into the test.

www.valuetronics.com

Example 6: Measuring More than One RTS-CTS Delay

This test measures RTS-CTS delays until stopped. Use the **Monitor** Menu for this example.

Timer 1 and Timer 2 measure alternate delays. If only one timer were used, you would not have had enough time to see the timer before it was reset.

To view the timers and counters press **Summary** in the Run Menu during run-time. After run-time press **Timer & Counter** in the Examine Data Menu.

Program	Description
Block 1:	
When Lead RTS goes On then goto Block 2	
Block 2:	
Reset Timer 1 and then Start Timer 1	Timer 1 measures the first RTS-CTS delay.
When Lead CTS goes On then goto Block 3	The two 'When' statements are ORed together.
When Lead RTS goes Off then goto Block 6	You can now view timer 1 while the analyzer finds the next delay.
Block 3:	
Stop Timer 1	
When Lead RTS goes On then goto Block 4	
Block 4:	
Reset Timer 2 and then Start Timer 2	Blocks 3-5 duplicate blocks 1-2. Timer 2 now measures the next RTS-CTS delay. Thus, the user has time to view timer 1 before it is reset.

www.valuetronics.com

When Lead CTS goes On
then goto Block 5

When Lead RTS goes Off
then goto Block 6

Block 5:
Stop Timer 2
and then
Goto Block 1

Block 6:
Reset Timer 1
and then
Reset Timer 2
and then
Beep
and then
Goto Block 1

The two "When" statements are ORed.

Control is looped back to Block 1.

If RTS goes off before CTS goes on the timers are reset and an alarm "beep" occurs.

www.valuetronics.com

Example 7: Simulating RTS-CTS Delay

In this test, you substitute the HP 4952A for the DTE. Thus, you can test the modem in isolation.

Timer 1 measures the time it takes for the modem to respond with CTS on.

Program	Description
Simulate DTE	
Block 1:	
Set Lead RTS On	
When Lead RTS goes On	
then goto Block 2	
Block 2:	
Reset Timer 1	Timer 1 is reset because the program later loops back to this block.
and then	
Start Timer 1	
and then	Timer 1 shows CTS response time.
Start Timer 5	
When Lead CTS goes On	Timer 5 causes the instrument to beep if CTS does not go on within 2 seconds
then goto Block 3	
When Timer 5 > 2000	
then goto Block 4	
Block 3:	
Reset Timer 5	
and then	
Stop Timer 1	
and then	
Set Lead RTS Off	RTS is now turned off and the test begun again after 30 seconds. (You can change this delay.)
and then	
Wait 29999	
and then	
Goto Block 1	

www.valuetronics.com

Block 4:

Reset Timer 5
and then
Reset Timer 1
and then
Beep
and then
Set Lead RTS Off
and then
Wait 250
and then
Goto Block 1

Block 4 is the error block. If CTS does not go on two seconds after RTS goes on, the analyzer beeps and restarts the test.

www.valuetronics.com

Example 8: Loopback

In this test, the local modem is looped back. The HP 4952A is substituted for the DTE and sends the "Quick Brown Fox" message 100 times. The modem is checked for proper handshaking and echo response.

Program	Description
Simulate DTE	
Block 1:	
Set Lead RTS On and then	
Start Timer 5	
When Lead CTS goes On then goto Block 2	The modem is checked for correct handshaking response.
When Timer 5 is > 2000 then goto Block 8	Timer 5 indicates whether the modem responds within 2 seconds.
Block 2:	
Reset Timer 5 and then	Timer 5 is reset for the next loop.
Send THE QUICK BROWN FOX JUMPS OVER A LAZY DOG 0123456789. and then	The message is sent to the modem.
Set lead RTS Off	
Block 3:	
When DCE THE QUICK BROWN FOX JUMPS OVER A LAZY DOG 0123456789 then goto Block 5	The modem is checked to see whether it echoes back each character.
When Lead CTS goes Off then goto Block 4	Because the two 'when' statements are ORed, every character must be received before CTS goes off.

www.valuetronics.com

Block 4:
Increment Counter 2

Counter 2 indicates the number of times this does not happen.

Block 5:
Increment Counter 1
If Counter 1 is > 99
then goto Block 7

Counter 1 shows the number of transactions up to 100.

Block 6:
Goto Block 1

The test starts over.

Block 7:
Stop Tests

Block 8:
Reset Timer 5
and then
Beep
and then
Goto Block 1

An alarm 'beep' indicates a lack of modem response.

www.valuetronics.com

Example 9: END-TO-END: Transmit First (HP 4925B Compatible)

The End-to-End test consists of the two programs described in Examples 9 and 10.

In the End-to-End Test, two HP 4952's (or an HP 4952A and an HP 4925B) are substituted for the DTEs at both ends of a line. Handshaking and messages are performed and checked 100 times. Except for the fact that one DTE transmits first, and the other DTE receives first, both programs are identical. There are two sections to this program: In blocks 5-6 this DTE is transmitting; in blocks 1-4 this DTE is receiving. Counter 1 indicates how many times the test failed. Counter 2 indicates the total number of transactions.

Note The 'receive first' unit must be started first.

The proper setup is necessary for this test. Use the Char Async/Sync Menu with all the default selections (Chapter 12) except the following:

Data Code Hex 8 Drop sync 4 chrs after 1_8 1_8 1_8 1_8 1_8 1_8 1_8

Sync on F_F 9_3

Program	Description
Simulate DTE	
Block 1:	
Goto Block 6	The program immediately jumps to the transmit section.
Block 2:	
Set Lead DTR On	
If Lead CD is On then goto Block 3	The If and When statements are ORed.
When Lead CD goes On then goto Block 3	

www.valuetronics.com

Block 3:
When Lead CD goes Off
  then goto Block 4
When DCE 7_6 B_3 F_A 4_1
  then goto Block 5

The two When statements are ORed: If CD goes off before the message is received, then the error counter is incremented. The DCE characters are the same as those sent by the HP 4925B

Block 4:
Beep
  and then
Increment Counter 1

Block 5:
Increment Counter 2

Counter 2 tells total transactions.

Block 6:
Wait 100 msec
  and then
Set Lead RTS On
If Lead CTS is On
  then goto Block 7
When Lead CTS goes On
  then goto Block 7

The transmit section of the program begins.

Block 7:
Send F_F 9_3 7_6 B_3 F_A 4_1 1_8
When DTE 18
  then goto Block 8

This is the same message sent by a HP 4925B

Block 8:
Set Lead RTS Off
If Counter 2 > 99
then goto Block 10

When Counter 2 reaches 100, the test is ended.

Block 9:
Goto Block 2

Block 10:
Stop Tests

www.valuetronics.com

Example 10: END-TO-END: Receive First (HP 4925B Compatible)

This is the part of the END-TO-END TEST for the DTE which receives first. There are two sections to the program: In blocks 1-4 the DTE is transmitting; in blocks 5-6 the DTE is receiving. Counter 2 tells how many times the test failed. Counter 1 keeps track of the total number of transactions.

Note The 'receive first' unit must be started first.

Use the Char Async/Sync Menu for the setup. Use all the default selections except the following:

Data Code Hex 8 Drop sync 4 chrs after 1_8 1_8 1_8 1_8 1_8 1_8 1_8

Sync on F_F 9_3

Program	Description
Simulate DTE	
Block 1:	
Set Lead DTR On	This is the Receive portion of the End-to-End test.
If Lead CD is On	
then goto Block 2	
When Lead CD goes On	
then goto Block 2	
Block 2:	
When Lead CD goes Off	These two When statements are Ored. If CD goes off before
then goto Block 3	this DTE has received the message, Counter 1 will
When DCE 7_6 B_3 F_A 4_1	indicate another failure.
then goto Block 4	
Block 3:	
Beep	
and then	
Increment Counter 1	

www.valuetronics.com

Block 4:
Increment Counter 2 — Counter 2 indicates another transaction.

Block 5:
Wait 100 msec — The transmit section of the program begins.
and then
Set Lead RTS On
If Lead CTS is On
then goto Block 6
When Lead CTS goes On
then goto Block 6

Block 6:
Send F_F 9_3 7_6 B_3 F_A 4_1 1_8
When DTE 1_8
then goto Block 7

Block 7:
Set Lead RTS Off
If Counter 2 > 99 — When the total transactions = 100 the test is ended.
then goto Block 9

Block 8:
Goto Block 1

Block 9:
Stop Tests

www.valuetronics.com

www.valuetronics.com

A

Error Messages

www.valuetronics.com

Application Denied

Cause	This occurs when an attempt is made to load or rename an illegal application. This might be an application copied on another device other than another HP 4952A.
Action	Check the application and ensure that it is correct.

Application Not Compatible

Cause	This occurs when an attempt is made to store an application that is not compatible.
Action	Check the application and ensure that it is not copy protected.

Bad Data - Cannot Sync

Cause	Indicates that incoming data does not match selected pattern.
Action	Check for line errors, wrong speed selected, or wrong pattern selected.

Bad Disc

Cause	The disc will not format due to having too many bad tracks.
Action	A disc having one or more bad tracks is considered not usable.

www.valuetronics.com

Buffer Empty

Cause	The slave buffer is empty.
Action	Check the content of the slave buffer with examine data. Retry the upload.

Buffer Overflow

Cause	Not processing data as fast as it comes in. Caused by disc or monitor program which have triggers found too often.
Action	Decrease number of triggers in setup.

Can't Configure Within the Time Limit

Cause	For synchronous protocols the time limit is 15 seconds; for asynchronous or NRZI protocols the time limit is 45 seconds.
Action	After the time limit, Auto Configure resets and starts over.

Checksum Error

Cause	Bit errors have occurred. A bad CRC check occurred when attempting to read or write a file on the disc. Data is assumed to be corrupt when this error occurs.
Action	Retry the operation. Disc may no longer be usable. Try another disc to help isolate the problem.

www.valuetronics.com

Clock Slipped During Run

Cause	Corrupt data received. A portion of the bit stream was lost.
Action	Either BERT detected error in line indicating bad line, or the line is configured wrong.

Controller Error

Cause	The disc controller is not working properly.
Action	Run disc self test to verify disc controller error.

Conversion Error: Menus Reset

Cause	This might occur if the menus being transferred are invalid on the destination analyzer.
Action	Check menu compatibility. Retry menu transfer.

Data Error - Sync Lost

Cause	Indicates that sync was lost after start of test.
Action	Check either line going bad, or if tester was changed on the other end of line.

www.valuetronics.com

Drive Error

Cause	The disc drive is not working properly, a hardware failure has occurred.
Action	Run disc self test to verify disc controller error.

Directory Full

Cause	The directory on the disc is full, and no other files can be written onto the disc. The directory can contain eighty files maximum.
Action	Reduce the number of file names.

Disc Full

Cause	The disc is full of data and no more will fit. This error occurs during write operations.
Action	You can "pack" the disc using the `Pack Disc` softkey to possibly make enough space for the new file to fit.

Disc Not Formatted

Cause	The disc has not been formatted.
Action	The disc must be formatted before you can use it in the HP 4952A.

www.valuetronics.com

Disc Out

Cause	The disc is out at the beginning of a disc operation, or the disc is taken out during a disc operation.
Action	Make sure a disc is properly installed in the disc drive. Press Dir .

Disc Removed During a Read Operation

Cause	When you remove the disc during a load operation, the buffer data is invalid.
Action	Use the EXIT key to exit. Try loading the data again.

Disc Read Error: Buffer Data Invalid

Cause	This may be caused by, checksum error, a record not found, a corrupt file on disc, a broken disc controller, or by a worn out disc.
Action	Use the EXIT key to exit. Try another disc to help isolate the problem.

Directory too Large

Cause	The disc has a directory that is too large. We format ten sectors for 80 entries for the directory.
Action	Reduce the number of files by deleting files not needed.

www.valuetronics.com

DLC Error

Cause	HP 4952A hardware problem.
Action	Contact HP for service.

End of Data Segment

Cause	End of the current 16 blocks (32 Kbytes) of data.
Action	Use next data segment key.

EOF error

Cause	An attempt was made to read more records than exist in the file. The End Of File was found before the read completed.
Action	RETRY, if it fails again - retry on a different disc. If the error persists, suspect a disc controller failure.

End of Disc File

Cause	When you specify a block number beyond the last block on disc.
Action	Correct the block number specified so as to specify a block number on the disc.

www.valuetronics.com

End of Valid Data

Cause	When you scroll to the end of buffer data.
Action	Scroll backward.

File Does Not Exist

Cause	Attempt to load a file that does not exist or has been deleted.
Action	Recheck the directory for the file name or use the Recover function of mass store menu to try to replace the file into the directory so that it may be accessed.

File is Not Recoverable

Cause	Attempt to recover a file that is not recoverable. Probably a file created on an instrument other than an HP 4952A.
Action	Recheck the file and ensure it's compatibility to the HP 4952A.

File Already Exists

Cause	Attempt to store a file with a name and type that already exists.
Action	Recheck the name and/or type to ensure either the name or the type is different from existing files.

www.valuetronics.com

File Not Compatible

Cause	Attempt to load a file that is not compatible with the HP 4951. This file could have the correct type but perhaps might be an application not compatible with the HP 4952A.
Action	Recheck the file and ensure it's compatibility to the HP 4952A.

Framing Error

Cause	Could not find a "1" stop bit in an asynchronous pro tocol during autoconfigure. This error may occur because a transmit clock (TC or ETC) is missing in a synchronous protocol. The HP 4952A assumes an asynchronous protocol, but cannot then find the stop bit.
Action	Check transmit clock indicators on the pod. Check protocol setup. Retry the transmission.

Handshake Error

Cause	The proper handshake responses were not present during printer operation.
Action	Check handshake line for correct responses.

www.valuetronics.com

Improper Format

Cause	The disc format is not compatible with the HP 4952A for runtime use. The disc format is LIF but not formatted on an HP 4952A and will not work at runtime for writing to the disc.
Action	Format the disc in an HP 4952A or an HP 4951C.

Insufficient Data to Configure

Cause	The analyzer cannot detect a clock or idles.
Action	Check the data stream. Go to the setup menu and check for non-standard protocols or data codes.

Invalid Async Framing

Cause	The analyzer cannot determine the async data code.
Action	Go to the setup menu and check for a non-standard data code.

Invalid File Name

Cause	Attempt to enter an invalid file name.
Action	Correct the file name. Allowable characters are A - Z, numbers, and the underscore character. The file name must start with a capitol alpha-numeric character.

www.valuetronics.com

Invalid File Type

Cause	Attempt to load of store a file with a file type that is not valid on an HP 4952A.
Action	Correct the file type to match with a compatible file type on the HP 4952A.

Invalid Mon/Sim menu

Cause	This may occur if you enter "When DTE/DCE" without completing the trigger branching instruction, or if there are other incomplete program statements.
Action	Examine monitor/simulate menu for incorrect parameter. Correct the error and retry

Invalid Sync Characters

Cause	Could not find any of the standard sync characters (ASCII = 1616; EBCDIC = 3232; IPARS = 3F3E).
Action	Try syncing on different characters. The Auto Configure syncs on a selected set of sync characters. The data stream does not contain one of these sync characters.

Invalid asynchronous speed / Invalid synchronous speed

Cause	The bit rate is not within 5% of those listed under "Assumptions".

www.valuetronics.com

Issue ID Request to Enable Slave

Cause	Failure to issue ID request to enable an HP 4951 slave.
Action	You must always Execute this operation immediately after establishing phone communication in order to synchronize remote transfers. Required by the HP 4951A as a slave.

Max Length

Cause	This message appears if you attempt to specify more than 255 characters in a single string.
Action	Reduce the number of characters in the string.

Max Strings

Cause	Appears if the Monitor and Simulate Menus combined contain strings which have a total of more than 2750 characters.
Action	Reduce the number of characters in the string.

Media Wear Protected

Cause	The disc is write protected because of excess wear on the disc. This prevents you from writing on a disc surface that is marginal.
Action	Use another disc and copy this to that new disc as soon as possible.

www.valuetronics.com

Menu Full

Cause	Appears if the Monitor and Simulate Menus combined contain more than 143 steps.
Action	Reduce the number of steps.

Menus Incompatible with HP 4952A

Cause	This might occur for certain menus created by a HP 4955A or HP 4953A.
Action	It may be possible to modify the existing menu to run on the HP 4952A. Examine the menu for any illegal parameters, correct and retry.

New Name Already Exists

Cause	Attempt to rename a file with a name and type that already exists.
Action	Recheck the name and/or type to ensure either the name or the type is different from existing files.

No Application Loaded

Cause	Attempt to store an application when no application was loaded in the application portion of ram.
Action	Load the application desired into the HP 4952A before trying to store it.

www.valuetronics.com

No Data in Buffer -- Use EXIT Key to Exit

Cause	This occurs if the buffer is empty when you go to the Examine Data Menu.
Action	Monitor On-Line, or load from the disc to fill the buffer.

No Data in Capture Buffer

Cause	This occurs if the buffer is empty when you try to store a menus & data file or a data file.
Action	Monitor On-Line, or load from the disc to fill the buffer.

No displayable data in buffer for the selected display format

Cause	This indicates that the buffer contains non-displayable data, such as lead transitions, or if in the Packet display there are no packets.
Action	Use Data & State display format to see the lead transitions, and all other data, if any.

No Data Present

Cause	There is no line data.
Action	Both data and idle conditions must be present.

www.valuetronics.com

No File; Run Aborted

Cause	The menu requesting the run-time disc data file was exited prior to being executed.
Action	None - Message informs you that the run-time disc data file was exited prior to being executed.

No Idles

Cause	There are insufficient idles on the line.
Action	Both data and idles must be present. Asynchronous protocols must have a minimum of two idle characters between messages.

No Pod Attached

Cause	The pod is not attached or the connection has come loose.
Action	Be sure to turn off the power before connecting the interface pod.

No Sync Characters

Cause	Could not find any sync characters.
Action	Try to sync on idles to capture all the data on the line and then check the data with examine data menu for the presence of sync characters.

www.valuetronics.com

Non LIF Format

Cause	The disc has been formatted, but the format is not the LIF format used by the HP 4952A.
Action	Format the disc in/on a HP 4952A.

Nonstandard Baud Rate

Cause	The bit rate is not within 5% of the selected value.
Action	Adjust bit rate of system the HP 4952A is attached to monitoring/simulating.

No More Highlights

Cause	When you press the Next Hilit key and there are no more highlights.
Action	View highlights again by returning to start of buffer (use Spec Block) and then Next Hilit . For frame packet displays, try Next Segment then Next Hilit .

Operation Not Valid for HP 4952A

Cause	The remote operation is one that only an HP 4955A or HP 4953A can perform.
Action	Amend operation to comply with HP 4952A capabilities.

www.valuetronics.com

Printer Error

Cause	Other printer problems.
Action	Verify connections and printer setup.

Receiver Overrun

Cause	Line data too fast.
Action	Check configuration of line. May be noise on data or clock.

Record Not Found

Cause	A track or sector was not found during a disc operation which could indicate a corrupt format on the disc or a worn disc.
Action	Re-try the read or write operation.

Remote Timeout

Cause	The print operation timed out.
Action	If persistent, contact your HP Sales/Service Office.

Single Sided Disc

Cause	The disc has been formatted as a single-sided disc.
Action	The HP 4952A uses a double-sided format. Use a double-sided disc.

www.valuetronics.com

Seek Error

Cause	The disc controller can not find a location on the disc that it expects to find.
Action	Retry the operation. Retry the operation on another disc.

Start of Valid Data

Cause	When you scroll to the beginning of buffer data.
Action	Scroll forward.

Sync Lost One or More Times

Cause	A "Data Error - Sync Lost" error has occurred at least once.
Action	Check either line going bad, or if tester was changed on the other end of the line. Waiting for data.

Trying Again to Capture Data

Cause	The analyzer does not capture data and cannot find a clock.
Action	Press Auto Cnfg again. If that does not work go to the Setup Menu and manually set up the instrument.

www.valuetronics.com

Waiting for Data

Cause	Either there is no line data, or the analyzer is still collecting sufficient data to make a determination.
Action	Both data and idle conditions must be present.

Waiting for Frames

Cause	The analyzer has detected a bit-oriented protocol but cannot caputre frames.
Action	Press **Auto Cnfg** and try to capture frames or go to the setup menu and manually configure the analyzer.

Waiting for Idles

Cause	There are insufficient idles on the line. Both data and idles must be present.
Action	Character oriented protocols must have a minimum of ten idle characters between messages, and bit oriented protocols must have ten flags between frames

Waiting for Messages

Cause	The analyzer has detected a character-oriented protocol but cannot find the sync characters.
Action	Press **Auto Cnfg** or go to the Setup Menu and manually configure the analyzer.

www.valuetronics.com

Write Protected

Cause	The disc "write protect" tab is in the "protect" position. The tab will not be visible and a physical hole will exist in that portion of the disc case.
Action	To store information on a write protected disc, slide the protect tab to the opposite position.

www.valuetronics.com

B

Specifications and Accessories

- Specifications
- Operating Characteristics
- Accessories
- Options
- Interface Accessories

www.valuetronics.com

Specifications

Weight (Including Interface pod and cables)

Net Wt:	7.0 kg. (15.4 lbs.)
Shipping:	12.5 kg. (27.6 lbs.)

Size

Height: 16.0 cm, width 27.9 cm, depth 34.3 cm. (6.3 x 11.0 x 13.5 in.)

Temperature

Operating:	0 ^{0}C to +40 ^{0}C (+32 ^{0}F to +104 ^{0}F) **
Storage:	-40 ^{0}C to +75 ^{0}C (-40 ^{0}F to +167 ^{0}F)

** The disc drive and optional extended memory should only be operated at temperatures of +5 ^{0}C to +40 ^{0}C (+41 ^{0}F to +104 ^{0}F) and stored at +4 ^{0}C to +53 ^{0}C (+39 ^{0}F to + 127 ^{0}F).

Power Requirements

90 to 264 Vac: 48 to 66 Hz single phase, or 125 to 375 VDC.
Typical less than 20 VA, maximum less than 35 VA.

Electromagnetic Capability

Complies with VDE 0871/6.78 Limit B, and is licensed per FTZ 1046/84.

www.valuetronics.com

Operating Characteristics

Operating characteristics are features and capabilities that the protocol analyzer exhibits. They are not specifications.

Protocols

X.25, SNA (opt.), SDLC, BSC, HDLC, IPARS, X.21 (opt), DDCMP and most character asynchronous or synchronous protocols.

Data Transmission Modes

Synchronous, asynchronous, NRZI, and externally clocked NRZI.

Data Transfer Rates (bps)

50, 75, 110, 134.5, 150, 200, 300, 600, 1200, 1800, 2000, 400, 3200, 3600, 4800, 7200, 9600, 12000, 14400, 16000, 19200, 38400, 48000, 56000, 64000 and EXTERNAL for synchronous data lines.

COPs will have different maximum transfer rates depending on the protocol.

Not Supported: Asynchronous (bps): 12000, 14000, 16000, > NRZI (bps): 50, 12000, 16000 Async BERT (bps): 12000, 16000, teletext 1200/75

Data Codes

ASCII, EBCDIC, Baudot, Six Bit Transcode, IPARS, EBCD, and Hex. Also JIS-7, JIS-8, and EBCDIK (with Katakana option).

Capture Memory

32 Kbytes of nonvolatile RAM (768K Kbytes of optional volatile extended memory) for storing data characters, timing and lead status.

Mass Storage

Microfloppy disc stores 613 Kbytes of data, timing information, setups, and programs.

www.valuetronics.com

Lead Status

The status of five control leads are stored for each interface. They are RTS, CTS, DTR, DSR, and CD for RS-232C/V.24 and V.35 interfaces; CS, RS, RR, TR, and DM for RS-449 interface; T, R, I, and C for X.21 interface.

Highlights

Most recent 63 trigger events.

Character Framing

5, 6, 7, or 8 information bits, plus parity. For asynchronous systems select 1, 1.5, or 2 stop bits per character.

Error Checking

CRC-CCITT, CRC-CCITT preset 0, CRC-16, CRC-12, CRC-6, LRC, and parity.

Triggers

63 triggers for characters, errors, interface lead transitions and softkeys.

Timers

Five, each with a maximum count of 65535 msec. Resolution 1 msec.

Counters

Five, maximum count 65535.

Keyboard

Full ASCII keyboard with six softkeys and cursor control.

Parity

Odd, even, none, ignore.

Display

High resolution 13 cm (5 in) diagonal with 16 lines and 32 characters per line.

www.valuetronics.com

Display Formats

DTE data over DCE data, Data and Lead Status, DTE data only, DCE data only, Frame and Packet decode, Packet only decode, and X.21 data and state.

Send Strings

255 characters per string maximum, 1750 characters total.

Remote Capability

Complete unattended remote control. Can be controlled by another HP protocol analyzer or computer to transfer data, setups, and test programs.

Bit Error Rate Testing

Simultaneously measures bit errors, block errors, errored seconds, and percent error free seconds for synchronous, asynchronous or isochronous data links.

Block Size: 511, 1000, 2047.
Patterns: 63, 511, 2047 or 4095 pseudo random sequence.
Character Framing: Select 5,6,7, or 8 bit per character and parity.
Inject Errors Function: Single errors or bursts of errors.

Clock Speed Accuracy

For BERT operation, clocks provided on the physical interface are accurate to 0.01%.

For other operations, the following clock speeds provided on the physical interface are accurate to 0.01%: 75, 110, 134.5, 150, 200, 300, 600, 1200, 1800, 2400, 3200, 3600, 4800, 7200, 9600, 14400, 19200, 38400, 48000, 56000, and 64000.

For your convenience, the following additional clock speeds have been provided, however the clock accuracy is not specified: 50, 2000, 12000, and 16000.

www.valuetronics.com

Accessories

Accessories Supplied

Power Cord	See Appendix D
Pod-Instrument Cable (for all pods)	HP 5062-2144
Operating Manual	HP 04952-90082
Getting Started	HP 04952-90083
Transportation Disc	HP 5060-7177
Extra Fuse	HP 2110-0758
Utility Disc	

Accessories Available

Data tracker breakout box	HP 92204N
Soft vinyl carrying case	HP 18190A
Hard cover transit case	HP 9211-1291
ThinkJet printer for ASCII printouts (does not include interface cable)	HP 2225D
Box of 10 3.5-inch double-sided discs	HP 92192A
Extended memory plus retrofit kit	HP 04952-69501
Rack mount for 4952A instrument (7" vert)	HP 18195A
Rack mount for 4952A pod (7" vert)	HP 18196A
Video Print Interface	HP 18340A
Extra HP 4952A Operating Manual	HP 04952-90082
Extra HP 4952A Getting Started Manual	HP 04952-90083
Disc Drive Cleaning Kit	HP 09122-89415

www.valuetronics.com

Problem Solving Accessories:

HP 18160A: Combination RS-232/V.24 and V.35 Interface Pod
HP 18174A: RS-449/422A/423A Interface Pod
HP 18177A/G: V.35 Interface Pod
HP 18179A: RS-232/V.24 Interface Pod with complete breakout box
HP 18180A: Combination RS-232/V.24 and RS-449/422A/423A Interface Pod
HP 18260A: X.21 and RS-232/V.24 Interface Kit
HP 18261A: SNA Analysis software
HP 18263A: 3270 Installation and Maintenance Software
HP 18264A: X.25 and SNA Level Link Level Statistics
HP 18265A: DDCMP Analysis
HP 18266A: Enhanced X.25 Analysis
HP 18267A: X.25 Test Library and Emulator
HP 18268A: ISDN Basic Rate Analysis
HP 18269A: G.821 BERT
HP 18270A: ISDN Basic Rate Channel Access and Analysis

One of the cables listed below is included in the appropriate interface pod.

RS-232/V.24 Y-ribbon cable	HP 18173-61602
RS-449 Y-ribbon cable	HP 18174-61601
V.35 Y-ribbon cable	HP 18177-61601

www.valuetronics.com

Options

Option 002	Extended Memory Plus 3/4 Mbyte extended capture buffer 128 Kbyte non-volatile program RAM
Option 101	Adds accessory 18174A (RS-449/422A/423A)
Option 102	Adds accessory 18180A (Combination RS-232C/V.24 and RS-449/422A/423A).
Option 103	Adds accessory 18179A (RS232C/V.24 with complete breakout box)
Option 104	Adds HP 18260A (Combination X.21 and RS-232C/V.24).
Option 105	Adds HP 18177A/G (V.35).
Option 106	Adds HP 18160A (V.35 and RS-232C/V.24
Option 107	Adds HP 18270A ISDN Basic Rate Channel Access and Analysis
Option 501	French Manual
Option 502	German Manual
Option 908	Rack Mount Kit (14" vert.)
Option W30	3 year extended hardware support. Provides 2 additional years of return-to-HP hardware support (for 2nd and 3rd years).

www.valuetronics.com

Interface Accessories

HP 18160A (RS-232C/V.24 and V.35)

Interface contains both RS-232C/V.24 and V.35 interfaces.

HP 18174A (RS-449/422A/423A)

Balanced RS-422A drivers. Interface activity indicators: DS, RD, ST, RT, RS, CS, TR, DM, and RR.

HP 18177A/G (V.35)

Interface activity indicators: DTE, DCE. SCE, SCT, SCR, RS, DTR, CS, DSR, and CD.

HP 18179A (RS-232C/V.24)

Full breakout box with 25 switches. Interface Activity Indicators: DTE, DCE, TC, RC, RTS, CTS, DTR, DSR, CD, ETC.

HP 18180A (RS-232/V.24 and RS-449/422A/423A)

Activity indicators are the same leads as HP 18179A and HP 18174A.

HP 18260A (RS-232/V.24 and X.21)

Interface activity indicators: DTE, DCE, TC, RC, RTS, CTS, DTR, DSR, CD for the RS-232 portion, and R, T, C and I for the X.21 portion.

HP 18270A ISDN Basic Rate Channel Access and Analysis

Interface kit includes HP 18268A ISDN software as well as the Interface Module.

www.valuetronics.com

www.valuetronics.com

C

OSI Level 2 and 3 Tables

- Level 2: The Data Link Interface
- Level 3

www.valuetronics.com

Level 2: The Data Link Interface

Character Oriented Protocols: BSC

| SYN | SYN | SOH | Header | STX | Text | ITB / ETX / ETB | BCC | BCC |

Bit Oriented Protocols

| Flag | Address | Control | Data | FCS | FCS | Flag |

Flags: Flags (7_E) act as frame delimiters

Address Field: Command frames contain receiving station's address. Response frames contain sending station's address.

Control Field: Identifies function and purpose of the frame. Contains commands, responses, and sequence numbers.

Information Field: Any number of bits, typically in multiples of 8 (octets).

FCS: Frame Checking Sequence for Error Detection.

www.valuetronics.com

Types Of BOP Frames (Indicated by the following control fields)

1. Information (I) Frames: For transferring information.

| N(R) | P/F | N(S) | 0 |

2. Supervisory (S) Frames: To acknowledge I frames, request re-transmission of I frames, and to communicate status (busy, ready).

Receive Ready (RR)

| N(R) | P/F | 0 0 | 0 1 |

Reject (REJ)

| N(R) | P/F | 0 1 | 0 1 |

Receive Not Ready (RNR)

| N(R) | P/F | 1 0 | 0 1 |

Selective Reject (SREJ)

| N(R) | P/F | 1 1 | 0 1 |

3. Unnumbered (U) Frames: To issue commands and responses.

| Type | P/F | Type | 1 1 |

www.valuetronics.com

Unnumbered Format Commands (P=Poll, F=Final)

Control Field Bits	Mnemonic	Name
msb lsb		
1 0 0 P 0 0 1 1	SNRM	Set Normal Response Mode
0 0 0 P 1 1 1 1	SARM	Set Asynchronous Response Mode
0 0 1 P 1 1 1 1	SABM	Set Asynchronous Balanced Mode
1 1 0 P 1 1 1 1	SNRME	Set Normal Response Mode Extended
0 1 0 P 1 1 1 1	SARME	Set Asynchronous Response Mode Extended
0 1 1 P 1 1 1 1	SABME	Set Asynchronous Balanced Mode Extended
0 0 0 P 0 1 1 1	SIM	Set Initialization Mode
0 1 0 P 0 0 1 1	DISC	Disconnect
0 0 0 P 0 0 1 1	UI	Unnumbered Information
0 0 1 P 0 0 1 1	UP	Unnumbered Poll
1 0 0 P 1 1 1 1	RSET	Reset
1 0 1 P 1 1 1 1	XID	Exchange Identification

Unnumbered Format Responses

0 1 1 F 0 0 1 1	UA	Unnumbered Acknowledgement
0 0 0 F 1 1 1 1	DM	Disconnected Mode
0 0 0 F 0 1 1 1	RIM	Request Initialization Mode
0 0 0 F 0 0 1 1	UI	Unnumbered Information
1 0 0 F 0 1 1 1	FRMR	Frame Reject
1 0 1 F 1 1 1 1	XID	Exchange Identification
0 1 0 F 0 0 1 1	RD	Request Disconnect

www.valuetronics.com

Sample Monitor Menu Triggers ("x" = don't care)

When DTE	Trigger on data from the DTE
When DTE (flag) 0_1	Address (second byte)
When DTE (flag) 0_1 xxxxxxxx	Control Field, don't cares (3rd byte)
When DTE (flag) 0_1 xxxxxx11	U-Frame
When DTE (flag) 0_1 100x0011	Type of U-Frame = SNRM
When DTE (flag) 0_1 10010011	Poll bit set to 1
When DTE (flag) 0_3 xxxx0001	S-Frame
When DTE (flag) 0_3 10110001	S-Frame, Type=RR, N(R)=5, P/F=1
When DTE (flag) 0_3 00100010	I-Frame, N(R)=1, N(S)=1, P/F=0 (This is an I-Frame)

www.valuetronics.com

Level 3

Packet Construction (MODULO 8)

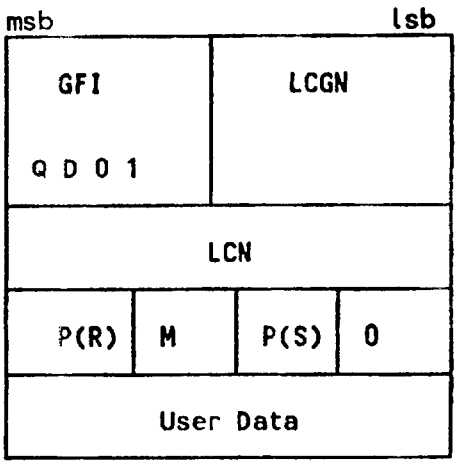

Packet Types RRR=N(R), SSS=N(S)

	msb lsb
Data	RRRMSSS0
Call Request	00001011
Call Accepted	00001111
Clear Request	00010011
Clear Confirmation	00010111
Interrupt	00100011
Interrupt Conf.	00100111
Receive Ready	RRR00001
Receive Not Ready	RRR00101
Reject	RRR01001
Reset Request	00011011
Reset Confirmation	00011111
Restart Request	11111011
Restart Conf.	11111111
Diagnostic	11110001
Registration Request	11110011
Registration Conf.	11110111

LCGN = Logical Channel Group Number
LCN = Logical Channel Number
Logical Channel Identifier = LCN + LCGN
P(R) = Next Receive Packet Expected
P(S) = Packet Send Sequence Number
M-bit = More Data Bit
Q-bit = Data Qualifier Bit
D-bit = Delivery Confirmation Bit

www.valuetronics.com

Data Packets

Modulo 8

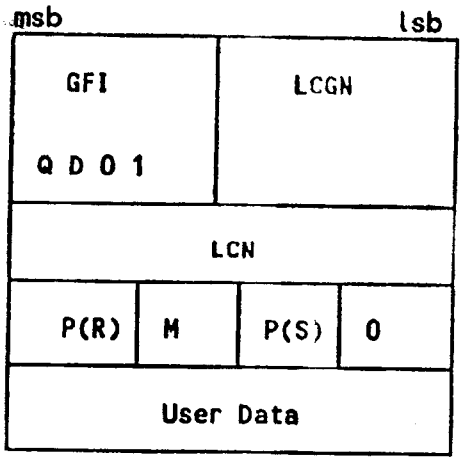

Octet 1

Octet 2

Octet 3

Octet 4

Modulo 128

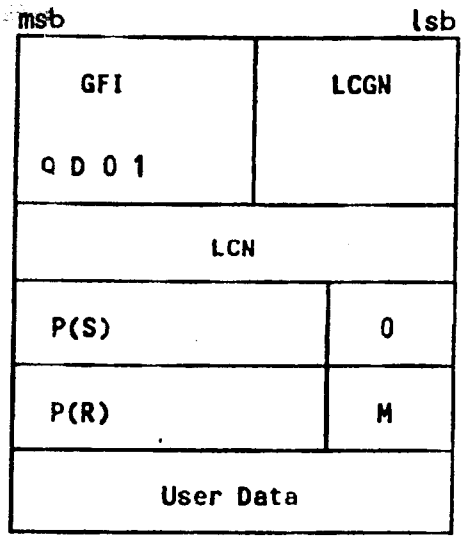

www.valuetronics.com

Call Request/ Incoming Call Packet

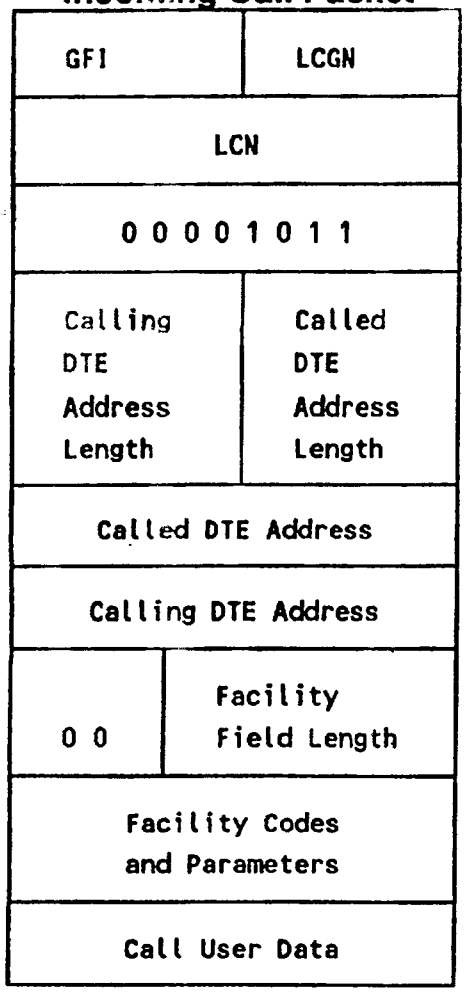

Octet 1
Octet 2
Octet 3
Octet 4
Octet 5
Octet 6
Octet 7
Octet 8

Call Accepted/ Call Connected Packet

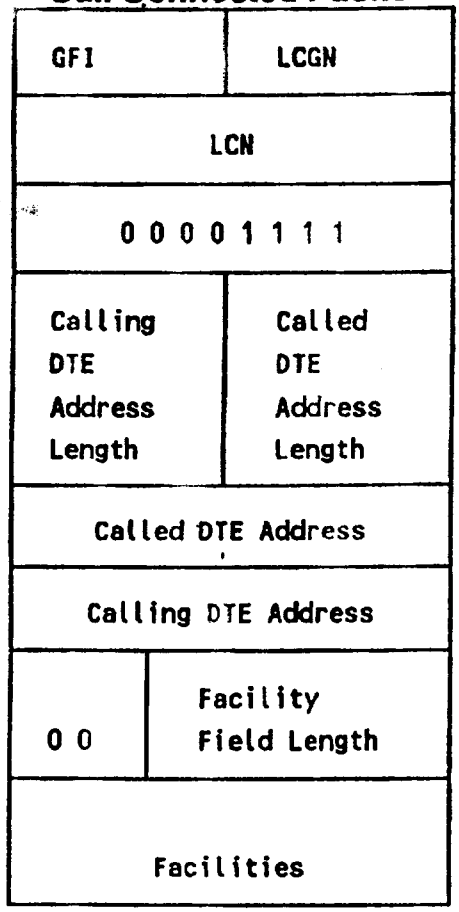

www.valuetronics.com

D

Service Information

- Power Requirements
- Adjustments
- Performance Verification
- Packaging

www.valuetronics.com

Power Requirements

Warning Before connecting the HP 4952A to any line voltage, be sure the proper fuse is installed. Damage to the instrument may occur if the wrong fuse is installed. See procedures which follow to replace the fuse.

Warning Before connecting the HP 4952A to any line voltage, the protective earth terminal of the instrument must be connected to the protective conductor of the line power cable. The line plug must be inserted in an outlet provided with a protective earth contact. The protective conductor must not be negated by the use of an extension cord without a protective grounding conductor. Grounding one conductor of a two-conductor outlet does not provide an instrument ground.

Power Cable

The HP 4952A power cable has three wires. When connected to an appropriate power receptacle, this cable grounds the instrument chassis. The type of power cable shipped with each instrument depends on the country of destination (see Table D-1). If the appropriate power cable is not included with the instrument, notify the nearest Hewlett-Packard Sales and Service office for a replacement.

Line Voltage Selection

The line voltage selector is not available on the HP 4952A as the line voltage is not selectable.

www.valuetronics.com

Changing Fuses

The fuse is located behind the cover that surrounds the power switch. The fuse (HP #2110-0758) is rated at .6A, 250V.

To change the fuse:

1. Unplug the instrument and remove the line cord from the instrument.
2. Insert a small screwdriver into the slot at the top of the cover. Pry out the cover from the top.
3. Pull out the light gray fuse holder located under the line switch. Replace the fuse.
4. Re-insert the fuse holder with the arrow facing in the same direction as the two arrows on the cover.
5. Close the cover.

Adjustments

There are no operator adjustments for the HP 4952A. Any internal adjustments must be made by a qualified service person.

www.valuetronics.com

Table D-1. Power Cable Part Numbers

Plug Type	Cable HP Part Number	CD	Plug Description	Cable Length (inches)	Cable Color	For Use In Country
250V 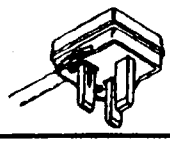	8120-1351 8120-1703	0 6	Straight *BS1363A 90°	90 90	Mint Gray Mint Gray	United Kingdom, Cyprus, Nigeria, Rhodesia, Singapore
250V 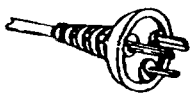	8120-1369 8120-0696	0 4	Straight *NZSS198/ASC1 2 90°	79 87	Gray Gray	Australia, New Zealand
250V	8120-1689 8120-1692	7 2	Straight *CEE7-Y11 90°	79 79	Mint Gray Mint Gray	East and West Europe, Saudi Arabia, Egypt, So. Africa, India (unpolarized in many nations)
125V 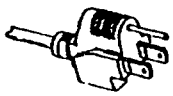	8120-1348 8120-1398 8120-1754 8120-1378 8120-1521 8120-1676	5 5 7 1 6 2	Straight *NEMA5-15P 90° Straight *NEMA5-15P Straight *NEMA5-15P 90° Straight *NEMA5-15P	80 80 36 80 80 36	Black Black Black Jade Gray Jade Gray Jade Gray	United States, Canada, Japan (100V or 200V), Mexico, Philippines, Taiwan
250V	8120-2104	3	Straight *SEV1011 1959-24507 Type 12	79	Gray	Switzerland
250V	8120-0698	6	Straight *NEMA6-15P			United States Canada
220V 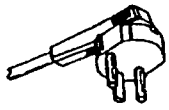	8120-1957 8120-2956	2 3	Straight *DHCK 107 90°	79 79	Gray Gray	Denmark
250V 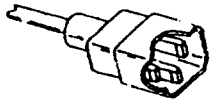	8120-1860	6	Straight *CEE22-VI (Systems Cabinet use)			
250V 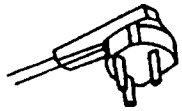	8120-4600 8120-4211	8 7	Straight BS 546/SABS 164 90°	98 98	Black Black	So Africa, India

*Part number shown for plug is industry identifier for plug only. Number shown for cable is HP Part Number for complete cable including plug.
E = Earth Ground; L = Line; N = Neutral

D - 4 Service Information

www.valuetronics.com

Performance Verification

When you turn the instrument on, self tests are automatically performed. These tests are completed in about 10 seconds. When the self tests are complete, the Top Level Menu is displayed. If the instrument comes up in the Top Level Menu, the basic operation of the analyzer is verified. If there is a failure, the instrument does not come up in the Top Level Menu; instead it displays the failures that occurred during the self-test sequence.

Besides the automatic turn-on self test checks, use the following procedures to test your HP 4952A more completely.

Caution All data and menus will be lost if you execute the Loop Tests. This includes the contents of the Option 002 Memory.

Loop Tests

Note An interface pod MUST be attached before executing the Loop Test. If the pod is not attached, the DLC field will indicate an error, and display the status message FF.

The loop tests do more in depth testing of the HP 4952A. The loop tests run the basic power-on PV tests plus expanded versions of these tests. You do not need to have a disc installed in the disc drive.

To run the loop tests, press Self Test in the Top Level Menu and then press loop. A test display appears listing the tests that are performed. Press Execute to start the loop tests. Press EXIT to stop the tests. The disc drive indicator lights once during each loop so you can tell that the tests are being performed. Errors are recorded on the display. In most cases, an error means that repair is necessary.

DLC errors can possibly indicate problems with the interface pod instead of the main instrument. If DLC errors are indicated, try another interface pod to isolate the problem.

www.valuetronics.com

Disc Drive Checks

If files can be loaded and stored correctly, the proper operation of the disc mechanism is verified. To detect a disc failure, merely store data or menus onto disc, press Reset to re-initialize the menus and clear memory, and then load the same file back into the instrument. The menus and data should be the same as when they were stored. A typical procedure would be like the following two checks.

Disc Format Check

1. Insert a blank disc into the disc slot.

2. Press Mass Store on the Top Level Menu

3. You should be using a blank disc, or one that does not contain files you wish to keep. In the mass store menu, press Format and then Execute .

4. The disc should initialize properly. Use this disc for the next check.

Disc Read/Write Check

To check the disc read/ write circuits, install a blank, formatted disc in the disc drive and follow the procedure below.

1. In the Setup menu, use the default conditions, except set the bits/sec to 64 k and set the display mode to DCE.

2. In the simulate menu, simulate a DCE, and enter the following program.

```
Block 1:
Start Display
   and then
Start Disc

Press Next Block

Block 2:
Send  DISC TEST  GG
   and then
GOTO  Block 2
```


www.valuetronics.com

Press EXIT to return to the Top Level Menu.

3. In the Run menu, press Simulate , type in the file name "DTEST", and press Execute . When the disc is full, a "Disc Full" message is displayed.

4. Next, read the file that you just stored on disc. In the mass store menu, press Load , type in the file name you used when storing, and press Execute . Notice that the file size should be 2449 sectors.

5. EXIT the Mass Store menu and press Examine Data to view the data.

Keyboard Test

The keyboard test verifies that the HP 4952A correctly identifies each key pressed.

1. Turn on the HP 4952A

2. Press MORE

3. Press the Self Test softkey in the Top Level Menu.

4. Press any key on the keyboard.

5. The display should read: LAST KEY PRESSED: "(name of key is displayed)". The RETURN key effectively performs the same operation as "cursor down".

6. Press EXIT to end the test and display the self-test menu.

www.valuetronics.com

Display Test

Press **Self Test** in the Top Level Menu and then select **CRT Tests**. There are five different display patterns you can select to verify your display.

Align Pattern

Use this pattern to check all display attributes.

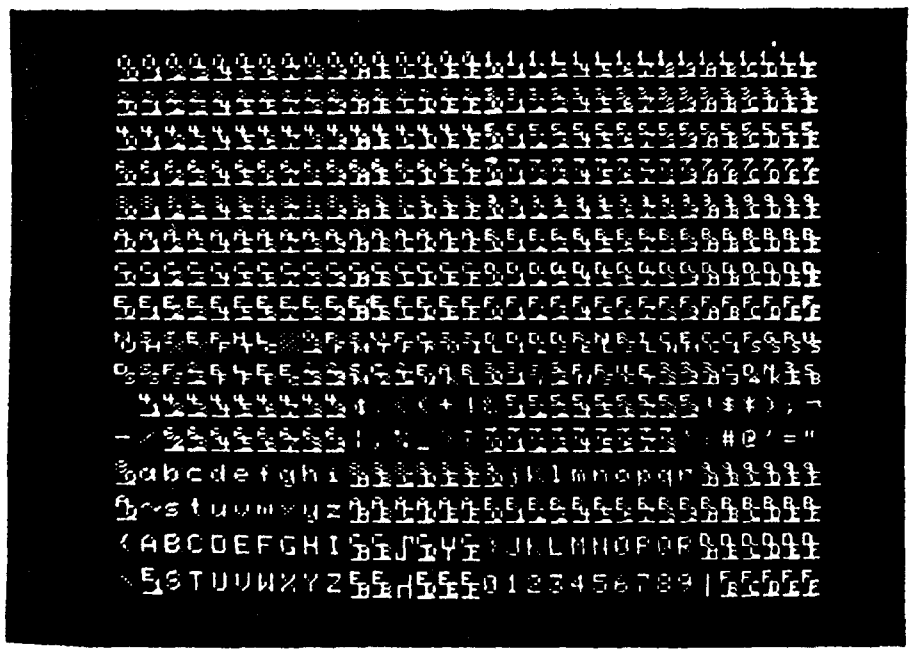

Figure D-1. Char Set 1 Test Pattern

Video Pattern

Gives you alternating character cells of inverse video, blank, and half-bright video. The following pattern is repeated over the entire display.

Inv Video

This pattern is a full, inverse-video display.

www.valuetronics.com

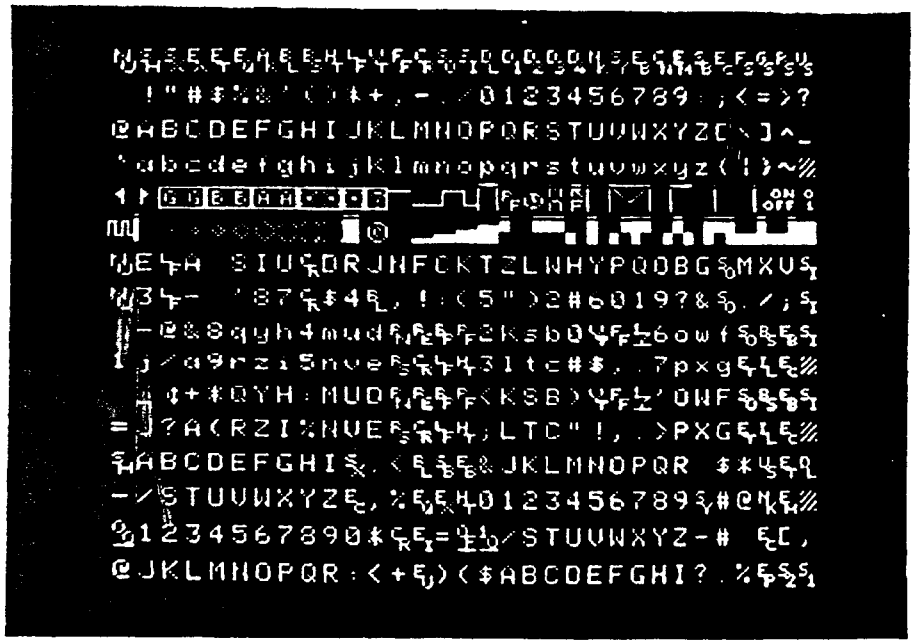

Figure D-2. Char Set 2 Test Pattern

Extended Tests

The **Ext Tests** softkey is used by trained service personnel when servicing or repairing your instrument. Do not use the **Cal FDC**, **Disc BERT** or **Ext RAM** softkeys.

Packaging

If the instrument is returned to Hewlett-Packard for service, complete one of the blue repair tags located in the pouch and attach it to the instrument.

Caution Always install the transportation disc in the disc drive when transporting or shipping the HP 4952A.

---

www.valuetronics.com

Original Packaging

Containers and materials identical to those used in factory packaging are available through Hewlett-Packard offices. If the instrument is being returned to Hewlett-Packard for service, attach a tag indicating the type of service required, return address, model number, and full serial number. Mark the container FRAGILE to ensure careful handling. In correspondence, refer to the instrument by model number and full serial number.

Other Packaging

Wrap the instrument in heavy paper or plastic. Use a strong shipping container: a double-walled carton made of 350-pound test material is suitable. Use a layer of shock-absorbing material 70-to 100mm (3 to 4 inches) thick around the sides of the instrument to provide firm cushioning and to prevent movement inside the container. Seal the container securely. Mark shipping container FRAGILE to ensure careful handling. In any correspondence, refer to the instrument by model number and full serial number.

www.valuetronics.com

E

External Video Output

www.valuetronics.com

Introduction

The external video output is located on the rear panel of the HP 4952A. It is used for displaying the internal CRT monitor on an external monitor.

RS-170 is the electrical characteristic for the video signal on monochrome video monitors. The HP 4952A utilizes this specification to display the internal CRT monitor on an external monitor. An example monitor is the HP 82913A which utilizes this standard.

RS-170 specifies the following: 525 lines per frame, 60 Hz refresh rate, a horizontal scan rate of 15.75 kHz.

Usage

The HP 4952A does not work well with standard television monitors because standard television monitors are designed to overscan the picture/frame displayed. This means that standard television monitors are not designed to display the edges of the frame received (approximately 10% of the frame is not shown). The HP 4952A does display 100% of the frame and therefore the frame displayed on a standard television would not show the 10% of the edges of the frame shown on the internal HP 4952A monitor screen.

The physical connector on the back of the HP 4952A is a 75 ohm BNC type connector.

Recommended Video Monitors

Europe	82913A opt. 1	12" screen	& cable	5061-6533
U.S.	82913A	12" screen	& cable	8120-4703

www.valuetronics.com

F

www.valuetronics.com

www.valuetronics.com

G

Data Code Tables

- ASCII Character Conversion Table
- EBCDIC Character Conversion Table
- Baudot Character Conversion Table
- EBCD Character Conversion Table
- Transcode Character Conversion Table
- IPARS Character Conversion Table

www.valuetronics.com

Table G-1. ASCII Character Conversion Table

Dec Value	Binary	Hex	Displayed Character	Keyboard Mnemonic	Description
0	000 0000	00	NU	NUL	Null
1	000 0001	01	SH	SOH	Start of Header
2	000 0010	02	SX	STX	Start of Text
3	000 0011	03	EX	ETX	End of Text
4	000 0100	04	ET	EOT	End of Transmission
5	000 0101	05	EQ	ENQ	Enquiry
6	000 0110	06	AK	ACK	Positive Acknowledge
7	000 0111	07	BL	BEL	Bell
8	000 1000	08	BS	BS	Back Space
9	000 1001	09	HT	HT	Horizontal Tab
10	000 1010	0A	LF	LF	Line Feed
11	000 1011	0B	VT	VT	Vertical Tab
12	000 1100	0C	FF	FF	Form Feed
13	000 1101	0D	CR	CR	Carriage Return
14	000 1110	0E	SO	SO	Shift Out
15	000 1111	0F	SI	SI	Shift In
16	001 0000	10	DL	DLE	Data Link Escape
17	001 0001	11	D1	DC1	Device Control 1
18	001 0010	12	D2	DC2	Device Control 2
19	001 0011	13	D3	DC3	Device Control 3
20	001 0100	14	D4	DC4	Device Control 4
21	001 0101	15	NK	NAK	Negative Acknowledge
22	001 0110	16	SY	SYN	Synchronous Idle
23	001 0111	17	EB	ETB	End of Transmission Block
24	001 1000	18	CN	CAN	Cancel
25	001 1001	19	EM	EM	End of Medium
26	001 1010	1A	SB	SUB	Substitute
27	001 1011	1B	EC	ESC	Escape
28	001 1100	1C	FS	FS	File Separator
29	001 1101	1D	GS	GS	Group Separator
30	001 1110	1E	RS	RS	Record Separator
31	001 1111	1F	US	US	Unit Separator
32	010 0000	20	(space)		
33	010 0001	21	!		
34	010 0010	22	"		
35	010 0011	23	#		
36	010 0100	24	$		
37	010 0101	25	%		
38	010 0110	26	&		
39	010 0111	27	'		
40	010 1000	28	(		
41	010 1001	29	)		
42	010 1010	2A	*		
43	010 1011	2B	+		
44	010 1100	2C	,		

www.valuetronics.com

Table G-1. ASCII Character Conversion Table (Continued)

Dec Value	Binary	Hex	Displayed Character	Keyboard Mnemonic	Description
45	010 1101	2D	-		
46	010 1110	2E	.		
47	010 1111	2F	/		
48	011 0000	30	0		
49	011 0001	31	1		
50	011 0010	32	2		
51	011 0011	33	3		
52	011 0100	34	4		
53	011 0101	35	5		
54	011 0110	36	6		
55	011 0111	37	7		
56	011 1000	38	8		
57	011 1001	39	9		
58	011 1010	3A	:		
59	011 1011	3B	;		
60	011 1100	3C	<		
61	011 1101	3D	=		
62	011 1110	3E	>		
63	011 1111	3F	?		
64	100 0000	40	@		
65	100 0001	41	A		
66	100 0010	42	B		
67	100 0011	43	C		
68	100 0100	44	D		
69	100 0101	45	E		
70	100 0110	46	F		
71	100 0111	47	G		
72	100 1000	48	H		
73	100 1001	49	I		
74	100 1010	4A	J		
75	100 1011	4B	K		
76	100 1100	4C	L		
77	100 1101	4D	M		
78	100 1110	4E	N		
79	100 1111	4F	O		
80	101 0000	50	P		
81	101 0001	51	Q		
82	101 0010	52	R		
83	101 0011	53	S		
84	101 0100	54	T		
85	101 0101	55	U		
86	101 0110	56	V		
87	101 0111	57	W		
88	101 1000	58	X		
89	101 1001	59	Y		

www.valuetronics.com

Table G-1. ASCII Character Conversion Table (Continued)

Dec Value	Binary	Hex	Displayed Character	Keyboard Mnemonic	Description
90	101 1010	5A	Z		
91	101 1011	5B	[		
92	101 1100	5C	\		
93	101 1101	5D	]		
94	101 1110	5E	^		
95	101 1111	5F	_		
96	110 0000	60	`		
97	110 0001	61	a		
98	110 0010	62	b		
99	110 0011	63	c		
100	110 0100	64	d		
101	110 0101	65	e		
102	110 0110	66	f		
103	110 0111	67	g		
104	110 1000	68	h		
105	110 1001	69	i		
106	110 1010	6A	j		
107	110 1011	6B	k		
108	110 1100	6C	l		
109	110 1101	6D	m		
110	110 1110	6E	n		
111	110 1111	6F	o		
112	111 0000	70	p		
113	111 0001	71	q		
114	111 0010	72	r		
115	111 0011	73	s		
116	111 0100	74	t		
117	111 0101	75	u		
118	111 0110	76	v		
119	111 0111	77	w		
120	111 1000	78	x		
121	111 1001	79	y		
122	111 1010	7A	z		
123	111 1011	7B	{		
124	111 1100	7C	|		
125	111 1101	7D	}		
126	111 1110	7E	~		
127	111 1111	7F		DEL	Delete

www.valdetronics.com

Table G-2. EBCDIC Character Conversion Table

Dec Value	Binary	Hex	Displayed Character	Standard Mnemonic	Keyboard Entry If Other Than Standard	Description
0	0000 0000	00	NU	NUL		Null
1	0000 0001	01	SH	SOH		Start of Header
2	0000 0000	02	SX	STX		Start of Text
3	0000 0011	03	EX	ETX		End of Text
4	0000 0100	04	PF	PF	(hex)	Punch Off
5	0000 0101	05	HT	HT		Horizontal Tab
6	0000 0110	06	LC	LC	(hex)	Lower Case
7	0000 0111	07		DEL		Delete
8	0000 1000	08	(hex)			
9	0000 1001	09	RF	RLF	(hex)	
10	0000 1010	0A	SM	SMM	(hex)	Start Manual Message
11	0000 1011	0B	VT	VT		Vertical Tab
12	0000 1100	0C	FF	FF		Form Feed
13	0000 1101	0D	CR	CR		Carriage Return
14	0000 1110	0E	SO	SO		Shift Out
15	0000 1111	0F	SI	SI		Shift In
16	0001 0000	10	DL	DLE		Data Link Escape
17	0001 0001	11	D1	DC1		Device Control 1
18	0001 0010	12	D2	DC2		Device Control 2
19	0001 0011	13	D3	DC3		Device Control 3
20	0001 0100	14	RE	RES	(hex)	Restore
21	0001 0101	15	NL	NL	(hex)	New Line
22	0001 0110	16	BS	BS		Back Space
23	0001 0111	17	IL	IL	(hex)	Idle
24	0001 1000	18	CN	CAN		Cancel
25	0001 1001	19	EM	EM		End of Medium
26	0001 1010	1A	CC	CC	(hex)	Cursor Control
27	0001 1011	1B	C1	CU1	(hex)	
28	0001 1100	1C	FS	IFS	FS	Information File Separator
29	0001 1101	1D	GS	IGS	GS	Information Group Separator
30	0001 1110	1E	RS	IRS	RS	Information Record Separator
31	0001 1111	1F	US	IUS	US	Information Unit Separator
32	0010 0000	20	DS	DS	(hex)	Digit Select
33	0010 0001	21	SS	SOS	(hex)	Start of Significance
34	0010 0010	22	FS	FS	(hex)	Field Separator
35	0010 0011	23	(hex)			
36	0010 0100	24	BP	BYP	(hex)	Bypass
37	0010 0101	25	LF	LF		Line Feed
38	0010 0110	26	EB	ETB		End of Transmission Block
39	0010 0111	27	EC	ESC		Escape
40	0010 1000	28	(hex)			
41	0010 1001	29	(hex)			
42	0010 1010	2A	SM	SM	(hex)	Set Mode
43	0010 1011	2B	C2	CU2	(hex)	
44	0010 1100	2C	(hex)			

www.valuetronics.com

Table G-2. EBCDIC Character Conversion Table (Continued)

Dec Value	Binary	Hex	Displayed Character	Standard Mnemonic	Keyboard Entry If Other Than Standard	Description
45	0010 1101	2D	EQ	ENQ		Enquiry
46	0010 1110	2E	AK	ACK		Positive Acknowledge
47	0010 1111	2F	BL	BEL		Bell
48	0011 0000	30	(hex)			
49	0011 0001	31	(hex)			
50	0011 0010	32	SY	SYN		Synchronous Idle
51	0011 0011	33	(hex)			
52	0011 0100	34	PN	PN	(hex)	Punch On
53	0011 0101	35	RS	RS	(hex)	Reader Stop
54	0011 0110	36	UC	UC	(hex)	Upper Case
55	0011 0111	37	ET	EOT		End of Transmission
56	0011 1000	38	(hex)			
57	0011 1001	39	(hex)			
58	0011 1010	3A	(hex)			
59	0011 1011	3B	C3	CU3	(hex)	
60	0011 1100	3C	D4	DC4		Device Control 4
61	0011 1101	3D	NK	NAK		Negative Acknowledge
62	0011 1110	3E	(hex)			
63	0011 1111	3F	SB	SUB		Substitute
64	0100 0000	40	(space)			
65	0100 0001	41	(hex)			
66	0100 0010	42	(hex)			
67	0100 0011	43	(hex)			
68	0100 0100	44	(hex)			
69	0100 0101	45	(hex)			
70	0100 0110	46	(hex)			
71	0100 0111	47	(hex)			
72	0100 1000	48	(hex)			
73	0100 1001	49	(hex)			
74	0100 1010	4A	¢		[	
75	0100 1011	4B	.			
76	0100 1100	4C	<			
77	0100 1101	4D	(			
78	0100 1110	4E	+			
79	0100 1111	4F	!		]	
80	0101 0000	50	&			
81	0101 0001	51	(hex)			
82	0101 0010	52	(hex)			
83	0101 0011	53	(hex)			
84	0101 0100	54	(hex)			
85	0101 0101	55	(hex)			
86	0101 0110	56	(hex)			
87	0101 0111	57	(hex)			
88	0101 1000	58	(hex)			
89	0101 1001	59	(hex)			

www.valuetronics.com

Table G-2. EBCDIC Character Table G-2. Conversion Table (Continued)

Dec Value	Binary	Hex	Displayed Character	Standard Mnemonic	Keyboard Entry If Other Than Standard	Description
90	0101 1010	5A	!			
91	0101 1011	5B	$			
92	0101 1100	5C	*			
93	0101 1101	5D	)			
94	0101 1110	5E	;			
95	0101 1111	5F	¬		^	
96	0110 0000	60	-			
97	0110 0001	61	/			
98	0110 0010	62	(hex)			
99	0110 0011	63	(hex)			
100	0110 0100	64	(hex)			
101	0110 0101	65	(hex)			
102	0110 0110	66	(hex)			
103	0110 0111	67	(hex)			
104	0110 1000	68	(hex)			
105	0110 1001	69	(hex)			
106	0110 1010	6A	¦			
107	0110 1011	6B	,			
108	0110 1100	6C	%			
109	0110 1101	6D	_			
110	0110 1110	6E	>			
111	0110 1111	6F	?			
112	0111 0000	70	(hex)			
113	0111 0001	71	(hex)			
114	0111 0010	72	(hex)			
115	0111 0011	73	(hex)			
116	0111 0100	74	(hex)			
117	0111 0101	75	(hex)			
118	0111 0110	76	(hex)			
119	0111 0111	77	(hex)			
120	0111 1000	78	(hex)			
121	0111 1001	79	'			
122	0111 1010	7A	:			
123	0111 1011	7B	#			
124	0111 1100	7C	@			
125	0111 1101	7D	'			
126	0111 1110	7E	=			
127	0111 1111	7F	"			
128	1000 0000	80	(hex)			
129	1000 0001	81	a			
130	1000 0010	82	b			
131	1000 0011	83	c			
132	1000 0100	84	d			
133	1000 0101	85	e			
134	1000 0110	86	f			

www.valuetronics.com

Table G-2. EBCDIC Character Conversion Table (Continued)

Dec Value	Binary	Hex	Displayed Character	Standard Mnemonic	Keyboard Entry If Other Than Standard	Description
135	1000 0111	87	g			
136	1000 1000	88	h			
137	1000 1001	89	i			
138	1000 1010	8A	(hex)			
139	1000 1011	8B	(hex)			
140	1000 1100	8C	(hex)			
141	1000 1101	8D	(hex)			
142	1000 1110	8E	(hex)			
143	1000 1111	8F	(hex)			
144	1001 0000	90	(hex)			
145	1001 0001	91	j			
146	1001 0010	92	k			
147	1001 0011	93	l			
148	1001 0100	94	m			
149	1001 0101	95	n			
150	1001 0110	96	o			
151	1001 0111	97	p			
152	1001 1000	98	q			
153	1001 1001	99	r			
154	1001 1010	9A	(hex)			
155	1001 1011	9B	(hex)			
156	1001 1100	9C	(hex)			
157	1001 1101	9D	(hex)			
158	1001 1110	9E	(hex)			
159	1001 1111	9F	(hex)			
160	1010 0000	A0	(hex)			
161	1010 0001	A1	~			
162	1010 0010	A2	s			
163	1010 0011	A3	t			
164	1010 0100	A4	u			
165	1010 0101	A5	v			
166	1010 0110	A6	w			
167	1010 0111	A7	x			
168	1010 1000	A8	y			
169	1010 1001	A9	z			
170	1010 1010	AA	(hex)			
171	1010 1011	AB	(hex)			
172	1010 1100	AC	(hex)			
173	1010 1101	AD	(hex)			
174	1010 1110	AE	(hex)			
175	1010 1111	AF	(hex)			
176	1011 0000	B0	(hex)			
177	1011 0001	B1	(hex)			
178	1011 0010	B2	(hex)			
179	1011 0101	B3	(hex)			

www.valuetronics.com

Table G-2. EBCDIC Character Conversion Table (Continued)

Dec Value	Binary	Hex	Displayed Character	Standard Mnemonic	Keyboard Entry If Other Than Standard	Description
180	1011 0100	B4	(hex)			
181	1011 0101	B5	(hex)			
182	1011 0110	B6	(hex)			
183	1011 0111	B7	(hex)			
184	1011 1000	B8	(hex)			
185	1011 1001	B9	(hex)			
186	1011 1010	BA	(hex)			
187	1011 1011	BB	(hex)			
188	1011 1100	BC	(hex)			
189	1011 1101	BD	(hex)			
190	1011 1110	BE	(hex)			
191	1011 1111	BF	(hex)			
192	1100 0000	C0	{			
193	1100 0001	C1	A			
194	1100 0010	C2	B			
195	1100 0011	C3	C			
196	1100 0100	C4	D			
197	1100 0101	C5	E			
198	1100 0110	C6	F			
199	1100 0111	C7	G			
200	1100 1000	C8	H			
201	1100 1001	C9	I			
202	1100 1010	CA	(hex)			
203	1100 1011	CB	(hex)			
204	1100 1100	CC	⌠			
205	1100 1101	CD	(hex)			
206	1100 1110	CE	⌡			
207	1100 1111	CF	(hex)			
208	1101 0000	D0	}			
209	1101 0001	D1	J			
210	1101 0010	D2	K			
211	1101 0011	D3	L			
212	1101 0100	D4	M			
213	1101 0101	D5	N			
214	1101 0100	D6	O			
215	1101 0111	D7	P			
216	1101 1000	D8	Q			
217	1101 1001	D9	R			
218	1101 1010	DA	(hex)			
219	1101 1011	DB	(hex)			
220	1101 1100	DC	(hex)			
221	1101 1101	DD	(hex)			
222	1101 1110	DE	(hex)			
223	1101 1111	DF	(hex)			
224	1110 0000	E0	\			

*Use CNTL Key in conjunction with symbol.

www.valuetronics.com

Table G-2. EBCDIC Character Conversion Table (Continued)

Dec Value	Binary	Hex	Displayed Character	Standard Mnemonic	Keyboard Entry If Other Than Standard	Description
225	1110 0001	E1	(hex)			
226	1110 0010	E2	S			
227	1110 0011	E3	T			
228	1110 0100	E4	U			
229	1110 0101	E5	V			
230	1110 0110	E6	W			
231	1110 0111	E7	X			
232	1110 1000	E8	Y			
233	1110 1001	E9	Z			
234	1110 1010	EA	(hex)			
235	1110 1011	EB	(hex)			
236	1110 1100	EC	d			
237	1110 1101	ED	(hex)			
238	1110 1110	EE	(hex)			
239	1110 1111	EF	(hex)			
240	1111 0000	F0	0			
241	1111 0001	F1	1			
242	1111 0010	F2	2			
243	1111 0011	F3	3			
244	1111 0100	F4	4			
245	1111 0101	F5	5			
246	1111 0110	F6	6			
247	1111 0111	F7	7			
248	1111 1000	F8	8			
249	1111 1001	F9	9			
250	1111 1010	FA	|		/*	
251	1111 1011	FB	(hex)			
252	1111 1100	FC	(hex)			
253	1111 1101	FD	(hex)			
254	1111 1110	FE	(hex)			
255	1111 1111	FF	(hex)			

*Use CNTL Key in conjunction with symbol.

www.valuetronics.com

Table G-3. Baudot Character Conversion Table

Dec Value	Binary	Hex	Unshifted Characters (letters)	Shifted Characters (figures)
0	0 0000	00	NU	NU
1	0 0001	01	E	3
2	0 0010	02	LF	LF
3	0 0011	03	A	-
4	0 0100	04	(space)	(space)
5	0 0101	05	S	'
6	0 0110	06	I	8
7	0 0111	07	U	7
8	0 0100	08	CR	CR
9	0 1001	09	D	$
10	0 1010	0A	R	4
11	0 1011	0B	J	BL
12	0 1100	0C	N	,
13	0 1101	0D	F	!
14	0 1110	0E	C	:
15	0 1111	0F	K	(
16	1 0000	10	T	5
17	1 0001	11	Z	"
18	1 0010	12	L	)
19	1 0011	13	W	2
20	1 0100	14	H	#
21	1 0101	15	Y	6
22	1 0110	16	P	0
23	1 0111	17	Q	1
24	1 1000	18	O	9
25	1 1001	19	B	?
26	1 1010	1A	G	&
27	1 1011	1B (figs)	SO (shift out)	SO (shift out)
28	1 1100	1C	M	.
29	1 1101	1D	X	/
30	1 1110	1E	V	;
31	1 1111	1F (LTRS)	SI (shift in)	SI (shift in)

www.valuetronics.com

Table G-4. EBCD Character Conversion Table

Dec Value	Binary	Hex	Unshifted Characters	Shifted Characters
0	00 0000	00	(space)	(space)
1	00 0001	01	-	—
2	00 0010	02	@	(hex) (¢)
3	00 0011	03	&	+
4	00 0100	04	8	*
5	00 0101	05	q	Q
6	00 0110	06	y	Y
7	00 0111	07	h	H
8	00 1000	08	4	:
9	00 1001	09	m	M
10	00 1010	0A	u	U
11	00 1011	0B	d	D
12	00 1100	0C	(hex) (PN)	(hex) (PN)
13	00 1101	0D	(hex) (RES)	(hex) (RES)
14	00 1110	0E	(hex) (BYP)	(hex) (BYP)
15	00 1111	0F	(hex) (PF)	(hex) (PF)
16	01 0000	10	2	<
17	01 0001	11	k	K
18	01 0010	12	s	S
19	01 0011	13	b	B
20	01 0100	14	O	)
21	01 0101	15	VT	VT
22	01 0110	16	FF	FF
23	01 0111	17	(hex)	(hex)
24	01 1000	18	6	,
25	01 1001	19	o	O
26	01 1010	1A	w	W
27	01 1011	1B	f	F
28	01 1100	1C (UC)	SO (shift out)	SO (shift out)
29	01 1101	1D	BS	BS
30	01 1110	1E	EB	EB
31	01 1111	1F (LC)	SI (shift in)	SI (shift in)
32	10 0000	20	1	=
33	10 0001	21	j	J
34	10 0010	22	/	?
35	10 0011	23	a	A
36	10 0100	24	9	(
37	10 0101	25	r	R
38	10 0110	26	z	Z
39	10 0111	27	i	I
40	10 1000	28	5	%
41	10 1001	29	n	N
42	10 1010	2A	v	V
43	10 1011	2B	e	E

www.valuetronics.com

Table G-4. EBCD Character Conversion Table (Continued)

Dec Value	Binary	Hex	Unshifted Characters	Shifted Characters
44	10 1100	2C	RS	RS
45	10 1101	2D	CR	CR
46	10 1110	2E	LF	LF
47	10 1111	2F	HT	HT
48	11 0000	30	3	;
49	11 0001	31	l	L
50	11 0010	32	t	T
51	11 0011	33	c	C
52	11 0100	34	#	"
53	11 0101	35	$	!
54	11 0110	36	.	.
55	11 0111	37	.	.
56	11 1000	38	7	>
57	11 1001	39	p	P
58	11 1010	3A	x	X
59	11 1011	3B	g	G
60	11 1100	3C	ET	ET
61	11 1101	3D	(hex) (IL)	(hex) (IL)
62	11 1110	3E	ESC	ESC
63	11 1111	3F	(DEL)	(DEL)

www.valuetronics.com

Table G-5. Transcode Character Conversion Table

Dec Value	Binary	Hex	Displayed Characters	Keyboard Mnemonic
0	00 0000	00	SH	SOH
1	00 0001	01	A	
2	00 0010	02	B	
3	00 0011	03	C	
4	00 0100	04	D	
5	00 0101	05	E	
6	00 0110	06	F	
7	00 0111	07	G	
8	00 1000	08	H	
9	00 1001	09	I	
10	00 1010	0A	SX	STX
11	00 1011	0B	•	
12	00 1100	0C	<	
13	00 1101	0D	BL	BEL
14	00 1110	0E	SB	SUB
15	00 1111	0F	EB	ETB
16	01 0000	10	&	
17	01 0001	11	J	
18	01 0010	12	K	
19	01 0011	13	L	
20	01 0100	14	M	
21	01 0101	15	N	
22	01 0110	16	O	
23	01 0111	17	P	
24	01 1000	18	Q	
25	01 1001	19	R	
26	01 1010	1A	(space)	
27	01 1011	1B	$	
28	01 1100	1C	*	
29	01 1101	1D	US	US
30	01 1110	1E	ET	EOT
31	01 1111	1F	DL	DLE
32	10 0000	20	-	
33	10 0001	21	/	
34	10 0010	22	S	
35	10 0011	23	T	
36	10 0100	24	U	
37	10 0101	25	V	
38	10 0110	26	W	
39	10 0111	27	X	
40	10 1000	28	Y	
41	10 1001	29	Z	
42	10 1010	2A	EC	ESC
43	10 1011	2B	,	

www.valuetronics.com

Table G-5. Transcode Character Conversion Table (Continued)

Dec Value	Binary	Hex	Displayed Characters	Keyboard Mnemonic
44	10 1100	2C	%	
45	10 1101	2D	EQ	ENQ
46	10 1110	2E	EX	ETX
47	10 1111	2F	HT	HT
48	11 0000	30	0	
49	11 0001	31	1	
50	11 0010	32	2	
51	11 0011	33	3	
52	11 0100	34	4	
53	11 0101	35	5	
54	11 0110	36	6	
55	11 0111	37	7	
56	11 1000	38	8	
57	11 1001	39	9	
58	11 1010	3A	SY	SYN
59	11 1011	3B	#	
60	11 1100	3C	@	
61	11 1101	3D	NK	NAK
62	11 1110	3E	EM	EM
63	11 1111	3F		DEL

www.valuetronics.com

Table G-6. IPARS Character Conversion Table

Dec Value	Binary	Hex	Displayed Character	Keyboard Function
0	00 0000	00	(hex)	
1	00 0001	01	1	
2	00 0010	02	2	
3	00 0011	03	3	
4	00 0100	04	4	
5	00 0101	05	5	
6	00 0110	06	6	
7	00 0111	07	7	
8	00 1000	08	8	
9	00 1001	09	9	
10	00 1010	0A	0	
11	00 1011	0B	*	
12	00 1100	0C	CR	Return
13	00 1101	0D	EI	End of Medium, Incomplete
14	00 1110	0E	=	Sense

www.valuetronics.com

Table G-6. IPARS Character Conversion Table (Continued)

Dec Value	Binary	Hex	Displayed Character	Keyboard Function
15	00 1111	0F	(hex)	Go-Ahead
16	01 0000	10	(hex)	Write
17	01 0001	11	/	Erase/Write
18	01 0010	12	S	
19	01 0011	13	T	
20	01 0100	14	U	
21	01 0101	15	V	
22	01 0110	16	W	
23	01 0111	17	X	
24	01 1000	18	Y	
25	01 1001	19	Z	
26	01 1010	1A	¢	
27	01 1011	1B	#	
28	01 1100	1C	(space)	
29	01 1101	1D	EC	End of Medium, Complete
30	01 1110	1E	[	Start
31	01 1111	1F	.	
32	10 0000	20	@	
33	10 0001	21	J	
34	10 0010	22	K	
35	10 0011	23	L	
36	10 0100	24	M	
37	10 0101	25	N	
38	10 0110	26	O	
39	10 0111	27	P	
40	10 1000	28	Q	
41	10 1001	29	R	
42	10 1010	2A	:	UMSG
43	10 1011	2B	<	
44	10 1100	2C	+	
45	10 1101	2D	EU	End of Medium, Unsolicited
46	10 1110	2E	)	
47	10 1111	2F	'	
48	11 0000	30	$	
49	11 0001	31	A	
50	11 0010	32	B	
51	11 0011	33	C	
52	11 0100	34	D	
53	11 0101	35	E	
54	11 0110	36	F	
55	11 0111	37	G	
56	11 1000	38	H	
57	11 1001	39	I	
58	11 1010	3A	?	
59	11 1011	3B	.	
60	11 1100	3C	%	
61	11 1101	3D	EP	End of Medium, Push Button
62	11 1110	3E	S2	Sync 2
63	11 1111	3F	S1	Sync 1, Reset

Note: The SYN keycap maps to the Sync 2, hex 3E character.

www.valuetronics.com

www.valuetronics.com

Index

A

ac power source 1-2
Accessing - Setup Menu 3-2
Accessories B-6
  Available B-6
  Supplied B-6
Address 6-4
  Extended 6-4
  Field 6-4
Adjustments D-5
Align Pattern D-8
Applications 17-2
  Denied A-2
  Not Compatible A-2
Archiving 12-22
  RAM to Disc 12-22
ASCII 7 3-15, 7-13
arrow keys 1-6
ASCII
  Character Conversion Table G-2
  Control Characters 13-9
  Printer 13-2
  Printer Output 13-2
Asynchronous Terminal Emulator 14-2
Asynchronous Modems 11-12
Asynchronous Mode 10-9, 10-10
Auto Configure 1-12, 3-2, 3-8, 3-15, F-5
  Algorithm 2-3
  As a Starting Point 2-5
  BOPs 2-5
  BSC 2-6
  COPs 2-6
  Softkey 2-2
  Using Auto Configure 2-2
Auto Configure Error Messages
  Waiting for Data 2-6
  Waiting for Idles 2-6
  Waiting for Frames 2-7
  Waiting for Messages 2-7
  No Pod Attached 2-7
  Invalid Sync Characters 2-7
  Invalid Asynchronous Speed/Invalid Synchronous Speed 2-7
  Invalid Async Framing 2-7
  Can't Configure Within the Time Limit 2-7
Auto Configure Results 2-3
Auto Line Feed 14-5
Autostart Files 12-8

B

Bad Data - Cannot Sync 10-13, A-2
Bad disc A-2
Basic Rate 15-20
Baudot 3-15
Baudot Character Conversion Table G-11
Beep 4-7, 4-13
Bell Field 14-5
BERT 1-6, 8-5
  Menu 1-12, 13-5
  Results 13-5
BERT DCE 10-8
BERT Definitions
  PRBS 10-2
  Bit Error Rate 10-2
  Blocks 10-2
  Block Error Rate 10-2
  Block Sizes 10-2
BERT Menu Selections 10-4
BERT Menu Softkeys
  Pattern 10-3
  Block Size 10-3
  Duration 10-3
  Bits/Sec 10-3
  Framing 10-3
  Parity 10-3
Binary and Hex Characters 4-37, 5-10, 7-12
Bit
  Shifting (BSC/Char only) 4-16, 9-3
  Count 10-6
  Error Rate Testing (BERT) 1-6, 10-2, B-5
  Errors 10-6
  Order/Sense (Char) 3-13
  Oriented Lines 3-8
  Oriented Protocol Setup 3-5
  Oriented Protocols 2-5, 9-14, C-2
  Oriented Setup Definitions 3-4
  Shift 12-6
  Shifting 3-17, 12-3
Bits/Sec 10-3, 13-3, 14-5
Blinking Asterisk 2-2
Blinking Characters 4-11, 8-6, 9-10

www.valuetronics.com

Block 10-2
Check Characters (BCC) 7-12
Count 10-6
Error Rate 10-2
Errors 10-6
Block Size 10-2, 10-3
Blocks, Program 4-12
Branching
Conditional 4-21
From a Trigger 5-8
Unconditional 4-25
Break 14-7
BOP Menu Selections 3-5, 3-7
Breakout Box 1-10
BCC 3-16, 8-6
BSC and Auto Configure 2-6

BSC Setup Definitions
Definitions 3-9
Selections 3-10
Buf = n 8-7
Buffer
Loading 4-5
Data 4-5, 12-5
Empty A-3
Overflow 8-8, A-3

C

Capture
Data On 8-4
Memory B-3
First N Chars 8-5
Unknown Data 3-17
Caps Lock 14-7
Care Of Discs 12-16
Carriage Return Delay 13-3
Change Display 9-7
Changing Fuses D-3
Char
Menu 3-14
Set 1 D-9
Set 1 Test Pattern D-9
Set 2 D-10
Set 2 Test Pattern D-10
Setup 3-14
Setup Definitions 3-12
Setup Selections 3-13
Character
Code 13-3
Control 5-11
Decoding 9-3
Excluding 5-11
Flags and Frame Check 5-11
Frame Sizes vs Data Code 4-17
Framing B-4
Masking Out 5-11
Oriented Protocols (COPs) 2-6, 3-11, 3-19
Oriented Protocols BSC C-2
Parity 5-11
String 5-10, 7-12
Trigger 4-14, 5-9
Checksum Error A-3
Clear Screen 14-7
Clock 13-8
Slipped During Run 10-13, A-4
Speed Accuracy B-5
Collecting Data From the Line 4-5
Commenting 4-32
Programs 4-33, 10-3
Compatibility 3-23, 4-10, 7-8, 10-4, 10-7
Completion of a Test 13-5
Conditional Branching 4-21, 10-3
Configuring 3-8
Connect For Simulating 7-2
Connecting
Pod 1-4
Printer 16-2
Connectors 18-14
Printer & Remote 1-8
RS232C/V.24 1-10
Control
Extended 6-7
Characters 5-10, 7-11
In HDLC 2-5
Key 1-6, 7-11
Lead Hand Shaking 13-4
Interface -- SetLead 10-4
Controller 14-3
Configuration 11-11
Download 11-5, 11-6
Controlling Interface Leads -- SetLead 7-16
Conversion Error; Menus Reset A-4
Copy Disc Utility 12-20
Copying Discs 12-219
Cord - Power 1-2
Countable Events 4-19

www.valuetronics.com

Counter 4-20, 9-3, 9-5, 10-3, 12-5, B-4
Inc Ctr 4-7
Counting
Parity Errors 4-20
Positive Lead Changes 4-20
cross patching, breakout boxes 1-10
Cursor 1-6
Memory 9-4
Timing 4-18, 9-3, 9-13
Timing Limits 9-15

D

D bit 6-3, 6-8
Data
Buffer 4-5
Capturing 3-18
Code Field 14-4
Code Tables G-1
Codes B-3
Error - Sync Lost 10-13, A-4
Filter 4-8, 4-18, 8-3, 8-4
Link Interface C-2
Only 12-2
Packet Fields 6-9
Packets C-7
Rates 2-3, 3-2
Screen 10-5
Screen Definitions 10-6
Superfluous 3-17
Transfer 11-4
Transfer Rates (bps) B-3
Transmission Modes B-3
Data Filter Menu 13-5
Data Filter Menu Definitions 8-4
Data Filter Setup Menu 8-3
Data and State Format 4-15, 8-6, 9-8, 9-11
DCE BERT 10-8
Setup 10-9
DCE Only 8-6, 9-8, 9-11
Decoding 12-4
Characters 9-3
Packets In X.25 3-5
High Level Protocols 9-4
Decrementing Counters 4-20
Definitions
Bit Oriented Setup 3-4
BSC Setup 4-7
Char Oriented Setup 3-12
DEL 15-9
Delay 4-26
Output 10-4
Output -- Wait 10-4
Delaying
Characters or Leads 7-18
Output 4-26
Output -- Wait 7-18
Delete 12-5, 12-23
Application 11-10
Block 4-9, 4-12, 7-7
File 12-5
Line 4-9, 4-12, 7-7
Prg 5-10, 7-7
Deleting
Characters 4-12
Lines and Blocks 4-12
Directory
Dir 12-3, 12-23
Full A-5
Listing 15-8
Too Large A-6
Disc based analyzer 14-10
Disc Drive 1-6, 12-2, 12-16
Checks D-6
Cleaning 12-17
Disc
Format Check D-6
Full A-5
Not Formatted A-5
Out A-6
Read Error; Buffer Data Invalid A-6
Read/Write Check D-7
Removed During a Read Operation A-6
Sectors 12-15
STORAGE 3-3
Transportation 1-2
Disconnect Switches 1-10, 18-8, 18-10, 18-13, 18-21
Display B-4
Formats 3-8, 8-6, B-5
Functions Field 14-5
Message 4-33
Mode 5-4
Test D-8

www.valuetronics.com

Display Format
DTE 8-6
DCE 8-6
Two Line 8-6
Data and State 8-6
Packet 8-6
Frame 8-6
Display Bottom 14-7
Display Top 14-7
Displaying Data 8-6, 9-8
DLC Error 4-36, 7-19, A-7
Download 11-4
Application 11-5, 11-10
Data 11-6, 11-10
Menus 11-6, 11-10
Drive Error A-5
Drop Sync
Error Checking 3-13
Characters (Synchronous mode only) 3-13
DTE Only 8-6, 9-8, 9-10
Duplicate Trigger 5-6
Duration 10-3

E

EBCD Character Conversion Table G-12
EBCDIC Character Conversion Table G-5
EBCDIK F-4
Character Conversion Table F-13
ECB 12-2, 12-13
Echo Field 14-5
Edit Character String 7-12
Elapsed Seconds 10-6
Electromagnetic Capability B-2
Eliminating Superfluous Data 3-18
Eliminating Idles 3-18
Emulator, Terminal 1-5, 14-2
Specifications 14-3
Enable Keyboard 11-8
End Frame 4-37, 7-13
End of Data Segment 12-20, A-7
End of
Disc File 12-19, A-7
Valid Data 12-19, A-8
End Time 9-7
End-to-End Testing 10-14
Ending Remote Operations 11-3
ENQ/ACK Handshake 13-4, 14-11
EOF error A-7
Equipment Supplied 17-2
Error
Checking 3-16, 7-12, B-4
Trigger 4-14, 5-12
Error Messages A-1
Auto Configure 2-7
Monitor 4-36
Simulate 7-19
Examine Data 9-17
BERT 10-13
Remote 11-14
Print 13-10
Error-free Seconds 10-5, 10-6
Errored Seconds 10-6
Evaluate Data 1-14
Examine Data 1-12, 1-14, 12-1, 12-3, 12-5, F-4
Examine Data Menu 13-5
Examine Data Error Messages 9-17
No Data in Buffer 9-17
No displayable data in buffer 9-17
Disc Removed During Read 9-17
Disc Read Error 9-17
End of Valid Data 9-17
Start of Valid Data 9-17
No More Highlights 9-17
End of Disc File 9-17
End of Data Segment 9-18
Start of Data Segment 9-18
Examine Data Menu Features 9-3
Viewing Timers and Counters 9-3
Bit Shifting 9-3
Decoding Characters 9-3
Cursor Timing 9-3
Decoding High Level Protocols 9-4
Cursor Memory 9-4
Extended Memory Board 9-4
Examine Data Menu Softkeys 9-5
Hex/Text 9-5
Roll Up/Roll Down 9-5
Next Page/Prev Page 9-5
Timer/Cntr 9-5
Spec Block 9-5
Next Hilit 9-6
Next Segment/Prev Segment 9-6
Bit Shift 9-6
Start Time/End Time 9-6
Change Display 9-7
Print Summary/Data

www.valuetronics.com

Examples
1: Measuring a Single RTS-CTS Delay 16-2
2: Monitoring a DCE 13-3
3: Monitoring a DTE 16-3
4: FOX Message 16-5
5: Counting Parity Errors 16-6
6: Measuring Many RTS-CTS Delays 16-8
7: Simulating RTS-CTS Delay 16-10
8: Loopback 16-12
9: END-TO-END (Transmit First) 16-14
10: END-TO-END (Receive First) 16-16
Counting Errors 7-14
Excluding Characters 5-11
Execute 17-7
Execute Run 11-8
Execute Key 12-4, 12-5, 12-6, 12-9, 14-7
Executing 4-12
Monitor Programs -- The Run Menu 4-12
Exit Key 10-5
Exploding Diamond (< >) 8-8
ETX
Addr (HDLC) 3-4
Ctrl (HDLC) 3-4
Video 1-8
EXT 3-16
Extended
Address 3-5, 6-7
Address and Control In HDLC 3-5
Addressing 6-4
Asynchronous Baud Rates 3-22
Capture Buffer 12-2, 12-13
Control 3-5, 6-7
Memory Board (Option 002) 9-4, 12-2, 12-11
Menus Only 12-2
Tests D-11
External Video Output E-1

F

F=Final C-4
Failed Error Check 8-6
Fan 1-8
FCS 8-6
Features - Major 1-5
Filtering 4-28
Flags 7-13
Check Characters 5-11, 7-13
Frame Check Characters 5-11, 7-13
Format 12-4, 12-5, 12-24
Frame 8-3
Frame
Bits 8-4
Check Characters 10-8
Display Format 8-6
Only 8-6
Type 6-5
Framing 3-17, 10-3
Framing error 8-6, A-9
Frequency 1-2
Front Panel 1-7
Full Breakout Box 18-8
Full Duplex Data 8-6
Fuse Holder 1-8

G

Getting Started Guide 1-2
GFI 6-3
GFI Field 6-7, 6-8
Gosub Block 4-8, 7-6
Goto Block 4-8, 7-6
Grounding Requirements 1-2

H

Half Duplex Data 8-6
Handling Of Discs 12-16
Handshake 13-3
Error A-9
Field 14-5
Handshaking Requirements 7-10
Hardware Handshake 14-11
HDLC Setup 3-6
Hex 4-37, 12-5
Hex Entry 14-7
Hex/Text 8-7, 9-5
Hexadecimal
Characters 13-8
Entry and Parity 3-14, 3-15
Equivalent 5-10
Highlight 4-8, 4-13, 4-15, 7-6, B-4
Hookup 4-3
Hookup - Printer 13-2
HP 18160A (V.35 and RS 232C Interface) 15-2, 1
3, 15-15, 15-17, B-9

www.valuetronics.com

HP 18174A (RS-449/422A/423A) 15-3, 15-12, B-9
HP 18177A/G Interface (V.35 Interface) 15-3, 15-14, B-9
HP 18179A (RS-232C/V.24) 1-11, 15-5, 15-21, B-9
HP 18180A (RS-232/V.24 and RS-449/422A/423A) 15-2, 15-3, 15-8, B-9
HP 18260A (RS-232/V.24 and X.21) 15-2, 15-10, B-9
HP 18268A ISDN Software 15-20
HP 18270A ISDN Interface Module 15-20

I

I-Frame Fields 6-5
ID Slave 11-8
Identify slave 14-2
Idles 2-7, 3-18, 7-12
If 4-7, 7-5
  Counter 4-22
  Lead 4-21
Improper Format A-10
Inc Cntr by n 4-7, 7-5
Initial Inspection 1-2
Inject 10 Errors 10-7
Inject Error 10-7
Insert Block 4-9, 7-7
Insert Line 4-8, 7-7
Inserting
  Characters 4-12
  Blocks 4-12
  Discs 12-18
  Lines and Blocks 4-12
Instrument Connector 1-10, 18-9
Instrument Hook-up 1-13
Interface
  Accessories B-9
  Pod 1-8, 15-2
  Pod Installation 15-4
Inv Video D-10
Invalid
  File Name A-10
  File Type A-10
  Invalid Mon/Sim Menu 6-31, 8-8, A-10
Invalid Sync Characters 2-7, A-11
IPARS 2-3
  Character Conversion Table G-16
  Setup 3-19
ISDN Interface Module 15-20
Isochronous Mode 10-9, 10-12
Issue ID Request to Enable Slave A-11

J

JIS Option F-1
JIS-7 F-3
JIS-8 F-3
Jumper Pins 18-8, 18-10, 18-13, 18-21

K

Keyboard 1-6, B-4
  Test D-8

L

LAPD 15-20
Latching Relays 18-7
LCD Indicators 18-11, 18-14
LCGN Field 6-8
LCN 6-3
  Field 6-7, 6-8
Lead
  Changes 8-4, 9-13
  Control 7-16, 14-10
  Handshake 7-3
  Levels 13-9
  Status 7-16, B-4
  Trigger 4-14, 4-21, 5-12
LEDs 1-10, 18-7, 18-14, 18-20
Level 2 6-2
  and 3 Assisted Mode 5-11, 7-14
  Softkeys 6-4
Level 3 6-2, C-6
  Softkeys 6-7
Line
  Data 4-5
  Switch 1-8
  Terminators 13-3
  Voltage Selection 1-2, D-3
Line Forcing, breakout box 1-10
Load 12-4
  Buffer 9-2
  Load From Disc 12-7
  Load Files Larger than Buffer 12-7
Lock Keyboard 11-3

www.valuetronics.com

Lockout Slave's Keyboard 11-3
Loop Tests D-5
Loopback Testing 10-15

M

Major Features 1-5
Manual Flow Control 14-11
Masking Characters 5-11
Mark/Space Indicator 1-10, 18-8, 18-11, 18-14, 18-21
Marking Triggers 4-15
  Beep and Highlight 4-15
Mass Storage 15-1, B-3
Mass Store 1-12
  Device 12-3
  Menu 12-3, 13-5
Max Length 4-36, A-11
Max Strings 4-36, A-12
Maximum Count 4-19
Maximum Cursor Time 12-17
Measuring Time 4-16, 6-9, 10-3
Media Wear Protected A-12
Memory Blocks 12-15
Menu & Data 12-8, 12-9, 12-14
Menu - Top Level 1-12
Menu Full 4-36, A-12
Menus Incompatible with HP 4952A A-12
Menus Only 12-2
Message 4-8, 4-33, 7-6
Message Statements 4-10, 4-32
Microfloppy Disc Drive 1-5
Mod 6-8
Mode Field 14-5
Modem
  Handshaking 11-12
  Operations 11-12
  String 11-12
Modified Error Check (MEC) 3-21
Mon Menu 1-12, 4-6
Monitor Error Messages 4-36
  Max Length 4-36
  Max Strings 4-36
  Menu Full 4-36
  Invalid Mon/Sim Menu 4-36
  No File; Run Aborted 4-36
  File Already Exists 4-36
  DLC Error 4-36
Monitor Status Messages
  Text 4-37
  Not Text 4-37
  Hex 4-37
  Not Hex 4-37
  Binary 4-37
  End Frame 4-37
  Start Flag 4-37
Monitor Menu 4-6, 13-5, F-3
Monitor Menu Softkey Commands 4-7
Monitor
  Line 4-2, 8-2
  Buffer 4-2, 8-2
  Programs 5-12
Monitoring 1-5
  Buffer 4-2, 4-5
  Line 4-2, 4-3
Monosync Mode 11-4
MORE key 1-6, 1-12, 4-11, 4-32
Move Cursor 4-9, 4-11, 7-7
Multiple Triggers 5-5
MSD=Disc 12-2, 12-3, 12-11
MSD=RAM 12-2, 12-3, 12-11

N

N(R) 6-5
N(S) 6-5
NAK 5-9
Next Page 9-5
Next Hilit 9-5
Next Segment 9-4, 9-5, 9-6
No Application Loaded A-13
No Data in Buffer 12-19
No Data in Capture Buffer A-13
No Data Present 10-13, A-14
No File 6-31, A-14
No Idles A-14
No More Highlights 12-19, A-16
No Pod Attached 3-7, 8-8, A-15
No Sync Characters A-15
Non LIF format A-15
Nonstandard
  Baud Rate A-15
  Protocols 3-19
NONVOLATILE MEMORY 3-3
Not Text 4-37
NRZI 2-3, 12-9

www.valuetronics.com

O

Off - Turning the HP 4952A Off 1-4
On - Turning the HP 4952A 1-4
Operating Characteristics B-3
Option 002 12-4
Optional Memory Board 15-7
Options B-8
ORing Triggers 5-5
Original Packaging D-11
OSI Level 2 and 3 Tables C-1
Other Packaging D-11
Other Packet Types 8-9
Other Tests 13-11
Output
  Printer 1-6
  EXT Video 1-8
Overlapping Triggers 5-6

P

P/F 6-3
P=Poll C-4
Pack Disc 12-5, 12-24
Packaging D-11
Packet Construction (MODULO 8) C-6
Packet Display Format 8-6, 9-8, 9-12
Packet-Type Field 6-7, 6-9
Panel
  Front 1-6
  Rear 1-8
Parity 4-12, 5-6, 8-6, 10-3, 13-3, B-4
  Bits 7-13
  Field 14-5
Pattern 13-3
Pause, Program 4-26
Performance Verification D-5
Pod 1-10
  Cable 1-10
  Connecting 1-4
  Hookup 1-13
  Interface 15-2
  Installation 15-4
Poll/Final bits 6-4
Post-processing 4-5
Power Cable D-2
  Part Numbers D-4
Power
  Cord 1-2
  Requirements D-2
Power Up and Power Down 1-4
PRBS 10-2
Prev Page 9-4, 9-5
Prev Segment 9-4, 9-5, 9-6
Prg = n 8-7
Print
  Data 9-7
  Dir 12-6, 12-24
  ECB 13-7
  Prog 4-9, 7-7
  Summary 9-7
  Output 13-6
  RAM 12-14
Print Error Messages 13-10
  Handshake Error 13-10
  Printer Error 13-10
  Remote Timeout 13-10
Print Keys
  Setup Menu 13-6
  Monitor Menu 13-6
  Simulate Menu 13-6
  Data Filter Menu 13-6
  BERT Menu 13-6
  BERT Results 13-6
  Remote Menu 13-6
  Mass Store Menu 13-6
Printer
  Display 13-8
  Output 1-6, 13-6
  Error 16-6, A-16
  Hookup 13-2
  Setup 13-3
Problem Solving Accessories B-7
Program Blocks 4-12
Program Pauses 4-26
Programmability 5-2
Prompt 4-33
Protocol 3-2, B-3
  Unusual Settings 3-19
Pseudo Random Bit Sequence 10-2

Q

Q.921/Q.931 15-20
Q and D bit 6-3
Quick Brown Fox Tests 10-16

www.valuetronics.com

R

RAM Disc 12-12
Rear Panel 1-8, 1-9
Receive
First 19-14
COPs 12-15
Receiver Overrun 8-8, A-16
Record not found A-17
Recover 12-5
Reference Trigger 4-13, 4-28
Following a Trigger 5-3
REJ Packet 6-9
Start of Execution 5-2
Stop Execution 5-3
Remote & Print 1-12
Remote
BERT 11-10
Capability B-5
Data Transfer 11-4
Menu 11-11, 13-5
Operations 11-3
Restrictions 11-3
Setup 11-2
Testing 1-5
Timeout 11-4, A-17
Remote Controller Softkeys 11-9
ID Slave 11-9
Slave Status 11-9
Execute Run 11-9
Reset Slave 11-9
Timers and Counter 11-9
Lock Keyboard 11-9
Enable Keyboard 11-9
Run Application 11-10
Download Application 11-10
Upload Application 11-10
Download Menu 11-10
Delete Application 11-10
Download Data 11-10
Upload Data 11-10
Remote BERT 11-10
Remote Controller Configuration 11-11
Remote Data Transfer 11-4
Remote Operations 11-3
Resetting to Top Level 11-3
Lockout Slave's Keyboard 11-3
Ending Remote Operations 11-3
Remote Restrictions 11-3
Data Transfer 11-4
Remote Slave Configuration 11-11
Remote Status Messages 11-14
Application Cannot Be Run on 4952 11-14
Application Already Loaded 11-14
Invalid Application for 4952 11-14
Menus Incompatible with 4952 11-14
Must Reset Slave First 11-14
No Data in Buffer 11-14
No Application Resident 11-14
Reset Slave and Retry Operation 11-14
Remote/Printer 1-8
Removing a Disc 12-18
Rename 12-6
Requirements 13-7
Grounding 1-2
Reset 1-5, 1-12, 4-8, 7-6
Application 1-5
Menus 1-5
Slave 11-3, 11-9
Timer 4-17
Resetting Counters 4-20
Resetting To Top Level 11-3
Restoring 12-23
Return 4-8, 6-29, 7-7
RNR Packet 6-9
Roll Up and Roll Down 9-5, 12-11
RR Packet 6-9
RS-232/V.24 15-2
Connectors 1-10
Interfaces 15-2
Pod Configuration - Monitor Mode 15-17
Pod Configuration - Simulating a DCE 15-18
Pod Configuration - Simulating a DTE 15-18
RS-449 Interfaces 15-3
Rules For Hexadecimal Entry and Parity 3-15
Run Application 11-8
Run Menu 1-12, 8-2, 13-5, F-4
Executing 5-13
Run Menu Softkeys 8-2
Monitor Line 8-2
Monitor Buffer 8-2
Simulate 8-3
Data Filter 8-3

www.valuetronics.com

Run-Time Messages 8-7
Hex/Text 8-7
Stop Display/Start Display 8-7
Buf = n 8-7
Prg = n 8-7
Summary/Data Display 8-7
Exploding Diamond 8-8
No Pod Attached 8-8
Buffer Overflow 8-8
Receiver Overrun 8-8
Invalid Monitor/Simulate Menu 8-8
Running a BERT Test 10-5

S

S-Frame Fields 6-5
Saving Setups 3-3
SDLC Setup 3-6
Seek Error A-17
Selecting Levl3 Before Levl2 6-7
Selection - Line Voltage 1-2
Selections
BOP Menu 3-7
BSC 3-10
Char Menu 3-13
Self Test 1-12
Send 5-8, 7-9
Strings 9-13, B-5
'When' Strings 6-2
Sending Characters 7-9, 7-10
Sending Idles 7-12
Sequencing Triggers 5-6
Service Information D-1
Set Lead 5-9, 7-6, 7-9
Set Up 1-12
Setting Leads 6-2, 7-6
Setup 2-2, 3-2, 4-4, 5-5
Printer 13-3
Definitions - Bit Oriented 4-5
Menu 1-14, 2-3, 13-5, F-2
Softkey 3-2
Setup Summary 10-5
Setup=Simulate 14-6
Shifted JIS-7 F-8
Shipment 1-2
Shutter 15-3
Sim Menu 1-12
Simulate Menu 8-2, 13-5, 14-6
Simulate Error Messages
Max Length 7-19
Max Strings 7-19
Menu Full 7-19
Invalid Mon/Sim Menu 7-19
No File; Run Aborted 7-19
File Already Exists 7-19
DLC Error 7-19
Simulate Functions
Send 7-9
Set Lead 7-9
Wait 7-9
Simulate Softkeys 7-5
Start 7-5
Stop 7-5
Inc Ctr 7-5
If 7-5
When Trig 7-5
Send 7-5
Highlight 7-6
Beep 7-6
Reset 7-6
Goto Blk 7-6
Set Lead 7-6
Wait 7-6
Message 7-6
Gosub Block 7-6
Return 7-7
Insert Line 7-7
Insert Block 7-7
Delete Line 7-7
Delete Block 7-7
Delete Prg 7-7
Print Prog 7-7
Move Crsr 7-7
Simulate Status Messages
Text 7-20
Not Text 7-20
Hex 7-20
Not Hex 7-20
Binary 7-20
End Frame 7-20
Start Flag 7-20
Functions 10-4
Menu 9-5
Simulating 1-5
Connecting 7-2
Measurements 10-1
Requirements 9-4

www.valuetronics.com

Single Sided Disc A-17
Skip the First N Chars 8-5
Slave
Configuration 11-11
ID 11-9
Status 11-9
Slave Upload 11-7
Application 11-8
Data 11-8
Menu 11-8
Softkey Programming 4-11
Software Handshake 14-11
Softkey Trigger 4-14, 5-15
Source Pins 1-10
Special Characters 13-9
Specifications 17-3
Specify Block 9-5
Speed 2-7
Stamps - Time 4-18
Start 4-29
Start Time 9-3, 9-7
Start and Stop Timer 4-28
Start
Flag 4-37, 5-11, 9-14
Flag Time Stamp 12-16
Data Segment 12-20
Valid Data 12-19, A-18
Timer 4-7
Disc 4-7, 4-29
Display 4-7
Start of Execution 5-2
Start/Stop Display 4-28
Startup Tests 10-16
Stop 7-5
Stop Execution 5-3
Stop Time 9-3
Stop
Disc 4-7, 4-29
Display/Start Display 4-7, 8-7
Tests 4-7, 4-17, 4-31
Timer 4-17
Store 12-4, 12-9
Storing To Disc 12-9
Directly from Line 12-10
From ECB 12-14
Strings 10-7
STX 3-16
Subprograms 4-34, 10-4
Gosub Block and Return 4-34
Summary/Data Display 8-7
Summary Softkey 2-2
Superfluous Data 4-17
Suppress character 3-9
Switch
Disconnect 1-10
Line 1-8
Sync Characters 3-15
Invalid 2-7
Lost 13-8
Lost one or more times 10-13, A-18
On (BSC) 3-15
Synchronization 13-7
Synchronous Mode 10-9, 10-11

T

Tape To Disc File Transfer 11-13
Temperature B-2
Terminal
Emulation 1-5, 14-2
Operation 14-8
Setup 14-4
Testing
Bit Error Rate (BERT) 1-6
Remote 1-5
Text 4-37, 12-5
Three-state activity 1-10
Time
Interval 12-7
Limit 2-7
Stamps 4-18, 8-4, 9-14
Timer and Counter 4-26, 9-5, 11-8
Timers 4-16, 5-14, 7-15, 9-3, 9-5, B-4
Timing
Information 4-18, 8-4, 9-13, 9-16
Resolution 9-14
Top Level Menu 1-12
Track 15-9
Transcode Character Conversion Table G-14
Transmit
Characters -- Send 7-10
First 19-12
Transmitted COPs 12-15
Transmitting Characters -- Send 7-10
Transparent Text (Char) 3-12
Transportation Disc 1-2, 15-3, 15-3
Trigger Events 5-2

www.valuetronics.com

Triggering 4-13
On Errors 4-14, 5-2
On Leads 4-14, 5-2
On Softkeys 4-14, 5-2
On Timers 4-14, 5-2
Triggering on Characters
Binary 5-9
Control 5-9
Don't Care 5-10
Hex 5-9
Not 5-10
Text 5-9
Triggers 4-13, B-4
Types 4-14
Multiple 5-5
Overlapping 5-5
Sequencing 5-6
Trigger Types 4-14, 5-4
Two Line Format 8-6, 9-8, 9-9
Types Of BOP Frames C-3
Types of Triggers 4-14

U

U-frame 6-6
Unconditional Branching 4-25
Unknown Data - Capturing 3-17
Unnumbered Format
Commands (P = Poll, F = Final) C-4
Format Responses C-4
Unusual Protocol Settings 3-19
Upload to Controller 1-4
Application 11-8
Data 11-8
Usage E-2
Using a Delay Repeatedly 4-35
Using the JIS Option F-2
Using the HP 4952A 1-13
Using the Setup Menu 3-2
Using Timers With Send 7-15
Utility Disc 12-20

V

V.35 Interfaces 15-3
V.35 Pod Configuration
Monitor Mode 15-19
Simulating a DCE 15-19
Value for N 11-5
Video
EXT 1-6, 1-8
Monitors E-2
Output 1-6
Pattern D-10
Viewing the Buffer 9-2, 9-3
Viewing Timers and Counters 9-3
VT-100 Terminal Emulation 14-9

W

Wait 4-27, 7-9, 7-18
Waiting
For Data 2-6, A-18
For Idles 2-6, A-18
Weight B-2
When Trig 4-7
Softkey Triggers 4-11
Statement 4-13, 5-2
Wraparound 11-8
Write
Protected A-19
Protecting a Disc 12-19

X

X.21 3-5, 12-9
X.21 Portion 15-11
X.25 Packet Switched Network 11-13
X.25 Setup 3-6, 15-20
X.75 3-21
XOn/XOff Hand Shaking 13-4

Y

Y-cable 1-10, 1-13, 4-3, 7-2

Z

Zero Bit Insertion 3-5, 3-11, 7-14
Zero Bit Extraction 3-5, 3-11

www.valuetronics.com